Bath/Circulators Accessories

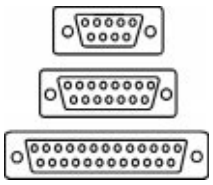

Remote Tether Cables

These cables can be used to extend the distance between the remote controller and the base unit on our bath microprocessor controllers. Available in two lengths, 5' and 10'.

For Models

RTE and EX Series Bath/Circulators with microprocessor controllers



Flowthru Coolers - FTC350

With a NESLAB Flowthru Cooler you have the versatility of operating your Heating Bath/Circulator at or below ambient temperatures. These cooling systems have a built-in refrigerated flow through heat exchanger. Simply connect tubing from the bath pump to the Flowthru Cooler.

Specifications

Cooling capacity	450 Watts	373 Watts, 50Hz	
Dimensions	14 x $8^{3/4}$ x 12 in	35.8 x 22.2 x 30.5 cm	
Power	115V, 60 Hz, 5A	220-240, 50Hz, 3A	
Shipping weight	30Lbs/14 Kgs		
Low temperatures achievable for:	7 Liters	12 Liters	22Liters
	-10°C (50 min.)	-10°C(80 min.)	-10°C (140 min.)

For Models

EX and GP Series Baths

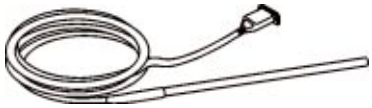

Remote Sensor

When circulating externally, the remote sensor allows the user to monitor the fluid temperature at a remote location. Your setpoint will be maintained automatically by the circulator at your application. Standard probe is stainless steel and is 3/16" in diameter and 6" in length with a 6' lead. Custom sizes available.

For Models

RTE and EX Series Bath/Circulators with digital and microprocessor controllers



NEScom

NEScom allows you to use your computer to fully automate the temperature control process of your Bath, Circulator, or Chiller. Temperature ramping, status monitoring with alarms, graphing, and recording are a few of the features of NEScom Windows 95 based software

For Models

RTE and EX Bath/Circulators with digital and microprocessor controllers, HX Series chillers with TC-400 controllers



Sealed Cover

For low temperature applications where moisture build up in the fluid must be minimized. Also useful when the circulator may be moved frequently. Easily installs onto the bath area and includes a nitrogen purge port.

For Models

RTE/EX-111 and RTE-140

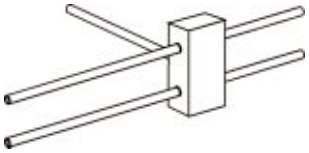

Leveling Device

The NESLAB Leveling Device is used to maintain a constant fluid level in an open container. The leveling device allows consistent force and suction of fluid flow while eliminating the risk of overflow.

For Models

RTE, EX, and GP Series Bath/Circulators

see page 44 for more accessories.

CFC-FREE
CB-60/CB-80 Cryobath
Low Temperature Bath

Thermo NESLAB Manual P/N U00551
Rev. 04/03/00

Instruction and Operation Manual

CB-60/CB-80 Cryobath Low Temperature
Table of Contents

PREFACE

Compliance 2
Unpacking 2
NES-care 2
Warranty 2
After-sale Support 2

SECTION I
Safety

Warnings 3

SECTION II
General Information

Description 4
Specifications 4

SECTION III
Installation

Site 5
Electrical Requirements 5
Fluids 5
Filling Requirements 5
Bath Parts 6
Mounting Brackets 6

SECTION IV
Operation

Start Up 8
Temperature Adjustment 8
Stirring 9

SECTION V
Maintenance and Service

Service Contracts 10
Cleaning 10
Cooling Fluid 10

SECTION VI
Troubleshooting

Checklist 11
Service Assistance 11
Technical Assistance 11

SECTION VIII
Warranty 12

Preface

Compliance

Products tested and found to be in compliance with the requirements defined in the EMC standards defined by 89/336/EEC as well as Low Voltage Directive (LVD) 73/23/EEC can be identified by the CE label on the rear of the unit. The testing has demonstrated compliance with the following directives:

LVD, 73/23/EEC	Complies with UL 3101-1:93
EMC, 89/336/EEC	EN 55011, Class A Verification
	EN 50082-1:1992
	IEC 1000-4-2:1995
	IEC 1000-4-3:1994
	IEC 1000-4-4:1995

For any additional information refer to the Letter of Compliance that shipped with the unit (Declaration of Conformity).

Unpacking

Retain all cartons and packing material until the unit is operated and found to be in good condition. If the unit shows external or internal damage, or does not operate properly, contact the transportation company and file a damage claim. Under ICC regulations, this is your responsibility.

Warranty

Units have a warranty against defective parts and workmanship for one full year from date of shipment. See back page for more details.

NES-care Extended Warranty Contract

- Extend parts and labor coverage for an additional year.
- Worry-free operation.
- Control service costs.
- Eliminate the need to generate repair orders.
- No unexpected repair costs.

Other contract options are available. Please contact Thermo NESLAB for more information.

After-sale Support

Thermo NESLAB is committed to customer service during and after the sale. If you have questions concerning the operation of your unit, contact our Sales Department. If your unit fails to operate properly, or if you have questions concerning spare parts or Service Contracts, contact our Service Department.

Before calling, please obtain the following information from the unit's serial number label:

- BOM number _____

- Serial number _____

Section I Safety

Warnings

Make sure you read and understand all instructions and safety precautions listed in this manual before installing or operating your unit. If you have any questions concerning the operation of your unit or the information in this manual, contact our Sales Department.

Performance of installation, operation, or maintenance procedures other than those described in this manual may result in a hazardous situation and may void the manufacturer's warranty.

Transport the unit with care. Sudden jolts or drops can damage the refrigeration lines.

Observe all warning labels.

Never remove warning labels.

Never operate damaged or leaking equipment.

Always turn off the unit and disconnect the line cord from the power source before performing any service or maintenance procedures, or before moving the unit.

Always empty the bath before moving the unit.

Never operate equipment with damaged line cords.

Never operate the unit without fluid in the bath.

Refer service and repairs to a qualified technician.

In addition to the safety warnings listed above, warnings are posted throughout the manual. These warnings are designated by an exclamation mark inside an equilateral triangle with text highlighted in bold print. Read and follow these important instructions. Failure to observe these instructions can result in permanent damage to the unit, significant property damage, or personal injury or death.

Section II General Information

Description

The CB-60/CB-80 Cryobath low temperature baths are designed to be an all purpose cold bath providing continuous operation at temperatures as low as -50°C (-80°C for the CB-80). Temperature stability of ±0.5°C can be obtained by using the optional Cryotrol Temperature Controller.

Each unit consists of an air-cooled refrigeration system, a magnetic stirring mechanism, a stainless steel bath, bath parts, a gasketed PVC bath cover, and stainless steel brackets for mounting auxiliary equipment.

Specifications

	CB-60	CB-80
Lowest Temperature[1]	-50°C	-80°C
Temperature Stability[2]	±0.5°C	±0.5°C
Cooling Capacity[3]		
60Hz	75 Watts @ -30°C	120 Watts @ -50°C
50Hz	60 Watts @ -30°C	100 Watts @ -50°C
Bath Work Area (Diameter x Depth)		
Inches	6 ½ x 6	7 ¾ x 7 ¾
Centimeters	16.5 x 15.2	19.7 x 19.7
Bath Volume		
Gallons	1.0	2.0
Liters	3.8	7.6
Unit Dimensions (H x W x D)		
Inches	19¾ x 11¾ x 13¾	40 x 16 x 22½
Centimeters	50.2 x 29.8 x 34.9	101.6 x 40.6 x 57.2
Shipping Weight		
Pounds	75	176
Kilograms	34	80

1. Under no heat load. Temperatures will vary with use of magnetic stirrer.
2. Using optional Cryotrol Temperature Controller.
3. Operating using bath fluid with specific heat of 0.5.

Section III Installation

Site

Locate the unit on a sturdy table or bench top. Ambient temperatures should be within the range of +55°F to +95°F (+13°C to +35°C).



Never place the unit in a location where excessive heat, moisture, or corrosive materials are present.

The unit has an air-cooled refrigeration system. Air is drawn through front of the unit and discharged through the rear. The unit must be positioned so the air intake and discharge are not impeded. A minimum clearance of 12 inches (30 centimeters) on the front and rear of the unit is necessary for adequate ventilation. Inadequate ventilation will cause a reduction in cooling capacity and, in extreme cases, compressor failure.

Excessively dusty areas should be avoided and a periodic cleaning schedule should be instituted (see Section VI, Cleaning).

The unit will retain its full rated capacity in ambient temperatures to approximately +75°F (+24°C). Above +75°F, reduce the cooling capacity 1% for every 1°F above +75°F, to a maximum ambient temperature of +95°F. In °C, reduce the cooling capacity 1% for every 0.5°C above +24°C, to a maximum ambient temperature of +35°C.

Electrical Requirements



The unit construction provides extra protection against the risk of electrical shock by grounding appropriate metal parts. The extra protection may not function unless the power cord in connected to a properly grounded outlet. It is the user's responsibility to assure a proper ground connection is provided.

Refer to the serial number label on the rear of the unit to identify the specific electrical requirements of your unit.

Make sure the voltage of the power source meets the specified voltage, ±10%.

Fluids



Never use flammable or corrosive fluids with this unit.

A non-freezing fluid is required.

The selected fluid must have a viscosity of 50 centistokes or less at the lowest operating temperature.

Filling Requirements

Fill the bath to within 1 inch of the top.

Bath Parts

The bath parts are the glass plate, spin bar, and stainless steel baffle that are included with the unit. The installation of the bath parts is necessary for proper operation.

Place the glass plate in the bottom of the bath. The glass plate prevents the spin bar from wearing a hole in the bottom of the bath.

Set the spin bar on the glass plate and the stainless steel baffle over the spin bar and coils. The feet of the baffle should rest on the bottom of the bath.

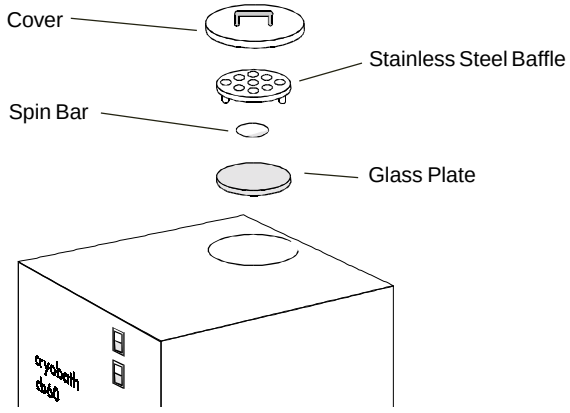

Replacement bath parts are available from Thermo NESLAB. Contact our Sales Department for more information (see Preface, After-Sale Support).

Mounting Brackets

The unit is equipped with two stainless steel mounting brackets (not installed) that are designed to allow auxiliary equipment to be mounted on the unit. Installation of the mounting brackets is optional.

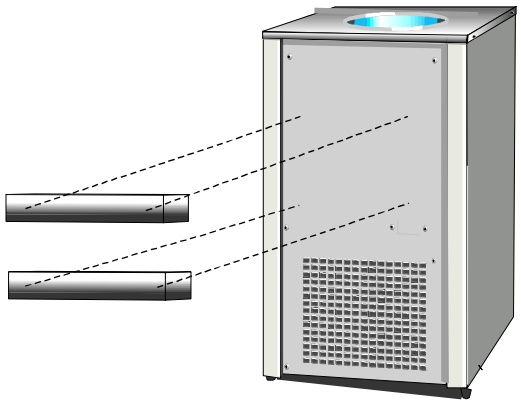

CB-60

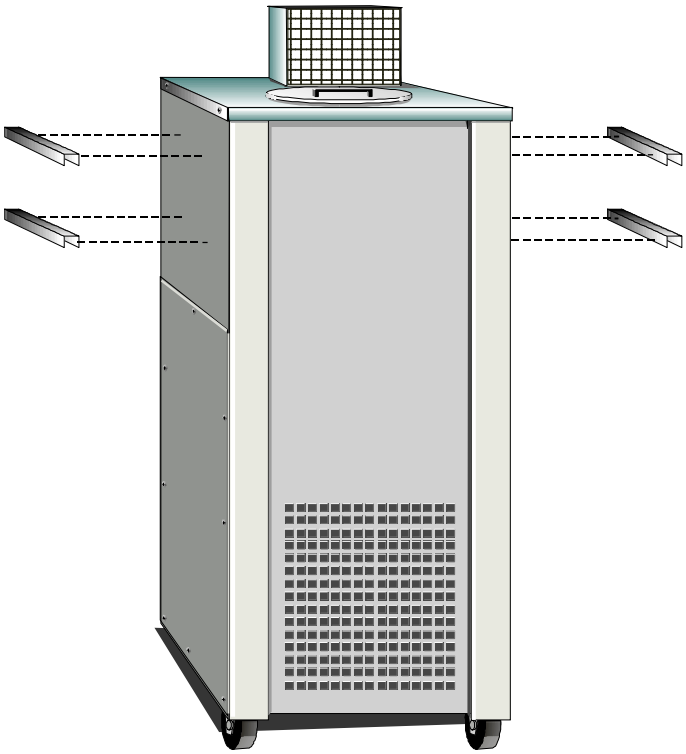

CB-80

Locate the four screws on the unit. The CB-60 screws are on the rear of the unit, for the CB-80 they are on the sides. Remove the screws. Align the holes in the brackets with the screw holes in the unit. Secure the brackets using the original screws.

Section IV Operation

Start Up

Before starting the unit, double check all electrical connections and make sure the bath has been properly filled with cooling fluid.

All the functions of the unit are governed by front panel controls. The upper COOLING ON/OFF switch controls power to the refrigeration system and the Cryotrol receptacle. To start the unit, place the COOLING ON/OFF switch in the ON position. The green light behind the switch will light.

Once the unit is on, the refrigeration system will reduce the temperature of the cooling fluid to the lowest achievable temperature under the existing heat load conditions.

When the unit is shut off, wait approximately five minutes before restarting. This allows time for the refrigeration pressures to equalize. If the pressures are not allowed to equalize, the compressor will short-cycle (clicking sound) and no cooling will occur.

Temperature Adjustment

If temperature control is desired, a Cryotrol Temperature Controller is required. Refer to the Cryotrol Temperature Controller Instruction and Operation Manual for installation and operation instructions.

The CB-60/CB-80 is designed for continuous low temperature operation. Do not operate either unit above -25°C.

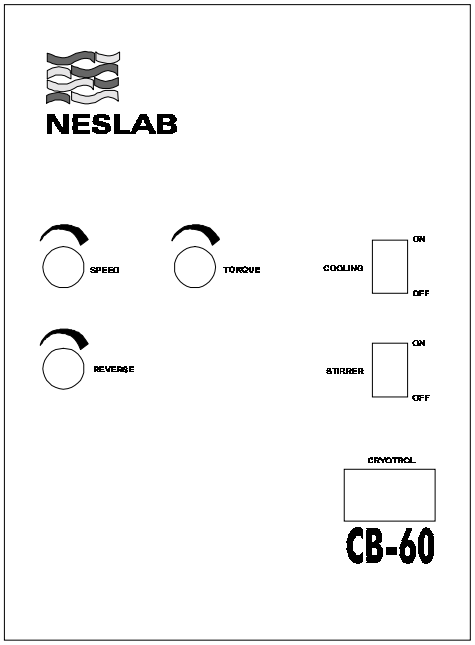

CB-60

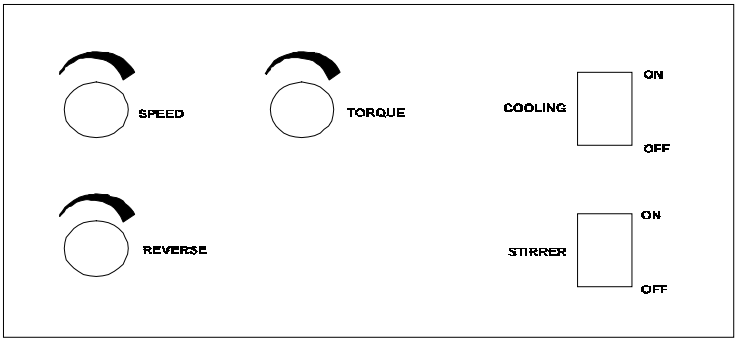

CB-80

Stirring

The lower switch, labelled STIRRER ON OFF, controls power to the stirring mechanism in the unit. Power to the stirring mechanism is independent from the COOLING ON OFF switch; the stirrer can operate if the COOLING ON OFF switch is in the OFF position.

The knob labelled SPEED controls the speed of the stirring mechanism. The speed is adjustable from 0 to 1000 RPM. Turn the knob clockwise to increase the speed.

The knob labelled TORQUE controls the power of the stirring mechanism. Turn the knob clockwise to increase the power. Adjustments to the power may be required to maintain proper stirring in the bath as the cooling fluid becomes more viscous.

NOTE: The heat input in the bath increases as the torque increases. To ensure maximum cooling capacity, use the minimum power (torque) needed to maintain adequate stirring.

The knob labelled REVERSE, controls the period of the reversing feature of the stirring mechanism. The reversing feature automatically reverses the direction of stirring to minimize vortexing in the bath. Turn the knob fully counterclockwise to disable the reversing feature. Turn the knob clockwise to decrease the period of reversing and increase the speed (RPM).

Section V Maintenance and Service

Service Contracts

Thermo NESLAB offers on-site Service Contracts that are designed to provide extended life and minimal down-time for your unit. For more information, contact our Service Department (see Preface, After-sale Support).



Always turn the unit off and disconnect the line cord from the power source before performing any service or maintenance procedures.

Cleaning

Condenser

The unit pulls substantial amounts of air through a finned condenser. A build up of dust or debris on the fins of the heat exchanger will cause a reduction in cooling capacity, and, in extreme cases, compressor failure.

Periodic vacuuming of the heat exchanger is necessary. The frequency of cleaning depends on the operating environment. We recommend making a monthly visual inspection of the heat exchanger after initial installation. After several months, the cleaning frequency will be established.

Bath

Periodically clean the case and stainless steel bath using a mild soapy solution. Do not use steel wool; it is too abrasive and can initiate rusting. Dry the bath using a soft cloth.

Cooling Fluid

The cooling fluid should be replaced periodically when operating at low temperatures. The concentration of water in the cooling fluid will increase over time, causing a reduction in cooling capacity.

Refer to Section III, Filling Requirements for cooling fluid replacement instructions.

Section VI Troubleshooting

Checklist

Unit will not start.
Check power source. Refer to the serial number label on the rear of the unit for the specific electrical requirements of your unit. Make sure the voltage of the power source meets the specified voltage, ±10% (see Section III, Electrical Requirements).

Unit will not cool.
Make sure the unit has adequate ventilation. Air is drawn through the front of the unit and discharged through the rear. The unit must be positioned so the intake and discharge are not impeded. A minimum clearance of 12 inches (30 centimeters) on the front and rear of the unit is necessary for adequate ventilation. Inadequate ventilation will cause a reduction in cooling capacity, and, in extreme cases, compressor failure (see Section III, Site; Section V, Cleaning).

When the unit is shut off, wait approximately five minutes before restarting. This allows time for the refrigeration pressures to equalize. If the pressures are not allowed to equalize, the compressor will short-cycle (clicking sound) and no cooling will occur (see Section IV, Operation).

Check for ice build up in the bath. If ice has accumulated, replace the cooling fluid (see Section V, Cleaning).

Spin bar does not operate.
Contact Thermo NESLAB service department.

Service Assistance

If, after following these troubleshooting steps, your units fails to operate properly, contact our Service Department for assistance (see Preface, After-sale Support). Before calling, please obtain the following information:

Part number
Serial number
Voltage of unit
Voltage of power source
Ambient temperature where unit is located

Technical Support

Our Service Department can provide you with a wiring diagram and complete list of spare parts for your unit (see Preface, After-sale Support). Before calling, please obtain the following information:

Part number
Serial number

WARRANTY

Thermo NESLAB Instruments, Inc. warrants for 12 months from date of shipment any Thermo NESLAB unit according to the following terms.

Any part of the unit manufactured or supplied by Thermo NESLAB and found in the reasonable judgment of Thermo NESLAB to be defective in material or workmanship will be repaired at an authorized Thermo NESLAB Repair Depot without charge for parts or labor. The unit, including any defective part must be returned to an authorized Thermo NESLAB Repair Depot within the warranty period. The expense of returning the unit to the authorized Thermo NESLAB Repair Depot for warranty service will be paid for by the buyer. Thermo NESLAB's responsibility in respect to warranty claims is limited to performing the required repairs or replacements, and no claim of breach of warranty shall be cause for cancellation or recision of the contract of sales of any unit.With respect to units that qualify for field service repairs, Thermo NESLAB's responsibility is limited to the component parts necessary for the repair and the labor that is required on site to perform the repair. Any travel labor or mileage charges are the financial responsibility of the buyer.

The buyer shall be responsible for any evaluation or warranty service call (including labor charges) if no defects are found with the Thermo NESLAB product.

This warranty does not cover any unit that has been subject to misuse, neglect, or accident. This warranty does not apply to any damage to the unit that is the result of improper installation or maintenance, or to any unit that has been operated or maintained in any way contrary to the operating or maintenance instructions specified in Thermo NESLAB's Instruction and Operation Manual. This warranty does not cover any unit that has been altered or modified so as to change its intended use.

In addition, this warranty does not extend to repairs made by the use of parts, accessories, or fluids which are either incompatible with the unit or adversely affect its operation, performance, or durability.

Thermo NESLAB reserves the right to change or improve the design of any unit without assuming any obligation to modify any unit previously manufactured.

THE FOREGOING EXPRESS WARRANTY IS IN LIEU OF ALL OTHER WARRANTIES, EXPRESSED OR IMPLIED, INCLUDING BUT NOT LIMITED TO WARRANTIES OR MERCHANTABILITY AND FITNESS FOR A PARTICULAR PURPOSE.

Thermo NESLAB'S OBLIGATION UNDER THIS WARRANTY IS STRICTLY AND EXCLUSIVELY LIMITED TO THE REPAIR OR REPLACEMENT OF DEFECTIVE COMPONENT PARTS AND Thermo NESLAB DOES NOT ASSUME OR AUTHORIZE ANYONE TO ASSUME FOR IT ANY OTHER OBLIGATION.

Thermo NESLAB ASSUMES NO RESPONSIBILITY FOR INCIDENTAL, CONSEQUENTIAL, OR OTHER DAMAGES INCLUDING, BUT NOT LIMITED TO LOSS OR DAMAGE TO PROPERTY, LOSS OF PROFITS OR REVENUE, LOSS OF THE UNIT, LOSS OF TIME, OR INCONVENIENCE.

This warranty applies to units sold in the United States. Any units sold elsewhere are warranted by the affiliated marketing company of Thermo NESLAB Instruments, Inc. This warranty and all matters arising pursuant to it shall be governed by the law of the State of New Hampshire, United States. All legal actions brought in relation hereto shall be filed in the appropriate state or federal courts in New Hampshire, unless waived by Thermo NESLAB.



Immersion Coolers Cold Baths

Adding one of our Immersion Coolers or Cold Baths to your laboratory is a wise investment. Both are designed to eliminate the use of dry ice or liquid nitrogen, and feature durable, heavy-duty refrigeration systems that can operate continuously without trouble. Choose an Immersion Cooler, with its cold finger probe, or a Cold Bath, with the cold finger built into a self contained reservoir. If you calculate the cost of buying a year's worth of dry ice or LN_2, and compare it with the cost of running either, you'll be pleasantly surprised. Our systems often beat the price of chemical refrigerants.

Immersion Coolers - CC Series

When we pioneered the concept of an immersion cooler years ago, ur aim was to provide convenient, efficient cooling to replace hemical refrigerants and to free-up the time required for the con- tant feeding of cold traps. Two models of cold-finger coolers, the CC-65 and CC-100, deliver low end temperatures to - 90°C, with a hoice of three different cooling probes, each delivering the maxi- mum amount of cooling area possible. Designed to run continuous- y, the CC Series eliminates the need for frequent feeding of chemi- al refrigerants. You'll have no more trips to the storeroom and no more waiting for the dry ice delivery. Heavy-duty refrigeration systems employing complete CFC-free refrigerants provide quick cool downs and repeatable temperatures, which translate to more accurate results. Choose our accessory Cryotrol Temperature Controller for control of temperatures and stability to ±0.5°C. We've been building immersion coolers longer than anyone and with thousands in use in the field, you can trust a NESLAB Cryocool to deliver consistent, trouble free cooling.

R probe

This short, rigid probe is excellent for immersion in containers such as dewars. It is available on both the CC-65 and CC-100

F probe

This small diameter cooling probe is flexible and designed for cooling vacuum traps, vapor traps, or containers with small diameter openings. A flexible design allows for coiling. This probe is available on the CC-100

FV probe

This probe is similar to the F probe but has a smaller diameter. It is available on both the CC-65 and CC-100

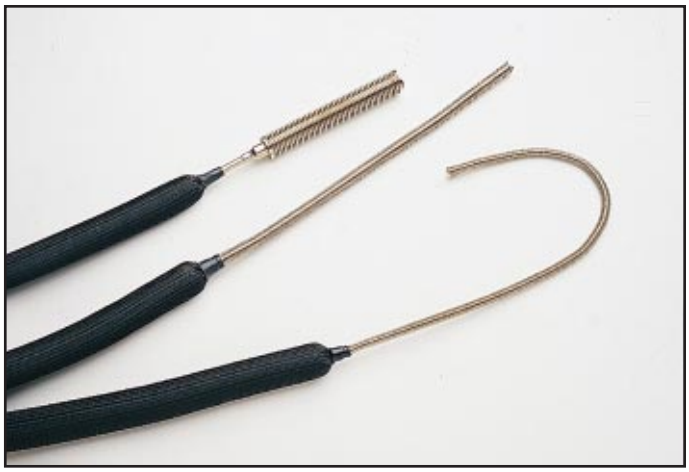



Immersion Cooler Specifications

MODEL	CC-65	CC-100
TEMPERATURE RANGE	-20°C to -55°C	-25°C to -90°C
TEMPERATURE STABILITY	±0.5°C	±0.5°C
LOW TEMPERATURE 50 Hz Models	-60°C with No Load -50°C with No Load	-90°C with No Load -87°C with No Load
COOLING CAPACITY 50 Hz Models	55 Watts at -40°C 45 Watts at -40°C	80 Watts at -70°C 83 Watts at -65°C
HOSE DIMENSIONS (L x Diam.) In. Cm.	44 x $1^{1/4}$ 111.8 x 3.2	65 x $1^{1/2}$ 165.1 x 3.81
PROBE DIMENSIONS (L x Diam.) In. Cm.	FV: 25 x 1/2 R: $7^{1/4}$ x $1^{1/4}$ FV: 63.5 x 1.3 R: 18.4 x 3.2	FV: 25 x 1/2 R: $7^{1/4}$ x $1^{1/4}$ F: 18 x 5/8 FV: 63.5 x 1.3 R: 18.4 x 3.2 F: 45.7 x 1.6
DIMENSIONS (H x W x D) In. Cm.	$15^{1/4}$ x $7^{1/2}$ x $10^{1/4}$ 38.7 x 19.1 x 26	$20^{1/2}$ x 14 $^{1/2}$ x 17 $^{3/4}$ 52.1 x 36.8 x 45.1
POWER REQUIREMENTS 50 Hz Models:	115V, 60 Hz, 3.5 Amps 220-240V, 50 Hz, 1.7 Amps	115V, 60 Hz, 12 Amps 220-240V, 50 Hz, 5 Amps
SHIPPING WEIGHT	41 Lbs/18.6 Kgs	130 Lbs/59 Kgs

Specifications obtained using fluid with specific heat of 0.5, in a 2 liter container, at ambient 20°C. Time to temperature determined once fluid temperature stabilized, for 60Hz, 50Hz may vary. Specifications subject to change.

APPLICATIONS

- Vapor Trapping
- Vacuum Pumps
- Solvent Trapping
- Lyophilization
- Freezing Points
- Impact Testing

ACCESSORY

- Cryotrol Temperature Controller

Cooling Capacity

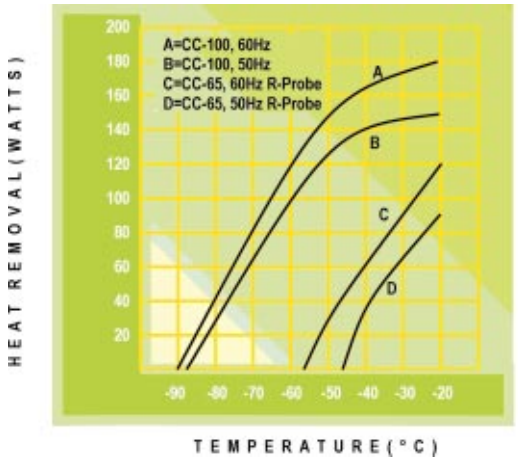

Time to Temperature

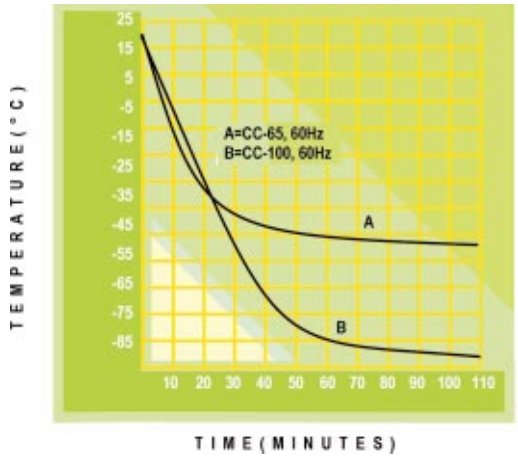

Immersion Coolers

PBC/IBC Series

Use a PBC or IBC when you need quick cool-down or below ambient temperatures in a fluid vessel. Easy-to-use, these cold finger coolers provide temperatures to -25°C and are ideal for replacing dry ice use. Choose from three models depending on your heat oad removal requirements. Each is designed for continuous duty with a trouble-free hermetically sealed refrigeration compressor. For applications requiring temperature control, use our accessory Cryotrol Temperature Controller.

Accessory Temperature Controller

Cryotrol

Enhance your low temperature work with a NESLAB Cryotrol. Designed for use with NESLAB Immersion Coolers and Cold Baths, this electronic temperature device allows you to control cooling of your application, a major improvement if you currently use dry ice or other chemical refrigerants to achieve low temperatures. To cool your fluid to a selected temperature, plug the Cryotrol into the socket of the NESLAB Immersion Coolers and Cold Bath. Simply immerse the controller sensing probe into the fluid and set the control dial to the desired temperature.

Optimum Cooling-Efficiency
Efficient nickel-plated bronze cooling probe design allows for optimum cooling and the proper surface area for optimum efficiency

Flexible Hose
The cooling head is mounted on a flexible insulated hose which aids in positioning the probe in hard to reach spots.



Immersion Coolers Specifications

MODEL	IBC-4	PBC-2	PBC-75
TEMPERATURE RANGE	+40°C to -25°C	+40°C to -25°C	+40°C to -25°C
COOLING CAPACITY 50 Hz Models	400 Watts at 20°C 325 Watts at 20°C	1000 Watts at 20°C 830 Watts at 20°C	1550 Watts at 20°C 1285 Watts at 20°C
HOSE DIMENSIONS (Length x Diameter) In. Cm.	42 x 1 106.7 x 2.5	54 x $1^{3/4}$ 137.2 x 4.4	54 x $1^{3/4}$ 137.2 x 4.4
PROBE DIMENSIONS (Length x Diameter) In. Cm.	$4^{3/8}$ x 2 11.1 x 5.1	$7^{3/4}$ x $1^{3/4}$ 19.7 x 4.4	12 x $1^{3/4}$ 30.5 x 4.4
DIMENSIONS (H x W x D) In. Cm.	$13^{9/16}$ x $8^{1/4}$ x $11^{1/2}$ 34.4 x 20.9 x 29.2	$14^{1/2}$ x 15 x 21 36.8 x 38.1 x 53.3	$16^{1/2}$ x $17^{1/4}$ x $22^{1/2}$ 41.9 x 43.8 x 57.2
POWER REQUIREMENTS 50 Hz Models:	115V, 60 Hz, 4 Amps 220-240V, 50 Hz, 3 Amps	115V, 60 Hz, 10 Amps 220-240V, 50 Hz, 6 Amps	115V, 60 Hz, 14 Amps 220-240V, 50 Hz, 8 Amps
SHIPPING WEIGHT	42 Lbs/19 Kgs	125 Lbs/56.7 Kgs	150 Lbs/68 Kgs

Specifications obtained using fluid with specific heat of 0.5, in a 2 liter container, at ambient 20°C. Specifications subject to change

APPLICATIONS

- Replace ice baths
- Rapid cool down
- Reaction heat removal
- Trapping
- Freezing points

Cryotrol Specifications

MODEL	CRYOTROL
TEMPERATURE RANGE	-100°C to +20°C
SENSOR	Stainless Steel 4'(1.2M) lead
SENSOR DIMENSIONS (Diameter x Length) In. Cm.	3/16 x 10 .5 x 25.4
POWER REQUIREMENTS 50 Hz Models:	115V, 60 Hz, .6 Amps 220-240V, 50 Hz, .3 Amps
SHIPPING WEIGHT	6 Lbs/2.7 Kgs

Specifications subject to change

±0.5°C Stability
A Cryotrol Temperature Controller can produce excellent stability from -90°C to +20°C. Improve your results with predictable, even temperatures



Cold Baths - CB Series

NESLAB's Cold Baths are convenient, all purpose baths that eliminate the inconvenience of using dry ice or liquid nitrogen in a dewar flask. Simple to operate, the units quickly cool-down to low end temperatures, or can be controlled with an accessory Cryotrol Temperature Controller, which plugs directly into the Cold Bath and allows you to set the temperature via an analog control dial see page 25).

NESLAB Cold Baths are equipped with a seamless, stainless steel reservoir for excellent fluid compatibility. A rugged, solid state magnetic stirrer ensures excellent fluid mixing and temperature stability and is designed to handle increasing fluid viscosity at low end temperatures. A PVC reservoir cover is included and features a gasket to provide a tight seal and reduce fluid evaporation or ice build-up from condensation.

No More Dry Ice
NESLAB Cold Baths can pay for themselves within one year by eliminating the cost of handling and storage problems associated with liquid nitrogen and solid CO_2



Excellent Stability
The CB-60 and CB-80 feature a solid state reversible magnetic stirrer and a user adjustable torque control for temperature uniformity



Gasketed Cover
The PVC reservoir cover features a gasket to provide a tight seal and reduce fluid evaporation or ice build-up



Cold Bath Specifications

MODEL	CB-60	CB-80
TEMPERATURE RANGE	-25°C to -50°C	-25°C to -80°C
TEMPERATURE STABILITY	±0.5°C	±0.5°C
LOW TEMPERATURE 50 Hz Models	-50°C with no load -50°C with no load	-80°C with no load -75°C with no load
COOLING CAPACITY 50 Hz Models	75 Watts at -30°C 60 Watts at -30°C	120 Watts at -50°C 100 Watts at -50°C
WORK AREA (Diam. x Depth) In. Cm.	$6^{1/2}$ x 6 16.5 x 15.2	$7^{3/4}$ x $7^{3/4}$ 19.7 x 19.7
BATH VOLUME Gallons/Liters:	1/3.8	2/7.6
DIMENSIONS (H x W x D) In. Cm.	$19^{3/4}$ x $11^{3/4}$ x $13^{3/4}$ 50.2 x 29.8 x 34.9	40 x 16 x $22^{1/2}$ 101.6 x 40.6 x 57.2
POWER REQUIREMENTS 50 Hz Models:	115V, 60 Hz, 6 Amps 220-240V, 50 Hz, 3 Amps	115V, 60 Hz, 9 Amps 220-240V, 50 Hz, 4.5 Amps
SHIPPING WEIGHT	75 Lbs/34 Kgs	215 Lbs/97.5 Kgs

Specifications obtained using fluid with specific heat of 0.5, at ambient 20°C. Time to temperature determined once fluid temperature stabilized, for 60Hz. 50Hz may vary. Specifications subject to change.

APPLICATIONS

- Vapor Trapping
- Freeze Drying
- Solvent Trapping
- Lyophilization
- Freezing Points
- Impact Testing
- Shell Freezing
- Replacing Dry Ice
- Laboratory Cooling

ACCESSORIES

- Cryotrol Temperature Controller

Cooling Capacity

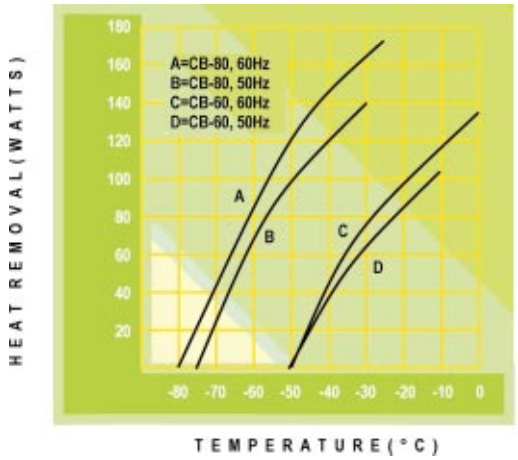

Time to Temperature

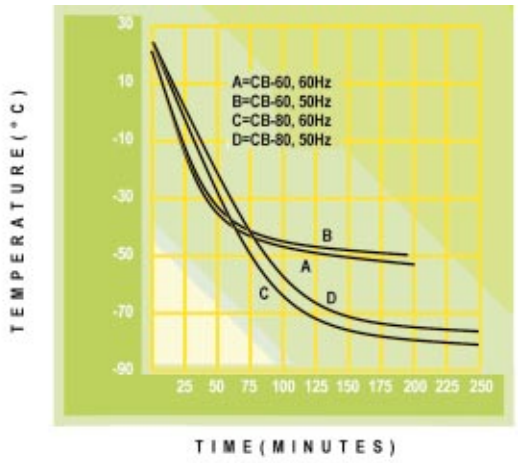

CC-65/CC-100
CFC-Free
Immersion Coolers

Thermo NESLAB Manual P/N 002782
Rev. 04/05/99

Instruction and Operation Manual

CryoCool Series Immersion Coolers
Instruction and Operation Manual

Table of Contents

PREFACE

Compliance 2
Unpacking 2
Warranty 2
NES-care 2
After-sale Support 2

SECTION I
Safety

Warnings 3

SECTION II
General Information

Description 4
Specifications 4

SECTION III
Installation

Site 6
Electrical Requirements 6
Fluids 7
Cooling Probes 7

SECTION IV
Operation

Operation 8
Temperature Adjustment 8

SECTION V
Maintenance

Service Contracts 9
Cleaning 9
Cooling Fluid 9

SECTION VI
Troubleshooting

Checklist 10
Service Assistance 10
Technical Support 10

SECTION VII
Warranty 11

Preface

Compliance

Products tested and found to be in compliance with the requirements defined in the EMC standards defined by 89/336/EEC as well as Low Voltage Directive (LVD) 73/23/EEC can be identified by the CE label on the rear of the unit. The testing has demonstrated compliance with the following directives:

LVD, 73/23/EEC	Complies with UL 3101-1:93
EMC, 89/336/EEC	EN 55011, Class A Verification EN 50082-1:1992 IEC 1000-4-2:1995 IEC 1000-4-3:1994 IEC 1000-4-4:1995

For any additional information refer to the Letter of Compliance that shipped with the unit (Declaration of Conformity).

Unpacking

Retain all cartons and packing material until the unit is operated and found to be in good condition. If the unit shows external or internal damage, or does not operate properly, contact the transportation company and file a damage claim. Under ICC regulations, this is your responsibility.

Warranty

Units have a warranty against defective parts and workmanship for one full year from date of shipment. See back page for more details.

NES-care Extended Warranty Contract

- Extend parts and labor coverage for an additional year.
- Worry-free operation.
- Control service costs.
- Eliminate the need to generate repair orders.
- No unexpected repair costs.

Other contract options are available. Please contact Thermo NESLAB for more information.

After-sale Support

Thermo NESLAB is committed to customer service both during and after the sale. If you have questions concerning the operation of your unit or the information in this manual, contact our Sales Department. If your unit fails to operate properly or if you have questions concerning spare parts or Service Contracts, contact our Service Department.

Before calling, *please* refer to the serial number label on the rear of the case top to obtain the following information:

- BOM number _____

- Serial number _____

Section I Safety

Warnings

Make sure you read and understand all instructions and safety precautions listed in this manual before installing or operating your unit. If you have any questions concerning the operation of your unit or the information in this manual, contact our Sales Department (see After-sale Support).

Performance of installation, operation, or maintenance procedures other than those described in this manual may result in a hazardous situation and may void the manufacturer's warranty.

Transport the unit with care. Sudden jolts or drops can damage the refrigeration lines.

Observe all warning labels.

Never remove warning labels.

Never operate damaged equipment.

Always turn off the unit and disconnect the line cord from the power source before performing any service or maintenance procedures, or before moving the unit.

Never operate equipment with damaged line cords.

Refer service and repairs to a qualified technician.

In addition to the safety warnings listed above, warnings are posted throughout the manual. These warnings are designated by an exclamation mark inside an equilateral triangle with text highlighted in bold print. Read and follow these important instructions. Failure to observe these instructions can result in permanent damage to the unit, significant property damage, or personal injury or death.

Section II General Information

Description

The CryoCool Series of immersion coolers is designed as a refrigeration source for sub-ambient work in liquid baths.

CryoCools employ mechanical refrigeration systems constructed with full-hermetic refrigeration compressors. The CC-65 employs a single stage refrigeration system with one compressor. The CC-100 has a dual stage refrigeration system using two compressors in cascade configuration. An insulated coaxial hose assembly carries refrigerant to the cooling probe.

Specifications

	CC-65	CC-100
Temperature Range[1]	-20°C to -55°C	-25°C to -90°C
Temperature Stability	±0.5°C	±0.5°C
Evaporator Head Dimensions[2] (Length x Diameter)		
F-head		
Inches	N/A	18 x 5/8
Centimeters	N/A	45.7 x 1.6
FV-head		
Inches	25 x 1/2	25 x 1/2
Centimeters	63.5 x 1.3	63.5 x 1.3
R-head		
Inches	7 ¼ x 1 1/4	7 ¼ x 1 1/4
Centimeters	18.4 x 3.2	18.4 x 3.2
Minimum Bend Radius[3]		
F-head		
Inches	N/A	1 1/2
Centimeters	N/A	3.8
FV-head		
Inches	1	1
Centimeters	2.5	2.5
R-head		
Inches	N/A	N/A
Centimeters	N/A	N/A

1. Low end specifications listed for "no load" conditions.
2. See Section III, Cooling Probes for a description of the evaporator heads.
3. The minimum bend radius is the smallest radius that the cooling probe can be bent without suffering damage at room temperature. Never bend the probe when it is cold.

	CC-65	CC-100
Evaporator Hose Dimensions (Length x Diameter)		
Inches	44 x 1 1/4	65 x 1 ½
Centimeters	111.8 x 3.2	165.1 x 3.8
Unit Dimensions (H x W x D)		
Inches	15 1/4 x 7 1/2 x 10 1/4	20 1/2 x 14 1/2 x 17 3/4
Centimeters	38.7 x 19.1 x 26.0	52.1 x 36.8 x 45.1
Weight		
Pounds	41.0	130.0
Kilograms	18.6	59.0

Cooling Capacity[4]

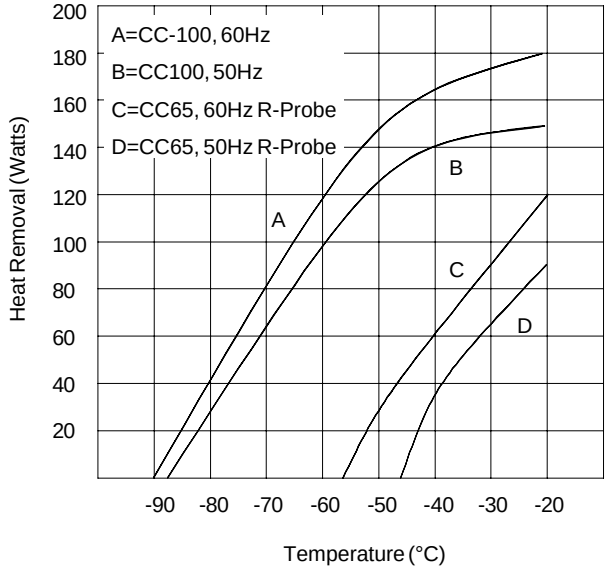

4. Specifications obtained in a 2 liter container at +20°C ambient with cooling fluid specific heat of 0.5.

Section III Installation

Site

The unit should be located in a laboratory or clean industrial environment where ambient temperatures are inside the range of +55°F to +95°F (+13°C to +35°C).



Never place the unit in a location where excessive heat, moisture, or corrosive materials are present.

The unit has an air-cooled refrigeration system. On the CC-65 air is drawn through the top of the unit and discharged through the sides and bottom of the unit. On the CC-100 air is drawn through the front of the unit and discharged through the rear. The unit must be positioned so the intake and discharge are not impeded. A minimum clearance of 12 inches (30 centimeters) on all vented sides is necessary for adequate ventilation.

Inadequate ventilation will cause a reduction in cooling capacity and, in extreme cases, compressor failure.

Excessively dusty areas should be avoided and a periodic cleaning schedule should be instituted (see Section V, Cleaning).

The unit will retain its full rated capacity in ambient temperatures up to approximately +75°F (+24°C). Above +75°F, reduce the cooling capacity 1% for every 1°F above +75°F, up to a maximum ambient temperature of +95°F. In terms of Celsius, reduce the cooling capacity 1% for every 0.5°C above +24°C, up to a maximum ambient temperature of +35°C.

Electrical Requirements

Refer to the serial number label on the rear of the unit for the specific electrical requirements of your unit.

Make sure the voltage of the power source meets the specified voltage, ±10%.



Make sure an adequate ground connection is provided.

Fluids

The selected fluid must have a viscosity of 50 centistokes or less at the lowest operating temperature.



Never use flammable or corrosive fluids with this unit.

Cooling Probes

Three cooling probes (or evaporator heads) are available with CryoCool units: F (flexible), FV (flexible, very), and R (rigid). Refer to Section II, Specifications to determine the specific cooling probe on your unit.

Place the cooling probe in the work area. For maximum cooling efficiency, the probe should be fully immersed in the fluid and should be located as close as possible to the agitator or stirrer motor (if so equipped).



Care should be taken not to stretch or bend the probe beyond it limits or exceed its minimum bend radius. Bend the probe only at room temperatures, never bend it when it is cold.

Section IV Operation

Operation

Before starting the unit, double check all electrical connections and make sure the cooling probe is properly immersed in the work area.

All CryoCools are operated by a single power switch.

The CC-100 has three lights: one indicates the unit is operating, a second indicates the high stage compressor is operating, and a third indicates the low stage compressor is operating.

Once the unit is turned on, the refrigeration system will reduce the temperature of the cooling fluid in the work area to the lowest achievable temperature under the existing heat load conditions.

For best results, stirring or agitation in the work area is recommended. When not stirred, cooling capacities will be reduced and the work area will show temperature layering, with the coldest, most dense zone at the bottom.

When the unit is shut off, wait approximately five minutes before restarting. This allows time for the refrigeration pressures to equalize. If the pressures are not allowed to equalize, the compressor will short-cycle (clicking sound) and no cooling will occur.

Temperature Adjustment

If temperature control is desired, a Thermo NESLAB Cryotrol Temperature Controller is required. Refer to the Cryotrol Temperature Controller Instruction and Operation Manual for installation and operation instructions.



Never operate any CryoCool unit above -25°C.

Older Cryotrols are equipped with a round 8 pin connector. If you wish to connect your older Cryotrol unit to the CryoCool, an adapter cable is available from Thermo NESLAB. Contact our Service Department for more information (see Preface, After-Sale Support).

A Thermo NESLAB Exatrol Digital Temperature controller may also be used to control temperature. The Exatrol is designed for more precise temperature control and offers tighter temperature stability than the Cryotrol.

Refer to the Exatrol manual for additional information.

Section V Maintenance

Service Contracts

Thermo NESLAB offers on-site Service Contracts that are designed to provide extended life and minimal down-time for your unit. For more information, contact our Service Department (see Preface, After-sale Support).

Cleaning

For proper operation, the unit needs to pull substantial amounts of air through the condenser. A build up of dust or debris on the fins of the condenser will lead to a loss of cooling capacity.

Periodic vacuuming of the condenser fins is necessary. The frequency of cleaning depends on the operating environment. We recommend making a monthly visual inspection of the condenser after initial installation. After several months, the cleaning frequency will be established.

Cooling Fluid

The cooling fluid in the work area should be periodically replaced when operating at low temperatures. At low temperatures, the cooling fluid may collect water vapor from the air. As the concentration of water in the cooling fluid increases, performance is adversely affected.

Section VI Troubleshooting

Checklist

Unit will not start.

Make sure the voltage of the power source meets the specified voltage, ±10%. Refer to the serial number label on the rear of the unit for the specific electrical requirements of your unit.

Loss of cooling capacity.

Make sure the heat load in the work area is not greater than the cooling capacity of the unit. Refer to Section II, Specifications to review the cooling capacity specifications.

Check for ice build up on the cooling probe. A layer of ice will act as insulation and reduce the cooling capacity. Ice build up is often an indication that the cooling fluid needs replacing. Defrost the cooling probe and change the cooling fluid.

When the unit is shut off, wait approximately five minutes before restarting. This allows time for the refrigeration pressures to equalize. If the pressures are not allowed to equalize, the compressor will short-cycle.

Service Assistance

If, after following these troubleshooting steps, your unit fails to operate properly, contact our Service Department for assistance (see Preface, After-sale Support). Before calling, *please* obtain the following information:

Part number
Serial number
Voltage of unit
Voltage of power source

Technical Support

Our Service Department can provide you with a complete list of spare parts for your unit (see Preface, After-sale Support). Before calling, *please* obtain the following information:

Part number
Serial number

WARRANTY

Thermo NESLAB Instruments, Inc. warrants for 12 months from date of shipment any Thermo NESLAB unit according to the following terms.

Any part of the unit manufactured or supplied by Thermo NESLAB and found in the reasonable judgment of Thermo NESLAB to be defective in material or workmanship will be repaired at an authorized Thermo NESLAB Repair Depot without charge for parts or labor. The unit, including any defective part must be returned to an authorized Thermo NESLAB Repair Depot within the warranty period. The expense of returning the unit to the authorized Thermo NESLAB Repair Depot for warranty service will be paid for by the buyer. Thermo NESLAB's responsibility in respect to warranty claims is limited to performing the required repairs or replacements, and no claim of breach of warranty shall be cause for cancellation or recision of the contract of sales of any unit.With respect to units that qualify for field service repairs, Thermo NESLAB's responsibility is limited to the component parts necessary for the repair and the labor that is required on site to perform the repair. Any travel labor or mileage charges are the financial responsibility of the buyer.

The buyer shall be responsible for any evaluation or warranty service call (including labor charges) if no defects are found with the Thermo NESLAB product.

This warranty does not cover any unit that has been subject to misuse, neglect, or accident. This warranty does not apply to any damage to the unit that is the result of improper installation or maintenance, or to any unit that has been operated or maintained in any way contrary to the operating or maintenance instructions specified in Thermo NESLAB's Instruction and Operation Manual. This warranty does not cover any unit that has been altered or modified so as to change its intended use.

In addition, this warranty does not extend to repairs made by the use of parts, accessories, or fluids which are either incompatible with the unit or adversely affect its operation, performance, or durability.

Thermo NESLAB reserves the right to change or improve the design of any unit without assuming any obligation to modify any unit previously manufactured.

THE FOREGOING EXPRESS WARRANTY IS IN LIEU OF ALL OTHER WARRANTIES, EXPRESSED OR IMPLIED, INCLUDING BUT NOT LIMITED TO WARRANTIES OR MERCHANTABILITY AND FITNESS FOR A PARTICULAR PURPOSE.

Thermo NESLAB'S OBLIGATION UNDER THIS WARRANTY IS STRICTLY AND EXCLUSIVELY LIMITED TO THE REPAIR OR REPLACEMENT OF DEFECTIVE COMPONENT PARTS AND Thermo NESLAB DOES NOT ASSUME OR AUTHORIZE ANYONE TO ASSUME FOR IT ANY OTHER OBLIGATION.

Thermo NESLAB ASSUMES NO RESPONSIBILITY FOR INCIDENTAL, CONSEQUENTIAL, OR OTHER DAMAGES INCLUDING, BUT NOT LIMITED TO LOSS OR DAMAGE TO PROPERTY, LOSS OF PROFITS OR REVENUE, LOSS OF THE UNIT, LOSS OF TIME, OR INCONVENIENCE.

This warranty applies to units sold in the United States. Any units sold elsewhere are warranted by the affiliated marketing company of Thermo NESLAB Instruments, Inc. This warranty and all matters arising pursuant to it shall be governed by the law of the State of New Hampshire, United States. All legal actions brought in relation hereto shall be filed in the appropriate state or federal courts in New Hampshire, unless waived by Thermo NESLAB.

CFT-300
Recirculating Chiller

NESLAB Manual P/N U00702
Rev. 09/22/00

Instruction and Operation Manual



CFT-300 Recirculating Chiller

PREFACE

Compliance 3
Unpacking 3
Warranty 3
After-sale Support 3

SECTION I
Safety

Warnings 4
Additional Warnings 5

SECTION II
General Information

Description 6
Specifications 6
Cooling Capacity 8
Pump Capacity 8

SECTION III
Installation

Site 9
Electrical Requirements 10
Plumbing Requirements 10
Fluids 11
Filling Requirements 12

SECTION IV
Operation

Start Up 13
Temperature Controller 14
Temperature Limits 15
Pressure Relief Valve 15
High/Low Pressure Cutouts 15
High Temperature Cutout (Optional) 16
Heater Package (Optional) 16
External Pressure Reducer (Optional) 17

SECTION V
Maintenance & Service

Service Contracts 18
Draining the Reservoir 18
Cleaning 18
Algae 19
Pump Strainer 19
Pump Lubrication 20
Hoses 20
Suction Discharge Presssure/Speed Check 20
Error Codes 21
Displaying Software Version 21

SECTION VI
Troubleshooting

Checklist 22
Service Assistance 22

APPENDIX A

Water Quality Standards and Recommendations

APPENDIX B

Quick Reference Foreign Translation Guides

APPENDIX C

380-415V 3 Phase 5 Wire Units

WARRANTY

CFT-300 Quick Reference Operating Procedures

Installation

The unit has an air-cooled refrigeration system. Air is drawn in the front of the unit and discharged through rear and side. Position the unit so the intake and discharge are not impeded. Inadequate ventilation will cause a reduction in cooling capacity and, in extreme cases, compressor failure.

Excessively dusty areas should be avoided and a periodic cleaning schedule should be instituted. For proper operation, the unit needs to pull substantial amounts of air through a condenser. A build up of dust or debris on the fins of the condenser will lead to a loss of cooling capacity.

The unit will retain its full rated capacity in ambient temperatures up to approximately +24°C.

Make sure the voltage of the power source meets the specified voltage, ±10%.

The plumbing connections are located on the rear of the unit and are labelled OUTLET and INLET. These connections are ¾ inch FPT. Remove the plastic protective plugs from both plumbing connections. Connect the OUTLET fitting to the inlet of the instrument being cooled. Connect the INLET fitting to the outlet of the instrument being cooled.

To fill the reservoir remove the reservoir access panel by unscrewing the thumbscrews. Locate the reservoir plug (square nut). Remove the plug and fill the reservoir with clean cooling fluid.

Thermo NESLAB recommends using distilled/deionized water with a 0.05 to 0.1 megohm-cm reading.

If you do not have access to distilled/deionized water we recommend using filtered tap water

Operation

Before starting the unit, double check all electrical and plumbing connections. Make sure the circulating system has been filled with cooling fluid.

To start the unit, place the Power Switch to the on position. The Power Switch illuminates to indicate the system is operating. To turn the unit off, place the Power Switch to the off position.

The Cool LED indicates the status of the refrigeration system. It illuminates to indicate the refrigeration system is removing heat from the cooling fluid. As the operating temperature approaches the setpoint, the LED will flash.

When the unit is shut off, wait approximately five minutes before restarting. This allows time for the refrigeration pressures to equalize. If the pressures are not allowed to equalize, the compressor will short-cycle and no cooling will occur.

Temperature Adjustment

To display the temperature setpoint, press and hold the NEXT ENTER button on the controller. To adjust the temperature setpoint, press the YES or NO key until the desired temperature setpoint is indicated on the digital display. Once the setpoint is adjusted, press the NEXT ENTER key. The display will now indicate the temperature of the fluid in the reservoir.

Periodic Maintenance

Periodically inspect the reservoir fluid. If cleaning is necessary, flush the reservoir with a cleaning fluid compatible with the circulating system and the cooling fluid.

The cooling fluid should be replaced periodically. When operating at low temperatures, the concentration of water in the cooling fluid will increase over time, leading to a loss of cooling capacity.

Before changing the cooling fluid, raise the unit's operating temperature to de-ice the cooling coils.

Periodic vacuuming of the condenser fins is necessary. The frequency of cleaning depends on the operating environment. We recommend a visual inspection of the condenser be made monthly after initial installation. After several months, the cleaning frequency will be established.

Units with PD pumps have a strainer. If debris is in the system, the strainer will prevent the material from being drawn into the pump and damaging the pump vanes.

After initial installation, the strainer may become clogged. The strainer must be cleaned after the first week of installation. After this first cleaning, a monthly visual inspection is recommended. After several months, the frequency of cleaning will be established. Before cleaning, disconnect the power cord from the power source and drain the reservoir.

Preface

Compliance

Products tested and found to be in compliance with the requirements defined in the EMC standards defined by 89/336/EEC as well as Low Voltage Directive (LVD) 73/23/EEC can be identified by the CE label on the rear of the unit. The testing has demonstrated compliance with the following directives:

LVD, 73/23/EEC	Complies with UL 3101-1:93
EMC, 89/336/EEC	EN 55011, Class A Verification EN 50082-1:1992 IEC 1000-4-2:1995 IEC 1000-4-3:1994 IEC 1000-4-4:1995

For any additional information refer to the Letter of Compliance that shipped with the unit (Declaration of Conformity).

Unpacking

Retain all cartons and packing material until the unit is operated and found to be in good condition. If the unit shows external or internal damage, or does not operate properly, contact the transportation company and file a damage claim. Under ICC regulations, this is your responsibility.

When unpacking the unit, Thermo NESLAB recommends using a hoist. Units are not equipped with handles. Roll the unit on its castors to move it.

If this product has been modified to operate at 0°C or lower, it has been tested with a non-freezing fluid. Although the system has been drained, some residual fluid may remain. This will not hinder your unit's performance.

Warranty

Units have a warranty against defective parts and workmanship for one full year from date of shipment. See back page for more details.

NES-care Extended Warranty Contract

- Extend parts and labor coverage for an additional year.
- Worry-free operation.
- Control service costs.
- Eliminate the need to generate repair orders.
- No unexpected repair costs.

Other contract options are available. Please contact Thermo NESLAB for more information.

After-sale Support

Thermo NESLAB is committed to customer service both during and after the sale. If you have questions concerning the operation of your unit or the information in this manual, contact our Sales Department. If your unit fails to operate properly or if you have questions concerning spare parts or Service Contracts, contact our Service Department.

Before calling, please refer to the serial number label on the rear of the case top to obtain the following information:

- BOM number _____

- Serial number _____

- Software version (see page 21) _____

Section I Safety

Warnings



Warnings are posted throughout the manual. These warnings are designated by an exclamation mark inside an equilateral triangle and text highlighted in bold. Read and follow these important instructions. Failure to observe these instructions can result in permanent damage to the unit, significant property damage, or personal injury or death.

Make sure you read and understand all instructions and safety precautions listed in this manual before installing or operating your unit. If you have any questions concerning the operation of your unit or the information in this manual, please contact our Sales Department (see After-sale Support).

Never place the unit in a location where excessive heat, moisture, or corrosive materials are present.

The unit construction provides extra protection against the risk of electrical shock by grounding appropriate metal parts. The extra protection may not function unless the power cord is connected to a properly grounded outlet. It is the user's responsibility to assure a proper ground connection is provided.

Never connect the OUTLET/SUPPLY or INLET/RETURN fitting to your building water supply or any water pressure source.

Never use flammable or corrosive fluids with this unit. Distilled and deionized water may be aggressive and cause material corrosion. Please contact Thermo NESLAB before subjecting this unit to prolonged exposure to distilled or deionized water.

Do not use automobile anti-freeze. Commercial anti-freeze contains silicates that can damage the pump seals. Use of automobile anti-freeze will void the manufacturer’s warranty.

Do not replace reservoir plug with a non-vented type or damage to the tank may occur.

For personal safety and equipment reliability, the following procedure should only be performed by a competent technician. Contact our Service Department for assistance (see Preface, After-sale Support).

Additional Warnings

In addition to the specific warnings listed on the previous page the following general warnings apply to you unit:

Performance of installation, operation, or maintenance procedures other than those described in this manual may result in a hazardous situation and may void the manufacturer's warranty.

Transport the unit with care. Sudden jolts or drops can damage the refrigeration lines.

Observe all warning labels.

Never remove warning labels.

Never operate damaged or leaking equipment.

Never operate the unit without cooling fluid in the reservoir.

Always turn off the unit and disconnect the power cord from the power source before performing any service or maintenance procedures, or before moving the unit.

Always empty the reservoir before moving the unit.

Never operate equipment with damaged power cords.

Refer service and repairs to a qualified technician.

Section II General Information

Description

The CFT-300 Recirculating Chiller is designed to provide a continuous supply of cooling fluid at a constant temperature and volume.

The unit consists of an air-cooled refrigeration system, a sealable reservoir, recirculating pump, and a temperature controller.

Throughout the manual, you will be asked to consult the unit's serial number label or the pump identification label for specific information. Both labels are located on the rear of the unit.

Specifications

Cooling Capacity[1]

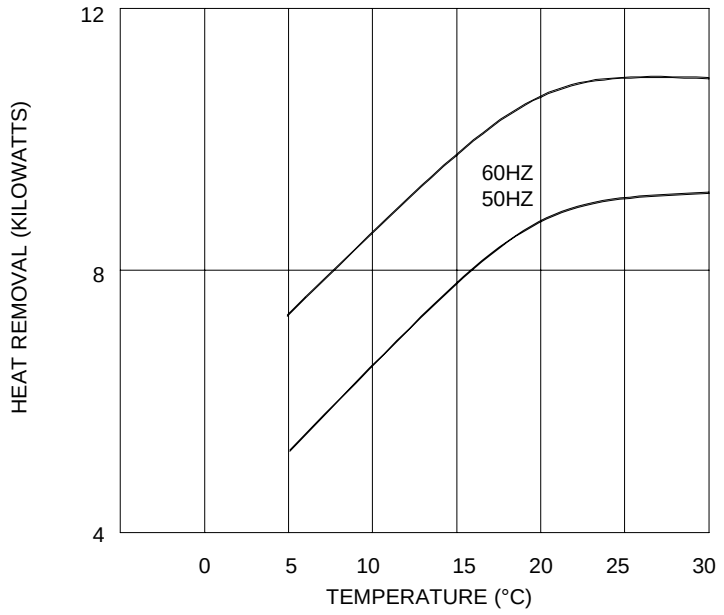

Temperature Range[2]	+5°C to +35°C
Temperature Stability[3]	±1.0°C
Reservoir Volume	
Gallons	5.6
Liters	21.3
Refrigerant	R22
Pollution Degree	II, IAW IEC 664

1. Circulating water at 20°C, at 20°C ambient. Cooling capacity will vary depending on fluid temperature, ambient temperature, and cooling fluid. A PD-2 pump was used.
2. Modified temperature ranges from -15°C to +85°C are available.
3. With 86% heat load.

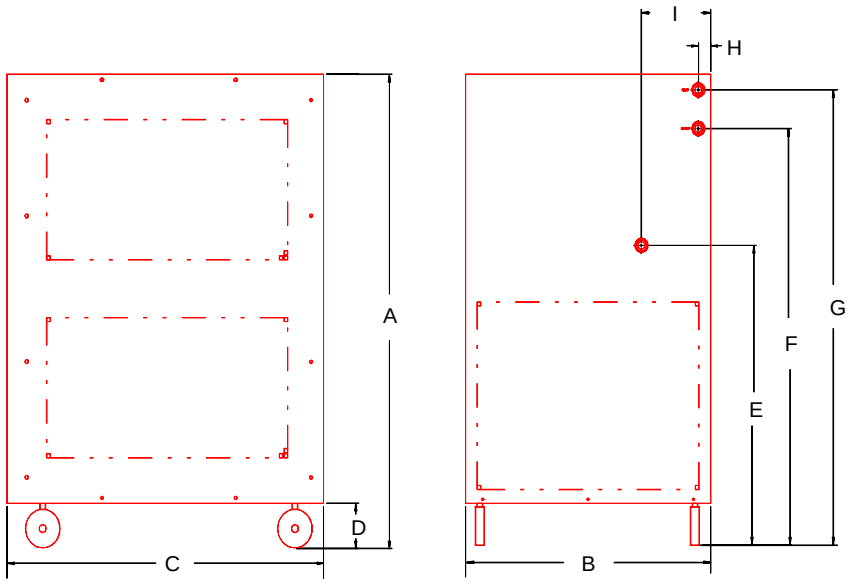

	U.S.	Metric
Unit Dimensions *Dimension A*	**43**	**109.2**
Dimension B	**25½**	**64.8**
Dimension C	**27¾**	**70.5**
Dimension D	**2¾**	**7.0**
Dimension E	**29**	**73.7**
Dimension F	**38¼**	**97.2**
Dimension G	**41¼**	**104.8**
Dimension H	**1**	**2.5**
Dimension I	**1**	**2.5**
Crate Dimensions (H x W x D)	**35 x 33 x 56**	**88.9 x 83.8 x 142.2**
Shipping Weight	**450**	**204.1**
Air Intake	**2500**	**2500**
Electrical Requirements *Volts*	**208/230V**	**380V**
Hertz	**60Hz**	**50Hz**
Phase	**3**	**3**

1. Dimensions are inches/centimeters. Dimension A is the height of the unit. The unit width and depth (dimensions B and C) are the case dimensions, add approximately 2 inches (5 centimeters) to include the plumbing connections.
2. Dimension D is the distance from the floor to the bottom of the unit case (height of the castors).
3. Dimension E is the distance from the floor to the center of the DRAIN connection.
4. Dimension F is the distance from the floor of the center of the OUTLET connection.
5. Dimension G is the distance from the floor of the center of the INLET connection.
6. Dimension H is the distance from the unit's left side to the center of the INLET and OUTLET connections.
7. Dimension I is the distance from the unit's left side to the center of the DRAIN connection.
8. Weights are given in pounds/ kilograms.
9. Air intake is given in cubic feet per minute.

Rev 04/12/99

Pump Capacity

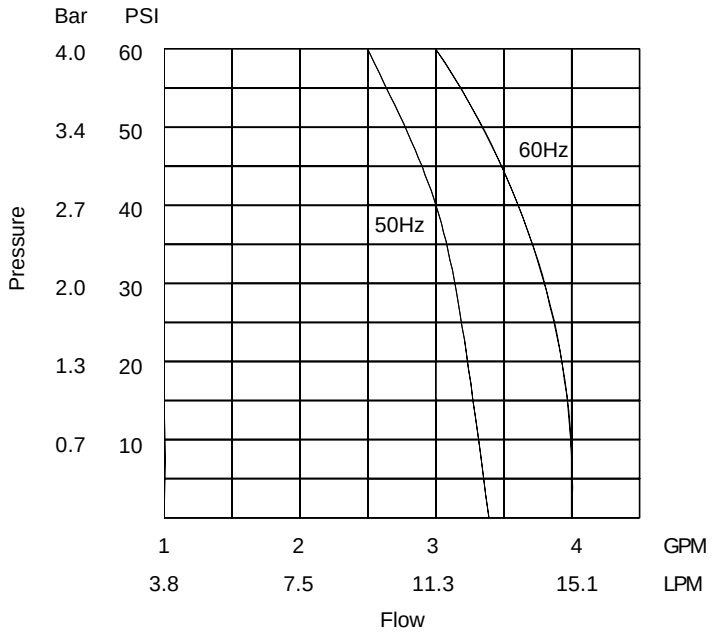

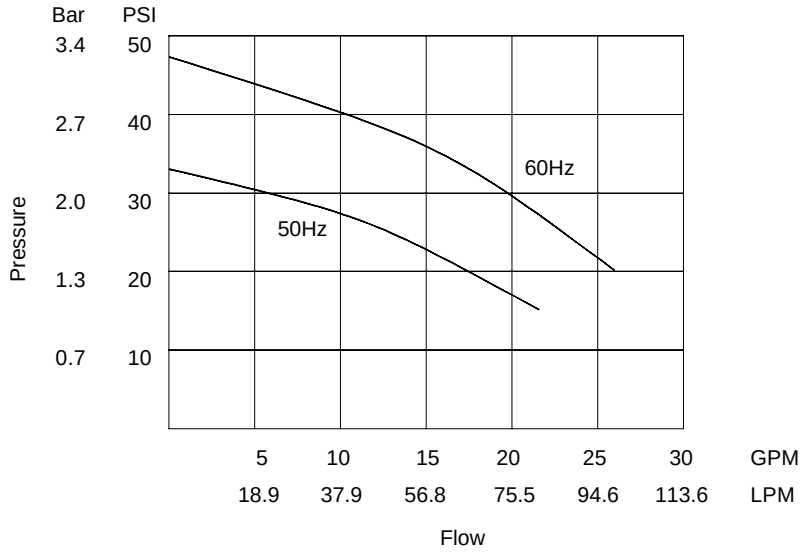

Section III Installation

Site

The unit should be located in a laboratory or clean industrial environment where ambient temperatures are inside the range of +13°C to +35°C, and maximum humidity is below 80%.

Never place the unit in a location where excessive heat, moisture, or corrosive materials are present.

The unit has an air-cooled refrigeration system. Air is drawn through the front of the unit and discharged through rear and side panels. The unit must be positioned so the intake and discharge are not impeded. A minimum clearance of 18 inches (45 centimeters) on all vented sides is necessary for adequate ventilation. Inadequate ventilation will cause a reduction in cooling capacity and, in extreme cases, compressor failure.

Excessively dusty areas should be avoided and a periodic cleaning schedule should be instituted (see Section V, Cleaning).

The unit will retain its full rated capacity in altitudes up to 6500 feet (2000 meters), and ambient temperatures up to approximately +24°C. Above +24°C, reduce the cooling capacity 1% for every 0.5°C above +24°C, up to a maximum ambient temperature of +35°C.

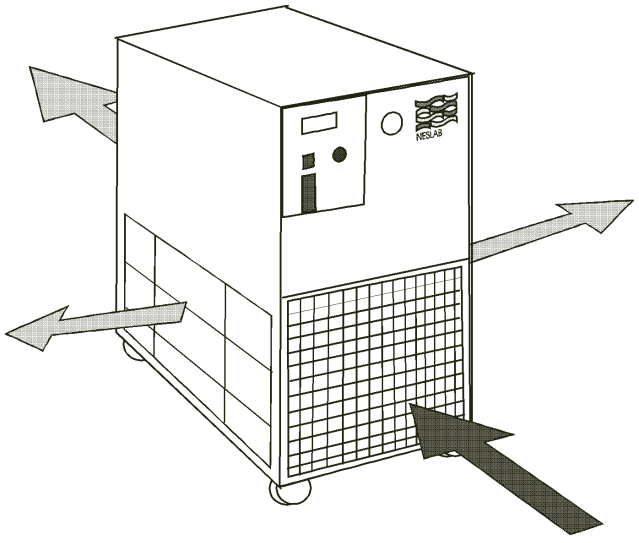

Direction of Air Flow

Electrical Requirements



The unit construction provides extra protection against the risk of electrical shock by grounding appropriate metal parts. The extra protection may not function unless the power cord is connected to a properly grounded outlet. It is the user's responsibility to assure a proper ground connection is provided.

Refer to Section II, Specifications, and to the serial number label on the rear of the unit for the specific electrical requirements of your unit. Ensure the voltage of the power source meets the specified voltage, ±10%. Transient overvoltages must comply with OVERVOLTAGE CATEGORY II. For mains supply, the minimum and normal category is II.

Units are also equipped with a compressor crankcase heater. The crankcase heater warms the oil in the compressor and prevents refrigerant from mixing with the oil. Before start up, the unit must be connected to its power source for at least 12 hours. This allows time for the oil to be heated and separate from the refrigerant.

50 Hertz units are supplied with a junction box located behing the controller panel. Wire the power connections in accordance to local, state and federal electrical codes. For 380-415V 3 Phase 5 Wire units refer to Appendix C for additional information. Double check all wiring to make sure it is properly connected and protected from the elements.

For 50 Hertz units which are not supplied with line cords we recommend a harmonized (HAR) grounded 3-conductor cord, type H05V V - F with conductors of nominal 1.0mm^2 cross section, rated 10 amps or a 5-conductor cord, type H07RN-F rated 20 amps, for the 5-wire units. A suitable cord end is required for connecting to the equipment (IEC 320/C13) and should terminate with an IEC approved plug for proper connection to branch circuit. Cusomer provided circuit protection is suggested. Make sure the voltage of the power source meets the specified voltage, ±10%.

Plumbing Requirements

Before installing the unit to an instrument that previously used tap water as a cooling fluid, flush the instrument several times to remove any rust or scale that has built up. The manufacturer of the instrument should be able to recommend a cleaning fluid for their equipment.

The plumbing connections are located on the rear of the unit and are labelled INLET and OUTLET. Connections are ¾ inch FPT.

Remove the plastic protective plugs from both plumbing connections. Connect the INLET fitting to the outlet of your application. Connect the OUTLET fitting to the inlet of your application .



Never connect the fittings to your building water supply or any water pressure source.

Flexible tubing, if used, should be of heavy wall or reinforced construction. All tubing should be rated to withstand 80 psig at the highest operating temperatures. Make sure all tubing connections are securely clamped. Avoid running tubing near radiators, hot water pipes, etc. If substantial lengths of tubing are necessary, insulation may be required to prevent loss of cooling capacity.

Tubing and insulation are available from Thermo NESLAB. Contact our Sales Department for more information (see Preface, After-sale Support).

Keep the distance between the unit and your application as short as possible, and use the largest diameter tubing practical. Tubing should be straight and without bends. If diameter reductions must be made, make them at the inlet and outlet of the instrument being cooled, not at the CFT.

If substantial lengths of cooling lines are required, pre-filled them with cooling fluid before connecting them to the unit.

Fluids



Never use flammable or corrosive fluids with this unit. Do not use automotive anti-freeze. Commercial anti-freeze contains silicates that can damage the pump seals. Use of automotive anti-freeze will void the manufacturer's warranty.

Thermo NESLAB recommends using distilled/deionized water with a 0.05 to 0.1 megohm-cm reading.



Highly distilled/deionized water, above the 3 megohm-cm region, may become aggressive and is not recommended for use with units with wetted parts other than stainless steel. Distilled/deionized water in the 15 megohm-cm region is definitely aggressive and should not be used. Units operating in these regions should be closely monitored. See Water Quality Standards and Recommendations in Appendix A.

If you do not have access to distilled/deionized water we recommend using filtered tap water. Thermo NESLAB cannot recommend any custom fluids, these fluids are too dependent on your particular application.

Below +8°C, a non-freezing solution is required. The selected cooling fluid must have a viscosity of 50 centistokes or less. A 50/50 mixture, by volume, of distilled/deionized water and laboratory grade ethylene glycol is suggested.

For units with extended temperature ranges above +35°C, we recommend distilled/deionized water up to +80°C. Above +80°C, you are responsible for the fluid(s) used.

Filling Requirements

Remove the reservoir access panel by unscrewing the thumbscrews. Locate the reservoir plug (square nut). Remove the plug and fill the reservoir with clean cooling fluid, following the special considerations outlined in the following paragraphs.

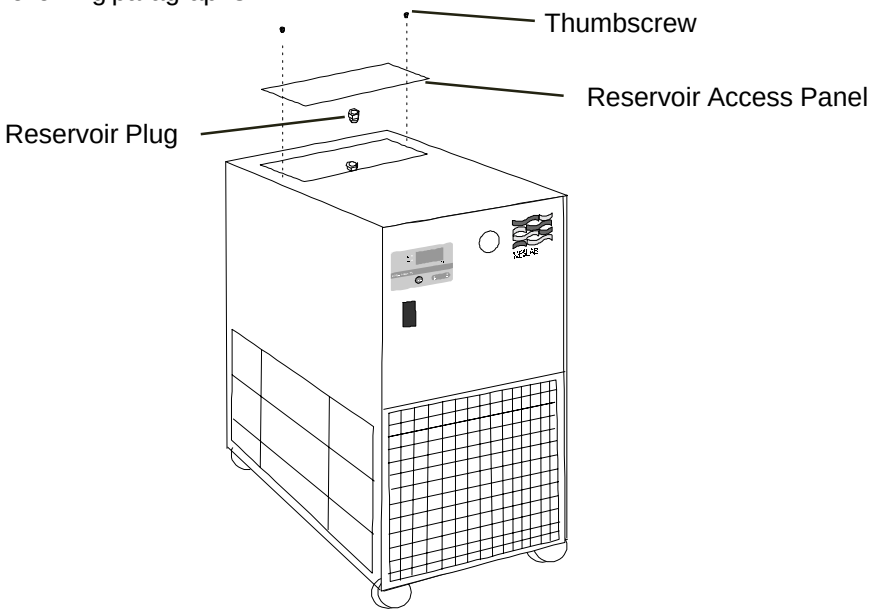

Reservoir filling locations

Circulating to a closed system (closed to the atmosphere)
Fill the reservoir to the bottom of the fill hole threads. Since the reservoir capacity is small compared to many instruments being cooled, have extra cooling fluid on hand to keep the system topped off when external circulation is started.

NOTE: The tank in your unit has a vent which relieves pressure built up from thermal expansion of water. The vent is located on the reservoir plug. It activates when tank pressure reaches 3 - 5 psi.

Do not replace reservoir plug with an non-vented type or damage to the tank may occur.

Circulating to an open system (open to the atmosphere)
Fill the reservoir so ¾ of the fill hole threads are covered. Wrap the tank plug with Teflon® sealing tape. Replace the tank plug and tighten securely to prevent air entry.

When circulating cooling fluid to an open vessel or tank, connect the OUTLET/SUPPLY and INLET/RETURN lines to the open tank. Secure the INLET/RETURN (suction) line below the fluid surface. The INLET/RETURN line should be submerged deep enough to avoid sucking air. Make sure the INLET/RETURN line is free of particles and debris that can block the flow of fluid. A baffle or screen may be required.

Section IV Operation

Start Up

Before starting the unit, double check all electrical and plumbing connections and make sure the circulating system (the CFT, the instrument being cooled, and the tubing that connects them) has been properly filled with cooling fluid. On units with a circuit breaker located on the rear of the unit, ensure it is the on position. To start the unit, place the POWER Switch to the on (**I**) position. The refrigeration system and the recirculation pump will start. The POWER Switch illuminates to indicate the system is operating. Units with PD pumps display the pump operating pressure on the RECIRCULATING PRESSURE gauge.

To turn the unit off, place the POWER Switch to the off (**0**) position.

COOL indicates the status of the refrigeration system. It illuminates to indicate the refrigeration system is removing heat from the cooling fluid. As the operating temperature approaches the temperature setpoint, the LED will flash. IDLE indicates the unit is in a hot-gas-bypass mode of operation. As the operating temperature approaches the temperature setpoint, the LED extinguishes.

When the unit is shut off, wait approximately five minutes before restarting. This allows time for the refrigeration pressures to equalize. If the pressures are not allowed to equalize, the compressor will short-cycle (clicking sound) and no cooling will occur.

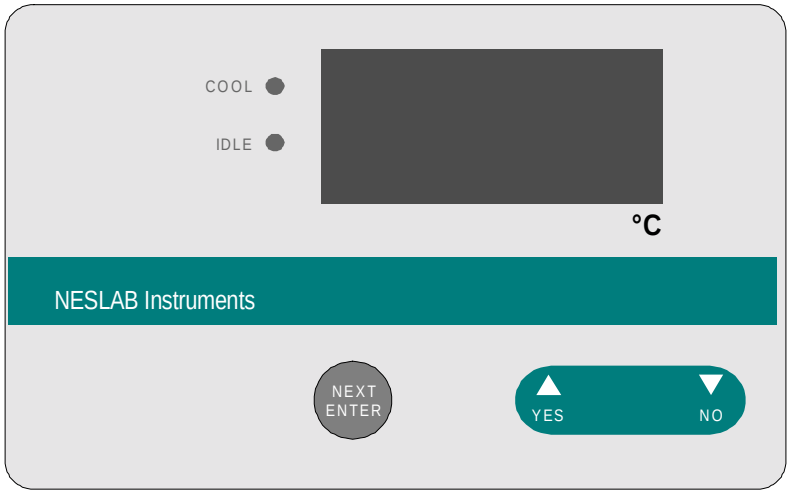

Digital Temperature Controller

Digital Controller

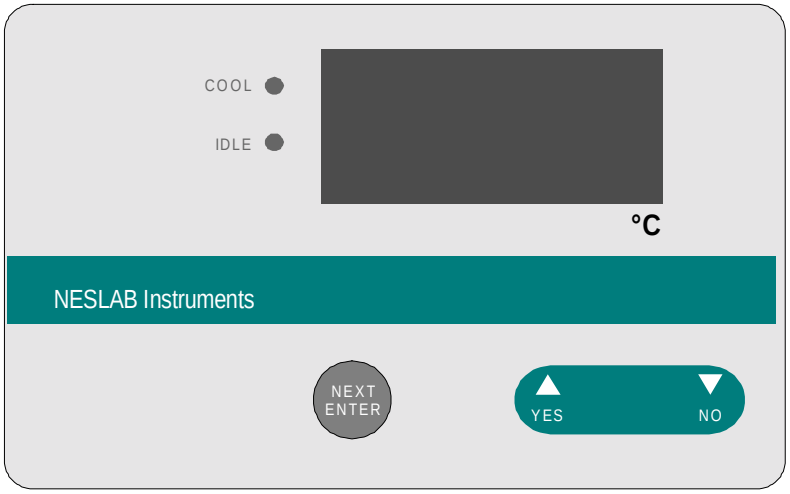

Digital Temperature Controller

The digital controller controls temperature using a PID (Proportional-Integral-Derivative) algorithm. It is designed with self-diagnostic features and easy to use operator interface.

NEXT ENTER
Use this key to accept and save changes.

YES, ▲
This key is used to increase numerical values.

NO, ▼
This key is used to decrease numerical values.

When the controller is powered it displays the reservoir fluid temperature. Press the **NEXT ENTER** key to view the setpoint. The display flashs between **SP** and the actual setpoint number. If desired, use the **YES** and **NO** keys to change the setpoint. The display flashes as soon as either key is depressed. Once the desired setpoint is displayed, press the **NEXT ENTER** key.

NOTE: The new value will not be used by the controller until the **NEXT ENTER** key is depressed and the display stops flashing. The controller will not allow you to enter a value above the maximum or below the minimum value, or any illegal value. If you try to enter an illegal value the display will revert to its original value when the last digit was entered.

If the **NEXT ENTER** key is not depressed within one minute, the controller will time out and the new value will not be accepted. The controller will revert to the previous value.

NOTE: Error codes are addressed in Section V, Maintenance and Service.

Temperature Limits

The controller is used to set the high and low temperature limits. If a limit is exceeded the controller will display an error code, see Section V.

With the controller displaying the reservoir fluid temperature, press and hold the **NO** key and then press the **NEXT ENTER** key. The controller will display TUNE. Press the **YES** key to display COOL. Press the **NO** key to display either HEAT or HIT, for high temperature limit. (HEAT is only displayed on units with an optional heater, press NO to display HIT.)

To change the HIT value press **YES**. The display will flash HIT and the actual value. Use the **YES** and **NO** keys to change the value. Once the desired value is displayed press the **NEXT ENTER** key twice. The display will indicate LOT for low temperature limit. Use the same procedure to change the low temperature limit. The display will indicate STOR. Press **YES** to accept the changes, press **NO** to restore the previous values. The controller will again display the reservoir fluid temperature.

Pressure Relief Valve

Units with PD pumps have a pressure relief valve which establishes the maximum operating pressure of the unit. If the pressure of the fluid leaving the pump exceeds the valve setting, the relief valve will bypass the fluid within the unit to relieve the pressure. The relief valve does not determine the actual operating pressure; the operating pressure is determined by the back pressure of the system.

If an adjustment is necessary, contact our Customer Service Department.

High/Low Pressure Cutouts

Units are equipped with refrigeration High Pressure Cutouts (HPC) and Low Pressure Cutouts (LPC). Should either cutout activate the unit will shut down.

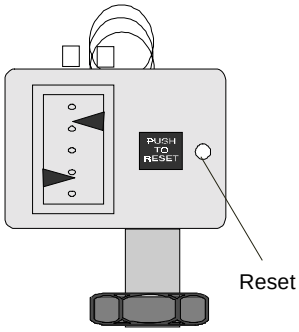

HPC/LPC (Typical)

The HPC activates if there is a blockage in the refrigeration lines or if the refrigerant temperature becomes too hot. The HPC is factory preset at 400 psi.

The LPC activates if there is a leak in the refrigeration lines. THE LPC is factory preset at 4 psi.

The cutouts are located inside the case behind the rear panel. Once the cause of the shut down has been determined and corrected, manually depress the white button on the applicable cutout. If a "click" is not heard when depressing the button, the cutout was not activated and the unit shut down for another reason.

High Temperature Cutout (Optional)

The High Temperature Cutout (HTC) is designed to shut down the unit in the event the temperature of the fluid in the reservoir exceeds the HTC setting. The HTC is normally located on the rear of the unit.

NOTE: The HTC temperature scale is in °F.

Heater Package (Optional)

Heaters are controlled by a switch on the temperature controller. The heater itself is accessible through the small service panel on the rear of the unit.

The controller will indicate a low level display if the fluid level in the reservoir drops below proper operating level.

Illustration A shows the desired fluid level for normal operation.

Should the reservoir be filled as shown in illustration B, units designed to operate at high-end temperatures (near boiling) may cause air in the reservoir to become trapped. The air can be vented by slightly tilting the unit forward on its front castors.

Any fluid venting from the reservoir will drain through a hose which feeds to a small hole in the bottom of the unit.

Do not used silicon-based fluids with units designed to operate at high temperatures. These type fluids will damage the hoses and pump seal.

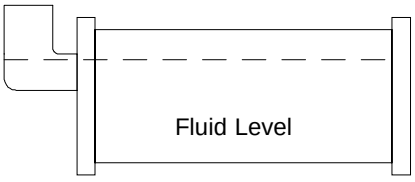

Illustration A

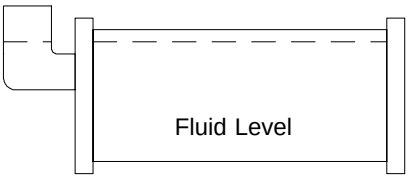

Illustration B

External Pressure Reducer (Optional)

For applications requiring a maximum pressure less than 55 PSI (380 kPa), an External Pressure Reducer (EPR) is available. An EPR allows an adjustable operating pressure of 10 to 50 PSI (70 to 345 kPa). If the pressure of the fluid leaving the chiller exceeds the relief valve setting, the relief valve will bypass excess fluid back into the chiller to relieve the overpressure.

The pressure of the system is determined by the back pressure of the connected equipment and the flow rate of the recirculating fluid to your application. Connect the EPR as described.

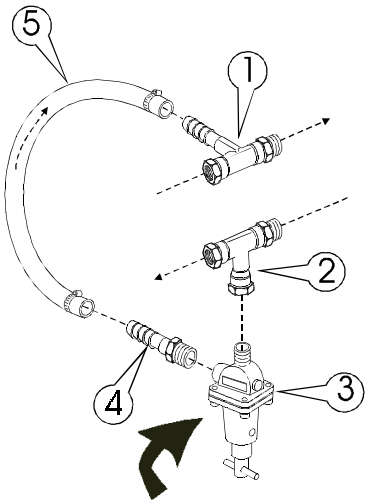

NOTE: Install the fittings in the exact sequence shown.

NOTE: Use Teflon® tape on all threaded fittings.

Connect the Inlet Tee Assembly (1) to the chiller. Connect the Outlet Tee Assembly (2) to the chiller. Attach the relief valve (3) to the Outlet Tee Assembly (2). Attach the Hose Nipple (4) to the Relief Valve (3). Attach the Hose (5) between the Inlet Tee Assembly (1) and the Hose Nipple (4).

The EPR is now installed. Connect the inlet (to your application) to the remaining fitting of the Outlet Tee Assembly (2). Connect the outlet (from your application) to the remaining fitting of the Inlet Tee Assembly (1).

Tighten the hose clamps tight enough to prevent leakage. Do not overtighten or the clamps will bite into the flexible tubing and cause excessive wear. If a torque wrench is available, torque hose clamps to 50 in/lbs (280 cm/kg). Nylon-reinforced hose tends to cold-flow, so the clamps will need to be torqued again later. (The hose clamps do not actually loosen, but rather the hose outside diameter decreases.)

The "T" adjustment handle is equipped with a locknut. To adjust the relief pressure setting loosen the locknut and turn the "T" handle to the minimum pressure setting (direction of arrow).

To simulate blockage, close (or pinch off) the hose between the EPR outlet tee assembly and the instrument being cooled. Monitor the operating pressure of the unit. Turn the "T" handle until the desired relief pressure is set. (The EPR valve cannot be set lower than the total back pressure of the instrument being cooled or the instrument will not receive any flow.)

Tighten the locknut to secure the position of the "T" handle. Open the hose between the EPR outlet tee assembly and the instrument being cooled.

Section V Maintenance and Service



For personal safety and equipment reliability, the following procedure should only be performed by a qualified technician. Contact our Service Department for assistance (see Preface, After-sale Support).

Service Contracts

Thermo NESLAB offers on-site Service Contracts that are designed to provide extended life and minimal down-time for your unit. For more information, contact our Service Department (see Preface, After-sale Support).

Draining the Reservoir

Units are equipped with a ½ inch FPT DRAIN fitting located on the rear of the unit. To drain other CFT reservoirs we recommend the use of a wet/dry vacuum. Remove the reservoir plug and carefully insert the wet/dry vacuum so as not to damage the cooling coils. **NOTE:** Tilting the unit more than 45° may allow compressor oil to seep into the suction line.



Do not blow high-pressure air into the system. Doing so may rupture the reservoir.

Cleaning

Reservoir

Periodically inspect the fluid inside the reservoir. If cleaning is necessary, flush the reservoir with a cleaning fluid compatible with the circulating system and the cooling fluid.

The cooling fluid should be replaced periodically. When operating at low temperatures, the concentration of water in the cooling fluid will increase over time, leading to a loss of cooling capacity.

Before changing the cooling fluid, raise the operating temperature of the unit to de-ice the cooling coils. Refer to Section III, Filling Requirements for instructions on replacing the cooling fluid.

Condenser

For proper operation, the unit needs to pull substantial amounts of air through a condenser. A build up of dust or debris on the fins of the condenser will lead to a loss of cooling capacity.

The lower front of the unit has a one-piece grille assembly. Gently pry the assembly off with a flathead screwdriver. Use care not to scratch the paint.

Periodic vacuuming of the condenser fins is necessary. The frequency of cleaning depends on the operating environment. We recommend a visual inspection of the condenser be made monthly after initial installation. After several months, the cleaning frequency will be established.

Algae

To restrict the growth of algae in the reservoir, it is recommended that the reservoir cover be kept in place and that all circulation lines be opaque. This will eliminate the entrance of light which is required for the growth of most common algae.

Thermo NESLAB recommends the use of Chloramine-T, 1 gram per 3.5 liters. Other algicides can be harmful to the unit's internal components. Contact NESLAB for additional information.

Pump Strainer

Units with PD pumps have a strainer. Refer to the pump label on the rear of the unit to identify the type of pump in your unit. The strainer is located in the pump suction line.

If debris is in the system, the strainer will prevent the material from being drawn into the pump and damaging the pump vanes.

After initial installation, the strainer may become clogged with debris and scale. Therefore, the strainer must be cleaned after the first week of installation. After this first cleaning, a monthly visual inspection is recommended. After several months, the cleaning frequency will be established.

Before cleaning the strainer, disconnect the power cord from the power source and drain the reservoir.

Remove the wrapper from the unit. Unscrew the black plastic housing and remove the screen.

Clean the screen by rinsing it with water.

When the screen is clean, replace it in the strainer, tighten the housing and replace the wrapper. Refer to Section III, Filling Requirements for instructions on replacing the cooling fluid.

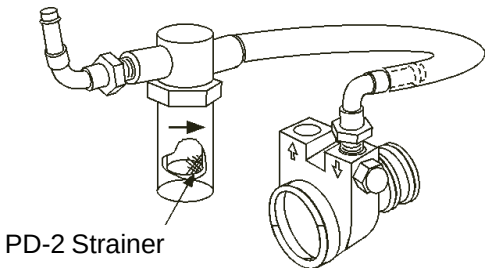

PD-2 Strainer

Pump Motor Lubrication

PD pump motors require periodic lubrication. Refer to the pump label on the rear of the unit to identify the type of pump in your unit.

PD pumps use sleeve type bearings with large reservoirs. Oiling instructions are generally posted on each motor. In the absence of instructions, add approximately 30 to 35 drops of SAE 20 non-detergent oil to each bearing on the following schedule (SAE 20 = 142 CS viscosity):

Duty Cycle	Oiling Frequency
Continuous	Once every year
Intermittent	Once every 2 years
Occasional	Once every 5 years

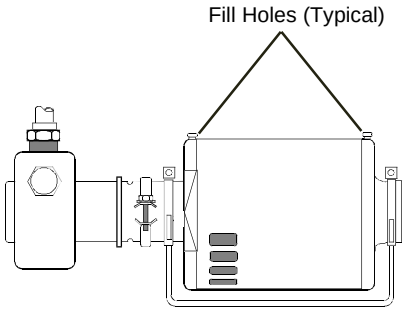

Hoses

The unit's internal and external hoses and clamps should be inspected and tightened on at least a semiannual basis.

Suction Discharge Pressure Speed Check

Unit	Pump	Refrigerant	Suction PSIG	Discharge PSIG	Speed °C/Min
CFT-300	PD2	R22	88 - 94	265 - 280	6.8
CFT-300	CP-55	R22	85 - 90	268 - 280	6.8

Standard temperature 60 Hertz units, derate 17% for 50 Hertz Units. +20°C fluid temperature, unit in the COOL mode, +20°C ambient. 100% water in the reservoir. Wrapper removed.

Error Codes

The controller also has the capability to display error codes. The codes are:

Display	Indication
16	Bad calibration data
19	Temperature below low temperature setpoint
21	Temperature above high temperature setpoint
22	Excessive high temperature, unit requires immediate attention
23	Shorted RTD2
24	Open RTD2
25	Shorted RTD1
26	Open RTD1
ADD	Reservoir fluid below normal operating level

The unit will continue to run with any of the above codes. If any other code appears contact NESLAB customer service, see Preface.

NOTE: Depressing the NEXT ENTER key may clear error codes 01 through 04. Doing so restores the controller to factory-set default values.

Displaying Software Version

This procedure will display the software version number on the unit's display. In the event the unit is not operational, the software version (and the checksum) can also be read from the label which is on the microprocessor chip itself.

The following chart uses an example of software version 000507.49b

begin in the reservoir temperature display	20.3C
Press and hold NO for at least 10 seconds.	0507
displays software version digits to **left** of decimal. Note the two leading zeros do not display.	
Press NEXT	49
displays software version digits to **right** of decimal.	
Press NEXT	2
displays software version revision letter (as its equivalent number - display cannot show letters. A=1, B=2, etc.)	
Press NEXT	0000
displays checksum - this can be disregarded	
Press NEXT	20.3C
returns to the temperature display	

Section VI Troubleshooting

Checklist

Unit will not start

Check the position of the optional circuit breaker the rear of the unit.

Check the line cord, make sure it is plugged in.

Check the voltage of the power source. Make sure it is within the rated voltage of the unit, ±10%.

Check that the Power Switch/Circuit Breaker has not tripped.

Check the setting on the High Temperature Cutout.

All units are equipped with high and low pressure switches. If either switch activates the unit will shut down. Once the cause has been determined you have to manually reset the switch. The switches are located behind the rear panel. (See Section IV, Operation.)

Unit will not circulate fluid

Check the reservoir level. Fill, if necessary.

Make sure the pump has been purged.

Check the pressure gauge (units with PD pumps). If the reading is 60 psig, check the instrument being cooled for restrictions in the cooling line.

Check the pump strainer (units with PD pumps). A clogged strainer can starve the pump.

For 380-415V 3 Phase 5 Wire units, see Appendix B.

Inadequate temperature control

If the temperature continues to rise, make sure the heat load of the instrument being cooled does not exceed the rated specification. (See Section II, Specifications on page 6.)

Make sure the air intake and discharge are not impeded and the ambient temperature does not exceed +35°C.

Make sure the condenser is free of dust and debris. (See Section V, Cleaning.)

If the compressor short-cycles (a clicking sound), check the line voltage. It should be within the 10% of the specified voltage. Wait 5 minutes before restarting the unit.

For 380-415V 3 Phase 5 Wire units, see Appendix B.

Service Assistance

If, after following these troubleshooting steps, your unit fails to operate properly, contact our Service Department for assistance (see Preface, After-sale Support). Before calling, please refer to the serial number label on the rear of the unit to obtain the following information:

- unit BOM number
- unit serial number
- voltage of power source
-software version

Appendix A Water Quality Standards and Recommendations

	Permissible (PPM)	Desirable (PPM)
Microbiologicals		
(algae, bacteria, fungi)	0	0
Inorganic Chemicals		
Calcium	<40	0.6
Chloride	250	<25
Copper	1.3	1.0
Iron	0.3	<0.1
Lead	0.015	0
Magnesium	<12	0.1
Manganese	0.05	<0.03
Nitrates\Nitrites	10 as N	0
Potassium	<20	0.3
Silicate	25	<1.0
Sodium	<20	0.3
Sulfate	250	<50
Hardness	17	<0.05
Total Dissolved Solids	50	10
Other Parameters		
pH	6.5-8.5	7-8
Resistivity	0.01*	0.05-0.1*

* Megohm-Cm (Compensated to 25°C)

Unfavorably high total ionized solids (TIS) can accelerate the rate of galvanic corrosion. These contaminants can function as electrolytes which increase the potential for galvanic cell corrosion and lead to localized corrosion such as pitting which can be observed at the studs and on the outside surface of cooling coils. Eventually, the pitting will become so extensive that the coil will leak refrigerant into the water reservoir.

As an example, raw water in the United States averages 171 ppm (of NaCl). The recommended level for use in a water system is between 0.5 to 5.0 ppm (of NaCl).

Recommendation: Initially fill the tank with distilled/ deionized water. Do not use untreated tap water as the total ionized solids level may be too high. Maintain this water quality at a resistivity of between 1 to 10 megohm-cm (compensated to 25°C) by using a purification system. Although the initial fill may be as high as 10 megohm-cm (compensated to 25°C), the desired level for long time usage is 1 to 3 megohm-cm (compensated to 25°C).

The above two recommendations will reduce the electrolytic potential of the water and prevent or reduce the galvanic corrosion observed.

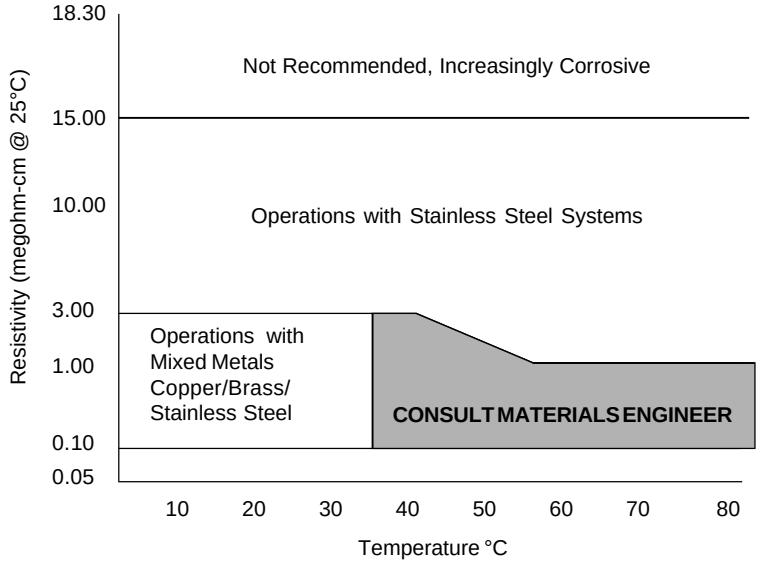

Water Quality Considerations

Appendix C 380-415V 3 Phase 5 Wire Units

The unit is not equipped with a line cord. You are responsible for providing the proper electrical connections.

Run all power connections through the conduit located in the rear of the unit to the unit's power box.

Attach wires to power box as shown below.

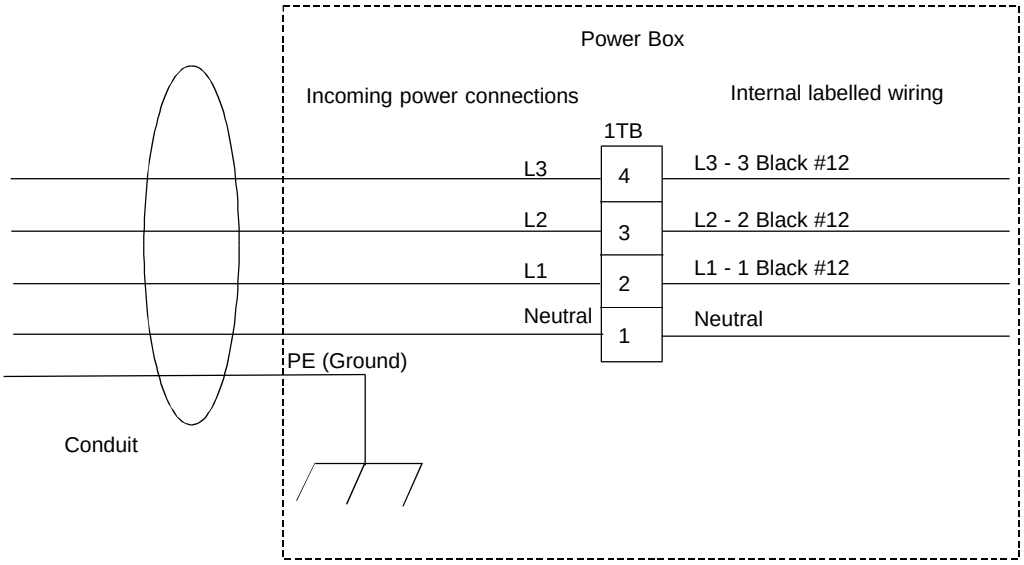

Main Power 4-Position Terminal Block

In order to ensure the proper motor rotation conduct the following tests:

Condensing Fan Motor Test
With the unit on, place a piece of paper in front of the condenser. If the paper adheres to the front grill then the rotation is correct. If the paper blows away from the front grill then the rotation is reversed.

Pump Motor Test
With the unit on, observe the flow out of the unit. If the fluid is not exiting the unit's outlet port there is a good chance that the rotation is reversed.
NOTE: While conducting this test make sure that the flow control valve is opened.

To fix an out of phase condition first turn off the main service power and power to the unit. Reverse any two of the three main power leads going into the unit.

Never remove the green and yellow ground wire or, if equipped, the white neutral wire.

Reconnect the power to the unit. If the unit will not start contact our Service Department.

Continued on next page.

Fuses

Three Class J fuses are used to protect the motor, in addition to a thermal overload device. These fuses are located inside the main control panel. In the event of an open fuse, investigate and correct the source of the overload before replacing the fuse(s).



Always turn off the unit and disconnect the line cord from the power source before attempting to do any service.

To replace the fuses, remove the two screws from the main control panel and then open the panel door. For units equipped with a 380V, 3-Phase, CP-55 pump, NESLAB part number 008596, replace the fuses with Class J, 600V, 3A, TDLY fuses only. Do not replace the fuses with an alternate amperage.

Electrical Requirements

Permanently Connected Equipment must be connected to a branch circuit protector of a rated value no less than the Maximum Overcurrent Protective Device (MOPD) which is on the nameplate. In addition there must be an appropriately rated and marked disconnect device within view of the unit.

WARRANTY

Thermo NESLAB Instruments, Inc. warrants for 12 months from date of shipment any Thermo NESLAB unit according to the following terms.

Any part of the unit manufactured or supplied by Thermo NESLAB and found in the reasonable judgment of Thermo NESLAB to be defective in material or workmanship will be repaired at an authorized Thermo NESLAB Repair Depot without charge for parts or labor. The unit, including any defective part must be returned to an authorized Thermo NESLAB Repair Depot within the warranty period. The expense of returning the unit to the authorized Thermo NESLAB Repair Depot for warranty service will be paid for by the buyer. Thermo NESLAB's responsibility in respect to warranty claims is limited to performing the required repairs or replacements, and no claim of breach of warranty shall be cause for cancellation or recision of the contract of sales of any unit.With respect to units that qualify for field service repairs, Thermo NESLAB's responsibility is limited to the component parts necessary for the repair and the labor that is required on site to perform the repair. Any travel labor or mileage charges are the financial responsibility of the buyer.

The buyer shall be responsible for any evaluation or warranty service call (including labor charges) if no defects are found with the Thermo NESLAB product.

This warranty does not cover any unit that has been subject to misuse, neglect, or accident. This warranty does not apply to any damage to the unit that is the result of improper installation or maintenance, or to any unit that has been operated or maintained in any way contrary to the operating or maintenance instructions specified in Thermo NESLAB's Instruction and Operation Manual. This warranty does not cover any unit that has been altered or modified so as to change its intended use.

In addition, this warranty does not extend to repairs made by the use of parts, accessories, or fluids which are either incompatible with the unit or adversely affect its operation, performance, or durability.

Thermo NESLAB reserves the right to change or improve the design of any unit without assuming any obligation to modify any unit previously manufactured.

THE FOREGOING EXPRESS WARRANTY IS IN LIEU OF ALL OTHER WARRANTIES, EXPRESSED OR IMPLIED, INCLUDING BUT NOT LIMITED TO WARRANTIES OR MERCHANTABILITY AND FITNESS FOR A PARTICULAR PURPOSE.

Thermo NESLAB'S OBLIGATION UNDER THIS WARRANTY IS STRICTLY AND EXCLUSIVELY LIMITED TO THE REPAIR OR REPLACEMENT OF DEFECTIVE COMPONENT PARTS AND Thermo NESLAB DOES NOT ASSUME OR AUTHORIZE ANYONE TO ASSUME FOR IT ANY OTHER OBLIGATION.

Thermo NESLAB ASSUMES NO RESPONSIBILITY FOR INCIDENTAL, CONSEQUENTIAL, OR OTHER DAMAGES INCLUDING, BUT NOT LIMITED TO LOSS OR DAMAGE TO PROPERTY, LOSS OF PROFITS OR REVENUE, LOSS OF THE UNIT, LOSS OF TIME, OR INCONVENIENCE.

This warranty applies to units sold in the United States. Any units sold elsewhere are warranted by the affiliated marketing company of Thermo NESLAB Instruments, Inc. This warranty and all matters arising pursuant to it shall be governed by the law of the State of New Hampshire, United States. All legal actions brought in relation hereto shall be filed in the appropriate state or federal courts in New Hampshire, unless waived by Thermo NESLAB.

CFC-Free CFT-75
Recirculating Chiller

NESLAB Manual P/N 000008
Rev. 07/31/97

Instruction and Operation Manual

CFT-75 (R134a) Recirculating Chiller
Instruction and Operation Manual

PREFACE

Unpacking 3
Warranty 3
After-sale Support 3

SECTION I
Safety

Warnings 4
Additional Warnings 5

SECTION II
General Information

Description 6
Specifications 6

SECTION III
Installation

Site 7
Electrical Requirements 8
Plumbing Requirements 8
Fluids 9
Water Quality Standards and Recommendations 9
Filling Requirements 11

SECTION IV
Operation

Start Up 12
Fault Lights 13

SECTION V
Maintenance and Service

Service Contracts 14
Draining the Reservoir 14
Cleaning 14
Algae 15
Pump Strainer 15
Pump Lubrication 16
Pressure Relief Valve 16

SECTION VI
Troubleshooting

Checklist 17
Service Assistance 17

APPENDIX
International Quick Reference Guides

Section VII
Warranty

CFT-75 Quick Reference Operating Procedures

Installation

The unit has an air-cooled refrigeration system. Air is drawn in the front of the unit and discharged through rear and side. Position the unit so the intake and discharge are not impeded. Inadequate ventilation will cause a reduction in cooling capacity and, in extreme cases, compressor failure.

Excessively dusty areas should be avoided and a periodic cleaning schedule should be instituted. For proper operation, the unit needs to pull substantial amounts of air through a condenser. A build up of dust or debris on the fins of the condenser will lead to a loss of cooling capacity.

The unit will retain its full rated capacity in ambient temperatures up to approximately +38°C.

Make sure the voltage of the power source meets the specified voltage, ±10%.

The plumbing connections are located on the rear of the unit and are labelled either SUPPLY and RETURN or OUTLET and INLET. These connections are ½ inch NPT. Connect the SUPPLY fitting to the inlet of the instrument being cooled. Connect the RETURN fitting to the outlet of the instrument being cooled.

To fill the reservoir remove the reservoir access panel by unscrewing the thumbscrews. Locate the reservoir plug (square nut). Remove the plug and fill the reservoir with clean cooling fluid.

Tap water is the recommended fluid for operation.

Operation

Before starting the unit, double check all electrical and plumbing connections. Make sure the circulating system has been filled with cooling fluid.

To start the unit, place the Main Power Switch to the on position. The Power Switch LED illuminates to indicate the system is operating. To turn the unit off, place the Power Switch to the off position.

The Cool LED indicates the status of the refrigeration system. It illuminates to indicate the refrigeration system is removing heat from the cooling fluid. As the operating temperature approaches the setpoint, the LED will extinguish.

When the unit is shut off, wait approximately five minutes before restarting. This allows time for the refrigeration pressures to equalize. If the pressures are not allowed to equalize, the compressor will short-cycle and no cooling will occur.

Periodic Maintenance

Periodically inspect the reservoir fluid. If cleaning is necessary, flush the reservoir with a cleaning fluid compatible with the circulating system and the cooling fluid.

The cooling fluid should be replaced periodically.

Periodic vacuuming of the condenser fins is necessary. The frequency of cleaning depends on the operating environment. We recommend a visual inspection of the condenser be made monthly after initial installation. After several months, the cleaning frequency will be established.

The unit has a pump strainer. If debris is in the system, the strainer will prevent the material from being drawn into the pump and damaging the pump vanes.

After initial installation, the strainer may become clogged. The strainer must be cleaned after the first week of installation. After this first cleaning, a monthly visual inspection is recommended. After several months, the frequency of cleaning will be established.

Before cleaning, disconnect the power cord from the power source and drain the reservoir.

Preface

Compliance

Products tested and found to be in compliance with the requirements defined in the EMC standards defined by 89/336/EEC as well as Low Voltage Directive (LVD) 73/23/EEC can be identified by the CE label on the rear of the unit. The testing has demonstrated compliance with the following directives:

LVD, 73/23/EEC	Complies with UL 3101-1:93
EMC, 89/336/EEC	EN 55011, Class A Verification EN 50082-1:1992 IEC 1000-4-2:1995 IEC 1000-4-3:1994 IEC 1000-4-4:1995

For any additional information refer to the Letter of Compliance that shipped with the unit (Declaration of Conformity).

Unpacking

Retain all cartons and packing material until the unit is operated and found to be in good condition. If the unit shows external or internal damage, or does not operate properly, contact the transportation company and file a damage claim. Under ICC regulations, this is your responsibility.

If this product has been modified to operate at 0°C or lower, it has been tested with a non-freezing fluid. Although the system has been drained, some residual fluid may remain. This will not hinder your unit's performance.

Warranty

Units have a warranty against defective parts and workmanship for one full year from date of shipment. See back page for more details.

After-sale Support

NESLAB is committed to customer service both during and after the sale. If you have questions concerning the operation of your unit, contact our Sales Department. If your unit fails to operate properly, or if you have questions concerning spare parts or Service Contracts, contact our Customer Service Department.

Before calling, please refer to the labels on the rear of the unit to obtain the following information:

- unit BOM number _____

- unit serial number _____

- pump type _____

Section I Safety

Warnings



Warnings are posted throughout the manual. These warnings are designated by an exclamation mark inside an equilateral triangle and text highlighted in bold. Read and follow these important instructions. Failure to observe these instructions can result in permanent damage to the unit, significant property damage, or personal injury or death.

Make sure you read and understand all instructions and safety precautions listed in this manual before installing or operating your unit. If you have any questions concerning the operation of your unit or the information in this manual, please contact our Sales Department (see After-sale Support).

Never place the unit in a location where excessive heat, moisture, or corrosive materials are present.

The unit construction provides extra protection against the risk of electrical shock by grounding appropriate metal parts. The extra protection may not function unless the power cord is connected to a properly grounded outlet. It is the user's responsibility to assure a proper ground connection is provided.

Never connect the SUPPLY or RETURN fitting to your building water supply or any water pressure source.

Never use flammable or corrosive fluids with this unit. Distilled and deionized water may be aggressive and cause material corrosion. Please contact NESLAB before subjecting this unit to prolonged exposure to distilled or deionized water.

Do not use automobile anti-freeze. Commercial anti-freeze contains silicates that can damage the pump seals. Use of automobile anti-freeze will void the manufacturer’s warranty.

Do not replace reservoir plug with a non-vented type or damage to the tank may occur.

For personal safety and equipment reliability, the following procedure should only be performed by a competent technician. Contact our Service Department for assistance (see Preface, After-sale Support).

Additional Warnings

In addition to the specific warnings listed on the previous page the following general warnings apply to your unit:

Performance of installation, operation, or maintenance procedures other than those described in this manual may result in a hazardous situation and may void the manufacturer's warranty.

Transport the unit with care. Sudden jolts or drops can damage the refrigeration lines.

Observe all warning labels.

Never remove warning labels.

Never operate damaged or leaking equipment.

Never operate the unit without cooling fluid in the reservoir.

Always turn off the unit and disconnect the power cord from the power source before performing any service or maintenance procedures, or before moving the unit.

Always empty the reservoir before moving the unit.

Never operate equipment with damaged power cords.

Refer service and repairs to a qualified technician.

Section II General Information

Description

The CFT Recirculating Chiller is designed to provide a continuous supply of cooling fluid at a constant temperature and volume.

The unit consists of an air-cooled refrigeration system, a sealable reservoir, recirculating pump, and a temperature controller.

Throughout the manual, you will be asked to consult the unit's serial number label or the pump identification label for specific information. Both labels are located on the rear of the unit.

Specifications

Cooling Capacity[1]	2500 Watts
Temperature Range[2]	+5°C to +30°C
Temperature Stability	±0.5°
Reservoir Volume *Liters* *Gallons*	 6.8 1.8
Unit Dimessions[3,4] (H x W X D) *Centimeters* *Inches*	 67.3 x 37.8 x 65.4 26½ x 14⅞ x 25¾
Power Requirements	208/230V, 60Hz 220/240V, 50Hz
Refrigerant	R134a
Pump Capacity	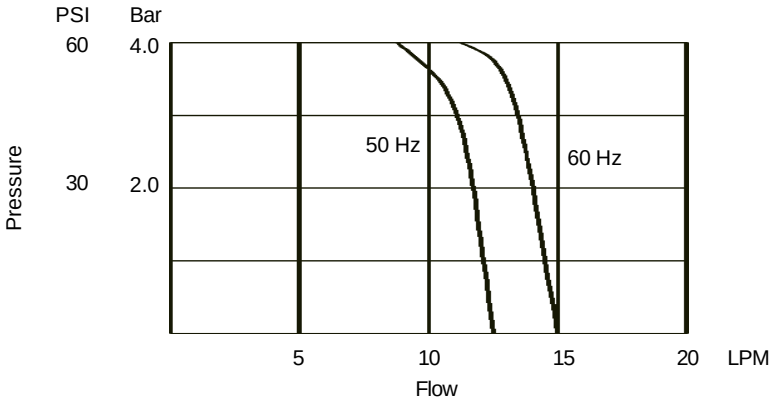

1. 2100 Watts at 50Hz. Cooling capacity obtained at 18°C. Cooling capacity will vary depending on fluid temperature, ambient temperature, and cooling fluid.
2. Temperature controller can display from 5°C to 30°C.
3. Unit height is measured from the floor to the top of the case. Add 1.3 centimeters (½ inch) to include the height of the thumbscrews on the reservoir access panel.
4. Unit depth is measured from the front of the case to the rear of the electrical enclosure on the back of the unit.

Section III Installation

Site

The unit should be located in a laboratory or clean industrial environment where ambient temperatures are inside the range of +13°C to +38°C.

Never place the unit in a location where excessive heat, moisture, or corrosive materials are present.

The unit has an air-cooled refrigeration system. Air is drawn through the front of the unit and discharged through rear and side panels. The unit must be positioned so the intake and discharge are not impeded. A minimum clearance of 45 centimeters (18 inches) on all vented sides is necessary for adequate ventilation. Inadequate ventilation will cause a reduction in cooling capacity and, in extreme cases, compressor failure.

Excessively dusty areas should be avoided and a periodic cleaning schedule should be instituted (see Section V, Cleaning).

The unit will retain its full rated capacity in ambient temperatures up to approximately +24°C. Derate the cooling capacity 1% for every 0.5°C above +24°C.

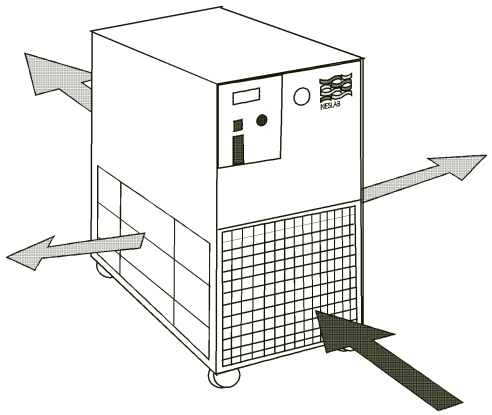

Direction of Air Flow

Air Intake Requirements

The approximate air intake required for the unit to retain its full rated capacity is 800 cubic feet per minute.

Electrical Requirements

Refer to Section II, Specifications, and to the serial number label on the rear of the unit for the specific electrical requirements of your unit.

We recommend a harmonized (HAR) grounded 3-conductor cord, type H05, rated 30 amps.

Connect L1 to 1TB1, L2 and N to 1TB3. Connect the grounding conductor to the grounding stud.

Make sure the voltage of the power source meets the specified voltage, ±10%.



The unit construction provides extra protection against the risk of electrical shock by grounding appropriate metal parts. The extra protection may not function unless the power cord is connected to a properly grounded outlet. It is the user's responsibility to assure a proper ground connection is provided.

The unit can operate with either 50 Hertz or 60 Hertz input frequency. To change the frequency remove the wrapper and locate terminal boards 1TB and 2TB at the rear of the unit. For 50 Hertz operation, connect 2TB2 to 1TB2. For 60 Hertz, connect 2TB2 to 1TB1.

Plumbing Requirements

Before installing the unit to an instrument that previously used tap water as a cooling fluid, flush the instrument several times to remove any rust or scale that has built up. The manufacturer of the instrument should be able to . recommend a cleaning fluid for their equipment.

The plumbing connections are located on the rear of the unit and are labelled SUPPLY and RETURN. The connections are ½ inch NPT.

Connect the SUPPLY fitting to the inlet of the instrument being cooled. Connect the RETURN fitting to the outlet of the instrument being cooled.



Never connect the fittings to your building water supply or any water pressure source.

Flexible tubing, if used, should be of heavy wall or reinforced construction. All tubing should be rated to withstand 80 psig at +30°C. Make sure all tubing connections are securely clamped. Avoid running tubing near radiators, hot water pipes, etc. If substantial lengths of tubing are necessary, insulation may be required to prevent loss of cooling capacity.

Tubing and insulation are available from NESLAB. Contact our Sales Department for more information (see Preface, After-sale Support).

It is important to keep the distance between the unit and the instrument being cooled as short as possible, and to use the largest diameter tubing practical. Tubing should be straight and without bends. If diameter reductions must be made, they should be made at the inlet and outlet of the instrument being cooled, not at the CFT.

If substantial lengths of cooling lines are required, they should be pre-filled with cooling fluid before connecting them to the unit.

Fluids

The selected fluid must have a viscosity of 50 centistokes or less at the lowest operating temperature.



Never use flammable or corrosive fluids with this unit. Distilled and deionized water may be aggressive and cause material corrosion. Please contact NESLAB before subjecting this unit to prolonged exposure to distilled or deionized water.

Tap water is the recommended fluid for normal operation, see Water Quality and Recommendations.

Below +8°C, a non-freezing fluid must be used. A mixture of tap water and laboratory grade ethylene glycol is suggested.



Do not use automobile anti-freeze. Commercial anti-freeze contains silicates that can damage the pump seals. Use of automobile anti-freeze will void the manufacturer's warranty.

Water Quality Standards and Recommendations

	Permissible(PPM)	Desirable(PPM)
Microbiologicals		
(algae,bacteria,fungi)	0	0
Inorganic Chemicals		
Calcium	<40	0.6
Chloride	250	<25
Copper	1.3	1.0
Iron	0.3	<0.1
Lead	0.015	0
Magnesium	<12	0.1
Manganese	0.05	<0.03
Nitrates\Nitrites	10 as N	0
Potassium	<20	0.3
Silicate	25	<1.0
Sodium	<20	0.3
Sulfate	250	<50
Hardness	17	<0.05
Total Dissolved Solids	50	10
Other Parameters		
pH	6.5-8.5	7-8
Resistivity	0.01*	0.05-0.1*

* Megohm-Cm (Compensated at 25C)

Unfavorably high total ionized solids (TIS) can accelerate the rate of galvanic corrosion. These contaminants can function as electrolytes which increase the potential for galvanic cell corrosion and lead to localized corrosion such as pitting which can be observed at the studs and on the outside surface of cooling coils. Eventually, the pitting will become so extensive that the coil will leak refrigerant into the water reservoir.

As an example, raw water in the United States averages 171 ppm (as NaCl). The recommended level for use in a water system is between 0.5 to 5.0 ppm (as NaCl).

Recommendation: Initially fill the tank with distilled/deionized water. Do not use untreated tap water as the total ionized solids level may be too high.

Maintain this water quality at a resistivity of between 1 to 10 megohm-cm (compensated at 25°C) by using a purification system. Although the initial fill may be as high as 10 megohm-cm (compensated at 25°C), the desired level for long time usage is 1 to 3 megohm-cm (compensated at 25°C).

The above two recommendations will reduce the electrolytic potential of the water and prevent or reduce the galvanic corrosion observed.

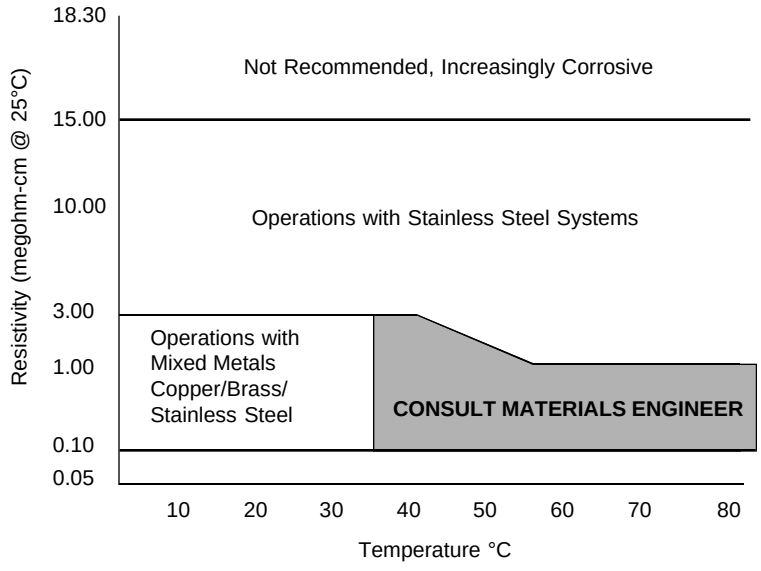

Water Quality Considerations

Filling Requirements

Remove the reservoir access panel by unscrewing the thumbscrews. Locate the reservoir plug (square nut). Remove the plug and fill the reservoir with clean cooling fluid, following the special considerations outlined in the following paragraphs.

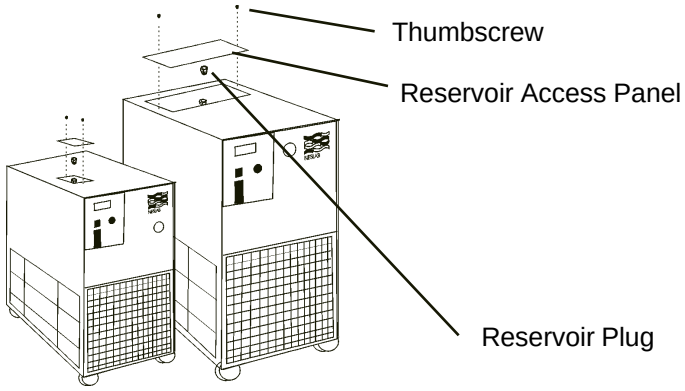

Reservoir Filling Locations (Typical)

Circulating to a closed system (closed to the atmosphere)
Fill the reservoir to the bottom of the fill hole threads. Since the reservoir capacity is small compared to many instruments being cooled, have extra cooling fluid on hand to keep the system topped off when external circulation is started.

NOTE: The tank in your unit has a vent which relieves pressure built up from thermal expansion of water. The vent is located on the reservoir plug. It activates when tank pressure reaches 3 - 5 psi.

Do not replace reservoir plug with an non-vented type or damage to the tank may occur.

Circulating to an open system (open to the atmosphere)
Fill the reservoir so ¾ of the fill hole threads are covered. Wrap the tank plug with Teflon® sealing tape. Replace the tank plug and tighten securely to prevent air entry.

When circulating cooling fluid to an open system, connect the SUPPLY and RETURN lines to the open tank. Secure the RETURN (suction) line below the fluid surface. The RETURN line should be submerged deep enough to avoid sucking air. Make sure the RETURN line is free of particles and debris that can block the flow of fluid. A baffle or screen may be required.

Section IV Operation

Start Up

Before starting the unit, double check all electrical and plumbing connections and make sure the circulating system (the CFT, the instrument being cooled, and the tubing that connects them) has been properly filled with cooling fluid.

To start the unit, place the POWER Switch to the ON position. The controller LEDs will illuminate.

Applying power to pins 1 and 2 on the Metrimate receptacle located on the rear of the unit starts the refrigeration system and the recirculation pump. See next page.

The COOL LED on the front panel indicate the status of the refrigeration system. It illuminates to indicate the refrigeration system is removing heat from the cooling fluid. As the operating temperature approaches the temperature setpoint, the LED will extinguish.

Temperature Controller

Temperature Adjustment

To display the temperature setpoint, press and hold the DISPLAY switch. To adjust the temperature setpoint, press and hold the DISPLAY switch and turn the ADJUST knob until the desired temperature setpoint is indicated on the digital display. Once the setpoint is adjusted, release the DISPLAY switch. The display will now indicate the temperature of the fluid in the reservoir.

NOTE: Inadvertent movement of the ADJUST knob, regardless of the position of the DISPLAY switch, will result in a change in the setpoint. This change will not be immediately reflected on the digital display, unless the DISPLAY switch is pressed. The digital display will eventually change as the unit reacts to the new setpoint.

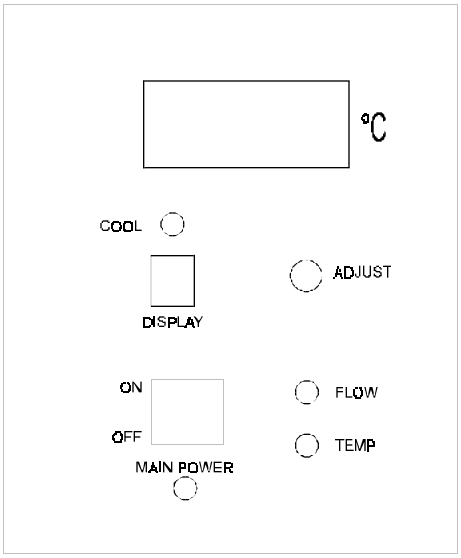

Controller

Shut Down

To turn the unit off, place the POWER Switch to the OFF position.

When the unit is shut off, wait approximately five minutes before restarting. This allows time for the refrigeration pressures to equalize. If the pressures are not allowed to equalize, the compressor will short-cycle (clicking sound) and no cooling will occur.

Fault Lights

Should the fluid flow drop below 1.6 liters per minute the FLOW lamp will illuminate and a signal will be sent to the Metrimate receptacle on the rear of the unit, see below.

Should the temperature of the fluid in the tank exceed what is set on the High Temperature Cutout (HTC), the TEMP lamp will illuminate and a signal will be sent to the Metrimate receptacle on the rear of the unit, see below. The HTC is factory preset at 30°C (86°F).

NOTE: The temperature scale on the HTC is in °F.

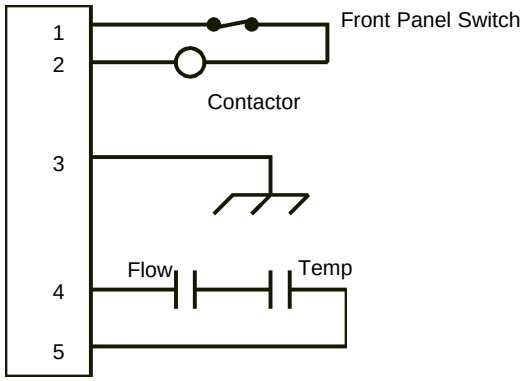

6-pin Metrimate Receptacle
Connector is made by AMP, Part Number 207153-1
Pin Part Number 745652-2

Section V Maintenance and Service



For personal safety and equipment reliability, the following procedure should only be performed by a competent technician. Contact our Service Department for assistance (see Preface, After-sale Support).

Service Contracts

NESLAB offers on-site Service Contracts that are designed to provide extended life and minimal down-time for your unit. For more information, contact our Service Department (see Preface, After-sale Support).

Draining the Reservoir

To drain the reservoir we recommend the use of a wet/dry vacuum. Remove the reservoir plug and carefully insert the wet/dry vacuum so as not to damage the cooling coils. **NOTE:** Tilting the unit more than 45° may allow compressor oil to seep into the suction line.

Cleaning

Reservoir

Periodically inspect the fluid inside the reservoir. If cleaning is necessary, flush the reservoir with a cleaning fluid compatible with the circulating system and the cooling fluid.

The cooling fluid should be replaced periodically. When operating at low temperatures, the concentration of water in the cooling fluid will increase over time, leading to a loss of cooling capacity.

Before changing the cooling fluid, raise the operating temperature of the unit to de-ice the cooling coils. Refer to Section III, Filling Requirements for instructions on replacing the cooling fluid.

Condenser

For proper operation, the unit needs to pull substantial amounts of air through a condenser. A build up of dust or debris on the fins of the condenser will lead to a loss of cooling capacity.

The lower front of the unit has a one-piece grille assembly. Gently pry the assembly off with a flathead screwdriver. Use care not to scratch the paint.

Periodic vacuuming of the condenser fins is necessary. The frequency of cleaning depends on the operating environment. It is recommended that a visual inspection of the condenser be made monthly after initial installation. After several months, the frequency of cleaning will be established.

Algae

To restrict the growth of algae in the reservoir, it is recommended that the reservoir cover be kept in place and that all circulation lines be opaque. This will eliminate the entrance of light which is required for the growth of most common algae.

NESLAB recommends the use of Chloramine-T, one gram per gallon.

Pump Strainer

If debris is in the system, the strainer will prevent the material from being drawn into the pump and damaging the pump vanes.

After initial installation, the strainer may become clogged with debris and scale. Therefore, the strainer must be cleaned after the first week of installation. After this first cleaning, a monthly visual inspection is recommended. After several months, the frequency of cleaning will be established.

Before cleaning the strainer, disconnect the power cord from the power source and drain the reservoir.

Remove the wrapper from the unit. Unscrew the cannister on the pump suction line and remove the screen.

Clean the screen by rinsing it with water.

When the screen is clean, replace it in the strainer, tighten the cannister and replace the wrapper. Refer to Section III, Filling Requirements for instructions on replacing the cooling fluid.

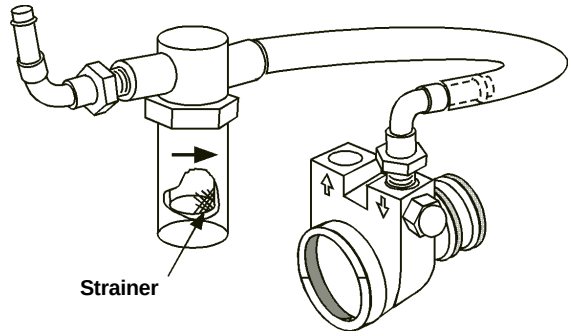

Pump Motor Lubrication

PD pump motors require periodic lubrication. Refer to the pump label on the rear of the unit to identify the type of pump in your unit.

PD pumps use sleeve type bearings with large reservoirs. Oiling instructions are generally posted on each motor. In the absence of instructions, add approximately 30 to 35 drops of SAE 20 non-detergent oil to each bearing on the following schedule (SAE 20 = 142 CS viscosity):

Duty Cycle	Oiling Frequency
Continuous	Once every year
Intermittent	Once every 2 years
Occasional	Once every 5 years

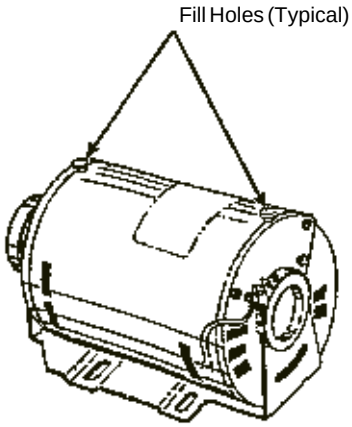

Pressure Relief Valve

A pressure relief valve establishes the maximum operating pressure of the unit. If the pressure of the fluid leaving the pump exceeds the valve setting, the relief valve will bypass the fluid within the unit to relieve the pressure. The relief valve does not determine the actual operating pressure; the operating pressure is determined by the back pressure of the system.

If an adjustment is necessary, contact our Customer Service Department.

Section VI Troubleshooting

Checklist

Unit will not start

Check the line cord, make sure it is plugged in.

Check the voltage of the power source. Make sure it is within the rated voltage of the unit, ±10%.

Unit will not circulate fluid

Check the reservoir level. Fill, if necessary.

Make sure the pump has been purged.

Check the pressure gauge. If the reading is 60 psig, check the instrument being cooled for restrictions in the cooling line.

Check the pump strainer. A clogged strainer can starve the pump.

Inadequate temperature control

If the temperature continues to rise, make sure the heat load of the instrument being cooled does not exceed the rated specification. (See Section II, Specifications).

Make sure the air intake and discharge are not impeded and the ambient temperature does not exceed +38°C.

Make sure the condenser is free of dust and debris. (See Section V, Cleaning.)

If the compressor short-cycles (a clicking sound), check the line voltage. It should be within the 10% of the specified voltage. Wait 5 minutes before restarting the unit.

Service Assistance

If, after following these troubleshooting steps, your unit fails to operate properly, contact our Service Department for assistance (see Preface, After-sale Support). Before calling, please refer to the serial number label on the rear of the unit to obtain the following information:

- *unit BOM number*
- *unit serial number*
- *voltage of unit*
- *voltage of power source*

Blank page.

Appendix International Quick Reference Guides

CFT - Umlaufkühler Kurzbedienungsanleitung

Installation
Das Gerät verfügt über ein luftgekühltes Kühlsystem. Die Luft wird an der Vorderseite angesaugt und strömt an den Seitenwänden und an der Rückseite aus. Das Gerät muß so plaziert werden, daß weder die Ansaug- noch die Ausströmungsöffnungen blockiert sind. Bei ungenügender Ventilation wird die Kühlleistung reduziert und kann in extremen Situationen zu einem Ausfall des Kühlsystems (Kompressors) führen.

Aufstellorte mit hoher Staubentwicklung sollten vermieden werden, und es sollte eine regelmäßige Reinigung des Gerätes durchgeführt werden. Um einwandfrei zu funktionieren, muß das Gerät große Luftmengen durch den Kondensor ansaugen. Bei Staub- und Schmutzablagerungen auf dem Kondensorheizkörper kommt es zu einem Verlust von Kühlleistung.

Das Gerät behält seine maximale Kühlleistung bis zu einer Umgebungstemperatur von ca. +38°C.

Vergewissern Sie sich, daß die Spannung Ihrer Stromanschlüsse mit der für das Gerät vorgesehenen Spannung übereinstimmt (±10%).

Die Schlauchanschlüsse (1/2 Zoll FPT) des Gerätes befinden sich an der Rückseite und sind mit SUPPLY und RETURN bezeichnet. Bitte entfernen Sie die Gummiabdichtung von beiden Anschlüssen. Schließen Sie den SUPPLY-Anschluß an den Eingang Ihres Instruments und den RETURN-Anschluß an den Ausgang Ihres Instruments an.

Um das Reservoir zu füllen, entfernen Sie den Reservoir-Schutzdeckel, indem Sie die Flügelschrauben lösen. Entfernen Sie den Reservoirverschluß (viereckige Mutter) und füllen Sie das Reservoir mit sauberer Kühlflüssigkeit.

Für den Betrieb im Arbeits-Temperaturbereich von +8°C bis +30°C empfiehlt NESLAB Leitungswasser als Kühlmittel.

Inbetriebnahme
Vor Inbetriebnahme des Gerätes vergewissern Sie sich bitte, daß die elektrischen Anschlüsse und die Rohr- u. Schlauchanschlüsse sachgemäß installiert sind und daß das gesamte System mit Kühlflüssigkeit gefüllt ist.

Um das Gerät einzuschalten, müssen Sie den Hauptschalter auf „ON“ stellen. Der Schalter leuchtet auf, wenn das Gerät in Betrieb ist. Um das Gerät abzuschalten, muß der Hauptschalter auf „OFF“ gestellt werden.

Die „Cool“ LED-Anzeige an der Anzeigetafel auf der Vorderseite des Gerätes leuchtet auf, so lange das Kühlsystem der Kühlflüssigkeit Wärme entzieht. Ist die gewünschte Temperatur erreicht (setpoint), erlischt die LED-Anzeige.

Nach dem Ausschalten des Gerätes sollten Sie vor dem Wiedereinschalten ca. 5 Minuten warten, damit das Kühlsystem einen Druckausgleich durchführen kann. Beachtet man diese Wartezeit nicht, kommt es zu kurzen Schaltfrequenzen des Kompressors und eine Kühlung ist nicht möglich.

Einstellung der Analog-Temperatursteuerung
Um die Temperatur einzustellen (setpoint), drehen Sie den °C-Schalter an der Vorderseite des Gerätes auf die gewünschte Temperatur.

Einstellung der Digital-Temperatursteuerung
Um sich den Temperatur-Setpoint anzeigen zu lassen, drücken Sie den DISPLAY-Schalter und halten Sie ihn gedrückt. Um den Temperatur-Setpoint einzustellen, drücken Sie den Display-Schalter, halten diesen, und drehen gleichzeitig den ADJUST-Schalter so lange, bis die gewünschte Temperatur in der Digitalanzeige angezeigt wird. Wenn die Temperatur eingestellt ist, lassen Sie den Display-Schalter los. Die Digitalanzeige zeigt dann die Temperatur der Kühlflüssigkeit im Reservoir an.

Wartung
Überprüfen Sie regelmäßig die Kühlflüssigkeit im Reservoir. Sollte eine Säuberung notwendig sein, spülen Sie das Reservoir mit einer speziellen Reinigungsflüssigkeit, die mit dem Umlaufsystem und der Kühlflüssigkeit kompatibel ist.

Das Kühlmittel sollten Sie regelmäßig erneuern.

Regelmäßiges Absaugen des Kondensor-Heizkörpers ist erforderlich. Die Reinigungshäufigkeit hängt von der Betriebsumgebung ab. Eine monatliche Überprüfung des Kondensors ist empfehlenswert. So werden Sie nach einigen Monaten einen Reinigungsrhythmus gefunden haben.

Geräte mit PD-Pumpen sind mit einem Pumpenfilter ausgestattet. Der Filter sorgt dafür, daß kleine Teilchen und Schmutzablagerungen nicht in die Pumpe gelangen und so die Pumpflügel beschädigen können.

Nach der Erstinstallation kann es zu einer Blockierung des Filters kommen. Die erste Reinigung sollte daher nach einer Woche erfolgen. Danach empfehlen wir eine monatliche Überprüfung des Filters. So können Sie nach einiger Zeit abschätzen, wie oft der Filter gereinigt werden muß.

Bevor Sie den Filter reinigen, ziehen Sie den Netzstecker aus der Steckdose und leeren Sie das Reservoir.

CFT Serie Kvik Referance

Installation:
CFT Serien er luftkølet. Luft trækkes ind fra fronten og ledes ud på bagsiden. Systemet skal placeres således, at der frit kan indsuges og udledes luft. Såfremt systemet ikke har tilgang til fri luftcirkulation, ind og ud, nedsættes kølekapaciteten og i ekstreme tilfælde fejler kompressoren.

Steder med meget støv skal undgåes, og periodisk rensning skal udføres, hvis utilsigtet nedbrud skal undgåes. Opbygning af støv vil medføre fald i kølekapasiteten og i værste fald overophedning af systemet.

Operationstemperatur ved 100% udnyttelse er fra stuetemperatur til+38° C under forudsætning af, at netspændingen er den nominelle 240V ±10%.

Slangetilgang er på bagsiden mærket „SUPPLY“ (ind) og „RETURN“ (ud). Skruegangen er ½“ FPT-gevind. Inden tilslutning af fittings fjernes plaststøvkappen fra rørstudsene. „RETURN“ tilsluttes det emne, som skal køles.

Fyldning af reservoiret foregår ved at fjerne panelet, som er forsynet med fingerskruer, og påfyld egnet rent kølevæske.

Betjening:
Før opstart checkes elektriske forbindelser, slangeforbindelser og kølevæske stand.

Systemet startes ved tryk på kontakten på forsiden, hvorefter denne vil lyse og systemet gå igang. Skal systemet standses trykkes på knappen igen.

Køledioden på frontpanelet angiver status på kølesystemet, den lyser ved køling og slukker, når den indstillede temperatur er nået.

Hvis systemet slukkes, skal der ventes minimum 5 min., før der tændes igen, ellers virker kompressoren ikke optimalt.

Analog temperatur kontrol:
Drej ^{0}C tasten til den ønskede temperatur og lad systemet stabilisere sig.

Digital temperatur kontrol:
Tryk på „DISPLAY“ tasten for at se den indstillede temperatur. Indstilling af ny temperatur, tryk på „DISPLAY“ og drej på „ADJUST“ indtil den rigtige temperatur vises, slip derefter „DISPLAY“ tasten. Skærmen vil nu vise den aktuelle temperatur i badet.

Periodisk vedligeholdelse:
Check standen af kølevæske periodisk, før skift af væske indstilles temperaturen på „de-ice“. Check med mellemrum vakuummet på pumpesiden, rens systemet og check for aflejringer, vækst, utætheder og evt. filtre. Husk åben aldrig instrumentet uden strømmen er afbrudt, og strømkablet er taget ud!

CFT-Series, Handleiding snelle installatieprocedures

Installatie
Het apparaat heeft een luchtgekoeld koelsysteem. Lucht wordt aangezogen aan de voorkant van het apparaat en weer vrijgegeven via de achterkant van het apparaat. Plaats het apparaat op een zodanige manier, dat de luchttoevoer en afvoer niet worden belemmerd. Inadequate ventilatie kan leiden tot afname van koelcapaciteit en, in extreme gevallen, tot het niet functioneren van de compressor.

Het is aan te raden stoffige ruimtes te vermijden en de condensor regelmatig schoon te houden. Voor een juiste werking dient het apparaat een voldoende hoeveelheid lucht aan te zuigen door middel van de condensor. Een opeenhoping van stof of vuil op de condensor kan leiden tot een verlies van koelcapaciteit.

Het apparaat behoudt haar integrale capaciteit bij een omgevingstemperatuur tot ongeveer +38 Gr.C.

Let erop dat de netspanning gelijk is aan het aangegeven voltage, ±10%.

De slangaansluitingen zijn bevestigd aan de achterkant van het apparaat en zijn voorzien van het label SUPPLY en RETURN. Deze aansluitingen zijn een 1/2 inch FPT. Verwijder de plastic beschermingspluggen van beide slangaansluitingen.

Bevestig de SUPPLY plug met de ingang van het apparaat dat gekoeld wordt.

Bevestig de RETURN plug aan de uitgang van het apparaat dat gekoeld wordt.

Om het reservoir te vullen, gelieve het toegangspaneel te verwijderen door middel van het losdraaien van de duimschroeven. Zoek de reservoirplug. Verwijder de plug en vul het reservoir met koelvloeistof.

Kraanwater wordt in het algemeen aanbevolen wanneer u bij temperaturen werkt van +8 Gr.C.

Operationeel gebruik.
Alvorens het apparaat in gebruik te nemen, gelieve eerst alle elektrische- en slangaansluitingen te controleren. Tevens dient u te controleren of het systeem gevuld is met koelvloeistof.

Om het apparaat te starten, gelieve de schakelaar op “ON” te zetten. De schakelaar zal oplichten als teken dat het systeem in werking is gesteld. Om het apparaat uit te schakelen, gelieve de schakelaar op “OFF” te zetten.

De “Cool LED” aan de voorkant duidt de status aan van het koelsysteem. Het zal oplichten indien het koelsysteem warmte verwijdert van de koelvloeistof. Als de aangegeven temperatuur de set-point bereikt, zal de LED verdwijnen.

Wanneer het apparaat uitgeschakeld is, gelieve ongeveer 5 minuten te wachten alvorens u het apparaat weer in werking stelt. Deze tijd is nodig om de koeldruk gelijk te stellen.

Analog Controller Temperature Adjustment
Om de temperatuur set-point aan te passen, gelieve de Gr.C. knop aan de voorkant van het apparaat te draaien naar de gewenste temperatuur.

Digital Controller Temperature Adjustment
Om de temperatuur set-point af te kunnen lezen, houdt u de DISPLAY knop ingedrukt. Om de temperatuur set-point aan te passen, houdt u de DISPLAY knop ingedrukt en draait u de ADJUST knop, totdat de gewenste temperatuur set-point af te lezen is van de display. Als de set-point is aangepast, kunt u de DISPLAY knop weer loslaten De display zal nu de temperatuur weergeven van het koelvloeistof in het reservoir.

Periodiek Onderhoud

Het reservoir dient regelmatig gecontroleerd te worden. Indien reiniging noodzakelijk is, zal het reservoir schoongespoeld moeten worden met een vloeistof, welke gelijk is aan het koelsysteem en het koelvloeistof.

Het koelvloeistof dient periodiek vervangen te worden.

Het periodiek luchtvrij maken van de condensor is noodzakelijk. Het aantal malen dat dit moet gebeuren, hangt af van de omgeving waar het apparaat staat opgesteld en wordt gebruikt. Wij raden een algemene maandelijkse inspektie van de condensor aan na de installatie. Na enkele maanden zal duidelijk zijn hoe vaak men het apparaat moet reinigen.

Apparaten met PD-pompen hebben een filter. Indien vuil in het systeem aanwezig is, zal de filter ervoor zorgdragen dat het materiaal niet in de pomp terecht komt en daardoor de pomp niet wordt beschadigd.

Nadat het apparaat geinstalleerd is, kan de filter verstopt raken. De filter zal schoongemaakt moeten worden in de eerste week na installatie. Nadat dit gebeurd is, is een maandelijkse inspektie aan te raden. Na enkele maanden zal duidelijk zijn hoe vaak de filter gereinigd moet worden.

Alvorens de filter te reinigen, gelieve het apparaat uit te schakelen en het reservoir te ledigen.

Kortfattad Bruksanvisning för CFT Serie

Installation
Maskinen har ett luft kylt kylnings system. Luft tas in på framsidan av maskinen och släpps ut på sidan och baksidan av maskinen. Ställ maskinen så att intaget och uttaget inte är blockerade. Otillräcklig ventilation leder till minskad kylningskapacitet och i vissa fall kan kompressorn gå sönder.

Undvik dammiga områden och rengör maskinen periodiskt. För att fungera ordentligt måste mycket luft passera genom kondensorn. Damm och smuts i kondensorn leder till minskad kylnings kapacitet.

Maskinen har full kylningskapacitet upp till en temperatur av +100°F (38°C).

Röranslutning finns på baksidan av maskinen och har följande beskrivning: SUPPLY och RETURN. Anslutningarna är 1/2 inch FPT. Ta bort de skyddande plast bitarna från röranslutningarna. Anslut SUPPLY kopplingen till intaget av din anordning och RETURN kopplingen till uttaget.

Lösgör skruvarna och ta bort luckan för att fylla tanken. Ta bort tank pluggen och fyll tanken med ren kylnings vätska.

Vanligt kran vatten är den rekommenderade vätskan vid en temperatur mellan +8°C och +80°C.

Användning
Innan maskinen startas, kontrollera alla elektriska och alla rör anslutningar. Se till att cirkulations systemen har fyllts med vätska.

Sätt start knappen på ON för att starta maskinen. COOL och IDLE på framsidan visar statusen på kylningssystemet. Cool lyser när värme tas bort från köldmedlet. När temperaturen närmar sig den förbestämda temperaturen kommer de två att växla.

Vänta 5 minuter efter att maskinen stämgts av innan den sätts på igen för att låta kylningstrycken att utjämnas. Ingen kylning kommer att utföras om inte trycken tillåts att utjämnas.

Analog Kontroll, Temperatur Ändring
För att ändra den önskade förbestämda temperaturen, vrid °C knappen på framsidan av maskinen tills den önskade temperaturen är nådd.

Digital Kontroll, Temperatur Ändring
Håll Display knappen intryckt för att visa den önskade temperaturen. Håll Display knappen intryckt och vrid Adjust knappen för att ändra den önskade temperaturen. Släpp Display knappen efter att den önskade temperaturen visas på kontroll panelen. Temperaturen på vätskan i tanken visas nu på kontroll panelen.

Periodiskt Underhåll
Inspektera vätskan i tanken periodiskt. Om rengöring är nödvändigt, spola tanken med en rengörings vätska som är förenlig med cirkulationssystemet och kylvätskan.

Kylvätskan bör bytas periodvis.

Periodisk rengöring av kondensorn är nödvändig. Hur ofta rengöring är nödvändig beror på miljön. Vi rekommenderar en visuell inspektion av kondensorn varje månad efter installation. Efter flera månader kan det avgöras hur ofta kondensorn måste rengöras i framtiden.

Maskiner med PD pumpar har ett filter. Filtret måste rengöras efter en veckas användning. Efter första rengöringen bör filtret inspekteras varje månad. Efter flera månader kan det avgöras hur ofta filtret måsta rengöras.

Innan filtret rengörs, drag ur kontakten och töm tanken.

All annan information inklusive felsökning finns beskriven i instruktions manualen.

NOTICE D'UTILISATION
REFROIDISSEURS TYPE CFT

INSTALLATION
Ces appareils ont un système de réfrigération refroidi par air. L'air est aspiré sur le devant et rejeté à l'arrière et sur les côtés

Positionner l'appareil afin que l'admission et l'émission ne soient pas obstruées. Une ventilation insuffisante serait la cause d'une réduction de la capacité de refroidissement, voire, d'une défaillance du compresseur.

Une zone excessivement poussièreuse le nettoyage périodique est recommandé. En mode de fonctionnement, l'appareil aspire de l'air à travers le condenseur. De la poussière et des particules sur la grille atténueraient sa capacité de refroidissement.

L'appareil conserve sa pleine puissance de refroidissement sur une plage de température allant de l'ambiante à + 38°C.

S'assurer que l'alimentation électrique soit celle requise à ±10%.

Les connections, d'un diamètre 0.5 pouce FPT, sont situées à l'arrière de l'appareil et sont référencées " SUPPLY " et " RETURN ".. Retirer les embouts plastiques. Connecter le tuyau enfiché sur " SUPPLY " vers l'entrée de l'équipement et celui sur " RETURN " vers la sortie.

Pour remplir le réservoir, ôter la tape à l'aide des deux vis.

MISE EN ROUTE
Vérifier les connections électriques, les tuyaux d'eau et le niveau de remplissage du liquide.

Mettre en route en appuyant sur " ON ". Un voyant s'allume qui indique que l'appareil est en fonctionnement. Pour l'éteindre, appuyer sur " OFF ".

Le voyant LED " Cool " allumé indique le mode de fonctionnement du système de réfrigération. Lorsque la température requise est atteinte, ce voyant s'éteint.

Après avoir éteint l'appareil, attendre environ cinq minutes avant de le rallumer, pour un bon équilibrage des pressions.Autrement, le cycle au niveau du compresseur serait trop bref et le refroidissement n'aurait pas lieu.

REGLAGE DU CONTROLEUR DE TEMPERATURE ANALOGIQUE
Tourner le potentiomètre situé à l'avant jusqu'à ce que la température désirée coïncide avec la graduation.

REGLAGE DU CONTROLEUR DE TEMPERATURE NUMERIQUE
Pour afficher la température souhaitée, maintenir appuyé l'interrupteur et tourner le bouton de réglage jusqu'à ce que la température souhaitée soit affichée. Relâcher ensuite l'interrupteur. L'affichage indique alors la température du fluide dans le réservoir.

MAINTENANCE PREVENTIVE
Vérifier régulièrement le niveau du réservoir,

Changer de temps à autre le liquide utilisé,

En cas de nettoyage, rincer avec un produit de lavage compatible,

Avant de changer de liquide, recirculer à une température plus élevée pour réchauffer le serpentin,

Nettoyer régulièrement selon les conditions de travail la grille d'aspiration. Nous recommandons d'effectuer la première inspection du condenseur un mois après l'installation,

Les modèles fonctionnant avec des pompes type PD sont équipés d'un filtre qui retient les impuretés. Il est recommandé de nettoyer ce filtre après la première semaine et, ensuite, une fois par mois. Ce nettoyage s'effectue après avoir débranché l'appareil et vidangé le réservoir

PROCEDIMIENTOS DE OPERACION DE REFERENCIA RAPIDA
PARA LA SERIE CFT

INSTALACION

La unidad tiene un sistema de refrigeración por aire. El aire es dirigido hacia el frontal de la unidad y se descarga por la parte trasera y lateral. Sitúe la unidad para no impedir la entrada y descarga. Una ventilación inadecuada causará una reducción en la capacidad de enfriamiento y, en casos extremos, un fallo en el compresor.

Deben evitarse las zonas excesivamente polvorientas y debe instituirse un calendario de limpiezas periódicas. Para un funcionamiento adecuado, la unidad necesita empujar una cantidad sustancial de aire a través de un condensador. Un cúmulo de polvo o residuos en las aletas del condensador ocasionaría una pérdida de capacidad de enfriamiento.

La unidad retendrá su capacidad completa en temperaturas ambiente de hasta aproximadamente 38°C.

Asegúrese de que el voltaje de la fuente de energía sea igual que el voltaje especificado, ±10%.

Las conexiones de tuberías están situadas en la parte trasera de la unidad y están marcadas como SUPPLY y RETURN. Estas conexiones son 1/2" FPT. Saque los protectores de plástico de ambas conexiones de tuberías. Conecte el adaptador SUPPLY en la entrada del instrumento que se quiere enfriar. Conecte el adaptador RETURN a la salida del instrumento que se quiere enfriar.

Para llenar el reservorio, saque el panel de acceso al reservorio desatornillando los tornillos. Localice el conector del reservorio (tuerca cuadrada). Saque el conector y llene el reservorio con fluido refrigerante limpio.

Se recomienda el agua corriente como fluido para operar desde +8 ºC hasta +30 ºC.

OPERACION

Antes de poner en marcha la unidad, compruebe todas las conexiones eléctricas y de tuberías. Asegúrese de que el sistema circulador se ha llenado con fluido refrigerante.

Para poner en marcha la unidad, ponga el interruptor de encendido en posición ON. El interruptor de encendido se iluminará para indicar que el sistema está funcionando. Para apagarlo, ponga el interruptor de encendido en posición OFF.

El LED Cool del panel frontal indica la situación del sistema de refrigeración. Se ilumina para indicar que el sistema de refrigeración está eliminando calor del fluido refrigerante. A medida que la temperatura de funcionamiento se aproxima al punto fijado, el LED se extinguirá.

Cuando se apaga la unidad, espere aproximadamente cinco minutos antes de volver a ponerla en marcha. Esto da tiempo para que las presiones de refrigeración se ecualicen. Si no se permite ecualizarse las presiones, el compresor se cortocicuitará y no enfriará.

AJUSTE DE LA TEMPERATURA CON EL CONTROLADOR ANALOGICO

Para fijar el punto de ajuste de la temperatura, gire el dial ºC situado en el frontal de la unidad hasta la temperatura deseada.

AJUSTE DE LA TEMPERATURA CON EL CONTROLADOR DIGITAL

Para que el punto de ajuste de temperatura aparezca en pantalla, mantenga presionado el interruptor DISPLAY. Para fijar el punto de ajuste de temperatura, mantenga presionado el interruptor DISPLAY y gire el botón ADJUST hasta que la pantalla digital indique el punto de ajuste de temperatura deseado. Una vez fijado el punto de ajuste, suelte el interruptor DISPLAY. La pantalla indicará la temperatura del fluido en el reservorio.

MANTENIMIENTO PERIODICO

Inspeccione periódicamente el fluido del reservorio. Si es necesaria una limpieza, rocíe el reservorio con un fluido de limpieza compatible con el sistema de circulación y el fluido refrigerante.

El fluido refrigerante debe sustituirse periódicamente.

Es necesario un vaciado periódico de las aletas del condensador. La frecuencia de limpieza depende del entorno en que funciona el aparato. Recomendamos una inspección visual mensual del condensador después de la instalación inicial. Después de varios meses, quedará establecida la frecuencia de limpieza.

Las unidades con bombas PD tienen un filtro. Si hay residuos en el sistema, el filtro prevendrá que el material entre en la bomba y dañe las paletas de la bomba.

Después de la instalación inicial, el filtro puede bloquearse. El filtro debe limpiarse después de la primera semana de la instalación. Después de esta primera limpieza, se recomienda una inspección visual mensual. Después de varios meses, se establecerá la frecuencia de limpieza.

Antes de limpiar el filtro, desenchufe el aparato y vacíe el reservorio.

WARRANTY

NESLAB Instruments, Inc. warrants for 12 months from date of shipment any NESLAB unit according to the following terms.

Any part of the unit manufactured or supplied by NESLAB and found in the reasonable judgment of NESLAB to be defective in material or workmanship will be repaired at an authorized NESLAB Repair Depot without charge for parts or labor. The unit, including any defective part must be returned to an authorized NESLAB Repair Depot within the warranty period. The expense of returning the unit to the authorized NESLAB Repair Depot for warranty service will be paid for by the buyer. NESLAB's responsibility in respect to warranty claims is limited to performing the required repairs or replacements, and no claim of breach of warranty shall be cause for cancellation or recision of the contract of sales of any unit.With respect to units that qualify for field service repairs, NESLAB's responsibility is limited to the component parts necessary for the repair and the labor that is required on site to perform the repair. Any travel labor or mileage charges are the financial responsibility of the buyer.

The buyer shall be responsible for any evaluation or warranty service call (including labor charges) if no defects are found with the NESLAB product.

This warranty does not cover any unit that has been subject to misuse, neglect, or accident. This warranty does not apply to any damage to the unit that is the result of improper installation or maintenance, or to any unit that has been operated or maintained in any way contrary to the operating or maintenance instructions specified in NESLAB's Instruction and Operation Manual. This warranty does not cover any unit that has been altered or modified so as to change its intended use.

In addition, this warranty does not extend to repairs made by the use of parts, accessories, or fluids which are either incompatible with the unit or adversely affect its operation, performance, or durability.

NESLAB reserves the right to change or improve the design of any unit without assuming any obligation to modify any unit previously manufactured.

THE FOREGOING EXPRESS WARRANTY IS IN LIEU OF ALL OTHER WARRANTIES, EXPRESSED OR IMPLIED, INCLUDING BUT NOT LIMITED TO WARRANTIES OR MERCHANTABILITY AND FITNESS FOR A PARTICULAR PURPOSE.

NESLAB'S OBLIGATION UNDER THIS WARRANTY IS STRICTLY AND EXCLUSIVELY LIMITED TO THE REPAIR OR REPLACEMENT OF DEFECTIVE COMPONENT PARTS AND NESLAB DOES NOT ASSUME OR AUTHORIZE ANYONE TO ASSUME FOR IT ANY OTHER OBLIGATION.

NESLAB ASSUMES NO RESPONSIBILITY FOR INCIDENTAL, CONSEQUENTIAL, OR OTHER DAMAGES INCLUDING, BUT NOT LIMITED TO LOSS OR DAMAGE TO PROPERTY, LOSS OF PROFITS OR REVENUE, LOSS OF THE UNIT, LOSS OF TIME, OR INCONVENIENCE.

This warranty applies to units sold in the United States. Any units sold elsewhere are warranted by the affiliated marketing company of NESLAB Instruments, Inc. This warranty and all matters arising pursuant to it shall be governed by the law of the State of New Hampshire, United States. All legal actions brought in relation hereto shall be filed in the appropriate state or federal courts in New Hampshire, unless waived by NESLAB.

CFT Series
Recirculating Chiller

NESLAB Manual P/N U00362
Rev. 12/11/97

Instruction and Operation Manual

NESLAB online

Product Service Information, Electronic Catalog,
Applications Notes, MSDS Forms, e-mail.

(603)427-2490

Set modem to 8-N-1 protocol, 1200 - 14400 baud

Voice Info: (800) 4-NESLAB

Comments on this manual can be sent to:

NESLAB@lifesciences.com

or visit our Web page at:

http://www.neslabinc.com

CFT Series Recirculating Chiller

PREFACE

Compliance 3
Unpacking 3
Warranty 3
After-sale Support 3

SECTION I
Safety

Warnings 4
Additional Warnings 5

SECTION II
General Information

Description 6
Specifications 6
Cooling Capacity 8
Pump Capacity 8

SECTION III
Installation

Site 9
Electrical Requirements 10
Plumbing Requirements 10
Fluids 11
Water Quality Standards and Recommendations 12
Filling Requirements 14

SECTION IV
Operation

Start Up 15
Analog Temperature Controller 15
Digital Temperature Controller 16
Changing a Value 16
Controller Displays 17
Operator's Loop 17
Setup Loop 18
Pressure Relief Valve 19
High Temperature Cutout (Optional) 19
CFT-300 High/Low Pressure Cutouts 19
CFT-150 High Pressure Cutout 19
Heater Package (Optional) 20
External Pressure Regulator (Optional) 21

SECTION V
Maintenance & Service

Service Contracts 22
Draining the Reservoir 22
Cleaning 22
Algae 23
Pump Strainer 23
Pump Lubrication 24
Hoses 24
Suction Discharge Pressure/Speed Check 24

SECTION VI
Troubleshooting

Checklist 25
Service Assistance 25
Pump Flow Diagram 26

WARRANTY

CFT Series Quick Reference Operating Procedures

Installation

The unit has an air-cooled refrigeration system. Air is drawn in the front of the unit and discharged through rear and side. Position the unit so the intake and discharge are not impeded. Inadequate ventilation will cause a reduction in cooling capacity and, in extreme cases, compressor failure.

Excessively dusty areas should be avoided and a periodic cleaning schedule should be instituted. For proper operation, the unit needs to pull substantial amounts of air through a condenser. A build up of dust or debris on the fins of the condenser will lead to a loss of cooling capacity.

The unit will retain its full rated capacity in ambient temperatures up to approximately +24°C.

Make sure the voltage of the power source meets the specified voltage, ±10%.

The plumbing connections are located on the rear of the unit and are labelled either SUPPLY and RETURN or OUTLET and INLET. These connections are ½ inch FPT, ¾ inch FPT for CFT-150s with CP-55 pumps and CFT-300s. Remove the plastic protective plugs from both plumbing connections. Connect the OUTLET/SUPPLY fitting to the inlet of the instrument being cooled. Connect the INLET/RETURN fitting to the outlet of the instrument being cooled.

To fill the reservoir remove the reservoir access panel by unscrewing the thumbscrews. Locate the reservoir plug (square nut). Remove the plug and fill the reservoir with clean cooling fluid.

Filtered tap water is the recommended fluid for operation from +8°C to +30°C. Below +8°C, a non-freezing fluid must be used. A mixture of tap water and laboratory grade ethylene glycol is suggested.

Operation

Before starting the unit, double check all electrical and plumbing connections. Make sure the circulating system has been filled with cooling fluid.

To start the unit, place the Power Switch to the on position. The Power Switch illuminates (except for the CFT-150) to indicate the system is operating. To turn the unit off, place the Power Switch to the off position.

The Cool LED indicates the status of the refrigeration system. It illuminates to indicate the refrigeration system is removing heat from the cooling fluid. As the operating temperature approaches the setpoint, the LED will extinguish.

When the unit is shut off, wait approximately five minutes before restarting. This allows time for the refrigeration pressures to equalize. If the pressures are not allowed to equalize, the compressor will short-cycle and no cooling will occur.

Temperature Adjustment

To display the temperature setpoint, press and hold the NEXT ENTER button on the controller . To adjust the temperature setpoint, press the YES or NO key until the desired temperature setpoint is indicated on the digital display. Once the setpoint is adjusted, press the NEXT ENTER key twice. The display will now indicate the temperature of the fluid in the reservoir.

Periodic Maintenance

Periodically inspect the reservoir fluid. If cleaning is necessary, flush the reservoir with a cleaning fluid compatible with the circulating system and the cooling fluid.

The cooling fluid should be replaced periodically. When operating at low temperatures, the concentration of water in the cooling fluid will increase over time, leading to a loss of cooling capacity.

Before changing the cooling fluid, raise the unit's operating temperature to de-ice the cooling coils.

Periodic vacuuming of the condenser fins is necessary. The frequency of cleaning depends on the operating environment. We recommend a visual inspection of the condenser be made monthly after initial installation. After several months, the cleaning frequency will be established.

Units with PD pumps have a strainer. If debris is in the system, the strainer will prevent the material from being drawn into the pump and damaging the pump vanes.

After initial installation, the strainer may become clogged. Clean the strainer after the first week of installation. After this first cleaning, we recommend a monthly visual inspection. After several months, the cleaning frequency will be established. Before cleaning, disconnect the power cord from the power source and drain the reservoir.

Preface

Compliance

Products tested and found to be in compliance with the requirements defined in the EMC standards defined by 89/336/EEC as well as Low Voltage Directive (LVD) 73/23/EEC can be identified by the CE label on the rear of the unit. The testing has demonstrated compliance with the following directives:

LVD, 73/23/EEC	Complies with UL 3101-1:93
EMC, 89/336/EEC	EN 55011, Class A Verification
	EN 50082-1:1992
	IEC 1000-4-2:1995
	IEC 1000-4-3:1994
	IEC 1000-4-4:1995

For any additional information refer to the Letter of Compliance that shipped with the unit (Declaration of Conformity).

Unpacking

Retain all cartons and packing material until the unit is operated and found to be in good condition. If the unit shows external or internal damage, or does not operate properly, contact the transportation company and file a damage claim. Under ICC regulations, this is your responsibility.

If this product has been modified to operate at 0°C or lower, it has been tested with a non-freezing fluid. Although the system has been drained, some residual fluid may remain. This will not hinder your unit's performance.

Warranty

Units have a warranty against defective parts and workmanship for one full year from date of shipment. See back page for more details.

After-sale Support

NESLAB is committed to customer service both during and after the sale. If you have questions concerning the unit operation, contact our Sales Department. If your unit fails to operate properly, or if you have questions concerning spare parts or Service Contracts, contact our Service Department.

Before calling, please refer to the labels on the rear of the unit to obtain the following information:

- unit BOM number _____

- unit serial number _____

- pump type _____

Section I Safety

Warnings



Warnings are posted throughout the manual. These warnings are designated by an exclamation mark inside an equilateral triangle and text highlighted in bold. Read and follow these important instructions. Failure to observe these instructions can result in permanent damage to the unit, significant property damage, or personal injury or death.

Make sure you read and understand all instructions and safety precautions listed in this manual before installing or operating your unit. If you have any questions concerning the operation of your unit or the information in this manual, please contact our Sales Department (see After-sale Support).

Never place the unit in a location where excessive heat, moisture, or corrosive materials are present.

The unit construction provides extra protection against the risk of electrical shock by grounding appropriate metal parts. The extra protection may not function unless the power cord is connected to a properly grounded outlet. It is the user's responsibility to assure a proper ground connection is provided.

Never connect the OUTLET/SUPPLY or INLET/RETURN fitting to your building water supply or any water pressure source.

Never use flammable or corrosive fluids with this unit. Distilled and deionized water may be aggressive and cause material corrosion. Please contact NESLAB before subjecting this unit to prolonged exposure to distilled or deionized water.

Do not use automobile anti-freeze. Commercial anti-freeze contains silicates that can damage the pump seals. Use of automobile anti-freeze will void the manufacturer’s warranty.

Do not replace reservoir plug with a non-vented type or damage to the tank may occur.

For personal safety and equipment reliability, the following procedure should only be performed by a competent technician. Contact our Service Department for assistance (see Preface, After-sale Support).

Additional Warnings

In addition to the specific warnings listed on the previous page the following general warnings apply to you unit:

Performance of installation, operation, or maintenance procedures other than those described in this manual may result in a hazardous situation and may void the manufacturer's warranty.

Transport the unit with care. Sudden jolts or drops can damage the refrigeration lines.

Observe all warning labels.

Never remove warning labels.

Never operate damaged or leaking equipment.

Never operate the unit without cooling fluid in the reservoir.

Always turn off the unit and disconnect the power cord from the power source before performing any service or maintenance procedures, or before moving the unit.

Always empty the reservoir before moving the unit.

Never operate equipment with damaged power cords.

Refer service and repairs to a qualified technician.

Section II General Information

Description

The CFT Recirculating Chiller is designed to provide a continuous supply of cooling fluid at a constant temperature and volume.

The unit consists of an air-cooled refrigeration system, a sealable reservoir, recirculating pump, and a temperature controller.

Throughout the manual, you will be asked to consult the unit's serial number label or the pump identification label for specific information. Both labels are located on the rear of the unit.

Specifications

	CFT-25	CFT-33	CFT-75	CFT-150	CFT-300
Cooling Capacity[1]					
60Hz	580 Watts	950 Watts	2100 Watts	4500Watts	10650 Watts
50Hz	475 Watts	1000 Watts	1900 Watts	3735 Watts	9000 Watts
Temperature Range[2]	+5°C to +30°C			+5°C to +35°C	
Temperature Stability[3]	±0.5°				±1.0°C
Reservoir Volume					
Gallons	0.5	1.1	1.8	5.6	
Liters	1.9	4.1	6.8	21.3	
Refrigerant	R134a			R22	

1. Circulating water at 20°C, at 20°C ambient. Cooling capacity will vary depending on fluid temperature, ambient temperature, and cooling fluid. A PD-1 pump was used in the CFT-25, a PD-2 in the other units.
2. Modified temperature ranges from -15°C to +85°C are available.
3. CFT-300 stability determined with 86% heat load.

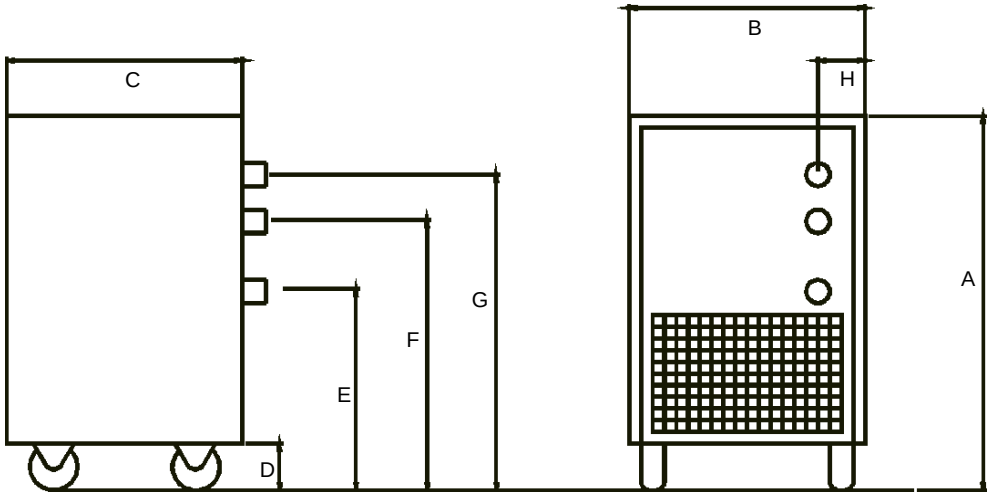

	CFT25	CFT33	CFT75	CFT150	CFT300
Unit Dimensions *Dimension A*	**22**	**24½**	**26½**	**36¾**	**43**
Dimension B	**12½**	**14¾**	**14 7/8**	**21 3/8**	**25½**
Dimension C	**21**	**22**	**24½**	**27¾**	**28½**
Dimension D	**2¾**	**2½**	**2½**	**3½**	**2¾**
Dimension E	**NA**	**NA**	**NA**	**NA**	**29**
Dimension F	**17 1/16**	**18½**	**22**	**32¼**	**38¼**
Dimension G	**20 1/16**	**21½**	**25**	**35¼**	**41¼**
Dimension H	**1½**	**1**	**1 1/8**	**1 1/8**	**1**
Crate Dimensions (H x W x D	**31x23x28**	**31x23x32**	**32x23x40**	**33x29x42**	**35x33x56**
Shipping Weight	**110**	**161**	**181**	**320**	**450**
Air Intake	**280**	**375**	**800**	**1050**	**2500**
Electrical Requirements *Volts*	**115V**	**115V**	**208/230V**	**208/2300V**	**208/230V**
Hertz	**60Hz**	**60Hz**	**60Hz**	**60Hz**	**60Hz**
Phase	**1**	**1**	**1**	**1**	**3**
Plug	**NEMA5-15P**	**NEMA5-20P**	**NEMAL6-15P**	**NEMAL6-20P**	**NA**

1. Dimension A is the height of the unit. The unit width and depth (dimensions B and C) are the case dimensions. Add approximately 2 inches to include the plumbing connections.
2. Dimension D is the distance from the floor to the bottom of the unit case (height of the castors).
3. Dimension E is the distance from the floor to the center of the DRAIN connection (CFT-300 only).
4. Dimension F is the distance from the floor of the center of the OUTLET connection.
5. Dimension G is the distance from the floor of the center of the INLET connection.
6. Dimension H is the distance from the unit's left side to the center of the INLET, OUTLET and DRAIN connections.
7. Weights are given in pounds
8. Air intake is given in cubic feet per minute.

Rev 01/30/97

Pump Capacity

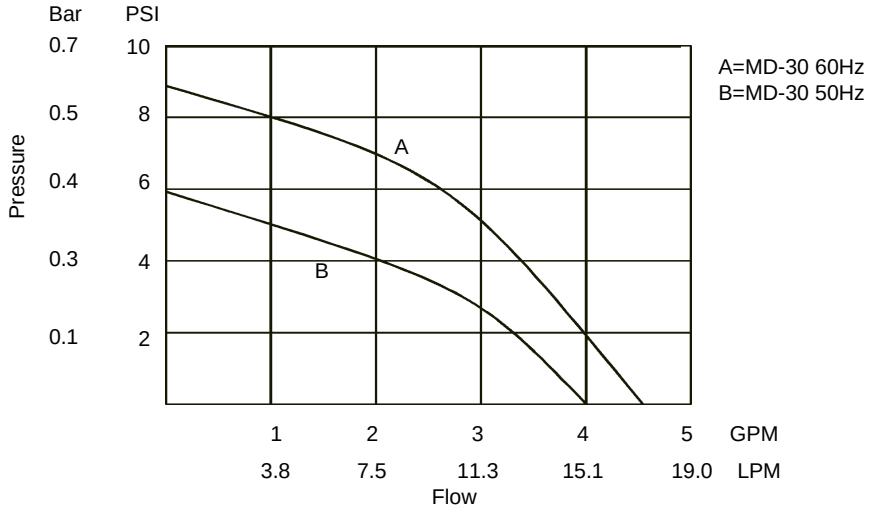

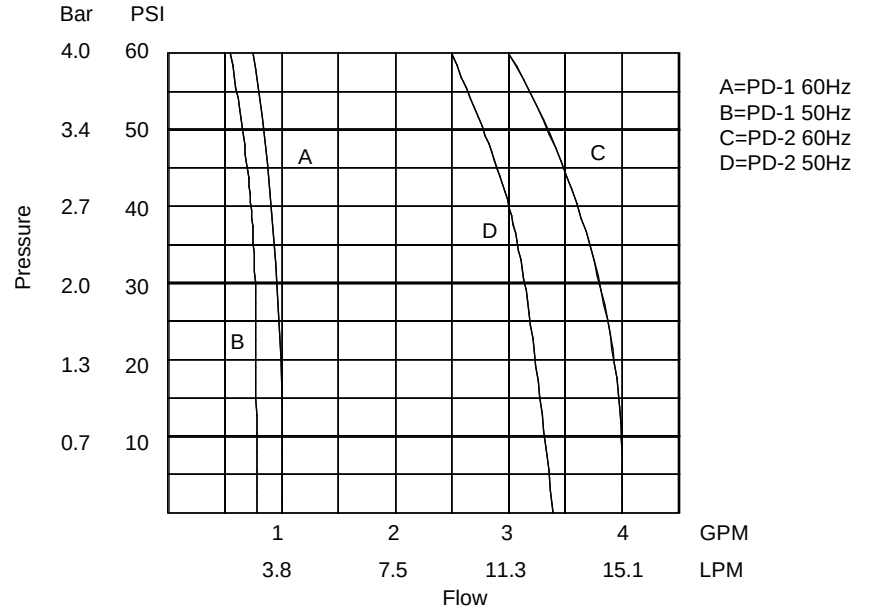

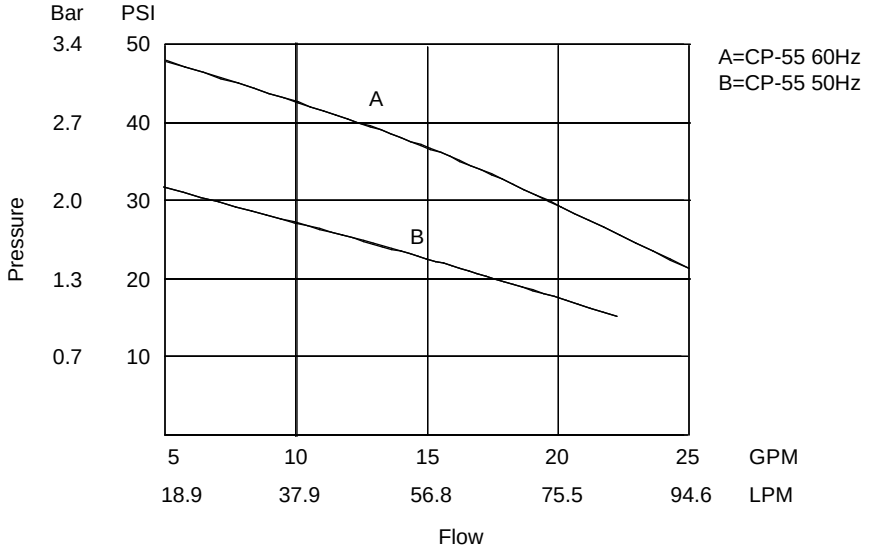

Section III Installation

Site

The unit should be located in a laboratory or clean industrial environment where ambient temperatures are inside the range of +13°C to +35°C.

Never place the unit in a location where excessive heat, moisture, or corrosive materials are present.

The unit has an air-cooled refrigeration system. Air is drawn through the front of the unit and discharged through rear and side panels. The unit must be positioned so the intake and discharge are not impeded. A minimum clearance of 18 inches (45 centimeters) on all vented sides is necessary for adequate ventilation. Inadequate ventilation will cause a reduction in cooling capacity and, in extreme cases, compressor failure.

Excessively dusty areas should be avoided and a periodic cleaning schedule should be instituted (see Section V, Cleaning).

The unit will retain its full rated capacity in ambient temperatures up to approximately +24°C. Above +24°C, derate the cooling capacity 1% for every 0.5°C above +24°C, up to a maximum ambient temperature of +35°C.

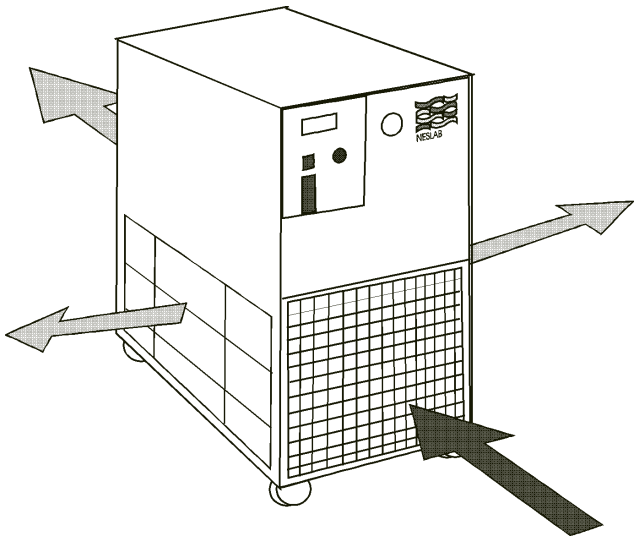

Direction of Air Flow

Electrical Requirements

The unit construction provides extra protection against the risk of electrical shock by grounding appropriate metal parts. The extra protection may not function unless the power cord is connected to a properly grounded outlet. It is the user's responsibility to assure a proper ground connection is provided.

Refer to Section II, Specifications, and to the serial number label on the rear of the unit for the specific electrical requirements of your unit.

The CFT-300 is supplied with a disconnect box. Wire the power connections in accordance to local, state and federal electrical codes. Double check all wiring to make sure it is properly connected and protected from the elements.

The CFT-300 is also equipped with a compressor crankcase heater. The crankcase heater warms the oil in the compressor and prevents refrigerant from mixing with the oil. Before start up, the unit must be connected to its power source for at least 12 hours. This allows time for the oil to be heated and separate from the refrigerant.

Plumbing Requirements

Before installing the unit to an instrument that previously used tap water as a cooling fluid, flush the instrument several times to remove any rust or scale that has built up. The manufacturer of the instrument should be able to recommend a cleaning fluid for their equipment.

The plumbing connections are located on the rear of the unit and are labelled OUTLET/SUPPLY and INLET/RETURN. CFT-25 to CFT-150 connections are ½ inch FPT, CFT-150s with CP-55 pumps are ¾ inch and CFT-300 connections are ¾ inch FPT.

Remove the plastic protective plugs from both plumbing connections.

Connect the OUTLET/SUPPLY fitting to the inlet of the instrument being cooled. Connect the INLET/RETURN fitting to the outlet of the instrument being cooled.

Never connect the fittings to your building water supply or any water pressure source.

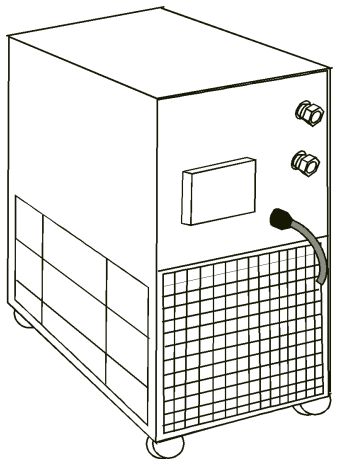

Plumbing Connections (Typical)

Two sets of plumbing adapters are included with CFT-25 to CFT-150 units. One set of adapters will accept 3/8 inch ID tubing. The other set will accept ½ inch ID tubing. If the unit is being plumbed using flexible tubing, install one set of adapters in the plumbing ports. To prevent leaking, be sure to wrap the threads of the adapters with Teflon® sealing tape before installing them in the plumbing ports.

Flexible tubing, if used, should be of heavy wall or reinforced construction. All tubing should be rated to withstand 80 psig at +30°C. Make sure all tubing connections are securely clamped. Avoid running tubing near radiators, hot water pipes, etc. If substantial lengths of tubing are necessary, insulation may be required to prevent loss of cooling capacity.

Tubing and insulation are available from NESLAB. Contact our Sales Department for more information (see Preface, After-sale Support).

It is important to keep the distance between the unit and the instrument being cooled as short as possible, and to use the largest diameter tubing practical. Tubing should be straight and without bends. If diameter reductions must be made, they should be made at the inlet and outlet of the instrument being cooled, not at the CFT.

If substantial lengths of cooling lines are required, they should be pre-filled with cooling fluid before connecting them to the unit.

Fluids

The selected fluid must have a viscosity of 50 centistokes or less at the lowest operating temperature.



Never use flammable or corrosive fluids with this unit. Highly distilled and deionized water may be aggressive and cause material corrosion. Please contact NESLAB before subjecting this unit to prolonged exposure to highly distilled or deionized water.

Filtered tap water is the recommended fluid for operation from +8°C to +30°C. See Water Quality Standards and Recommendations on the next page.

Below +8°C, a non-freezing fluid must be used. A mixture of tap water and laboratory grade ethylene glycol is suggested.



Do not use automobile anti-freeze. Commercial anti-freeze contains silicates that can damage the pump seals. Use of automobile anti-freeze will void the manufacturer's warranty.

Water Quality Standards and Recommendations

	Permissible (PPM)	Desirable (PPM)
Microbiologicals		
(algae, bacteria, fungi)	0	0
Inorganic Chemicals		
Calcium	<40	0.6
Chloride	250	<25
Copper	1.3	1.0
Iron	0.3	<0.1
Lead	0.015	0
Magnesium	<12	0.1
Manganese	0.05	<0.03
Nitrates\Nitrites	10 as N	0
Potassium	<20	0.3
Silicate	25	<1.0
Sodium	<20	0.3
Sulfate	250	<50
Hardness	17	<0.05
Total Dissolved Solids	50	10
Other Parameters		
pH	6.5-8.5	7-8
Resistivity	0.01*	0.05-0.1*
* Megohm-Cm (Compensated at 25°C)		

Unfavorably high total ionized solids (TIS) can accelerate the rate of galvanic corrosion. These contaminants can function as electrolytes which increase the potential for galvanic cell corrosion and lead to localized corrosion such as pitting which can be observed at the studs and on the outside surface of cooling coils. Eventually, the pitting will become so extensive that the coil will leak refrigerant into the water reservoir.

As an example, raw water in the United States averages 171 ppm (of NaCl). The recommended level for use in a water system is between 0.5 to 5.0 ppm (of NaCl).

Recommendation: Initially fill the tank with distilled/deionized water. Do not use untreated tap water as the total ionized solids level may be too high.

Maintain this water quality at a resistivity of between 1 to 10 megohm-cm (compensated at 25°C) by using a purification system. Although the initial fill may be as high as 10 megohm-cm (compensated at 25°C), the desired level for long time usage is 1 to 3 megohm-cm (compensated at 25°C).

The above two recommendations will reduce the electrolytic potential of the water and prevent or reduce the galvanic corrosion observed.

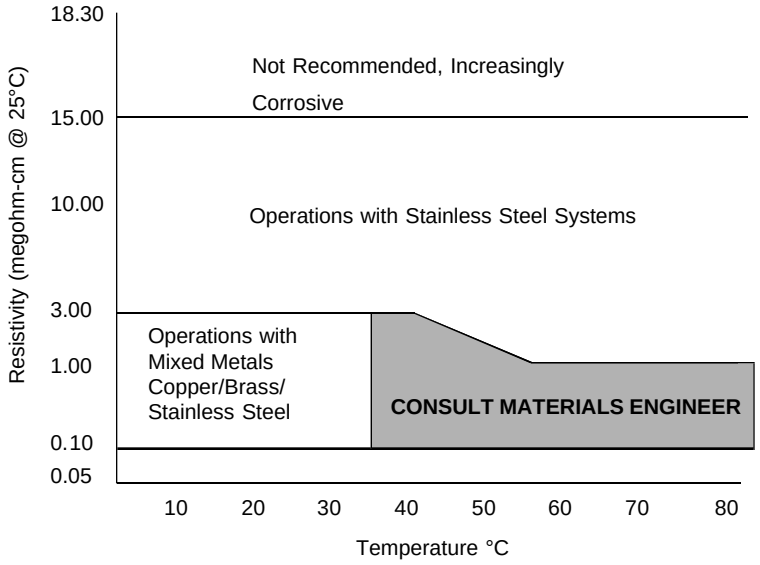

Water Quality Considerations

Filling Requirements

Remove the reservoir access panel by unscrewing the thumbscrews. Locate the reservoir plug (square nut). Remove the plug and fill the reservoir with clean cooling fluid, following the special considerations outlined in the following paragraphs.

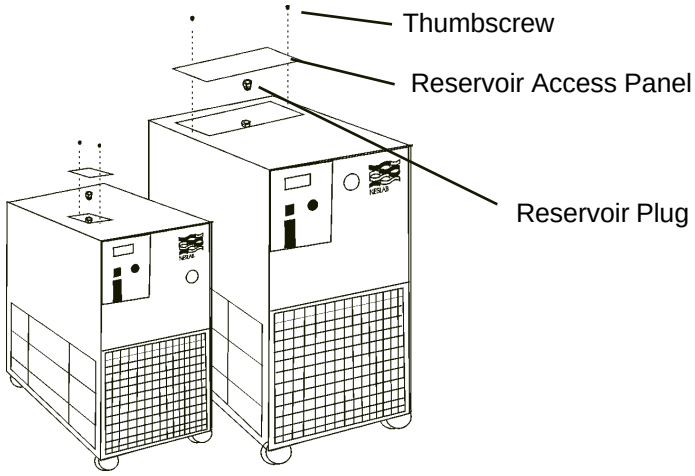

Reservoir filling locations (Typical)

NOTE: The CFT-300 has a FILL lamp which illuminates whenever the reservoir level is below normal operating level.

Circulating to a closed system (closed to the atmosphere)
Fill the reservoir to the bottom of the fill hole threads. Since the reservoir capacity is small compared to many instruments being cooled, have extra cooling fluid on hand to keep the system topped off when external circulation is started.

NOTE: The tank in your unit has a vent which relieves pressure built up from thermal expansion of water. The vent is located on the reservoir plug. It activates when tank pressure reaches 3 - 5 psi.

Do not replace reservoir plug with an non-vented type or damage to the tank may occur.

Circulating to an open system (open to the atmosphere)
Fill the reservoir so ¾ of the fill hole threads are covered. Wrap the tank plug with Teflon® sealing tape. Replace the tank plug and tighten securely to prevent air entry.

When circulating cooling fluid to an open vessel or tank, connect the OUTLET/SUPPLY and INLET/RETURN lines to the open tank. Secure the INLET/RETURN (suction) line below the fluid surface. The INLET/RETURN line should be submerged deep enough to avoid sucking air. Make sure the INLET/RETURN line is free of particles and debris that can block the flow of fluid. A baffle or screen may be required.

Section IV Operation

Start Up

Before starting the unit, double check all electrical and plumbing connections and make sure the circulating system (the CFT, the instrument being cooled, and the tubing that connects them) has been properly filled with cooling fluid. To start the unit, place the POWER Switch to the on (**I**) position. The refrigeration system and the recirculation pump will start. The POWER Switch illuminates (except for the CFT-150) to indicate the system is operating. Units with PD pumps display the pump operating pressure on the RECIRCULATING PRESSURE gauge.

To turn the unit off, place the POWER Switch to the off (**0**) position.

The COOL LED indicates the status of the refrigeration system. It illuminates to indicate the refrigeration system is removing heat from the cooling fluid. As the operating temperature approaches the temperature setpoint, the LED will extinguish.

The IDLE LED indicates the unit is in a hot-gas-bypass mode of operation. As the operating temperature approaches the temperature setpoint, the COOL and IDLE LEDs cycle to indicate the approximate duty cycle of the unit.

When the unit is shut off, wait approximately five minutes before restarting. This allows time for the refrigeration pressures to equalize. If the pressures are not allowed to equalize, the compressor will short-cycle (clicking sound) and no cooling will occur.

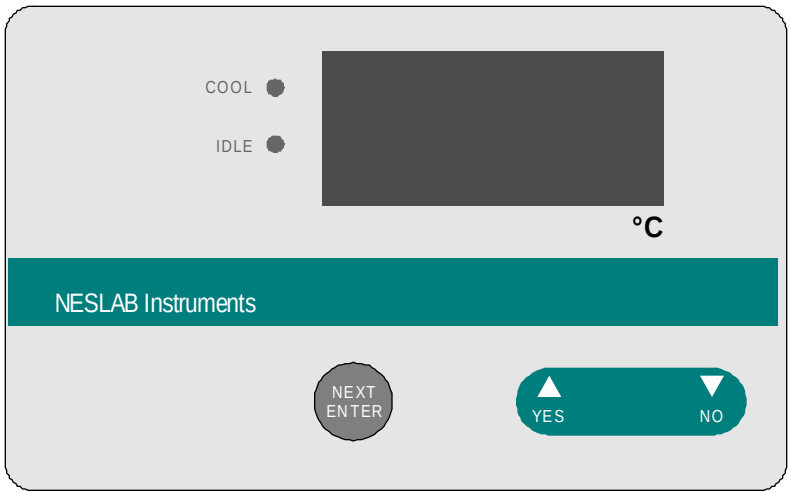

Digital Temperature Controller

Digital Controller

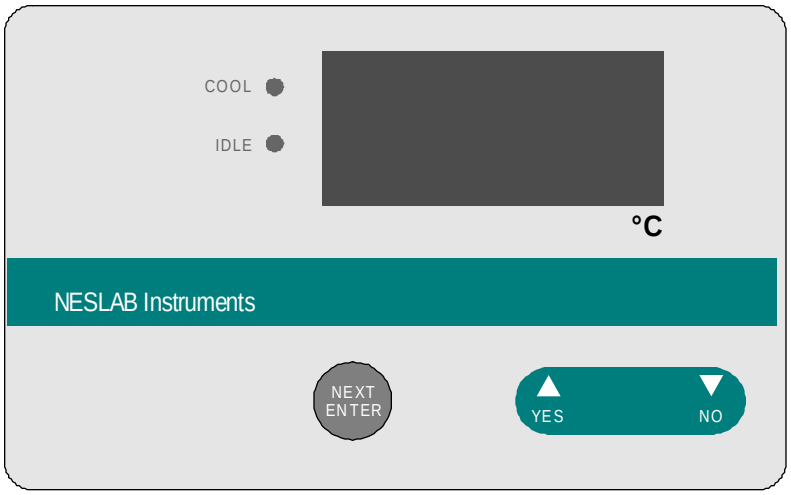

Digital Temperature Controller

The digital controller controls temperature using a PID (Proportional-Integral-Derivative) algorithm. It is designed with self-diagnostic features and easy to use operator interface.

NEXT ENTER
Use this key to scroll forward through the menus and also to accept and save changes.

YES, ▲
This dual purpose key is used to answer Yes to Y/N questions or to increment numerical values upward for setting numeric values.

NO, ▼
This dual purpose key is used to answer No to Y/N questions or to decrement numerical values downward for setting numeric values.

The controller will not allow you to enter a value above the maximum or below the minimum value, or any illegal value. If you try to enter an illegal value the display will revert to its original value when the last digit was entered.

Changing a Value

The **YES** key increments the value. The **NO** key decrements the value.

The display will flash as soon as either key is depressed, and will continue to flash until the **NEXT ENTER** key is pressed twice to accept the new value.

The new value will not be used by the controller until the **NEXT ENTER** key is depressed twice and the display stops flashing.

NOTE: If the **ENTER** key is not depressed twice within three minutes, the controller will time out and the new value will not be accepted. The controller will revert to the previous value.

The controller will not allow you to enter a value above the unit's maximum temperature range or below the minimum temperature range. If you try to enter an illegal value outside the range, the display will revert to its original value.

Controller Displays

An alphanumeric display presents numeric readings of various operating conditions within the unit. Display function is selected by pressing the appropriate keys to move through a menu of available information.

The controller has several loops. The Operator's Loop displays the reservoir temperature and is used to change the setpoint. The Setup Loop is used to adjust the controller's PID parameters. The Setup Loop can be accessed from the Operator's Loop by pressing and holding the key combinations shown in the figure below.

NOTE: If altering any settings in the Setup Loop, should you desire to return to the temperature display and abort any changes, keep pressing the **NEXT ENTER** until the display reads **Stor**, then press **NO.**

Operator's Loop

When the controller is first powered up it enters the Operator's Loop, displaying the reservoir fluid temperature. Press the NEXT ENTER key to view the setpoint.

SP displays the controller setpoint. The display will flash between SP and the actual setpoint number. Use the YES/NO keys to change the setpoint value. Once the desired setpoint is displayed, press the NEXT ENTER key twice.

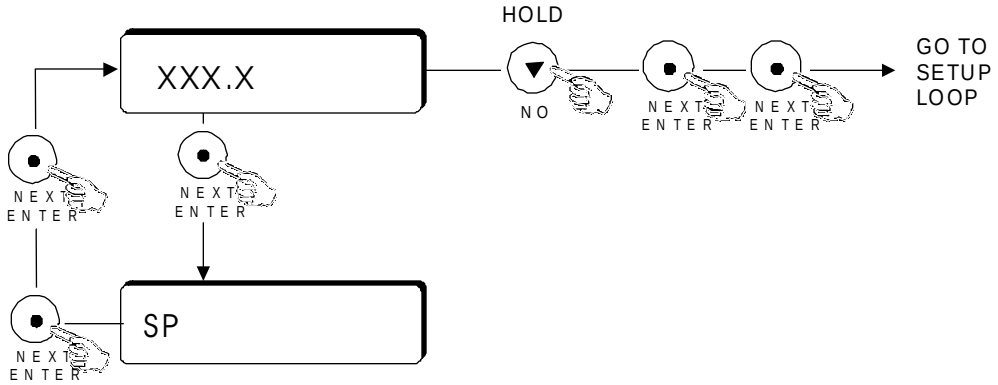

Operator's Loop

Setup Loop

The Setup Loop is used to adjust the controller's PID parameters (Pro = Proportional, int = Integral, dEr = Derivative).

Enter the Setup Loop from the Operator's Loop by pressing and holding the NO key while pressing the NEXT ENTER key twice. Use the YES/NO keys to adjust the values. Press the NEXT ENTER key twice to accept the new value.

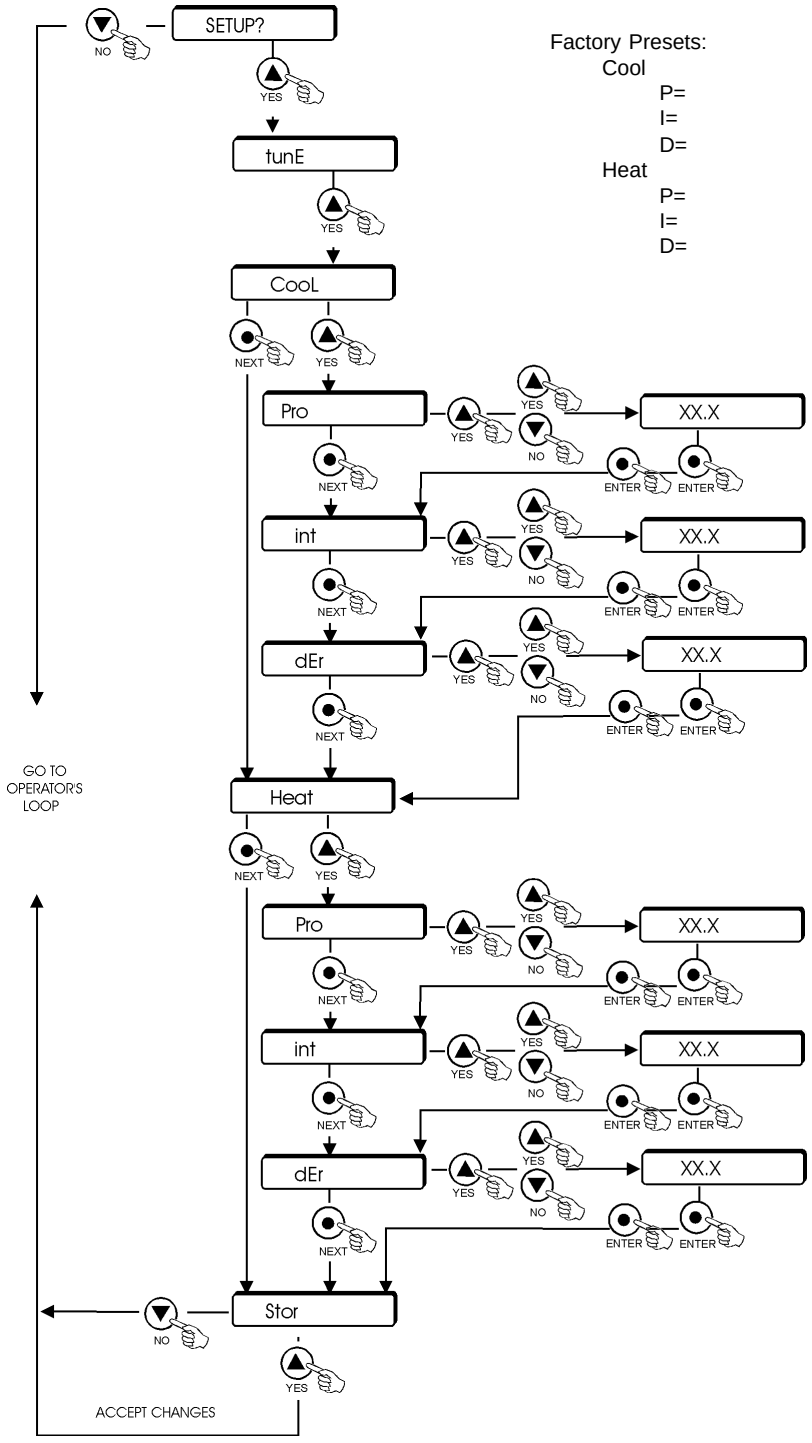

Setup Loop

Pressure Relief Valve

Units with PD pumps have a pressure relief valve which establishes the maximum operating pressure of the unit. If the pressure of the fluid leaving the pump exceeds the valve setting, the relief valve will bypass the fluid within the unit to relieve the pressure. The relief valve does not determine the actual operating pressure; the operating pressure is determined by the back pressure of the system.

If an adjustment is necessary, contact our Customer Service Department.

High Temperature Cutout (Optional)

The High Temperature Cutout (HTC) is designed to shut down the unit in the event the temperature of the fluid in the reservoir exceeds the HTC setting. The HTC is normally located on the rear of the unit.

NOTE: The HTC temperature scale is in °F.

CFT-300 High/Low Pressure Cutouts

CFT-300 units are equipped with high and low refrigeration pressure cutouts. Should either cutout activate the unit will shut down.

The High Pressure Cutout (HPC) activates if there is a blockage in the refrigeration lines or if the refrigerant temperature becomes too hot. The HPC is factory preset at 400psi.

The Low Pressure Cutout (LPC) activates if there is a leak in the refrigeration lines. THE LPC is factory preset at 4psi.

Both cutouts are located inside the case behind the rear panel. Once the cause of the shut down has been determined and corrected, manually depress the white button on the applicable cutout. If a "click" is not heard when depressing the button, the cutout was not activated and the unit shut down for another reason.

CFT-150 High Pressure Cutout

Some CFT-150 units are equipped with High Pressure Cutouts (HPC). Should the HPC activate the unit will shut down.

The HPC activates if there is a blockage in the refrigeration lines or if the refrigerant temperature becomes too hot. The HPC is factory preset at 400psi.

The cutout is located inside the case behind the rear panel. Once the cause of the shut down has been determined and corrected, manually depress the white button on the applicable cutout. If a "click" is not heard when depressing the button, the cutout was not activated and the unit shut down for another reason.

External Pressure Regulator (Optional)

For applications requiring a maximum pressure less than 55 PSI (380 kPa), an External Pressure Reducer (EPR) is available. An EPR allows an adjustable operating pressure of 10 to 50 PSI (70 to 345 kPa). If the pressure of the fluid leaving the chiller exceeds the relief valve setting, the relief valve will bypass excess fluid back into the chiller to relieve the overpressure.

The pressure of the system is determined by the back pressure of the connected equipment and the flow rate of the recirculating fluid to your application. Connect the EPR as described.

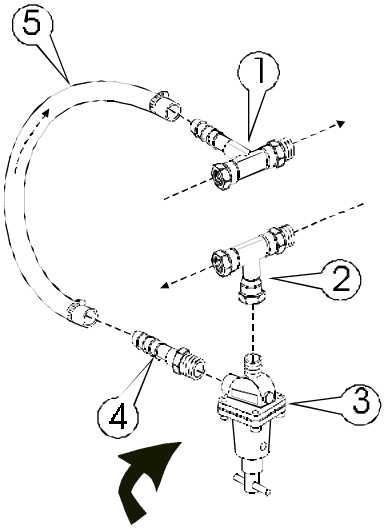

NOTE: Install the fittings in the exact sequence shown.

NOTE: Use Teflon® tape on all threaded fittings.

Connect the Inlet Tee Assembly (1) to the chiller. Connect the Outlet Tee Assembly (2) to the chiller. Attach the relief valve (3) to the Outlet Tee Assembly (2). Attach the Hose Nipple (4) to the Relief Valve (3). Attach the Hose (5) between the Inlet Tee Assembly (1) and the Hose Nipple (4).

The EPR is now installed. Connect the inlet (to your application) to the remaining fitting of the Outlet Tee Assembly (2). Connect the outlet (from your application) to the remaining fitting of the Inlet Tee Assembly (1).

Tighten the hose clamps tight enough to prevent leakage. Do not overtighten or the clamps will bite into the flexible tubing and cause excessive wear. If a torque wrench is available, torque hose clamps to 50 in/lbs (280 cm/kg). Nylon-reinforced hose tends to cold-flow, so the clamps will need to be torqued again later. (The hose clamps do not actually loosen, but rather the hose outside diameter decreases.)

The "T" adjustment handle is equipped with a locknut. To adjust the relief pressure setting loosen the locknut and turn the "T" handle to the minimum pressure setting (direction of arrow).

To simulate blockage, close (or pinch off) the hose between the EPR outlet tee assembly and the instrument being cooled. Monitor the operating pressure of the unit. Turn the "T" handle until the desired relief pressure is set. (The EPR valve cannot be set lower than the total back pressure of the instrument being cooled or the instrument will not receive any flow.)

Tighten the locknut to secure the position of the "T" handle. Open the hose between the EPR outlet tee assembly and the instrument being cooled.

Heater Package (Optional)

Heaters are controlled by a switch on the temperature controller. The heater itself is accessible through the small service panel on the rear of the unit.

These units also have a Low Level indicator. The indicator illuminates if the fluid level in the reservoir drops below proper operating level.

Illustration A shows the desired fluid level for normal operation.

Should the reservoir be filled as shown in illustration B, units designed to operate at high-end temperatures (near boiling) may cause air in the reservoir to become trapped. The air can be vented by slightly tilting the unit forward on its front castors.

Any fluid venting from the reservoir will drain through a hose which feeds to a small hole in the bottom of the unit.

Do not used silicon-based fluids with units designed to operate at high temperatures. These type fluids will damage the hoses and pump seal.

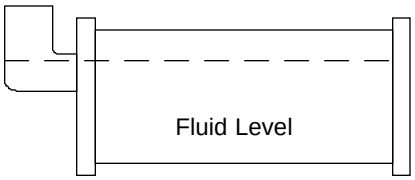

Illustration A

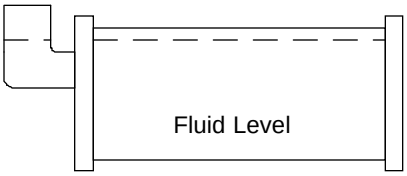

Illustration B

Section V Maintenance and Service



For personal safety and equipment reliability, the following procedure should only be performed by a qualified technician. Contact our Service Department for assistance (see Preface, After-sale Support).

Service Contracts

NESLAB offers on-site Service Contracts that are designed to provide extended life and minimal down-time for your unit. For more information, contact our Service Department (see Preface, After-sale Support).

Draining the Reservoir

The CFT-300 is equipped with a ½ inch FPT DRAIN fitting located on the rear of the unit.

To drain the CFT-25 to CFT-150 reservoirs we recommend the use of a wet/dry vacuum. Remove the reservoir plug and carefully insert the wet/dry vacuum so as not to damage the cooling coils. **NOTE:** Tilting the unit more than 45° may allow compressor oil to seep into the suction line.

Cleaning

Reservoir

Periodically inspect the fluid inside the reservoir. If cleaning is necessary, flush the reservoir with a cleaning fluid compatible with the circulating system and the cooling fluid.

The cooling fluid should be replaced periodically. When operating at low temperatures, the concentration of water in the cooling fluid will increase over time, leading to a loss of cooling capacity.

Before changing the cooling fluid, raise the operating temperature of the unit to de-ice the cooling coils. Refer to Section III, Filling Requirements for instructions on replacing the cooling fluid.

Condenser

For proper operation, the unit needs to pull substantial amounts of air through a condenser. A build up of dust or debris on the fins of the condenser will lead to a loss of cooling capacity.

The lower front of the unit has a one-piece grille assembly. Gently pry the assembly off with a flathead screwdriver. Use care not to scratch the paint.

Periodic vacuuming of the condenser fins is necessary. The frequency of cleaning depends on the operating environment. We recommend a visual inspection of the condenser be made monthly after initial installation. After several months, the frequency of cleaning will be established.

Algae

To restrict the growth of algae in the reservoir, it is recommended that the reservoir cover be kept in place and that all circulation lines be opaque. This will eliminate the entrance of light which is required for the growth of most common algae.

NESLAB recommends the use of Chloramine-T, 1 gram per 3.5 liters.

Pump Strainer

Units with PD pumps have a strainer. Refer to the pump label on the rear of the unit to identify the type of pump in your unit.

If debris is in the system, the strainer will prevent the material from being drawn into the pump and damaging the pump vanes.

After initial installation, the strainer may become clogged with debris and scale. Therefore, the strainer must be cleaned after the first week of installation. After this first cleaning, a monthly visual inspection is recommended. After several months, the frequency of cleaning will be established.

Before cleaning the strainer, disconnect the power cord from the power source and drain the reservoir.

PD-1 pumps have a wire mesh strainer located in the pump head. PD-2 pumps have the strainer located in the pump suction line.

Remove the wrapper from the unit. Unscrew the larger of the two acorn nuts on the pump head and remove the screen.

Clean the screen by rinsing it with water.

When the screen is clean, replace it in the strainer, tighten the acorn nut and replace the wrapper. Refer to Section III, Filling Requirements for instructions on replacing the cooling fluid.

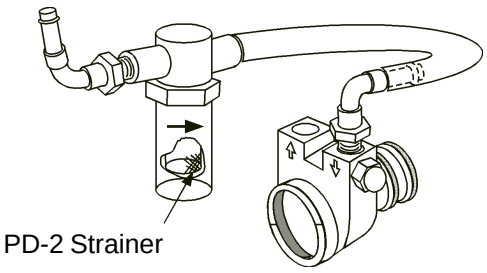

PD-2 Strainer

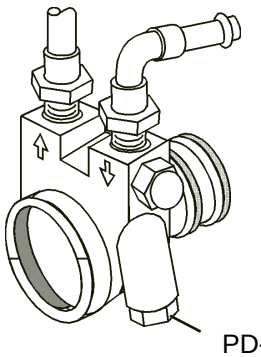

PD-1 Strainer

Pump Motor Lubrication

PD pump motors require periodic lubrication. Refer to the pump label on the rear of the unit to identify the type of pump in your unit.

PD pumps use sleeve type bearings with large reservoirs. Oiling instructions are generally posted on each motor. In the absence of instructions, add approximately 30 to 35 drops of SAE 20 non-detergent oil to each bearing on the following schedule (SAE 20 = 142 CS viscosity):

Duty Cycle	Oiling Frequency
Continuous	Once every year
Intermittent	Once every 2 years
Occasional	Once every 5 years

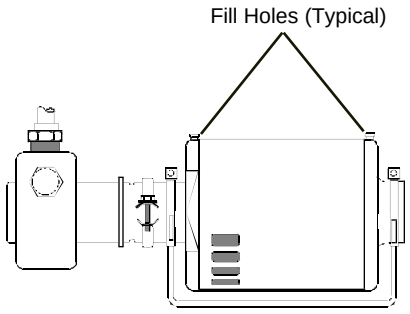

Hoses

The unit's internal and external hoses and clamps should be inspected and tightened on at least a semiannual basis.

Suction Discharge Pressure Speed Check

Unit	Pump	Refrigerant	Suction PSIG	Discharge PSIG	Speed °C/Min
CFT-25	PD-1	R134a	36 -38	160 - 170	4.8
CFT-25	MD-30	R134a	25 - 28	145 -160	4.0
CFT-33	PD1/2	R134a	42 - 45	180 - 200	3.0
CFT-75	PD1/2	R134a	37 - 41	170 -185	4.6
CFT-150	PD2	R22	70	270	2.8
CFT-300	PD2	R22	88 - 94	265 - 280	6.8
CFT-300	CP-55	R22	85 - 90	268 - 280	6.8

Standard temperature 60 Hertz units, derate 17% for 50 Hertz Units. +20°C fluid temperature, unit in the COOL mode, +20°C ambient. 100% water in the reservoir. Wrapper removed.

Section VI Troubleshooting

Checklist

Unit will not start

Check the line cord, make sure it is plugged in.

Check the voltage of the power source. Make sure it is within the rated voltage of the unit, ±10%.

Check that the Power Switch/Circuit Breaker has not tripped.

Check the setting on the optional High Temperature Cutout.

CFT-300 units are equipped with high and low pressure switches. If either switch activates the unit will shut down. Once the cause has been determined you have to manually reset the switch. The switches are located behind the rear panel, see Section IV, Operation.

Unit will not circulate fluid

Check the reservoir level. Fill, if necessary.

Make sure the pump has been purged.

Check the pressure gauge (units with PD pumps). If the reading is 60 psig, check the instrument being cooled for restrictions in the cooling line.

Check the pump strainer (units with PD pumps). A clogged strainer can starve the pump.

Inadequate temperature control

If the temperature continues to rise, make sure the heat load of the instrument being cooled does not exceed the rated specification, see Section II, Specifications.

Make sure the air intake and discharge are not impeded and the ambient temperature does not exceed +35°C.

Make sure the condenser is free of dust and debris, see Section VI, Cleaning.

If the compressor short-cycles (a clicking sound), check the line voltage. It should be within the 10% of the specified voltage. Wait 5 minutes before restarting the unit.

Service Assistance

If, after following these troubleshooting steps, your unit fails to operate properly, contact our Service Department for assistance (see Preface, After-sale Support). Before calling, please refer to the serial number label on the rear of the unit to obtain the following information:

- *unit BOM number*
- *unit serial number*
- *voltage of unit*
- *voltage of power source*

Pump Flow Diagram

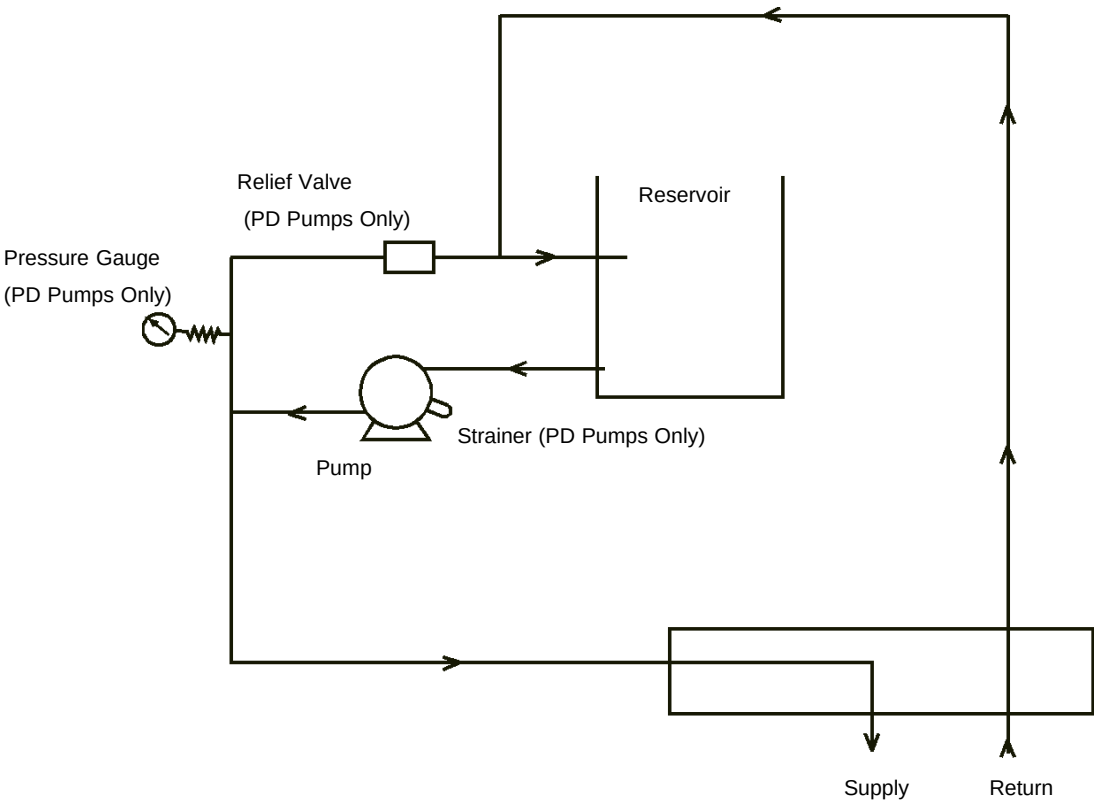

WARRANTY

NESLAB Instruments, Inc. warrants for 12 months from date of shipment any NESLAB unit according to the following terms.

Any part of the unit manufactured or supplied by NESLAB and found in the reasonable judgment of NESLAB to be defective in material or workmanship will be repaired at an authorized NESLAB Repair Depot without charge for parts or labor. The unit, including any defective part must be returned to an authorized NESLAB Repair Depot within the warranty period. The expense of returning the unit to the authorized NESLAB Repair Depot for warranty service will be paid for by the buyer. NESLAB's responsibility in respect to warranty claims is limited to performing the required repairs or replacements, and no claim of breach of warranty shall be cause for cancellation or recision of the contract of sales of any unit.

With respect to units that qualify for field service repairs, NESLAB's responsibility is limited to the component parts necessary for the repair and the labor that is required on site to perform the repair. Any travel labor or mileage charges are the financial responsibility of the buyer.

The buyer shall be responsible for any evaluation or warranty service call (including labor charges) if no defects are found with the NESLAB product.

This warranty does not cover any unit that has been subject to misuse, neglect, or accident. This warranty does not apply to any damage to the unit that is the result of improper installation or maintenance, or to any unit that has been operated or maintained in any way contrary to the operating or maintenance instructions specified in NESLAB's Instruction and Operation Manual. This warranty does not cover any unit that has been altered or modified so as to change its intended use.

In addition, this warranty does not extend to repairs made by the use of parts, accessories, or fluids which are either incompatible with the unit or adversely affect its operation, performance, or durability.

NESLAB reserves the right to change or improve the design of any unit without assuming any obligation to modify any unit previously manufactured.

THE FOREGOING EXPRESS WARRANTY IS IN LIEU OF ALL OTHER WARRANTIES, EXPRESSED OR IMPLIED, INCLUDING BUT NOT LIMITED TO WARRANTIES OR MERCHANTABILITY AND FITNESS FOR A PARTICULAR PURPOSE.

NESLAB'S OBLIGATION UNDER THIS WARRANTY IS STRICTLY AND EXCLUSIVELY LIMITED TO THE REPAIR OR REPLACEMENT OF DEFECTIVE COMPONENT PARTS AND NESLAB DOES NOT ASSUME OR AUTHORIZE ANYONE TO ASSUME FOR IT ANY OTHER OBLIGATION.

NESLAB ASSUMES NO RESPONSIBILITY FOR INCIDENTAL, CONSEQUENTIAL, OR OTHER DAMAGES INCLUDING, BUT NOT LIMITED TO LOSS OR DAMAGE TO PROPERTY, LOSS OF PROFITS OR REVENUE, LOSS OF THE UNIT, LOSS OF TIME, OR INCONVENIENCE.

This warranty applies to units sold in the United States. Any units sold elsewhere are warranted by the affiliated marketing company of NESLAB Instruments, Inc. This warranty and all matters arising pursuant to it shall be governed by the law of the State of New Hampshire, United States. All legal actions brought in relation hereto shall be filed in the appropriate state or federal courts in New Hampshire, unless waived by NESLAB.

NESLAB

CFT series

using TC-200 controller

NESLAB Manual P/N U00320
Rev. 22 June 1999

Service manual

NESLAB online
Product Service Information, Electronic Catalog, Applications Notes, MSDS Forms, e-mail.

Call our bulletin board system
(603)427-2490
Contact us for free FirstClass® access software. Specify Macintosh or Windows.

Voice Info: (800) 4-NESLAB

Visit our Web page at:

http://www.neslabinc.com

service resources



NESLAB ONLINE

NESLAB ONLINE is your source for online service data, including service bulletins, manuals, refrigerant charging information, calibration instructions, and more for all catalog units. You can browse the same library our Technical Support representatives use - and this is available 24 hours a day, 7 days a week. Obtain the access software, FirstClass Client, from sources on the next page or from us. Then use it to connect to (603) 427-2490 by modem.

→ ☐ FirstClass Client for Macintosh

→ ☐ FirstClass Client for Windows 3.x '95

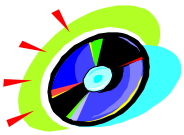

NESLAB OFFLINE

NESLAB OFFLINE is a cd-rom which contains all the content of NESLAB ONLINE as of Jan. 1 1998. This is ideal if you have no modem capability. The cd-rom works on both Macintosh and Windows computers. It also includes FirstClass Client.

→ ☐ NESLAB OFFLINE cd-rom



The EVAPORATOR

The EVAPORATOR is our service newsletter. It contains service bulletins and information of interest to anyone who maintains NESLAB equipment.

→ ☐ subscription to The Evaporator

mail:
NESLAB ONLINE
PO Box 1178
Portsmouth NH 03802-1178

fax: (603) 430-6387

e-mail:
rick.mills@neslabinstruments.com

Name _____

Company _____

Address _____

City _____

State / Province _____

Zip / Postal code _____

e-mail address (optional) _____

	Sources for FirstClass Client for Macintosh	Sources for FirstClass Client for Windows
	**3.5" disk:** Obtain from NESLAB. The Mac client is published on red disks. If you have a CD drive, use one of the CD sources below as they carry a later version. Installation is not required - you can run the application right off the floppy disk.	**3.5" disk:** Obtain from NESLAB. The Windows client is published on blue disks. It works on Windows 3.x or Windows 95. If you have a CD-ROM drive, use the CD-ROM (below) instead as it carries a later version.
	**CD-ROM:** NESLAB OFFLINE 1998 cd-rom cd-rom companion to the magazine: MacAddict, Issue #1, Sep. 1996 go to: Shareware / Connectivity / FirstClass Client. cd-rom companion to the magazine: MacAddict, Issue #13, Sep. 1997 go to: Shareware / Communications / FirstClass Client. cd-rom companion to the book: Macintosh Revelations by Ken Maki go to: Telecom / BBS Software / FirstClass Client. Any cd-rom shareware/software collection from BMUG (Berkeley Mac Users Group)	**CD-ROM:** NESLAB OFFLINE 1998 cd-rom
NESLAB ONLINE Intranet - bbs	**Download from NESLAB ONLINE:** Go to Conferences / Software / Mac	**Download from NESLAB ONLINE:** Go to Conferences / Software / Windows
AMERICA Online	**Download from America Online:** Keyword: SoftArc	**Download from America Online:** Keyword: Softarc
CSi CompuServe	**Download from Compuserve:** TWEUROPA / Teletools / FCMAC.ZIP	**Download from Compuserve:** PCBBS / BBS programs / FCC300.EXE
	**Download from World Wide Web:** http: // www.softarc.com	**Download from World Wide Web:** http: // www.softarc.com

.
.

Contents

Section I: Safety

Warnings 6

Section II: General information

After sale support 7
Other resources 7
Decoding part numbers 8
Interface defined 9
Navigating loops 10
Operator's loop 10
Setup loop 11
Calibration loop 13
Configuration loop 14
Service loop 15
Displaying software version 16

Section III: Service

Troubleshooting 17
Microprocessor replacement 20
Error codes 21

Section IV: Adjustments

Factory defaults 22
Restoring factory defaults 22
Field calibration 23
Hot gas valve 26

Section V: Preventive maintenance

Service contracts 27
Reservoir 27
Cleaning 27
Algae 28
Pump strainer 28
Pump motor lubrication 29
Torque values 29

Section VI: Reference

Refrigerant data 30
MSDS form: R-134a refrigerant 31
MSDS form: R-22 refrigerant 33
Service bulletin U00336: CFT75 - solenoid valve change 38
Service bulletin U00349: CFT33 - check capacitor wiring 39
Year 2000 statement 40

Section I: Safety

Warnings

Make sure you read and understand all instructions and safety precautions listed in this manual before installing or operating your unit. If you have any questions concerning the operation of your unit or the information in this manual, contact our Sales Department (see After-sale Support).

Performance of installation, operation, or maintenance procedures other than those described in this manual may result in a hazardous situation and may void the manufacturer's warranty.

Observe all warning labels. Never remove warning labels.
Never operate damaged or leaking equipment.
Never operate the unit without cooling fluid in the reservoir.
Always turn off the unit and disconnect the power source before performing any service or maintenance procedures, or before moving the unit.
Always empty the reservoir before moving the unit.
Never operate equipment with damaged line cords.
Refer service and repairs to a qualified technician.



In addition to the safety warnings listed above, warnings are posted throughout the manual. These warnings are designated by an exclamation mark inside an equilateral triangle with text highlighted in bold print. Read and follow these important instructions. Failure to observe these instructions can result in permanent damage to the unit, significant property damage, or personal injury or death.



The lightning flash with arrow symbol, within an equilateral triangle, is intended to alert the user to the presence of non-insulated "dangerous voltage" within the unit's enclosure. The voltage may be of significant magnitude to constitute a risk of electrical shock.

Section II: General information

After Sale Support

NESLAB is committed to customer service both during and after the sale. If you have questions concerning the operation of your unit, contact our Sales Department. If your unit fails to operate properly, or if you have questions concerning spare parts or service contracts, contact our Service Department. Before calling, please obtain the following information from the unit's serial number label:
part number
serial number

Other resources

The Instruction and Operation Manual for the CFT series is PN U00362.

Pump systems are covered in a separate service manual.
For MD pumps, obtain service manual 000877.
For PD pumps, obtain service manual 000878.

Decoding part numbers

NESLAB identifies units using a 12-digit part number. To decode the part number, split up the digits as shown in the chart below. This will define what characteristics the unit has.

000	0	00	00	00	00
unit family	condenser	electrical	pump/head	controller	catalog

unit family

128 EX111
129 EX211
130 EX221
131 EX411
132 EX511
134 RTE111
135 RTE211
136 RTE221
137 EX111
138 EX211
139 EX221
140 EX411
141 EX511
157 RTE140
167 RTE111
168 RTE211
169 RTE221
171 RTE140,LT50
331 CFT25A
332 CFT33A
333 CFT75A
334 CFT25, R12
335 CFT33, R12
336 CFT75, R12
337 CFT150,FAC200
347 CFT25, R22
348 CFT33, R22
349 CFT75, R22
386 HX75, R22
387 HX100, R22
388 HX150, R22
389 HX200, R22
390 HX300, R22
391 HX500, R22
392 HX750, R22
393 CFT25, R134a
394 CFT33, R134a
395 CFT75, R134a
396 CFT300,FAC400
397 CFT500
398 CFT750
400 CFT100
607 CFT50
608 CFT75
612 RTE microprocessor
613 CFT200

condenser

0 Not applicable
1 Air cooled
2 Water cooled

electrical

00 None
01 100v / 50Hz / 1ø
02 100v 60Hz (no longer used)
03 115v / 60Hz / 1ø
04 208-230v / 60Hz / 1ø
05 208-230v / 60Hz / 3ø
06 220-240v / 50Hz / 1ø
07 220-240v / 50Hz / 3ø
08 Slave
09 440-480v / 60Hz / 3ø
10 380-415v / 50Hz / 3ø (4 wire)
11 100v / 50-60Hz
12 100-115v / 50-60Hz
13 200v / 50Hz / 1ø
15 200v / 50-60Hz
16 Dual rated:
200v / 50Hz / 1ø
200-230v / 60Hz / 1ø
17 208v / 60Hz / 3ø (5 wire)
20 415v / 50Hz / 3ø
21 380-415v / 50Hz / 3ø (5 wire)
22 200-240v / 50-60Hz /1ø
23 380-480v / 50-60Hz / 3ø (4 wire)
99 Special

pump/head

00 No pump
01 CP25
02 CP55
03 PD1
04 PD2
05 CP75
06 TU1
07 TU5
08 TU6
09 TU7
10 TU8
11 SS PD1
12 SS PD2
15 MD30
16 CP20
17 G1
18 F Pump, 1 Stage
19 F Pump, 2 Stage
20 Z Pump
21 F Immersion head
22 R Immersion head
23 FV Immersion head
24 H Pump
25 Dual PD1
26 Dual PD2
28 was PD3, now unassigned
29 CP100
30 TU9
31 TU3
99 Special

controller

01 Analog
02 Digital, non bath
03 Series II
04 Programmable
05 Basic
06 Cryotrol
07 Digital, bath
08 UL approved
09 UL approved plus interlocks
10 UL approved plus alarm pkg.
11 Microprocessor
12 Digital remote (HX1000, HX2000)
13 Fisher standard digital
14 Controller I (TC100)
15 Controller II (TC200)
16 Controller III (TC300)
17 Controller IV (TC400)

catalog

Once upon a time 00 indicated a standard catalog unit, and 01 and up indicated the presence of customizing options and/or accessories. That distinction is no longer used and these digits have no special significance any more.

Interface defined

This statement defines NESLAB's policy towards access and contents of various control loops for TC200, TC300, and TC400 controller applications. It is provided by the Measurement and Control group.

With an increasing number of controller applications it is important to maintain consistency in the way we code our operator interface. The goal is to minimize the effort to code, build, test, document, use, and service our products.

Unless the customer specification specifically requests a different approach, the operator interface will be programmed in the following manner. Private loops are those requiring a proprietary access code, as described in this manual.

Operator's loop (public): This is the default power-up loop. This loop is for basic display information and the location of the process setpoint adjustment, flow 1, flow 2, resistivity, etc.

Setup/tune loop (public): This loop contains any other adjustments the customer is expected to access. Consider this an advanced user's loop. If the customer is expected to change it, then it goes here. Example: Proportional-integral-derivative (PID) values, alarm setpoints, communication enable and parameters, remote sensor enable, selection of °F or °C display, etc.

Configuration loop (private): This loop is used by NESLAB production to enter any factory settings. These are not intended to be changed after the initial setting. Some designs may not have anything in the Configuration Loop. Example: injector setpoint and settings, high and low span, interlocks or cutouts, 50/60 Hz power selection, etc.

Calibration loop (private): This loop allows the operator to calibrate temperature and other variables to reference instruments.

Service loop (private): This is intended for service personnel to aid in field trouble-shooting. The service loop allows the controller inputs and outputs to be monitored and changed for testing of the electrical control system and components. Each application needs an unique one page service sheet that defines the controller inputs/outputs before the service loop can be used.

Documentation: The operators manual will only contain the operator's loop and setup/tune loop information. The appendix of the operators manual may also contain the calibration loop information. The service manual will contain all the different loops.

Mark Sinclair
Measurement and Control Manager

Navigating the loops

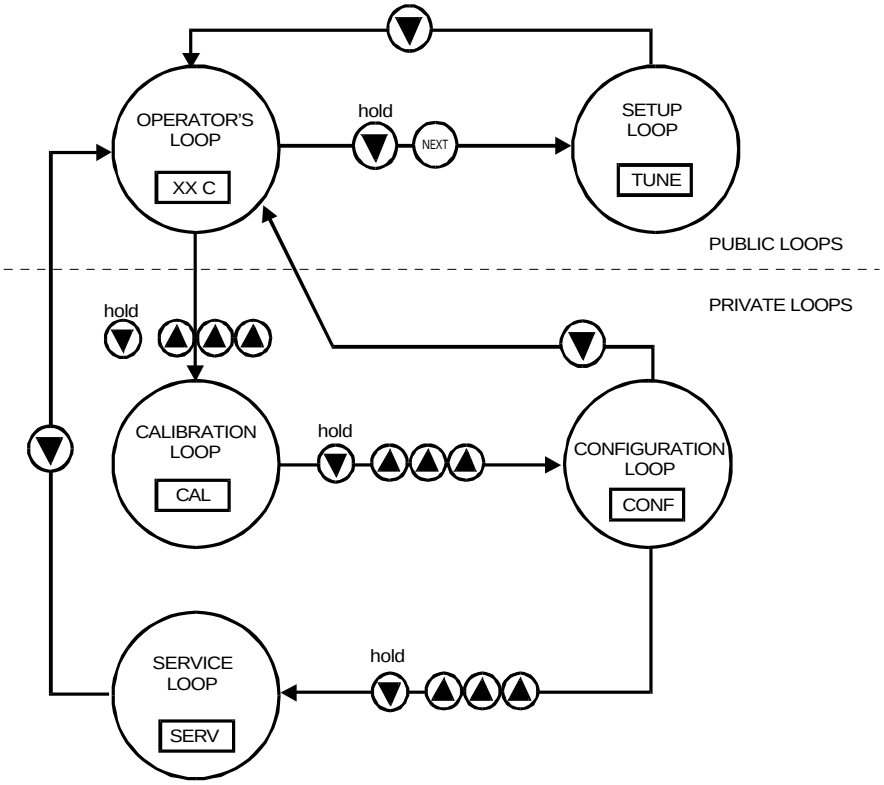

Operator's loop

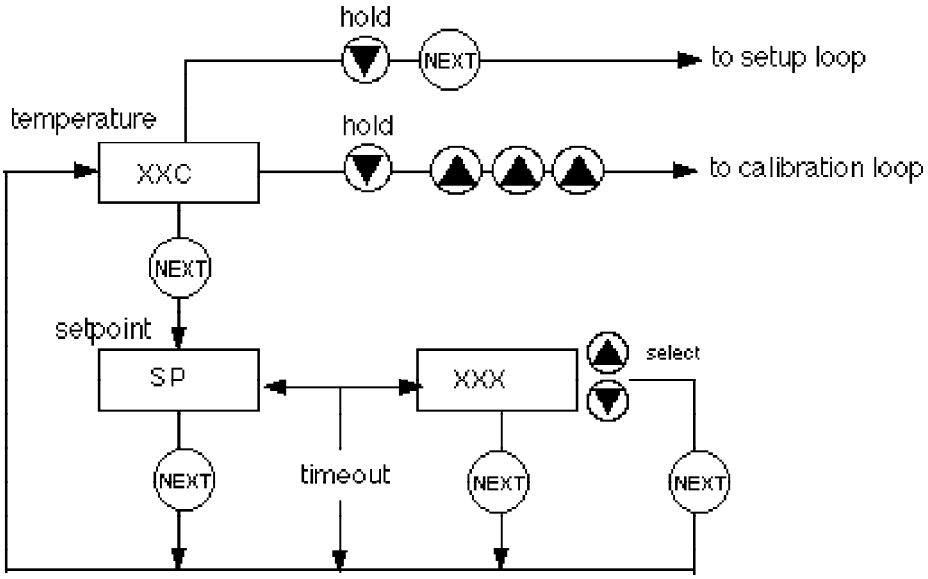

Setup loop - part 1

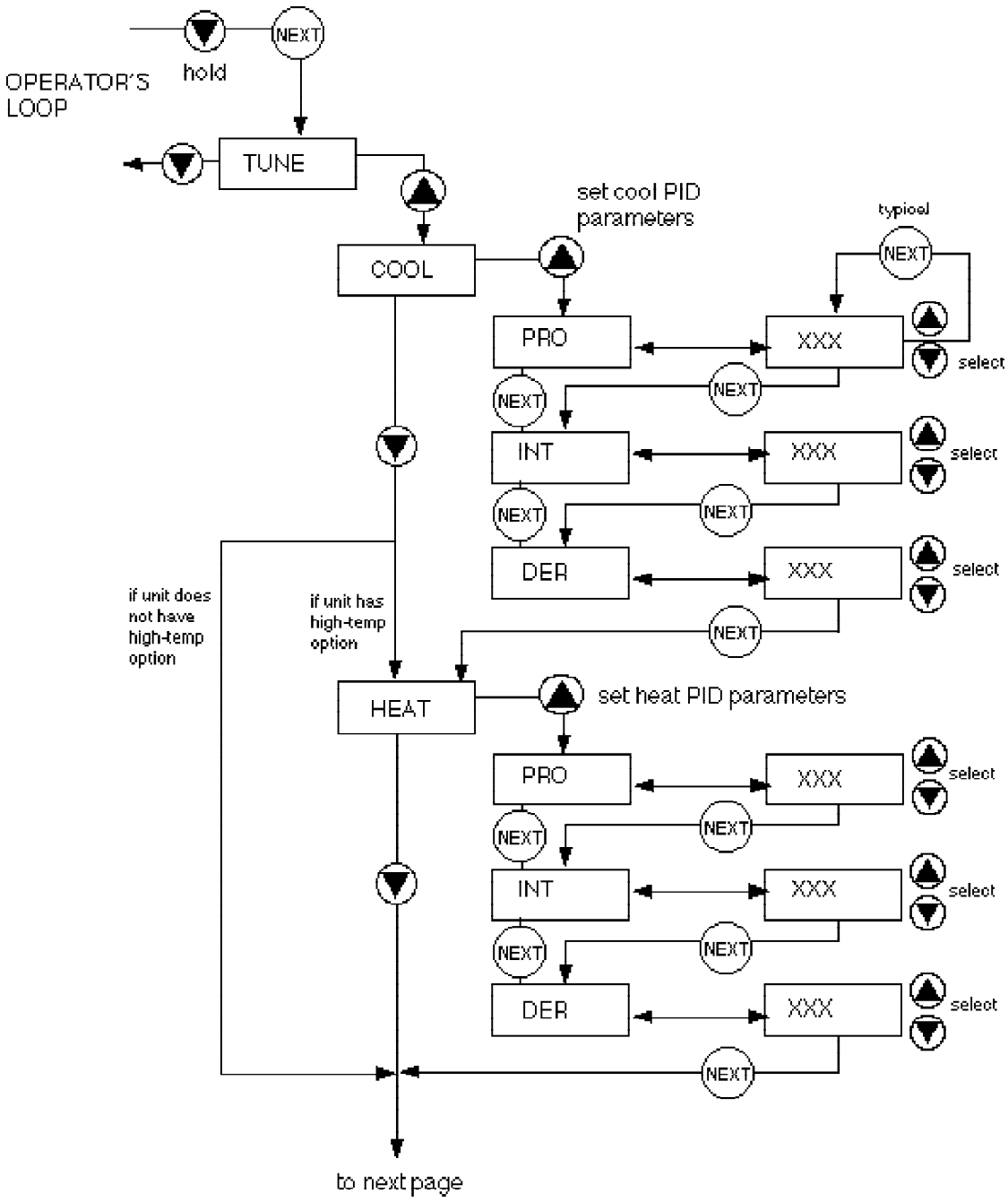

Setup loop - part 2

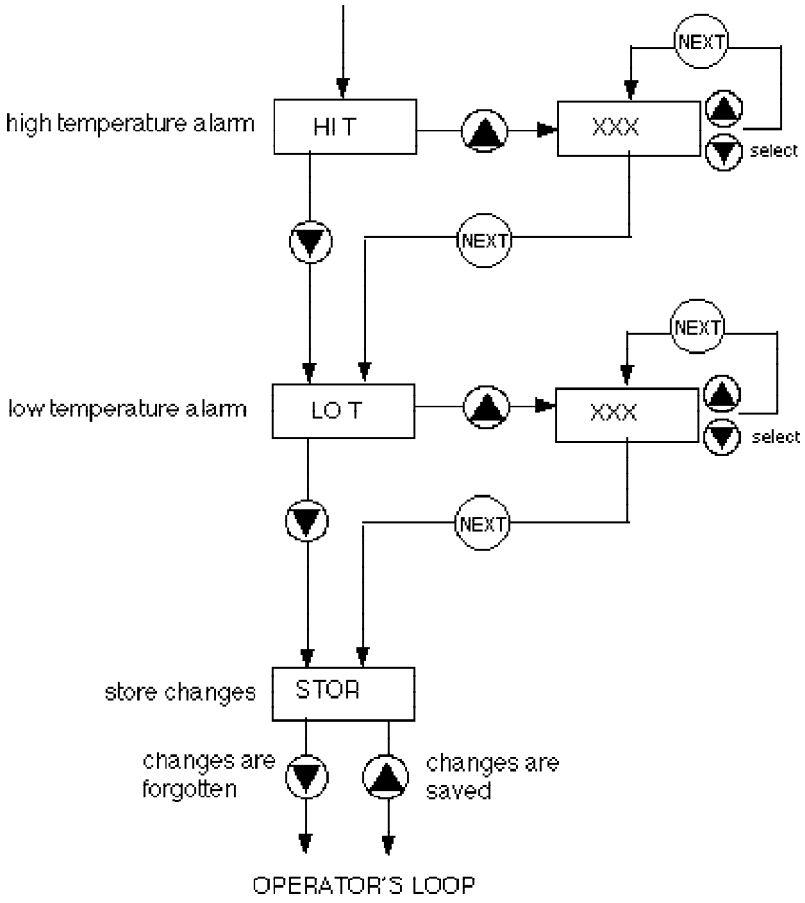

Calibration loop

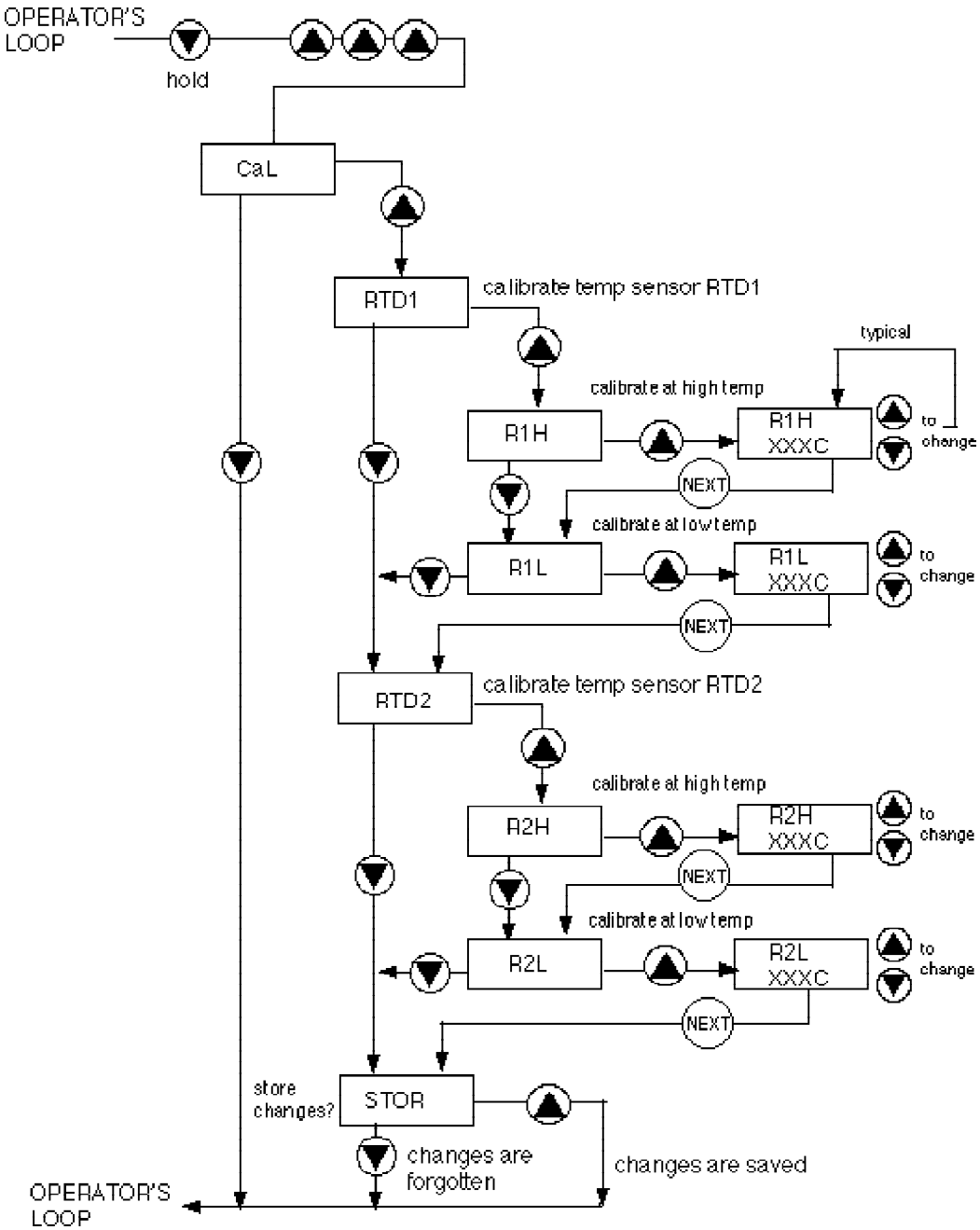

Configuration loop

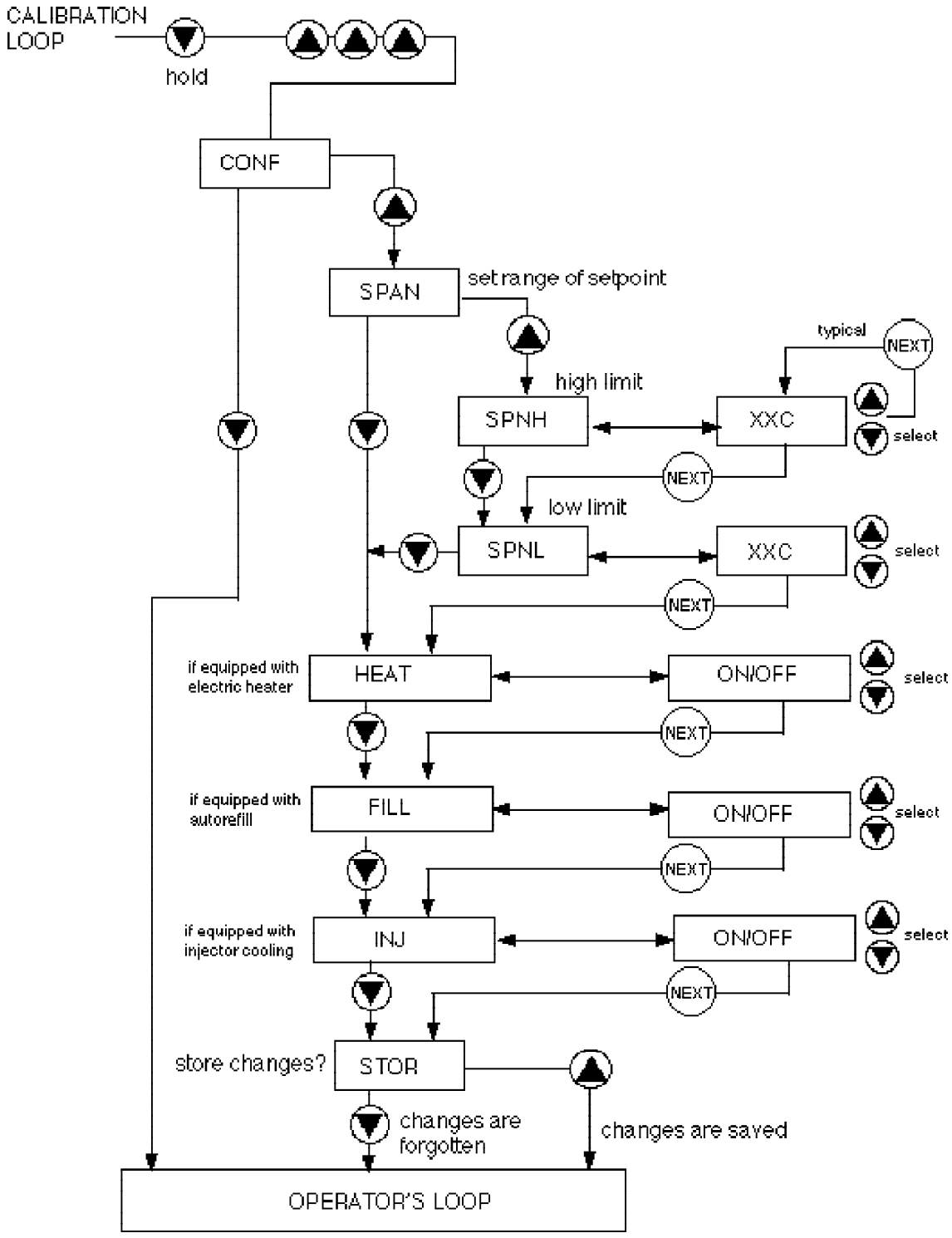

Service loop

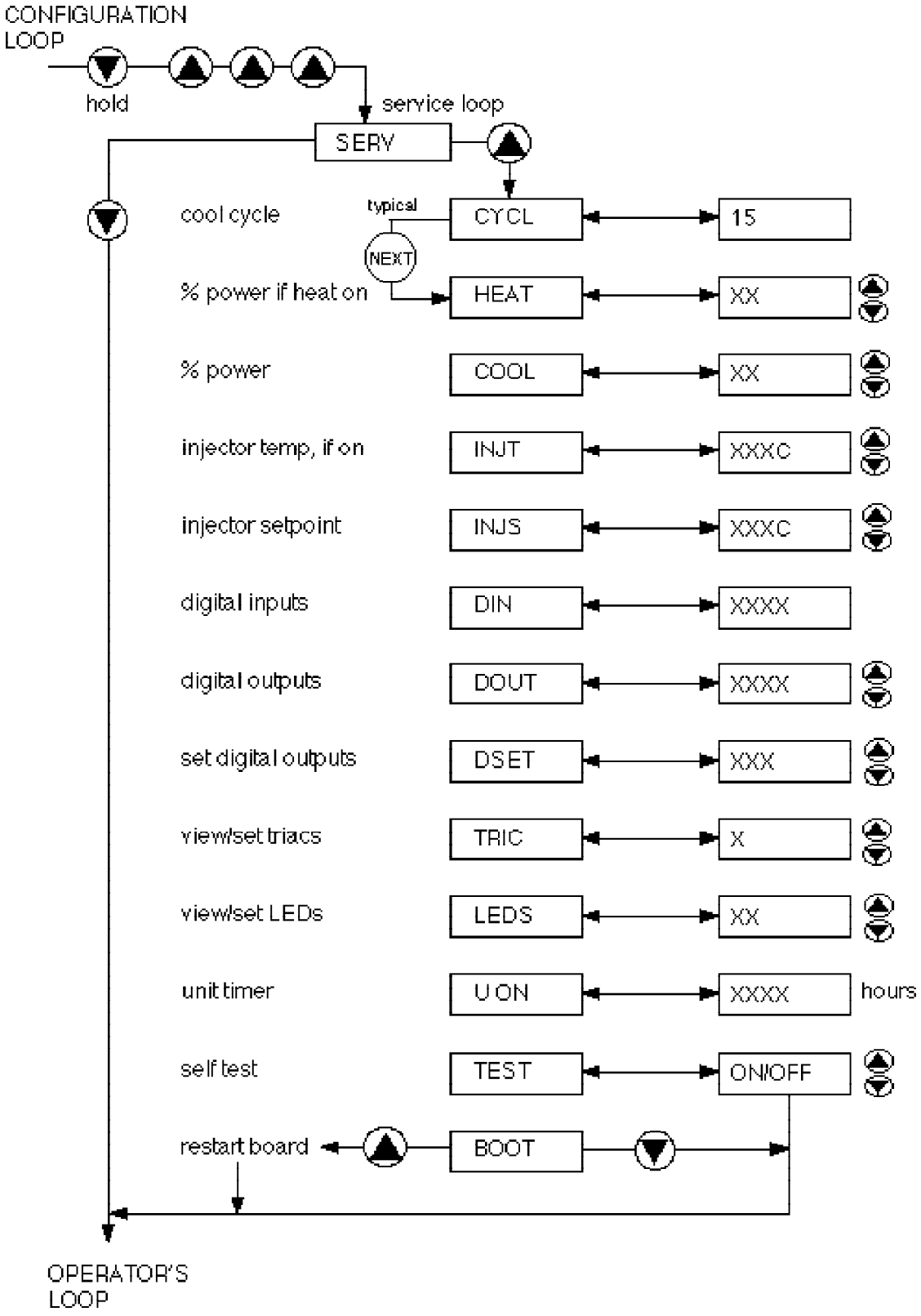

Displaying software version

The TC-200 controller has a function which will show the installed software version number on the unit's digital display.

For example, for a unit with software version **000550.45B**:

1. Unit is running normally and displaying temperature.

2. Press and hold the NO key for at least 10 seconds.
The display will show the digits to the left of the decimal (for example): **0550**
(note the two leading zeros are not shown).

3. Press the NEXT key.
The display will show the digits to the right of the decimal (for example): **45**

4. Press the NEXT key.
The display will show the revision letter, as its equivalent number, with A=1, B=2, etc. (for example): **2**

5. Press the NEXT key.
The digits shown may be disregarded.

6. Press the NEXT key.
The display returns to normal, displaying temperature.

Section III. Service

Troubleshooting

Unit will not start

Check the line cord, make sure it is plugged in.

Check the voltage of the power source. Make sure it is within the rated voltage of the unit, ±10%.

Check that the Power Switch/Circuit Breaker has not tripped.

Check the setting on the optional High Temperature Cutout.

CFT-300 units are equipped with high and low pressure switches. If either switch activates the unit will shut down. Once the cause has been determined you have to manually reset the switch. The switches are located behind the rear panel, see the operation manual.

Unit will not circulate fluid

Check the reservoir level. Fill, if necessary.

Make sure the pump has been purged.

Check the pressure gauge (units with PD pumps). If the reading is 60 psig, check the instrument being cooled for restrictions in the cooling line.

Check the pump strainer (units with PD pumps). A clogged strainer can starve the pump.

Inadequate temperature control

If the temperature continues to rise, make sure the heat load of the instrument being cooled does not exceed the rated specification, see the operating manual for specifications.

Make sure the air intake and discharge are not impeded and the ambient temperature does not exceed +35°C.

Make sure the condenser is free of dust and debris.

If the compressor short-cycles (a clicking sound), check the line voltage. It should be within the 10% of the specified voltage. Wait 5 minutes before restarting the unit.

Symptom	Possible cause	Repair
Compressor will not start - no hum	1. Line disconnect switch open 2. Line fuse (if any) removed or blown 3. Overload protector tripped 4. Wiring improper or loose	1. Close start or disconnect switch 2. Replace fuse 3. Allow compressor to cool 4. Check against wiring diagram
Compressor will not start - hums but trips on overload protector	1. Improperly wired 2. Low line voltage 3. Start capacitor defective 4. Relay failing to close 5. Compressor motor has winding open or shorted 6. Compressor mechanical failure 7. Liquid refrigerant in compressor	1. Check against wiring diagram 2. Determine reason and correct 3. Determine reason and replace 4. Determine reason and correct, replace if necessary 5. Replace compressor 6. Replace compressor 7. Add crankcase heater and/or accumulator
Compressor starts, but does not switch off start winding	1. Improperly wired 2. Low line voltage 3. Relay failing to open 4. Run capacitor defective 5. Excessive discharge pressure 6. Compressor motor has winding open or shorted 7. Compressor mechanical failure	1. Check against wiring diagram 2. Determine reason and correct 3. Determine reason and correct, replace if necessary 4. Determine reason and replace 5. Check discharge shut-off valve, possible overcharge, or insufficient cooling on condenser 6. Replace compressor 7. Replace compressor
Compressor starts and runs, but short cycles on overload protector	1. Additional current passing through overload protector 2. Low line voltage, or unbalanced if three-phase 3. Overload protector defective 4. Run capacitor defective 5. Excessive discharge pressure 6. Suction pressure too high 7. Compressor too hot, return gas hot 8. Compressor motor has a winding shorted	1. Check wiring diagram. Check for added fan motors, pumps, etc., connected to wrong side of protector 2. Determine reason and correct. 3. Check current, replace protector 4. Determine reason and replace 5. Check ventilation, restrictions in recirculating fluid path, restrictions in refrigeration system 6. Check for possibility of misapplication. Use stronger unit 7. Check refrigerant charge (fix leak), add if necessary 8. Replace compressor
Unit runs but continually stops and restarts	1. Overload protector 2. High temperature cutout, if so equipped 3. High pressure cutout due to: a. insufficient air or water supply b. overcharge c. air in system 4. Low pressure cutout due to: a. liquid line solenoid leaking b. compressor valve leak c. undercharge d. restriction in expansion device	1. See entire section above 2. Heat load too high, fluid flow too low 3a. Check air or water supply to condenser 3b. Reduce refrigerant charge 3c. Purge 4a. Replace 4b. Replace 4c. Fix leak, add refrigerant 4d. Replace device

Symptom	Possible cause	Repair
Unit operates long or continuously	1. Shortage of refrigerant 2. Control contacts stuck closed 3. Refrigerated fluid has excessive load or poor insulation 4. System inadequate to handle load 5. Evaporator coil iced 6. Restriction in refrigeration system 7. Dirty condenser 8. Air filter (if any) dirty	1. Fix leak, add charge 2. Clean contacts or replace 3. Determine fault and correct 4. Replace with larger system 5. Defrost 6. Determine location and remove 7. Clean condenser 8. Clean on replace
Start capacitor open, shorted, or blown	1. Relay contacts not operating properly 2. Prolonged operation on start cycle due to: a. low voltage to unit b. improper relay c. starting load too high 3. Excessive short cycling 4. Improper capacitor	1. Clean contacts, replace relay if needed 2a. Determine reason and correct 2b. Replace 2c. Correct 3. Determine reason and correct 4. Determine correct size and replace
Run capacitor open, shorted, or blown	1. Improper capacitor 2. Excessively high line voltage (110% of rated maximum)	1. Determine correct size and replace 2. Determine reason and correct
Relay defective or burned out	1. Incorrect relay 2. Incorrect mounting angle 3. Line voltage too high or too low 4. Excessive short cycling 5. Relay being influenced by loose vibrating mounting 6. Incorrect run capacitor	1. Check and replace 2. Remount relay in correct position 3. Determine reason and correct 4. Determine reason and correct 5. Remount rigidly 6. Replace with proper capacitor
Recirculating fluid temperature too high	1. Control setpoint too high 2. Expansion valve too small 3. Evaporator too small 4. Inadequate air circulation through condenser	1. Reset setpoint. 2. Use larger valve. 3. Add surface area or replace 4. Improve air movement
Suction line frosted or sweating	1. Expansion valve passing excess refrigerant or is oversized 2. Expansion valve stuck open 3. Overcharge of refrigerant	1. Readjust valve or replace with smaller valve 2. Clean valve of foreign particles, replace if necessary 3. Correct charge
Liquid line frosted or sweating	1. Restriction in drier or strainer 2. Liquid shut off (king valve) (if so equipped) partially closed	1. Replace part 2. Open valve fully
Unit noisy	1. Loose parts or mountings 2. Tubing rattle 3. Bent fan blade causing vibration 4. Fan motor bearings worn	1. Find and tighten 2. Reform to be free of contact 3. Replace blade 4. Replace motor

Microprocessor replacement

1. WARNING: Physically disconnect unit from line voltage.

2. Use proper Electro-Static Discharge (ESD) protection procedures. A wrist strap is mandatory, at a minimum. NESLAB is not responsible for replacement of integrated circuits damaged by ESD.

3. A Plastic Leaded Chip Carrier (PLCC) extraction tool is required.

4. Remove wrapper of unit.

5. Remove the cover from the control box. On CFT-25, 33, and 75 there are four screws. On CFT-150 and larger, there are only two screws.

6. CFT-25, 33, and 75 only: The control box assembly must be pulled outside the case to allow access room. Remove the two nuts that hold the control box assembly to the case. Tip the control box assembly out of the hole in the case. Remove the secondary cover (the one with all the strain reliefs mounted to it).

Note: On CFT-150 and larger, there is adequate access room. The control box assembly may remain mounted to the case.

7. Observe the pin orientation of the old microprocessor chip. Remove it using the PLCC extraction tool. Install the new microprocessor chip, making sure the pin 1 designation on the microprocessor chip (a dimple in the middle of one side) and the socket (generally a triangle pointer on the socket or the circuit board) align. DO NOT USE THE ORIENTATION OF THE PAPER LABEL FOR ALIGNMENT. THE PAPER LABEL ORIENTATION IS ARBITRARY.

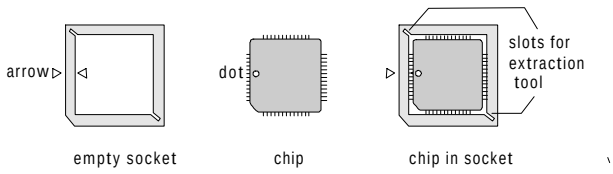

8. Reassemble the unit and all covers.

9. Plug unit in and turn it on. Error messages will appear. Press ENTER/NEXT after each error message until the temperature display appears.

10. The unit is now operational, but calibration has been lost. Calibrate unit per instructions in this manual.

Error codes

On power up:

These messages will be displayed on the controller. The controller will wait for someone to press the next/enter key. Once the “next/enter” key is pressed the controller will restore factory defaults and begin to run. For example if “Err1” is on the controller display at power up, this indicates the internal ram is messed up.

Er01 - Ram test failure
Er02 - Keypad failure, shorted keypad
Er03 - Critical checksum failure, will restore all factory defaults.
Er04- Non-Critical checksum failure, will restore 1/2 of factory values, keeps calibration, PID, restore setpoint

Unusual Hardware Conditions

These errors will flash on the display and cannot be cleared. These are internal controller problems.

Er04 thru Er15 - Interrupt errors during runtime

Functional/ Machine errors

These are the runtime/ logic errors these errors will clear themselves once the problem disappears.

Er16 - Bad calibration data - recalibrate controller
Er19 - Low temperature alarm
Er21 - High temperature alarm
Er22 - High tank temperature
Er23 - Shorted RTD2
Er24 - Open RTD2
Er25 - Shorted RTD1
Er26 - Open RTD1
Er31 - Low level fault
ADD - Low level alarm

Section IV. Adjustments

Factory defaults

Cool PID values:	Pro	20	Int	0.5	Der	0
Heat PID values:	Pro	5	Int	0.5	Der	0

Alarms

Hi temp	90
Lo temp	-20

Span

CFT25/33/75 standard temp	Lo limit 5	Hi limit 30
CFT25/33/75 high temp	Lo limit 5	Hi limit 85
CFT25/33/75 low temp	Lo limit -15	Hi limit 30
CFT150/300 standard temp	Lo limit 5	Hi limit 35
CFT150/300 high temp	Lo limit 5	Hi limit 85
CFT150/300 low temp	Lo limit -15	Hi limit 35

Cool cycle 15

Restoring factory defaults

This procedure will restore all controller values to the factory default settings (which vary by product).

1. Begin in the Operator's loop, displaying temperature as normal.

2. Hold NO, and while holding it, press YES, YES, YES. This should result in the Calibration Loop, with the display indicating "CaL".

3. Hold NO, and while holding it, press YES, YES, YES. This should result in the Configuration Loop, with the display indicating "ConF".

4. Hold NO, and then press and hold NEXT/ENTER for seven seconds minimum. This should result in the display indicating "reSt" (meaning RESTORE).

5. Press YES. The controller will restore the factory default settings and return to the Operator's Loop.

Field calibration



The unit is calibrated at the factory. Changing any values will nullify temperature indications. The calibration loop should only be used by qualified factory or service personnel. Improper calibration can affect product temperature measurements.

Requirements

Temperature calibration is performed at two different temperatures.
Calibration will be valid at and between those temperatures.
The unit must run at both of these temperatures in turn to be calibrated.

A reference thermometer is required.

Choosing calibration points

Decide what two temperatures you wish to use as calibration points. The temperatures chosen must be within the operating range of the unit (5° - 30°C), achievable, and measurable using a reference thermometer. Calibration will be most valid when the two points are as separated as possible, i.e. 5°C and 30°C. If the unit is only operated at one temperature (for example, 22°C), you may wish to optimize calibration at that point by choosing closer calibration points; such as 20° and 24°C.

Procedure - overview

The general procedure consists of:

1. From operator’s loop, adjust setpoint to lower calibration point
2. Allow unit to achieve the lower calibration point.
3. Go to calibration loop, enter the reference thermometer value.
4. Go to operator’s loop, adjust setpoint to higher calibration point
5. Allow unit to achieve the higher calibration point.
6. Go to calibration loop, enter the reference thermometer value.

Note: The calibration points are independent.
The higher point may be set first if more convenient.

The step-by-step procedure follows.

Begin in the Operator's Loop

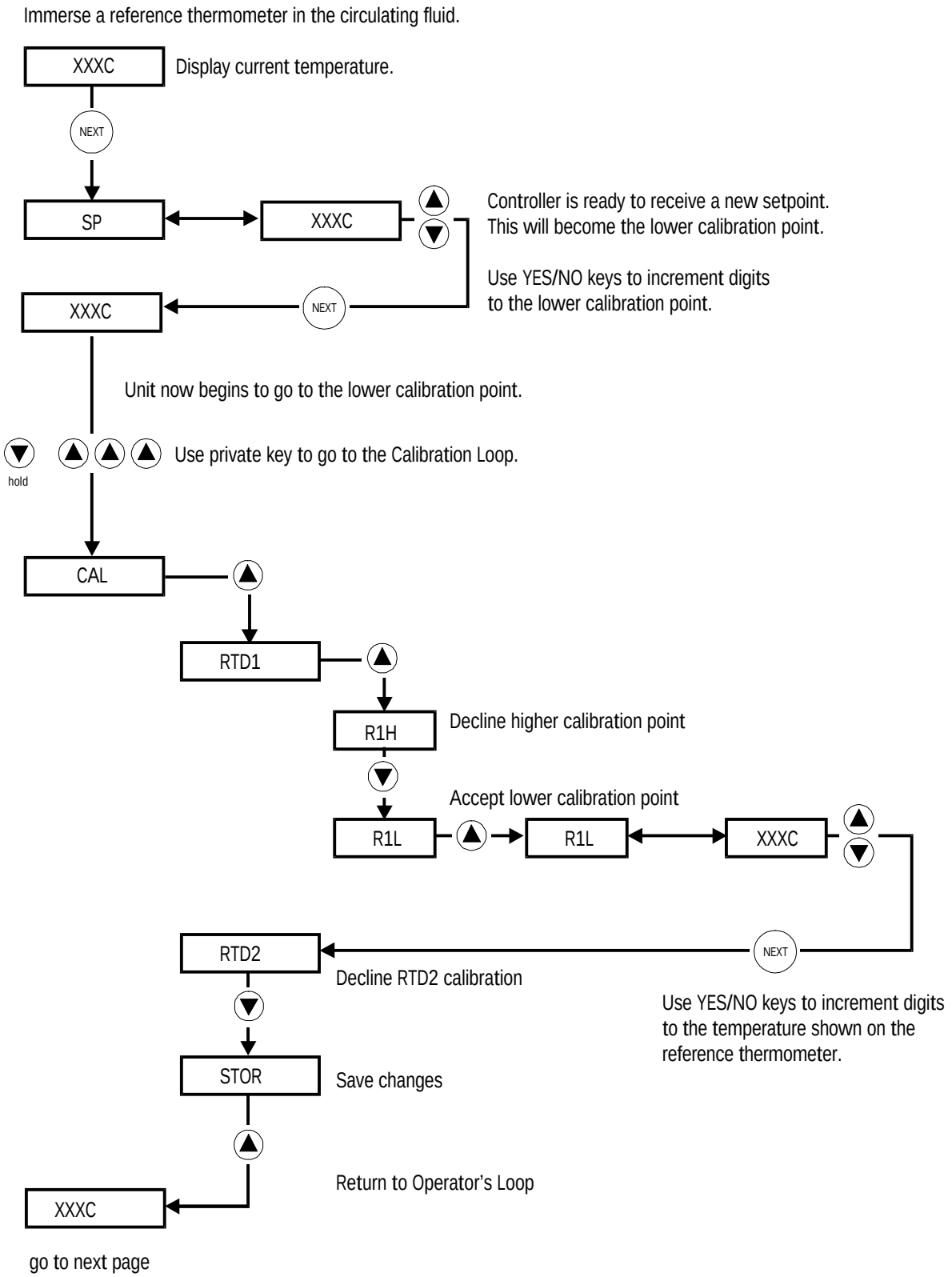

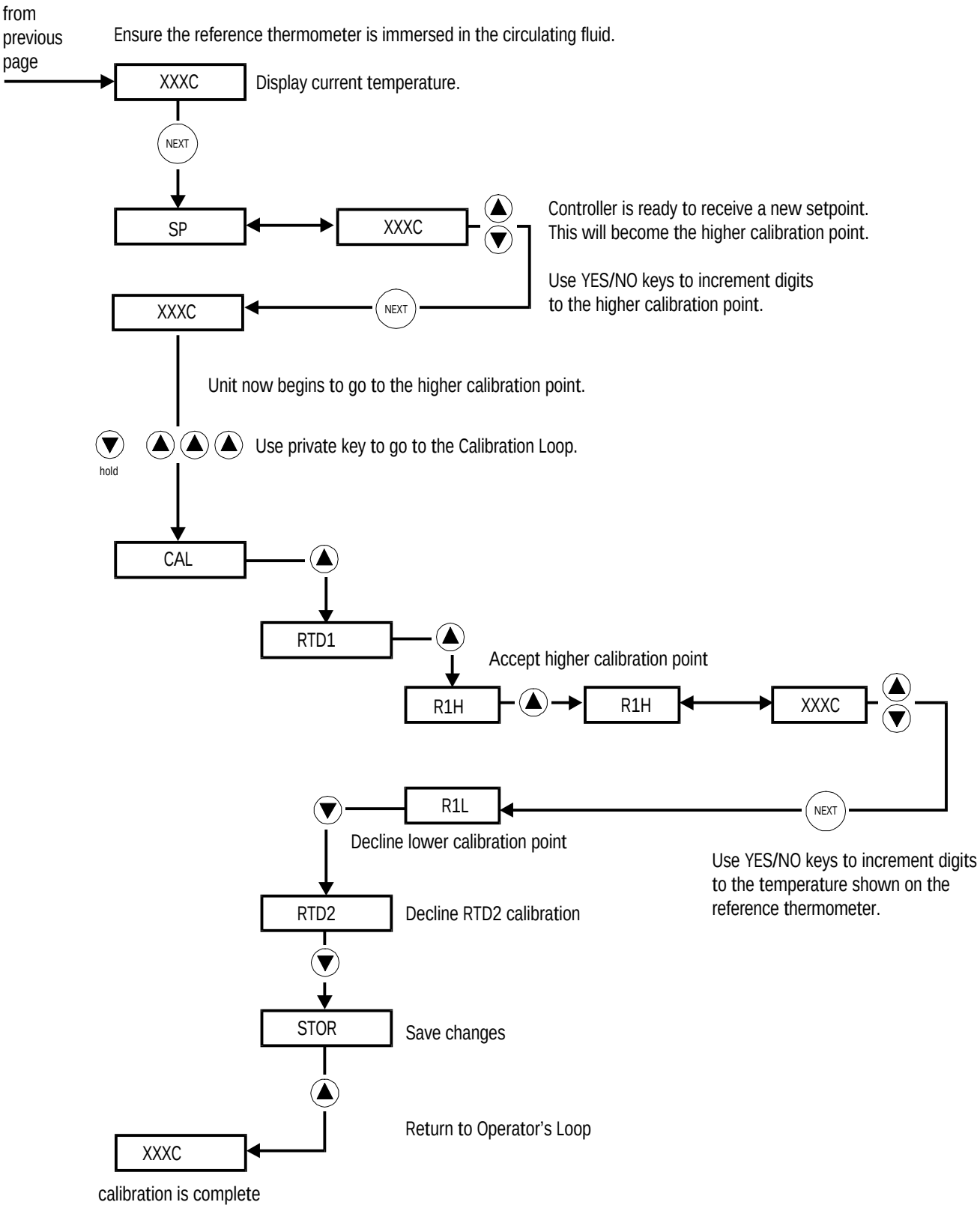
from previous page
Ensure the reference thermometer is immersed in the circulating fluid.
XXXC
Display current temperature.
NEXT
SP
XXXC
Controller is ready to receive a new setpoint.
This will become the higher calibration point.
Use YES/NO keys to increment digits to the higher calibration point.
XXXC
NEXT
Unit now begins to go to the higher calibration point.
hold
Use private key to go to the Calibration Loop.
CAL
RTD1
Accept higher calibration point
R1H
R1H
XXXC
R1L
NEXT
Decline lower calibration point
Use YES/NO keys to increment digits to the temperature shown on the reference thermometer.
RTD2
Decline RTD2 calibration
STOR
Save changes
Return to Operator's Loop
XXXC
calibration is complete

Hot gas valve

The hot gas valve is adjusted as follows.



WARNING: Disconnect unit from line voltage.

1. Attach refrigerant gauges and verify that the refrigerant charge is approximately correct.
2. Start unit and allow it to stabilize.
3. Turn unit setpoint up so unit remains in the heat/idle cycle.
4. Observe suction pressure gauge.
5. Compare reading of gauge to that in the refrigerant data table.
6. Adjust valve, if necessary, to comform to the table.
7. Turn unit off.



WARNING: Disconnect unit from line voltage.

8. Remove refrigerant gauges.

Section V. Preventive maintenance

For personal safety and equipment reliability, the following procedure should only be performed by a qualified technician. Contact our Service Department for assistance (see After-sale Support).

Service contracts

NESLAB offers on-site Service Contracts that are designed to provide extended life and minimal down-time for your unit. For more information, contact our Service Department (see After-sale Support).

Draining the reservoir

The CFT-300 is equipped with a ½ inch FPT DRAIN fitting located on the rear of the unit.

To drain the CFT-25 to CFT-150 reservoirs we recommend the use of a wet/dry vacuum. Remove the reservoir plug and carefully insert the wet/dry vacuum so as not to damage the cooling coils. **NOTE:** Tilting the unit more than 45° may allow compressor oil to seep into the suction line.

Cleaning

Reservoir

Periodically inspect the fluid inside the reservoir. If cleaning is necessary, flush the reservoir with a cleaning fluid compatible with the circulating system and the cooling fluid.

The cooling fluid should be replaced periodically. When operating at low temperatures, the concentration of water in the cooling fluid will increase over time, leading to a loss of cooling capacity.

Before changing the cooling fluid, raise the operating temperature of the unit to de-ice the cooling coils. Refer to the operating manual for instructions on replacing the cooling fluid.

Condenser

For proper operation, the unit needs to pull substantial amounts of air through a condenser. A build up of dust or debris on the fins of the condenser will lead to a loss of cooling capacity.

The lower front of the unit has a one-piece grille assembly. Gently pry the assembly off with a flathead screwdriver. Use care not to scratch the paint.

Periodic vacuuming of the condenser fins is necessary. The frequency of cleaning depends on the operating environment. We recommend a visual inspection of the condenser be made monthly after initial installation. After several months, the frequency of cleaning will be established.

Algae

To restrict the growth of algae in the reservoir, it is recommended that the reservoir cover be kept in place and that all circulation lines be opaque. This will eliminate the entrance of light which is required for the growth of most common algae.

NESLAB recommends the use of Chloramine-T, 1 gram per 3.5 liters.

Pump strainer

Units with PD pumps have a strainer. Refer to the pump label on the rear of the unit to identify the type of pump in your unit.

If debris is in the system, the strainer will prevent the material from being drawn into the pump and damaging the pump vanes.

After initial installation, the strainer may become clogged with debris and scale. Therefore, the strainer must be cleaned after the first week of installation. After this first cleaning, a monthly visual inspection is recommended. After several months, the frequency of cleaning will be established.

Before cleaning the strainer, disconnect the power cord from the power source and drain the reservoir.

PD-1 pumps have a wire mesh strainer located in the pump head. PD-2 pumps have the strainer located in the pump suction line.

Remove the wrapper from the unit. Unscrew the larger of the two acorn nuts on the pump head and remove the screen.

Clean the screen by rinsing it with water.

When the screen is clean, replace it in the strainer, tighten the acorn nut and replace the wrapper. Refer to the operating manual for instructions on replacing the cooling fluid.

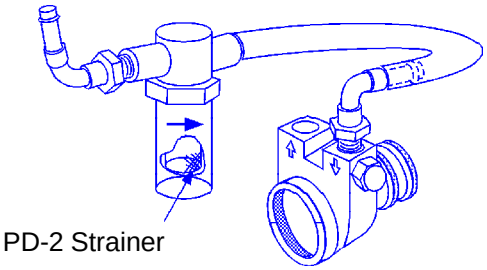

PD-2 Strainer

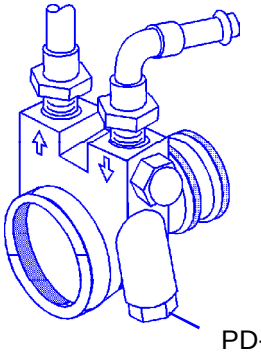

PD-1 Strainer

Pump motor lubrication

PD pump motors require periodic lubrication. Refer to the pump label on the rear of the unit to identify the type of pump in your unit.

PD pumps use sleeve type bearings with large reservoirs. Oiling instructions are generally posted on each motor. In the absence of instructions, add approximately 30 to 35 drops of SAE 20 non-detergent oil to each bearing on the following schedule (SAE 20 = 142 CS viscosity):

Duty Cycle	Oiling Frequency
Continuous	Once every year
Intermittent	Once every 2 years
Occasional	Once every 5 years

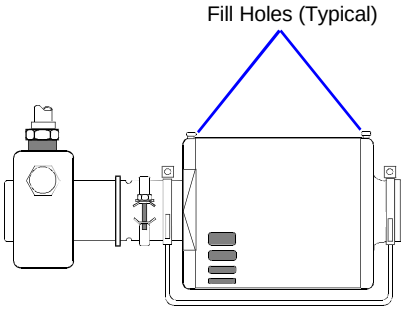

Torque

V-band clamp

The V-band clamp (which joins the pump to the motor) should be tightened to **15 - 30 inch-pounds** (85 - 170 cm/kg) of torque.

Hose clamps

The unit's internal and external hoses and clamps should be inspected and tightened on at least a semiannual basis. If the unit uses standard clear reinforced hose (with the reinforcement webbing visible in the wall of the hose), tighten hose clamps to **50 in/lbs** (280 cm/kg).

Note that this type hose will cold-flow, so the clamps will need to retorqued later after the hose conforms to the clamps. (Be aware the hose clamps do not actually loosen, but rather the hose O.D. decreases under them!)

It is best to give them a final torqueing just prior to leaving the job site. It is wise to explain to the customer that a further torqueing may be required the following day - and that a drip developing at the hose clamp is a result of this cold-flow and not poor workmanship.

Section VI. Reference

refrigerant data

Model	CFT-25	CFT-33	CFT-75	CFT-150	CFT-300	CFT-300
Pump	any	any	any	any	CP55,TU5,TU6	PD2
Refrigerant	R-134a	R-134a	R-134a	R-22	R-22	R22
Amount	4 oz	7 oz	13.75 oz	29 oz	8.5-9.5 lbs	8.5-9.5 lbs
Amount (metric)	115 g	200 g	390 g	822 g	3.8-4.3 kg	3.8-4.3 kg
Hot gas setting (PSIG)	5	5	5	25	25	25
Hot gas setting (kPa)	35	35	35	172	172	172
Ambient (°F)	68	68	68	68	74	74
Fluid temp (°C)	20	20	20	20	20	20
Suction pressure (PSIG)	25-28	42-45	37-41	70	85-90	88-94
Suction pressure (kPa)	172-193	290-310	255-282	480	585-620	605-650
Discharge pressure (PSIG)	145-160	180-200	170-185	270	265-280	265-280
Discharge pressure (kPa)	1000-1100	1240-1380	1175-1275	1860	1827-1930	1827-1930
Speed check (°C/min)	4.0	2.5	4.6	2.8	6.4	6.4

6024

material safety data sheet (MSDS)

A Material Safety Data Sheet (MSDS) is designed to provide both workers and emergency personnel with the proper procedures for handling or working with that substance. MSDS will include information such as physical data (melting point, boiling point, flash point etc.), toxicity, health effects, first aid, reactivity, storage, disposal, protective equipment, and spill/leak procedures. These are of particular use if a spill or other accident occurs. This Material Safety Data Sheets is provided as a public service. It was gathered from a variety of sources. **Neither NESLAB Instruments, Inc., nor any of its agents are liable for the accuracy, or inaccuracy, of the Material Safety Data Sheet**. You assume the liability for the use of any part of this Material Safety Data Sheet.

R-134a refrigerant

DUPONT E I — SUVA COLD-MP, SUVA 134A
MATERIAL SAFETY DATA SHEET
FSC: 6830
NIIN: 00D003276
Manufacturer's CAGE: 02348
Part No. Indicator: A
Part Number/Trade Name: SUVA COLD-MP, SUVA 134A
==========
General Information
==========
Company's Name: DU PONT E I DE NEMOURS & CO
Company's Street: 1007 MARKET ST
Company's City: WILMINGTON
Company's State: DE
Company's Country: US
Company's Zip Code: 19899
Company's Emerg Ph #: 800-441-7515/800-441-3637
Company's Info Ph #: 800-441-7515
Record No. For Safety Entry: 001
Tot Safety Entries This Stk#: 001
Status: SE
Date MSDS Prepared: 12MAR94
Safety Data Review Date: 14JUL94
Supply Item Manager: CX
MSDS Preparer's Name: ENGIN. & PRODUCT SAFETY
Preparer's Company: DUPONT CHEMICALS
Preparer's St Or P. O. Box: POB 80709, CHESTNUT RUN
Preparer's City: WILMINGTON
Preparer's State: DE
Preparer's Zip Code: 19880-0709
MSDS Serial Number: BTRLM
Specification Number: NOT KNOWN
Hazard Characteristic Code: G3
Unit Of Issue: UK
Unit Of Issue Container Qty: UNKNOWN
Type Of Container: UNKNOWN
Net Unit Weight: UNKNOWN
==========
Ingredients/Identity Information
==========
Proprietary: NO
Ingredient: 1,1,1,2-TETRAFLUOROETHANE
Ingredient Sequence Number: 01
Percent: 100
NIOSH (RTECS) Number: 1008365TE
CAS Number: 811-97-2
OSHA PEL: NOT ESTABLISHED
ACGIH TLV: NOT ESTABLISHED
Other Recommended Limit: NONE RECOMMENDED
==========
Physical/Chemical Characteristics
==========
Appearance And Odor: LIQUEFIED GAS, SLIGHT ETHEREAL ODOR, COLORLESS.
Boiling Point: -16F,-27C
Melting Point: N/A
Vapor Pressure (MM Hg/70 F): 96PSIA@25C
Vapor Density (Air=1): 3.60 @25C
Specific Gravity: N/A
Decomposition Temperature: N/A
Solubility In Water: 0.15WT% @25C/14.7PSI
Percent Volatiles By Volume: 100
pH: N/A
==========
Fire and Explosion Hazard Data
==========
Flash Point: WILL NOT BURN

Lower Explosive Limit: N/A
Upper Explosive Limit: N/A
Extinguishing Media: AS APPROPRIATE FOR COMBUSTIBLES IN AREA.
Special Fire Fighting Proc: COOL CYLINDERS W/WATER SPRAY. SELF-CONTAINED BREATHING APPARATUS MAY BE REQUIRED IF CYLINDERS RUPTURE OR RELEASE UNDER FIRE CONDITIONS.
Unusual Fire And Expl Hazrds: CYLINDERS MAY RUPTURE UNDER FIRE CONDITONS. DECOMPO MAY OCCUR.EXPERIMENTAL DATA HAVE REPORTED COMBUST OF MATL IN PRESENCE OF CERTAIN CONCEN OF CHLORINE.SEE SUPPL

Reactivity Data

Stability: YES
Cond To Avoid (Stability): AVOID OPEN FLAMES AND HIGH TEMPERATURE. ALSO GLOWING METAL SURFACES.
Materials To Avoid: ALKALI OR ALKALINE EARTH METALS-POWDERED ALUMINUM, ZINC, BERYLIUM, ETC. CERTAIN CONCENTRATIONS OF CHLORINE.
Hazardous Decomp Products: DECOMPOSES @ HI TEMP FORMING HYDROFLUORIC ACID AND POSSIBLY CARBONYL FLUORIDE.
Hazardous Poly Occur: NO
Conditions To Avoid (Poly): NOT RELEVANT.

Health Hazard Data

LD50-LC50 Mixture: DUPONT'S 1000PPM, 8 & 12 HR TWA.
Route Of Entry - Inhalation: YES
Route Of Entry - Skin: YES
Route Of Entry - Ingestion: NO
Health Haz Acute And Chronic: INHAL OF HI CONCEN OF VAPOR IS HARMFUL & MAY CAUSE HEART IRREGULARITIES, UNCONSCIOUSNESS OR DEATH. VAPOR REDUCES OXYGEN AVAILABLE FOR BREATHING & IS HEAVIER THAN AIR. LIQ CONTACT CAN CAUSE FROSTBITE.
Carcinogenicity - NTP: NO
Carcinogenicity - IARC: NO
Carcinogenicity - OSHA: NO
Explanation Carcinogenicity: PER MSDS:NONE OF COMPONENTS PRESENT IN MATL @ CONCEN = OR < 0.1% ARE LISTED BY IARC,NTP, OSHA OR ACGIH AS A CARCINOGEN.
Signs/Symptoms Of Overexp: OVEREXOSURE BY INHAL TO VERY HI CONCEN MAY CAUSE TEMP ALTERATION OF THE HEART'S ELECTRICAL ACTIVITY WITH IRREGULAR PULSE, PALPITATIONS, OR INADEQUATE CIRCULATION. SKIN CONTACT WITH THE LIQUID MAY CAUSE FROSTBITE.
Med Cond Aggravated By Exp: INDIVIDUALS WITH PRE-EXISTING DISEASES OF THE CENTRAL NERVOUS OR CARDIOVASCULAR SYSTEM MAY HAVE INCREASED SUSCEPTIBILITY TO THE TOXICITY OF EXCESSIVE EXPOSURES.
Emergency/First Aid Proc: INHAL:IMMED REMOVE TO FRESH AIR.KEEP PERSON CALM.NOT BREATH GIVE ARTIF RESP.BREATH DIFFI GIVE OXY.CALL DR. SKIN:IMMED FLUSH W/LOTS OF H2O FOR @ LEAST 15MINS.REMOVE CONTAM CLOTH/SHOE.CALL DR. TREAT FOR FROSTBITE IF NECESSARY BY GENTLY WARMING AFFECTED AREA.EYE:IMMED FLUSH W/LOTS OF H2O FOR @ LEAST 15MINS.CALL DR. DR:BECAUSE POSSIBLE DISTRUBANCES OF CARDIAC RHYTHM USE CATECHOLAMINE DRUGS CAUTIOUSLY.

Precautions for Safe Handling and Use

Steps If Matl Released/Spill: REVIEW FIRE FIGHTING MEASURES BEFORE PROCEEDING W/CLEANUP.USE APPROPRIATE PPE DURING CLEANUP.VENTI AREAESPECIALLY LOW OR ENCLOSED PLACES WHERE HEAVY VAPORS COLLECT.REMOVE OPEN FLAMES.USE SCBA IF LG SPILL OR LEAK OCCURS.
Neutralizing Agent: NOT SPECIFIED BY MANUFACTURER.
Waste Disposal Method: CONTAMINATED HFC-134A CAN BE RECOVERED BY DISTILLATION OR REMOVED TO A PERMITTED WASTE DISPOSAL FACILITY. COMPLY WITH LOCAL, STATE AND FEDERAL REGULATIONS.
Precautions-Handling/Storing: STORE IN CLEAN, DRY AREA. DO NOT HEAT ABOVE 52C. USE W/SUFFICIENT VENTILATION TO KEEP EMPLOYEE EXPOSURE BELOW RECOMMENDED LIMITS.
Other Precautions: HFC-134A SHOULD NOT BE MIXED W/AIR FOR LEAK TESTING OR USEDS W/AIR FOR ANY OTHER PURPOSE ABOVE ATMOSPHERIC PRESSURE. SEE FIRE & EXPLOSION DATA & SUPPLEMENTAL SECS. CONTACT W/CHLORINE OR OTHER STRONG OXIDIZING AGENTS SHOULD ALSO BE AVOIDED.

Control Measures

Respiratory Protection: UNDER NORMAL MANUFACTURING CONDITIONS NO RESPIRATORY PROTECTION IS REQUIRED WHEN USING THIS PRODUCT. SELF-CONTAINED BREATHING APPARATUS (SCBA) IS REQUIRED IF A LARGE RELEASE OCCURS.
Ventilation: NORMAL VENTILATION FOR STANDARD MANUFACTURING PROCEDURES IS GENERALLY ADEQUATE.
Protective Gloves: IMPERVIOUS GLOVES.
Eye Protection: CHEM SPLASH GOGGLES.
Other Protective Equipment: NONE SPECIFIED BY MANUFACTURER.
Work Hygienic Practices: WASH CONTAMINATED CLOTHING/SHOE PRIOR TO REUSE.
Suppl. Safety & Health Data: MATL NOT FLAMM @ AMBIENT TEMP & ATM

PRESSURE.TESTS HAVE SHOWN COMBUSTIBLE @ PRESSURE AS LOW AS 5.5 PSIG @ 177C WHEN MIXED W/AIR @ CONCEN OF GENERALLY MORE THAN 60 VOLUME % AIR.AT LOWER TEMP,HIGHER PRESSURE ARE REQUIRED FOR COMBUSTIBILITY. DO NOT USE IN MED APPLICATINS INVOLVING PERMANENT IMPLANTATION IN THE HUMAN BODY.
==========
Transportation Data
==========
Trans Data Review Date: 94195
DOT PSN Code: DQQ
DOT Proper Shipping Name: COMPRESSED GASES, N.O.S. *
DOT Class: 2.2
DOT ID Number: UN1956
DOT Label: NONFLAMMABLE GAS
IMO PSN Code: EQH
IMO Proper Shipping Name: COMPRESSED GAS, N.O.S. *
IMO Regulations Page Number: 2125
IMO UN Number: 1956
IMO UN Class: 2(2.2)
IMO Subsidiary Risk Label: -
IATA PSN Code: HDO
IATA UN ID Number: 1956
IATA Proper Shipping Name: COMPRESSED GAS, N.O.S. * *
IATA UN Class: 2.2
IATA Label: NON-FLAMMABLE GAS
AFI PSN Code: HDO
AFI Prop. Shipping Name: COMPRESSED GAS, N.O.S.
AFI Class: 2.2
AFI ID Number: UN1956
AFI Label: NON-FLAMMABLE GAS
AFI Basic Pac Ref: 6-6,6-8,6-10
N.O.S. Shipping Name: COMPRESSED OR LIQUIFIED GAS, N.O.S (TETRAFLUOROETHANE).

R-22 refrigerant

E I DUPONT — FREON 22 - MONOCHLORODIFLUOROM
MATERIAL SAFETY DATA SHEET
NSN: 6830013825105
Manufacturer's CAGE: 18873
Part No. Indicator: A
Part Number/Trade Name: FREON 22
==========
General Information
==========
Item Name: MONOCHLORODIFLUOROM
Company's Name: E I DUPONT DE NEMOURS & CO
Company's Street: 1007 MARKET ST
Company's City: WILMINGTON
Company's State: DE
Company's Country: US
Company's Zip Code: 19898
Company's Emerg Ph #: 800-441-3637;800-424-9300(CHEMTREC)
Company's Info Ph #: 800-441-9442
Record No. For Safety Entry: 001
Tot Safety Entries This Stk#: 003
Status: SMJ
Date MSDS Prepared: 13AUG92
Safety Data Review Date: 15MAR95
MSDS Serial Number: BXBSX
==========
Ingredients/Identity Information
==========
Proprietary: NO
Ingredient: METHANE, CHLORODIFLUORO-; (CHLORODIFLUOROMETHANE) (SARA 313) (CERCLA)
Ingredient Sequence Number: 01
Percent: 100
NIOSH (RTECS) Number: PA6390000
CAS Number: 75-45-6
OSHA PEL: 1000 PPM
ACGIH TLV: 1000 PPM
———————————————-
Proprietary: NO
Ingredient: SUP DAT: IN THE PRESENCE OF CERTAIN CONCENTRATIONS OF CHLORINE.
Ingredient Sequence Number: 02
NIOSH (RTECS) Number: 9999999ZZ
OSHA PEL: NOT APPLICABLE
ACGIH TLV: NOT APPLICABLE

Proprietary: NO
Ingredient: VENT: VENTILATION SHOULD BE USED IN LOW OR ENCLOSED PLACES.
Ingredient Sequence Number: 03
NIOSH (RTECS) Number: 9999999ZZ
OSHA PEL: NOT APPLICABLE
ACGIH TLV: NOT APPLICABLE

Proprietary: NO
Ingredient: OTHER PREC: “FREON 22” SHOULD NOT BE MIXED W/AIR FOR LEAK TESTING. IN GEN, IT SHOULD NOT BE USED/ALLOWED TO BE (ING 5)
Ingredient Sequence Number: 04
NIOSH (RTECS) Number: 9999999ZZ
OSHA PEL: NOT APPLICABLE
ACGIH TLV: NOT APPLICABLE

Proprietary: NO
Ingredient: ING 4: PRESENT W/HIGH CONCS OF AIR ABOVE ATMOSPHERIC PRESS. CONT W/CHLORINE/OTHER STRONG OXIDIZING AGENTS SHOULD (ING 6)
Ingredient Sequence Number: 05
NIOSH (RTECS) Number: 9999999ZZ
OSHA PEL: NOT APPLICABLE
ACGIH TLV: NOT APPLICABLE

Proprietary: NO
Ingredient: ING 5: ALSO BE AVOIDED.
Ingredient Sequence Number: 06
NIOSH (RTECS) Number: 9999999ZZ
OSHA PEL: NOT APPLICABLE
ACGIH TLV: NOT APPLICABLE

Proprietary: NO
Ingredient: EFTS OF OVEREXP: OVEREXP. SKIN CONT W/LIQUID MAY CAUSE FRSTBT. INDIVIDUALS W/PREEXISTING DISEASES OF CNS OR (ING 8)
Ingredient Sequence Number: 07
NIOSH (RTECS) Number: 9999999ZZ
OSHA PEL: NOT APPLICABLE
ACGIH TLV: NOT APPLICABLE

Proprietary: NO
Ingredient: ING 7: CARDIOVASCULAR SYSTEM MAY HAVE INCREASED SUSCEPTIBILITY TO TOXICITY OF EXCESSIVE EXPOSURES.
Ingredient Sequence Number: 08
NIOSH (RTECS) Number: 9999999ZZ
OSHA PEL: NOT APPLICABLE
ACGIH TLV: NOT APPLICABLE
Other Recommended Limit: YN/KNONE RECOMMENDED

Proprietary: NO
Ingredient: HLTH HAZ: RANGING FROM 5% TO 70% INCLUDE EFTS ON CNS, LIVER, LUNGS, KIDNEYS, SPLEEN; CARDIAC SENSIT; DECREASED (ING 10)
Ingredient Sequence Number: 09
NIOSH (RTECS) Number: 9999999ZZ
OSHA PEL: NOT APPLICABLE
ACGIH TLV: NOT APPLICABLE

Proprietary: NO
Ingredient: ING 9: BODY WT GAIN, & PARTIAL ANESTH. IN CHRONIC INHAL STUDIES FC-22 PRODUCED A SM, BUT STATISTICALLY (ING 11)
Ingredient Sequence Number: 10
NIOSH (RTECS) Number: 9999999ZZ
OSHA PEL: NOT APPLICABLE
ACGIH TLV: NOT APPLICABLE

Proprietary: NO
Ingredient: ING 10: SIGNIFICANT, INCREASE OF TUMORS IN MALE RATS, BUT NOT FEMALE RATS OR MALE/FEMALE MICE AT A CONC OF (ING 12)
Ingredient Sequence Number: 11
NIOSH (RTECS) Number: 9999999ZZ
OSHA PEL: NOT APPLICABLE
ACGIH TLV: NOT APPLICABLE

Proprietary: NO
Ingredient: ING 11: 50000 PPM (V/V). FC-22 WAS MUTAGENIC IN BACTERIAL CELL CULTURES BUT NOT MAMMALIAN CELL CULTURES, & WAS (ING 13)
Ingredient Sequence Number: 12
NIOSH (RTECS) Number: 9999999ZZ
OSHA PEL: NOT APPLICABLE
ACGIH TLV: NOT APPLICABLE

Proprietary: NO

Ingredient: ING 12: NOT MUTAGENIC IN WHOLE ANIMAL ESSAYS. A SLIGHT, BUT SIGNIFICANT INCREASE IN DEVEL TOXICITY (EYE (ING 14)
Ingredient Sequence Number: 13
NIOSH (RTECS) Number: 9999999ZZ
OSHA PEL: NOT APPLICABLE
ACGIH TLV: NOT APPLICABLE
———————————————————-
Proprietary: NO
Ingredient: ING 13: MALFORMATIONS, DECR FETAL WTS) HAS BEEN OBSERVED IN OFFSPRING OF RATS EXPOSED TO HIGH CONCS (50000 PPM) (ING 15)
Ingredient Sequence Number: 14
NIOSH (RTECS) Number: 9999999ZZ
OSHA PEL: NOT APPLICABLE
ACGIH TLV: NOT APPLICABLE
———————————————————-
Proprietary: NO
Ingredient: ING 14: OF FC-22, CONC WHICH WAS ALSO MATERNALLY TOXIC. BASED ON FINDINGS, FC-22 IS NOT CONSIDERED A UNIQUE HAZ (ING 16)
Ingredient Sequence Number: 15
NIOSH (RTECS) Number: 9999999ZZ
OSHA PEL: NOT APPLICABLE
ACGIH TLV: NOT APPLICABLE
———————————————————-
Proprietary: NO
Ingredient: ING 15: TO CONCEPTUS & POSES NO CARCIN HAZ WHEN EXPOSURES ARE BELOW TLV. CHLOROFLUOROCARBON (CFC) MATLS HAVE (ING 17)
Ingredient Sequence Number: 16
NIOSH (RTECS) Number: 9999999ZZ
OSHA PEL: NOT APPLICABLE
ACGIH TLV: NOT APPLICABLE
———————————————————-
Proprietary: NO
Ingredient: ING 16: PRODUCED SENSIT OF MYOCARDIUM TO EPINEPHRINE IN LAB ANIMALS & COULD HAVE A SIMILAR EFT IN HUMANS. (ING 18)
Ingredient Sequence Number: 17
NIOSH (RTECS) Number: 9999999ZZ
OSHA PEL: NOT APPLICABLE
ACGIH TLV: NOT APPLICABLE
———————————————————-
Proprietary: NO
Ingredient: ING 17: ADRENOMIMETICS (E.G., EPINEPHRINE) MAY BE CONTRAINDICATED EXCEPT FOR LIFE-SUSTAINING USES IN HUMANS (ING 19)
Ingredient Sequence Number: 18
NIOSH (RTECS) Number: 9999999ZZ
OSHA PEL: NOT APPLICABLE
ACGIH TLV: NOT APPLICABLE
———————————————————-
Proprietary: NO
Ingredient: ING 18: ACUTELY OR CHRONICALLY EXPOSED TO CFC'S.
Ingredient Sequence Number: 19
NIOSH (RTECS) Number: 9999999ZZ
OSHA PEL: NOT APPLICABLE
ACGIH TLV: NOT APPLICABLE
———————————————————-
Proprietary: NO
Ingredient: % VOLAT: 100 (WT).
Ingredient Sequence Number: 20
NIOSH (RTECS) Number: 9999999ZZ
OSHA PEL: NOT APPLICABLE
ACGIH TLV: NOT APPLICABLE
==========

Physical/Chemical Characteristics

==========
Appearance And Odor: CLEAR, COLORLESS LIQUEFIED GAS WITH SLIGHT ETHEREAL ODOR
Boiling Point: -41F,-41C
Vapor Pressure (MM Hg/70 F): 151 PSIG
Vapor Density (Air=1): 3.03
Specific Gravity: 1.194
Evaporation Rate And Ref: >1
Solubility In Water: 0.30 WT % @ 25C
Percent Volatiles By Volume: ING 20
pH: NEUT
==========

Fire and Explosion Hazard Data

==========
Flash Point: NONE
Flash Point Method: TOC
Extinguishing Media: AS APPROPRIATE FOR COMBUSTIBLES IN AREA. EXTINGUISHANT FOR OTHER BURNING MATERIAL IN AREA IS SUFFICIENT TO STOP

BURNING.
Special Fire Fighting Proc: WEAR NIOSH/MSHA APPRVD PRESSURE DEMAND SCBA & FULL PROT EQUIP (FP N). USE WATER SPRAY/FOG TO COOL CONTAINERS.
Unusual Fire And Expl Hazrds: THERMAL DECOMP PRODS MAY INCLUDE CHLORIDES, FLUORIDES & PHOSGENE (FP N). OTHER BURNING MATLS MAY CAUSE HCFC 22 TO BURN WEAKLY. CHLORODIFLUOROMETHANE (SUP DAT)

==========

Reactivity Data

==========

Stability: YES
Cond To Avoid (Stability): AVOID OPEN FLAMES AND HIGH TEMPERATURES.
Materials To Avoid: ALKALI OR ALKALINE EARTH METALS (POWDERED AL, ZN, BE, ETC.).
Hazardous Decomp Products: HIGH TEMPS (OPEN FLAMES, GLOWING METAL SURFS, ETC.) FORMING HYDROCHLORIC & HYDROFLUORIC ACIDS, & POSS CARBONYL (SUP DAT)
Hazardous Poly Occur: NO
Conditions To Avoid (Poly): NOT RELEVANT.

==========

Health Hazard Data

==========

LD50-LC50 Mixture: NONE SPECIFIED BY MANUFACTURER.
Route Of Entry - Inhalation: YES
Route Of Entry - Skin: YES
Route Of Entry - Ingestion: NO
Health Haz Acute And Chronic: INHAL OF HIGH CONCS OF VAP IS HARMFUL & MAY CAUSE IRREGULARITIES, UNCONSCIOUSNESS/DEATH. INTENTIONAL MISUSE/DELIBERATE INHAL MAY CAUSE DEATH WITHOUT WARNING. VAP REDUCES OXYGEN AVAILABLE FOR BRTHG & IS HVR/AIR. LIQUID CONT CAN CAUSE FRSTBT. ANIMAL DATA: TOXICITY DESCRIBED IN ANIMALS EXPOSED BY INHAL TO CONCS (ING 9)
Carcinogenicity - NTP: NO
Carcinogenicity - IARC: NO
Carcinogenicity - OSHA: NO
Explanation Carcinogenicity: NOT RELEVANT.
Signs/Symptoms Of Overexp: OVEREXP TO VAPS BY INHAL MAY INCLUDE TEMPORARY NERVS SYS DEPRESS W/ANESTH EFTS SUCH AS DIZZ, HDCH, CONFUSN, INCOORD, & LOSS OF CONSCIOUSNESS. HIGHER EXPOS TO VAPS MAY CAUSE TEMPORARY ALTERATION OF HEART'S ELEC ACTIVITY W/IRREGULAR PULSE, PALPITATIONS/ INADEQUATE CIRCULATION. FATALITY MAY OCCUR FROM GROSS (ING 7)
Med Cond Aggravated By Exp: BECAUSE OF POSSIBLE DISTURBANCES OF CARDIAC RHYTHM, CATECHOLAMINE DRUGS, SUCH AS EPINEPHRINE, SHOULD ONLY BE CONSIDERED AS A LAST RESORT IN LIFE-THREATENING EMERGENCIES.
Emergency/First Aid Proc: INHAL: IF LGE CONCS ARE INHALED, IMMED REMOVE TO FRESH AIR. KEEP PERS CALM. IF NOT BRTHG, GIVE ARTF RESP. IF BRTHG IS DIFFICULT, GIVE OXYGEN. CALL MD. SKIN CONT: FLUSH W/WATER FOR 15 MIN. TREAT FOR FROSTBT IF NEC BY GENTLY WARMING AFFECTED AREA. IF IRRIT IS PRESENT, CALL MD. EYES: IMMED FLUSH W/PLENTY OF WATER FOR AT LEAST 15 MIN. CALL MD. INGEST: NOT CONSIDERED A POTENTIAL ROUTE OF EXPOSURE.

==========

Precautions for Safe Handling and Use

==========

Steps If Matl Released/Spill: NOTE: REVIEW FIRE & EXPLOS HAZ & SFTY PREC BEFORE PROCEEDING W/CLEAN UP. USE APPROP PERSONAL PROT EQUIP DURING CLEAN UP. VENT AREA, ESPECIALLY LOW/ENCLOSED PLACES WHERE HEAVY VAPS MIGHT COLLECT. REMOVE OPEN FLAMES. USE SCBA FOR LGE SPILLS/RELEASES.
Neutralizing Agent: NONE SPECIFIED BY MANUFACTURER.
Waste Disposal Method: COMPLY WITH FEDERAL, STATE, AND LOCAL REGULATIONS. RECLAIM BY DISTILLATION OR REMOVE TO A PERMITTED WASTE DISPOSAL.
Precautions-Handling/Storing: STORE IN CLEAN, DRY AREA. DO NOT HEAT ABOVE 52C (125F).
Other Precautions: NO SMKNG IN AREA OF USE. DO NOT USE IN GEN VICIN OF ARC WELDING, OPEN FLAMES/HOT SURFS. HEAT &/UV RADIA MAY CAUSE FORM OF CHLORIDES, FLUORIDES &/PHOSGENE (FP N). USE W/SUFFICIENT VENT TO KEEP EMPLOYEE EXPOS BELOW RECOMMENDED LIMITS. (ING 4)

==========

Control Measures

==========

Respiratory Protection: UNDER NORMAL MANUFACTURING CONDITIONS, NO RESPIRATORY PROTECTION IS REQUIRED WHEN USING THIS PRODUCT. USE NIOSH/MSHA APPROVED SCBA WHEN A LARGE RELEASE OCCURS.
Ventilation: NORM VENT FOR STANDARD MFG PROC IS GEN ADEQ. LOC EXHAUST SHOULD BE USED WHEN LARGE AMOUNTS ARE RELEASED. MECH (ING 3)
Protective Gloves: IMPERVIOUS GLOVES (FP N).
Eye Protection: ANSI APPRVD CHEM WORKERS GOGGS(FP N).
Other Protective Equipment: EMERGENCY EYEWASH & DELUGE SHOWER MEETING ANSI DESIGN CRITERIA (FP N).
Work Hygienic Practices: NONE SPECIFIED BY MANUFACTURER.
Suppl. Safety & Health Data: HAZ DECOMP PROD: HALIDES, PHOSGENE (FP N).
EXPLO HAZ: IS NOT FLAM AT AMBIENT TEMPS & ATMOSPHERIC PRESS. HOWEVER IT HAS BEEN SHOWN IN TESTS TO BE COMBUST AT PRESS AS LOW AS 60 PSIG AT AMBIENT TEMP WHEN MIXED W/AIR AT CONCS OF 65 VOL & AIR. EXPTL DATA HAVE ALSO BEEN REPORTED WHICH INDICATE COMBUST OF “FREON” 22 (ING 2)

==========
Transportation Data
==========
Trans Data Review Date: 95254
DOT PSN Code: IIC
DOT Proper Shipping Name: LIQUEFIED GASES
DOT Class: 2.2
DOT ID Number: UN1058
DOT Label: NONFLAMMABLE GAS
IMO PSN Code: IZR
IMO Proper Shipping Name: LIQUEFIED GASES,NON-FLAMMABLE,CHARGED WITH NITROGEN,CARBON DIOXIDE OR AIR
IMO Regulations Page Number: 2155
IMO UN Number: 1058
IMO UN Class: 2(2.2)
IMO Subsidiary Risk Label: -
IATA PSN Code: PDL
IATA UN ID Number: 1058
IATA Proper Shipping Name: LIQUEFIED GASES
IATA UN Class: 2.2
IATA Label: NON-FLAMMABLE GAS
AFI PSN Code: PDL
AFI Prop. Shipping Name: LIQUEFIED GASES
AFI Class: 2.2
AFI ID Number: UN1058
AFI Label: NON-FLAMMABLE GAS
AFI Basic Pac Ref: 6-6,6-8
==========
Disposal Data
==========
==========
Label Data
==========
Label Required: YES
Technical Review Date: 16MAR95
Label Date: 16MAR95
Label Status: G
Common Name: FREON 22
Chronic Hazard: NO
Signal Word: WARNING!
Acute Health Hazard-Slight: X
Contact Hazard-Moderate: X
Fire Hazard-None: X
Reactivity Hazard-None: X
Special Hazard Precautions: ACUTE: INHALATION OF VAPORS MAY CONTRIBUTE TO THE OCCURRENCE OF IRREGULAR HEART BEAT (FP N). CONTACT WITH LIQUID MAY NONE SPECIFIED BY MANUFACTURER.
Protect Eye: Y
Protect Skin: Y
Protect Respiratory: Y
Label Name: E I DUPONT DE NEMOURS & CO
Label Street: 1007 MARKET ST
Label City: WILMINGTON
Label State: DE
Label Zip Code: 19898
Label Country: US
Label Emergency Number: 800-441-3637;800-424-9300(CHEMTREC)
==========
URL for this msds http://siri.org. If you wish to change, add to, or
delete information in this archive please sent updates to dan@siri.org.

Service bulletin
U00336
30 Sep. 1998

CFT75: solenoid valve change

1. What units are affected?

model:	**CFT 75 R134A ONLY (not R22 or R12)**
part numbers:	**395xxxxxxxxx**
serial numbers:	**this change occurs at serial number 198223000**
date of manufacture:	**this change occurs August 11, 1998**

2. What is the problem/symptom?

The unit may runaway cold, even though the controller is calling for heating.

3. What is the cause?

The installed liquid line solenoid valve (PN 009475 - type XUP) is not optimum for this application.

4. What is the fix?

The solenoid valve is replaced by a different one (PN 009741 - type XWG).

5. Should we fix any existing units (rework or recall units in the field)?

It is not necessary to service any units that operate correctly. If a unit exhibits this symptom, the valve should be replaced with the new one. The coil is the same and may be reused.

6. How do I get replacement parts or more information?

Consult NESLAB Technical Service.

7. Need more information?

Current service information is available 24 hours a day on NESLAB ONLINE. Service information is available on the NESLAB OFFLINE 1998 cd-rom.

Service manual **000877** is available for CFT75 units using traditional (“Banks”) controllers with a controller code of 01 or 02 (the controller code is the ninth and tenth digits of the 12-digit unit part number). This manual is available on paper, on cd-rom, and online. Service manual **U00320** is available for CFT75 units using the newer TC200 controllers with a controller code of 15 (the controller code is the ninth and tenth digits of the 12-digit unit part number). This manual is available on paper, or online.

Refer to PCO (Product Change Order) **12173.**

Test sheets are available on microfiche at all NESLAB offices.

Service bulletin
U00349
18 May 1999

1. What units are affected?

model: **CFT-33**

part numbers: **394106031501 394106031502 394106031503 394106031504 394106041501 394106041502 394106041503 394106041504 394106041505 394106041506 394106121501 394106991501 394106991502**

serial numbers (approximate range): **196270001 to 199130001**

date of manufacture: **from late 1996 to May 1999**

2. What is the problem/symptom?

When main power is applied the compressor will not start and the compressor motor overload quickly trips. The start capacitor will appear to be shorted when checked with an ohmmeter.

3. What is the cause?

Wires may have been incorrectly attached to the start capacitor by the condensing unit manufacturer so that the capacitor is shorted. Actual short is between the wire terminal and the end cap of the bleeder resistor. A shorted capacitor can not participate in the compressor start cycle and as a result the compressor motor may not start.

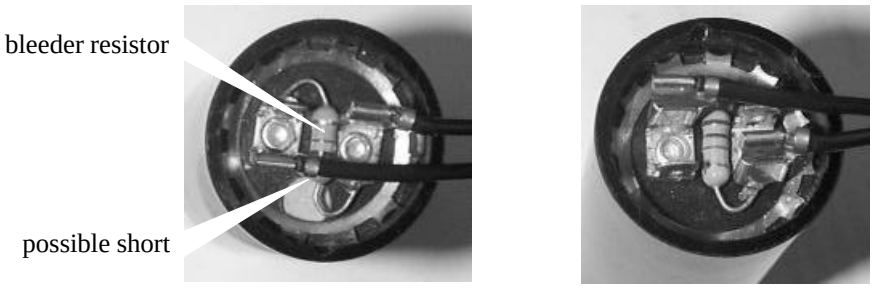

wrong right

4. What is the fix?

If capacitor is wired incorrectly, disconnect from line voltage and rewire start capacitor as indicated. Replace bleeder resistor if the enamel is damaged. Unit should now start normally.

5. Should we fix any existing units (rework or recall units in the field)?

All units returned for servicing should be checked for correct capacitor wiring. Units found to be incorrectly wired should be reworked as shown.

6. Who can I call for help?

Our Technical service group is ready to help you sort out issues involving product performance.

Year 2000 statement

NESLAB Instruments, Inc.
P.O. Box 1178 Portsmouth, NH 03802-1178 800/258-0830 FAX (603 436-8411)
Revised 18 May 1999
Subject: Y2K Year 2000 Policy Statement

NESLAB Instruments Inc. and the Year 2000. NESLAB Instruments Inc. recognizes the importance of providing our customers with products that will continue to function correctly during the Year 2000 and beyond. NESLAB is also committed to communicating to its customers its status with respect to Year 2000 compliance.

Definition. NESLAB Instruments has adopted the following definition of Year 2000 compliance as set forth by the British Standards Institution in DISC PD2000-1 A Definition of Year 2000 Conformity Requirements (available on the Internet at http://www.bsi.org.uk/disc/year2000.html), with the qualification that the upper limit for compliance is the year 2035:

Year 2000 conformity shall mean that neither performance nor functionality is affected by dates prior to, during, and after the year 2000. In particular:

Rule 1: No value for current date will cause any interruption in operation.
Rule 2: Date-based functionality must behave consistently for dates prior to, during, and after year 2000.
Rule 3: In all interfaces and data storage, the century in any date must be specified either explicitly or by unambiguous algorithms or inferencing rules.
Rule 4: Year 2000 must be recognized as a leap year.

Our Products. It is our goal that our customers can continue to use our Products during and after the Year 2000. NESLAB Instruments has carried out a review of its products with respect to Year 2000 compliance.

There are no current NESLAB products which incorporate clock or calendar functions. Therefore, we believe all of our current products to be Year 2000 compliant.

Additional information about NESLAB Instruments' products can be found at our website (http://www.neslabinc.com).

Internal Business Systems. NESLAB has carried out a review of its products and its internal systems with respect to Year 2000 compliance.

NESLAB houses an IBM AS/400 system that runs MAPICS XA R3 MRP software. This software package is fully Year 2000 compliant. NESLAB also utilizes Windows 95 and other Microsoft products on the desktop; all of these software products are also Year 2000 compliant. In addition, NESLAB will be performing internal testing to further ensure Year 2000 compliance of these systems.

In addition, NESLAB Instruments is contacting its key vendors/suppliers to assess their Year 2000 readiness.

Summary

In summary, NESLAB Instruments, Inc. believes that its products and its internal business systems are currently Year 2000 compliant.

Customer Commitment. NESLAB Instruments recognizes the importance of this issue to our customers. If you have additional questions, please contact Mr. Mike Pratt of our technical support group.

Nothing in this statement is intended to modify rights and obligations under any agreement or to create any new rights or obligations between NESLAB Instruments and our customers.

Sincerely,

James R. Allen
Vice President Finance, Systems & Administration

* Mike Pratt: (603) 430-2245, mike.pratt@neslabinstruments.com

US Headquarters
NESLAB Instruments, Inc.
P.O. Box 1178
Portsmouth, NH 03802-1178
(800) 258-0830
(603) 436-9444
Fax: (603) 436-8411

West Coast
32970 Alvarado/Niles Road
Suite 708
Union City, CA 94587
(800) 423-7831
(510) 429-1890
Fax: (510) 429-1898

Texas and South Central States
8711 Burnet Road
Suite F69
Austin, TX 78757-7065
(512) 459-2167
Fax: (512) 459-1731

Canada
11 Hamilton Crescent
Georgetown, Ontario L7G 5J4
(905) 702-0656
Fax: (905) 702-0629

European Headquarters
The Netherlands
NESLAB Instruments Europa B.V.
Meerenakkerplein 31
5652 BJ
Eindhoven
The Netherlands
31 40-2300456
Fax: 31 40-2549485

United Kingdom
93-96 Chadwick Road
Astmoor, Runcorn, Cheshire
WA71PR UK
44 (019) 28562655
Fax: 44 (019) 28562656

Germany
Industriering Ost 66
D-47906 Kempen
Phone number: 49 2152/1417-30
Fax number: 49 2152/1417-55

France
70, rue Berthie Albrecht
94784 Vitry sur Seine cedex
011 331 43 91 17 00
Fax: 011 331 43 91 17 01

Main Service Center

The NESLAB Main Service Center is open 8:00 am to 5:00 pm (Eastern Time), Monday through Friday.
NESLAB Instruments, Inc.
P.O. Box 1178
Portsmouth, NH 03802-1178
Phone: (800) 258-0830 or (603) 436-9444
Fax: (603) 436-8411

CFT Series
Recirculating Chiller

NESLAB Manual P/N 002167
Rev. 08/20/97

Instruction and Operation Manual



NESLAB online

Product Service Information, Electronic Catalog,
Applications Notes, MSDS Forms, e-mail.

(603)427-2490
Set modem to 8-N-1 protocol, 1200 - 14400 baud

Voice Info: (800) 4-NESLAB

Comments on this manual can be sent to:

NESLAB@lifesciences.com

or visit our Web page at:

http://www.neslabinc.com

CFT Series Recirculating Chiller

PREFACE

Compliance 3
Unpacking 3
Warranty 3
After-sale Support 3

SECTION I
Safety

Warnings 4
Additional Warnings 5

SECTION II
General Information

Description 6
Specifications 6
Cooling Capacity 8
Pump Capacity 8

SECTION III
Installation

Site 9
Electrical Requirements 10
Plumbing Requirements 10
Fluids 11
Water Quality Standards and Recommendations 12
Filling Requirements 14

SECTION IV
Operation

Start Up 15
Analog Temperature Controller 15
Digital Temperature Controller 16
Pressure Relief Valve 16
High Temperature Cutout (Optional) 17
CFT-300 High/Low Pressure Cutouts 17
CFT-150 High Pressure Cutout 17
Heater Package (Optional) 18
External Pressure Regulator (Optional) 19

SECTION V
Maintenance & Service

Service Contracts 20
Draining the Reservoir 20
Cleaning 20
Algae 21
Pump Strainer 21
Pump Lubrication 22
Hoses 22
Suction Discharge Presssure/Speed Check 22

SECTION VI
Troubleshooting

Checklist 23
Service Assistance 23
Pump Flow Diagram 24

WARRANTY

CFT Series Quick Reference Operating Procedures

Installation
The unit has an air-cooled refrigeration system. Air is drawn in the front of the unit and discharged through rear and side. Position the unit so the intake and discharge are not impeded. Inadequate ventilation will cause a reduction in cooling capacity and, in extreme cases, compressor failure.

Excessively dusty areas should be avoided and a periodic cleaning schedule should be instituted. For proper operation, the unit needs to pull substantial amounts of air through a condenser. A build up of dust or debris on the fins of the condenser will lead to a loss of cooling capacity.

The unit will retain its full rated capacity in ambient temperatures up to approximately +24°C.

Make sure the voltage of the power source meets the specified voltage, ±10%.

The plumbing connections are located on the rear of the unit and are labelled either SUPPLY and RETURN or OUTLET and INLET. These connections are ½ inch FPT, ¾ inch FPT for CFT-300s. Remove the plastic protective plugs from both plumbing connections. Connect the OUTLET/SUPPLY fitting to the inlet of the instrument being cooled. Connect the INLET/RETURN fitting to the outlet of the instrument being cooled.

To fill the reservoir remove the reservoir access panel by unscrewing the thumbscrews. Locate the reservoir plug (square nut). Remove the plug and fill the reservoir with clean cooling fluid.

Tap water is the recommended fluid for operation from +8°C to +30°C. Below +8°C, a non-freezing fluid must be used. A mixture of tap water and laboratory grade ethylene glycol is suggested.

Operation
Before starting the unit, double check all electrical and plumbing connections. Make sure the circulating system has been filled with cooling fluid.

To start the unit, place the Power Switch to the on position. The Power Switch illuminates (except for the CFT-150) to indicate the system is operating. To turn the unit off, place the Power Switch to the off position.

The Cool LED indicates the status of the refrigeration system. It illuminates to indicate the refrigeration system is removing heat from the cooling fluid. As the operating temperature approaches the setpoint, the LED will extinguish.

When the unit is shut off, wait approximately five minutes before restarting. This allows time for the refrigeration pressures to equalize. If the pressuresare not allowed to equalize, the compressor will short-cycle and no cooling will occur.

Analog Controller Temperature Adjustment
To adjust the temperature setpoint, turn the °C dial on the front of the unit to the desired temperature.

Digital Controller Temperature Adjustment
To display the temperature setpoint, press and hold the DISPLAY switch. To adjust the temperature setpoint, press and hold the DISPLAY switch and turn the ADJUST knob until the desired temperature setpoint is indicated on the digital display. Once the setpoint is adjusted, release the DISPLAY switch. The display will now indicate the temperature of the fluid in the reservoir.

Periodic Maintenance
Periodically inspect the reservoir fluid. If cleaning is necessary, flush the reservoir with a cleaning fluid compatible with the circulating system and the cooling fluid.

The cooling fluid should be replaced periodically. When operating at low temperatures, the concentration of water in the cooling fluid will increase over time, leading to a loss of cooling capacity.

Before changing the cooling fluid, raise the unit's operating temperature to de-ice the cooling coils.

Periodic vacuuming of the condenser fins is necessary. The frequency of cleaning depends on the operating environment. We recommend a visual inspection of the condenser be made monthly after initial installation. After several months, the cleaning frequency will be established.

Units with PD pumps have a strainer. If debris is in the system, the strainer will prevent the material from being drawn into the pump and damaging the pump vanes.

After initial installation, the strainer may become clogged. The strainer must be cleaned after the first week of installation. After this first cleaning, a monthly visual inspection is recommended. After several months, the frequency of cleaning will be established. Before cleaning, disconnect the power cord from the power source and drain the reservoir.

Preface

Compliance

Products tested and found to be in compliance with the requirements defined in the EMC standards defined by 89/336/EEC as well as Low Voltage Directive (LVD) 73/23/EEC can be identified by the CE label on the rear of the unit. The testing has demonstrated compliance with the following directives:

LVD, 73/23/EEC	Complies with UL 3101-1:93
EMC, 89/336/EEC	EN 55011, Class A Verification
	EN 50082-1:1992
	IEC 1000-4-2:1995
	IEC 1000-4-3:1994
	IEC 1000-4-4:1995

For any additional information refer to the Letter of Compliance that shipped with the unit (Declaration of Conformity).

Unpacking

Retain all cartons and packing material until the unit is operated and found to be in good condition. If the unit shows external or internal damage, or does not operate properly, contact the transportation company and file a damage claim. Under ICC regulations, this is your responsibility.

If this product has been modified to operate at 0°C or lower, it has been tested with a non-freezing fluid. Although the system has been drained, some residual fluid may remain. This will not hinder your unit's performance.

Warranty

Units have a warranty against defective parts and workmanship for one full year from date of shipment. See back page for more details.

After-sale Support

NESLAB is committed to customer service both during and after the sale. If you have questions concerning the unit operation, contact our Sales Department. If your unit fails to operate properly, or if you have questions concerning spare parts or Service Contracts, contact our Service Department.

Before calling, please refer to the labels on the rear of the unit to obtain the following information:

- unit BOM number _____

- unit serial number _____

- pump type _____

Section I Safety

Warnings



Warnings are posted throughout the manual. These warnings are designated by an exclamation mark inside an equilateral triangle and text highlighted in bold. Read and follow these important instructions. Failure to observe these instructions can result in permanent damage to the unit, significant property damage, or personal injury or death.

Make sure you read and understand all instructions and safety precautions listed in this manual before installing or operating your unit. If you have any questions concerning the operation of your unit or the information in this manual, please contact our Sales Department (see After-sale Support).

Never place the unit in a location where excessive heat, moisture, or corrosive materials are present.

The unit construction provides extra protection against the risk of electrical shock by grounding appropriate metal parts. The extra protection may not function unless the power cord is connected to a properly grounded outlet. It is the user's responsibility to assure a proper ground connection is provided.

Never connect the OUTLET/SUPPLY or INLET/RETURN fitting to your building water supply or any water pressure source.

Never use flammable or corrosive fluids with this unit. Distilled and deionized water may be aggressive and cause material corrosion. Please contact NESLAB before subjecting this unit to prolonged exposure to distilled or deionized water.

Do not use automobile anti-freeze. Commercial anti-freeze contains silicates that can damage the pump seals. Use of automobile anti-freeze will void the manufacturer’s warranty.

Do not replace reservoir plug with a non-vented type or damage to the tank may occur.

For personal safety and equipment reliability, the following procedure should only be performed by a competent technician. Contact our Service Department for assistance (see Preface, After-sale Support).

Additional Warnings

In addition to the specific warnings listed on the previous page the following general warnings apply to you unit:

Performance of installation, operation, or maintenance procedures other than those described in this manual may result in a hazardous situation and may void the manufacturer's warranty.

Transport the unit with care. Sudden jolts or drops can damage the refrigeration lines.

Observe all warning labels.

Never remove warning labels.

Never operate damaged or leaking equipment.

Never operate the unit without cooling fluid in the reservoir.

Always turn off the unit and disconnect the power cord from the power source before performing any service or maintenance procedures, or before moving the unit.

Always empty the reservoir before moving the unit.

Never operate equipment with damaged power cords.

Refer service and repairs to a qualified technician.

Section II General Information

Description

The CFT Recirculating Chiller is designed to provide a continuous supply of cooling fluid at a constant temperature and volume.

The unit consists of an air-cooled refrigeration system, a sealable reservoir, recirculating pump, and a temperature controller.

Throughout the manual, you will be asked to consult the unit's serial number label or the pump identification label for specific information. Both labels are located on the rear of the unit.

Specifications

	CFT-25	CFT-33	CFT-75	CFT-150	CFT-300
Cooling Capacity[1]					
60Hz	580 Watts	950 Watts	2100 Watts	4500Watts	10650 Watts
50Hz	475 Watts	1000 Watts	1900 Watts	3735 Watts	9000 Watts
Temperature Range	+5°C to +30°C			+5°C to +35°C	
Temperature Stability[2,3]					
Analog Temperature Controller	±1.0°C				
Digital Temperature Controller	±0.5°				±1.0°
Reservoir Volume					
Gallons	0.5	1.1	1.8	5.6	
Liters	1.9	4.1	6.8	21.3	
Refrigerant	R134a			R22	

1. Circulating water at 20°C, at 20°C ambient. Cooling capacity will vary depending on fluid temperature, ambient temperature, and cooling fluid. A PD-1 pump was used in the CFT-25, a PD-2 in the other units.
2. Stability determined for CFT-150 analog unit with 75% heat load @ 20°C circulating temperature.
3. CFT-300 stabliity determined with 86% heat load.

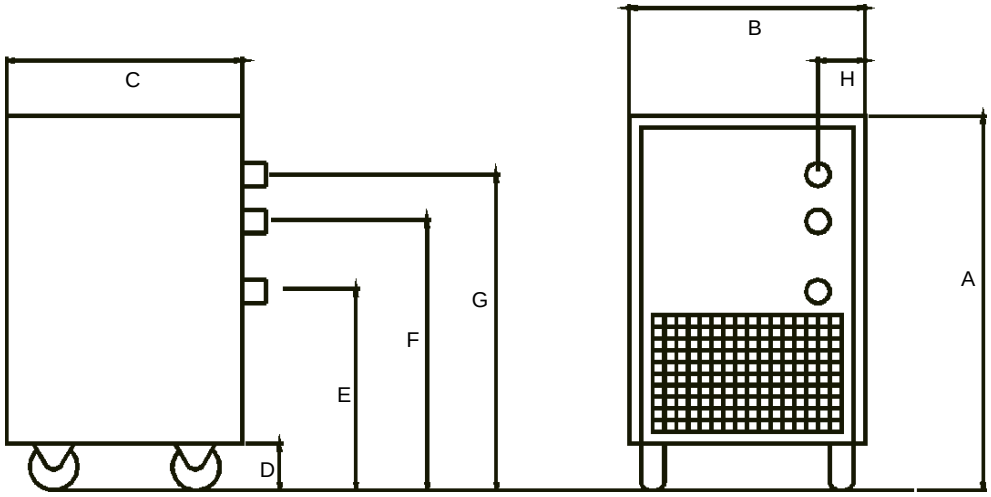

	CFT25	CFT33	CFT75	CFT150	CFT300
Unit Dimensions *Dimension A*	**22**	**24½**	**26½**	**36¾**	**43**
Dimension B	**12½**	**14¾**	**14 7/8**	**21 3/8**	**25½**
Dimension C	**21**	**22**	**24½**	**27¾**	**28½**
Dimension D	**2¾**	**2½**	**2½**	**3½**	**2¾**
Dimension E	**NA**	**NA**	**NA**	**NA**	**29**
Dimension F	**17 1/16**	**18½**	**22**	**32¼**	**38¼**
Dimension G	**20 1/16**	**21½**	**25**	**35¼**	**41¼**
Dimension H	**1½**	**1**	**1 1/8**	**1 1/8**	**1**
Crate Dimensions (H x W x D	**31x23x28**	**31x23x32**	**32x23x40**	**33x29x42**	**35x33x56**
Shipping Weight	**110**	**161**	**181**	**320**	**450**
Air Intake	**280**	**375**	**800**	**1050**	**2500**
Electrical Requirements *Volts*	**115V**	**115V**	**208/230V**	**208/2300V**	**208/230V**
Hertz	**60Hz**	**60Hz**	**60Hz**	**60Hz**	**60Hz**
Phase	**1**	**1**	**1**	**1**	**3**
Plug	**NEMA5-15P**	**NEMA5-20P**	**NEMAL6-15P**	**NEMAL6-20P**	**NA**

1. Dimension A is the height of the unit. The unit width and depth (dimensions B and C) are the case dimensions. Add approximately 2 inches to include the plumbing connections.
2. Dimension D is the distance from the floor to the bottom of the unit case (height of the castors).
3. Dimension E is the distance from the floor to the center of the DRAIN connection (CFT-300 only).
4. Dimension F is the distance from the floor of the center of the OUTLET connection.
5. Dimension G is the distance from the floor of the center of the INLET connection.
6. Dimension H is the distance from the unit's left side to the center of the INLET, OUTLET and DRAIN connections.
7. Weights are given in pounds
8. Air intake is given in cubic feet per minute.

Rev 01/30/97

Pump Capacity[1]

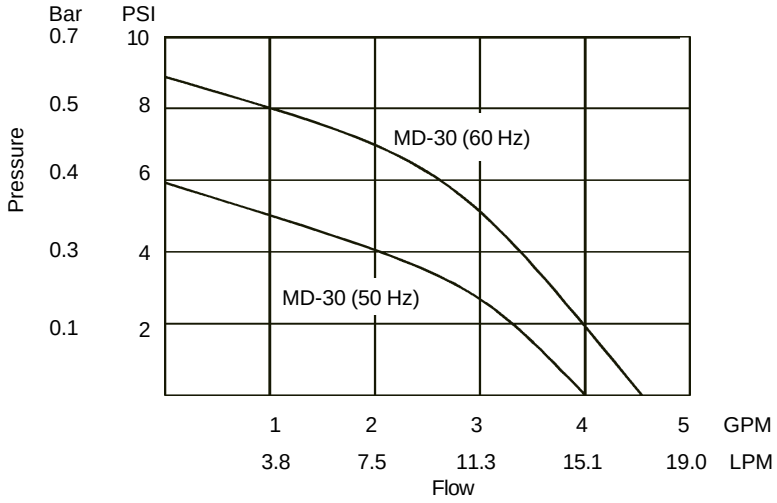

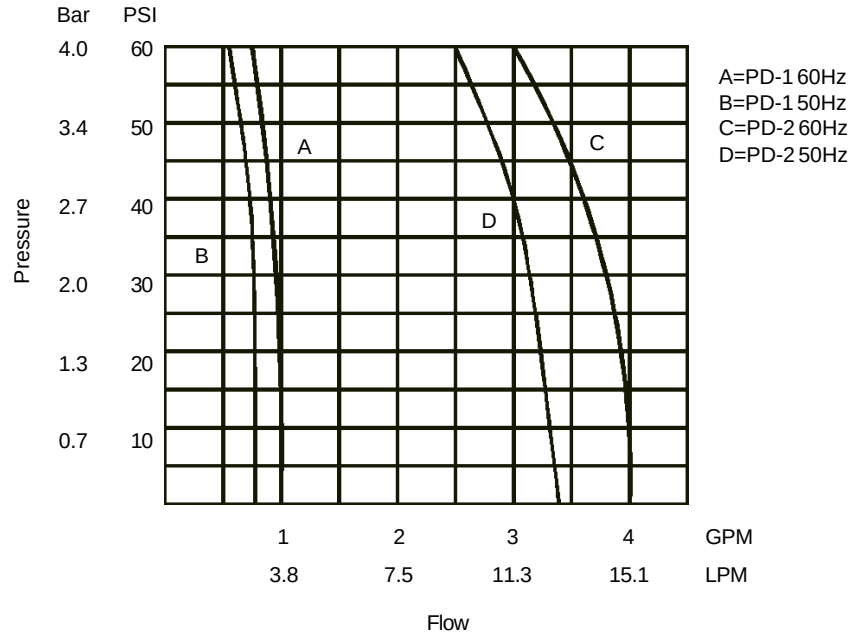

1. To determine which pump is installed, refer to the label on the rear of your unit.

Section III Installation

Site

The unit should be located in a laboratory or clean industrial environment where ambient temperatures are inside the range of +13°C to +35°C.

Never place the unit in a location where excessive heat, moisture, or corrosive materials are present.

The unit has an air-cooled refrigeration system. Air is drawn through the front of the unit and discharged through rear and side panels. The unit must be positioned so the intake and discharge are not impeded. A minimum clearance of 18 inches (45 centimeters) on all vented sides is necessary for adequate ventilation. Inadequate ventilation will cause a reduction in cooling capacity and, in extreme cases, compressor failure.

Excessively dusty areas should be avoided and a periodic cleaning schedule should be instituted (see Section V, Cleaning).

The unit will retain its full rated capacity in ambient temperatures up to approximately +24°C. Above +24°C, derate the cooling capacity 1% for every 0.5°C above +24°C, up to a maximum ambient temperature of +35°C.

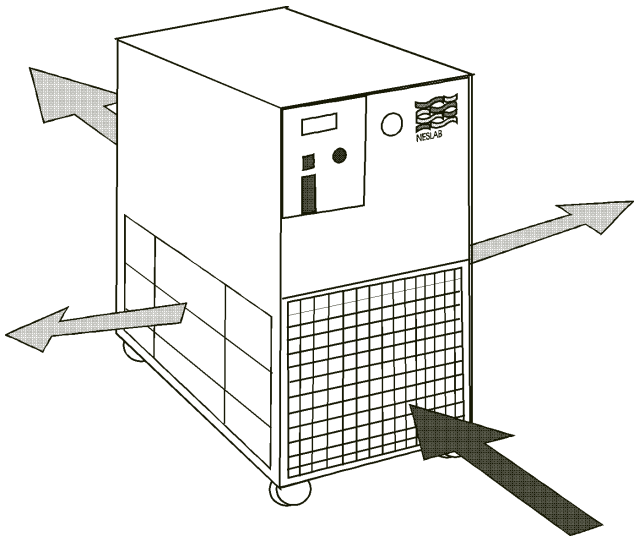

Direction of Air Flow

Electrical Requirements

The unit construction provides extra protection against the risk of electrical shock by grounding appropriate metal parts. The extra protection may not function unless the power cord is connected to a properly grounded outlet. It is the user's responsibility to assure a proper ground connection is provided.

Refer to Section II, Specifications, and to the serial number label on the rear of the unit for the specific electrical requirements of your unit.

The CFT-300 is supplied with a disconnect box. Wire the power connections in accordance to local, state and federal electrical codes. Double check all wiring to make sure it is properly connected and protected from the elements.

The CFT-300 is also equipped with a compressor crankcase heater. The crankcase heater warms the oil in the compressor and prevents refrigerant from mixing with the oil. Before start up, the unit must be connected to its power source for at least 12 hours. This allows time for the oil to be heated and separate from the refrigerant.

Plumbing Requirements

Before installing the unit to an instrument that previously used tap water as a cooling fluid, flush the instrument several times to remove any rust or scale that has built up. The manufacturer of the instrument should be able to recommend a cleaning fluid for their equipment.

The plumbing connections are located on the rear of the unit and are labelled OUTLET/SUPPLY and INLET/RETURN. CFT-25 to CFT-150 connections are ½ inch FPT, CFT-150s with CP-55 pumps are ¾ inch and CFT-300 connections are ¾ inch FPT.

Remove the plastic protective plugs from both plumbing connections.

Connect the OUTLET/SUPPLY fitting to the inlet of the instrument being cooled. Connect the INLET/RETURN fitting to the outlet of the instrument being cooled.

Never connect the fittings to your building water supply or any water pressure source.

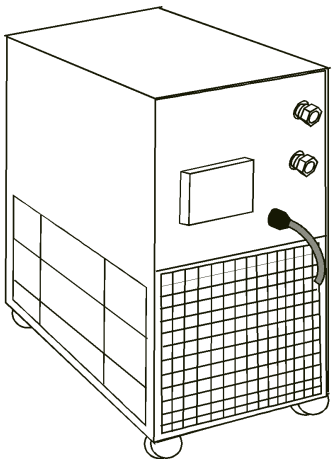

Plumbing Connections (Typical)

Two sets of plumbing adapters are included with CFT-25 to CFT-150 units. One set of adapters will accept 3/8 inch ID tubing. The other set will accept ½ inch ID tubing. If the unit is being plumbed using flexible tubing, install one set of adapters in the plumbing ports. To prevent leaking, be sure to wrap the threads of the adapters with Teflon® sealing tape before installing them in the plumbing ports.

Flexible tubing, if used, should be of heavy wall or reinforced construction. All tubing should be rated to withstand 80 psig at +30°C. Make sure all tubing connections are securely clamped. Avoid running tubing near radiators, hot water pipes, etc. If substantial lengths of tubing are necessary, insulation may be required to prevent loss of cooling capacity.

Tubing and insulation are available from NESLAB. Contact our Sales Department for more information (see Preface, After-sale Support).

It is important to keep the distance between the unit and the instrument being cooled as short as possible, and to use the largest diameter tubing practical. Tubing should be straight and without bends. If diameter reductions must be made, they should be made at the inlet and outlet of the instrument being cooled, not at the CFT.

If substantial lengths of cooling lines are required, they should be pre-filled with cooling fluid before connecting them to the unit.

Fluids

The selected fluid must have a viscosity of 50 centistokes or less at the lowest operating temperature.



Never use flammable or corrosive fluids with this unit. Distilled and deionized water may be aggressive and cause material corrosion. Please contact NESLAB before subjecting this unit to prolonged exposure to distilled or deionized water.

Tap water is the recommended fluid for operation from +8°C to +30°C. See Water Quality Standards and Recommendations on the next page.

Below +8°C, a non-freezing fluid must be used. A mixture of tap water and laboratory grade ethylene glycol is suggested.



Do not use automobile anti-freeze. Commercial anti-freeze contains silicates that can damage the pump seals. Use of automobile anti-freeze will void the manufacturer's warranty.

Water Quality Standards and Recommendations

	Permissible(PPM)	Desirable(PPM)
Microbiologicals (algae,bacteria,fungi)	0	0
Inorganic Chemicals		
Calcium	<40	0.6
Chloride	250	<25
Copper	1.3	1.0
Iron	0.3	<0.1
Lead	0.015	0
Magnesium	<12	0.1
Manganese	0.05	<0.03
Nitrates\Nitrites	10 as N	0
Potassium	<20	0.3
Silicate	25	<1.0
Sodium	<20	0.3
Sulfate	250	<50
Hardness	17	<0.05
Total Dissolved Solids	50	10
Other Parameters		
pH	6.5-8.5	7-8
Resistivity	0.01*	0.05-0.1*
* Megohm-Cm (Compensated at 25C)		

Unfavorably high total ionized solids (TIS) can accelerate the rate of galvanic corrosion. These contaminants can function as electrolytes which increase the potential for galvanic cell corrosion and lead to localized corrosion such as pitting which can be observed at the studs and on the outside surface of cooling coils. Eventually, the pitting will become so extensive that the coil will leak refrigerant into the water reservoir.

As an example, raw water in the United States averages 171 ppm (as NaCl). The recommended level for use in a water system is between 0.5 to 5.0 ppm (as NaCl).

Recommendation: Initially fill the tank with distilled/deionized water. Do not use untreated tap water as the total ionized solids level may be too high.

Maintain this water quality at a resistivity of between 1 to 10 megohm-cm (compensated at 25°C) by using a purification system. Although the initial fill may be as high as 10 megohm-cm (compensated at 25°C), the desired level for long time usage is 1 to 3 megohm-cm (compensated at 25°C).

The above two recommendations will reduce the electrolytic potential of the water and prevent or reduce the galvanic corrosion observed.

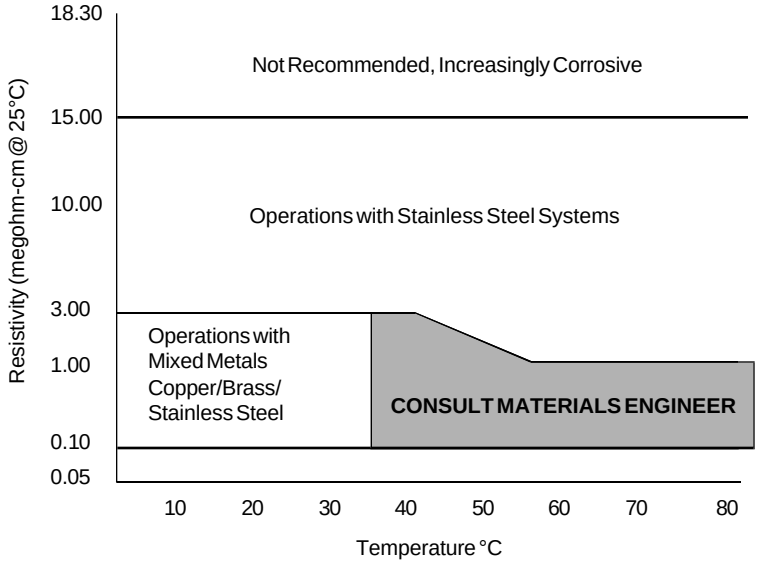

Water Quality Considerations

Filling Requirements

Remove the reservoir access panel by unscrewing the thumbscrews. Locate the reservoir plug (square nut). Remove the plug and fill the reservoir with clean cooling fluid, following the special considerations outlined in the following paragraphs.

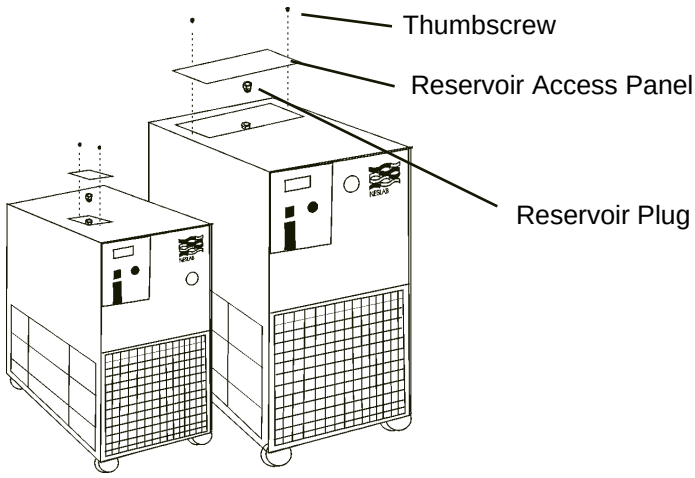

Reservoir filling locations (Typical)

NOTE: The CFT-300 has a FILL lamp which illuminates whenever the reservoir level is below normal operating level.

Circulating to a closed system (closed to the atmosphere)
Fill the reservoir to the bottom of the fill hole threads. Since the reservoir capacity is small compared to many instruments being cooled, have extra cooling fluid on hand to keep the system topped off when external circulation is started.

NOTE: The tank in your unit has a vent which relieves pressure built up from thermal expansion of water. The vent is located on the reservoir plug. It activates when tank pressure reaches 3 - 5 psi.

Do not replace reservoir plug with an non-vented type or damage to the tank may occur.

Circulating to an open system (open to the atmosphere)
Fill the reservoir so ¾ of the fill hole threads are covered. Wrap the tank plug with Teflon® sealing tape. Replace the tank plug and tighten securely to prevent air entry.

When circulating cooling fluid to an open vessel or tank, connect the OUTLET/SUPPLY and INLET/RETURN lines to the open tank. Secure the INLET/RETURN (suction) line below the fluid surface. The INLET/RETURN line should be submerged deep enough to avoid sucking air. Make sure the INLET/RETURN line is free of particles and debris that can block the flow of fluid. A baffle or screen may be required.

Section IV Operation

Start Up

Before starting the unit, double check all electrical and plumbing connections and make sure the circulating system (the CFT, the instrument being cooled, and the tubing that connects them) has been properly filled with cooling fluid. To start the unit, place the POWER Switch to the on (**I**) position. The refrigeration system and the recirculation pump will start. The POWER Switch illuminates (except for the CFT-150) to indicate the system is operating. Units with PD pumps display the pump operating pressure on the RECIRCULATING PRESSURE gauge.

To turn the unit off, place the POWER Switch to the off (**0**) position.

The Cool LED on the front panel indicate the status of the refrigeration system. It illuminates to indicate the refrigeration system is removing heat from the cooling fluid. As the operating temperature approaches the temperature setpoint, the LED will extinguish.

The Idle LED on the front panel of CFT-150 units indicates the unit is in a hot-gas-bypass mode of operation. As the operating temperature approaches the temperature setpoint, the Cool and Idle LEDs cycle to indicate the approximate duty cycle of the unit.

When the unit is shut off, wait approximately five minutes before restarting. This allows time for the refrigeration pressures to equalize. If the pressures are not allowed to equalize, the compressor will short-cycle (clicking sound) and no cooling will occur.

Analog Temperature Controller

Temperature Adjustment

To adjust the temperature setpoint, turn the calibrated °C dial on the front of the unit to the desired temperature.

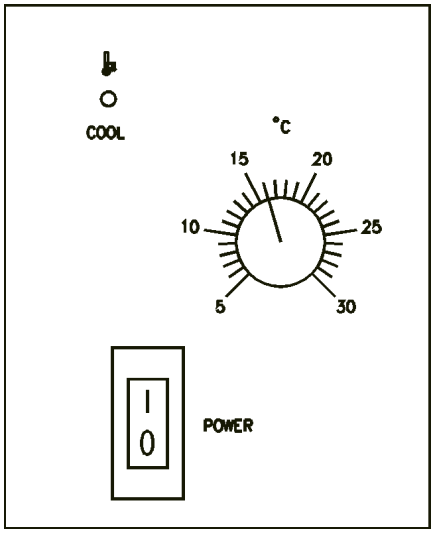

Analog Temperature Controller (Typical)

Digital Temperature Controller

Temperature Adjustment

To display the temperature setpoint, press and hold the DISPLAY switch. To adjust the temperature setpoint, press and hold the DISPLAY switch and turn the ADJUST knob until the desired temperature setpoint is indicated on the digital display. Once the setpoint is adjusted, release the DISPLAY switch. The display will now indicate the temperature of the fluid in the reservoir.

NOTE: Inadvertent movement of the ADJUST knob, regardless of the position of the DISPLAY switch, will result in a change in the setpoint. This change will not be immediately reflected on the digital display, unless the DISPLAY switch is pressed. The digital display will eventually change as the unit reacts to the new setpoint.

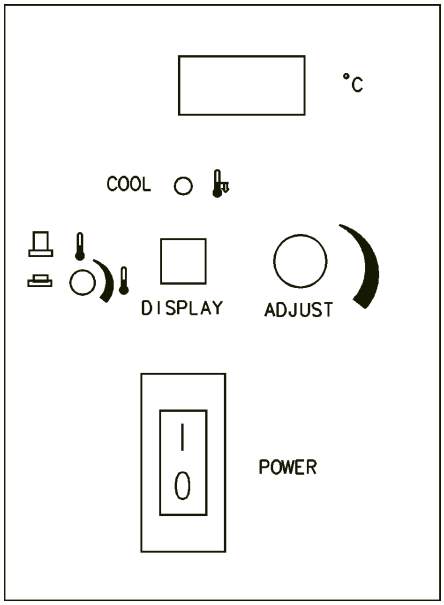

Digital Temperature Controller (Typical)

Pressure Relief Valve

Units with PD pumps have a pressure relief valve which establishes the maximum operating pressure of the unit. If the pressure of the fluid leaving the pump exceeds the valve setting, the relief valve will bypass the fluid within the unit to relieve the pressure. The relief valve does not determine the actual operating pressure; the operating pressure is determined by the back pressure of the system.

If an adjustment is necessary, contact our Customer Service Department.

High Temperature Cutout (Optional)

The High Temperature Cutout (HTC) is designed to shut down the unit in the event the temperature of the fluid in the reservoir exceeds the HTC setting. The HTC is normally located on the rear of the unit.

NOTE: The HTC temperature scale is in °F.

CFT-300 High/Low Pressure Cutout

CFT-300 units are equipped with high and low refrigeration pressure cutouts. Should either cutout activate the unit will shut down.

The High Pressure Cutout (HPC) activates if there is a blockage in the refrigeration lines or if the refrigerant temperature becomes too hot. The HPC is factory preset at 400psi.

The Low Pressure Cutout (LPC) activates if there is a leak in the refrigeration lines. THE LPC is factory preset at 4psi.

Both cutouts are located inside the case behind the rear panel. Once the cause of the shut down has been determined and corrected, manually depress the white button on the applicable cutout. If a "click" is not heard when depressing the button, the cutout was not activated and the unit shut down for another reason.

CFT-150 High Pressure Cutout

Some CFT-150 units are equipped with High Pressure Cutouts (HPC). Should the HPC activate the unit will shut down.

The HPC activates if there is a blockage in the refrigeration lines or if the refrigerant temperature becomes too hot. The HPC is factory preset at 400psi.

The cutout is located inside the case behind the rear panel. Once the cause of the shut down has been determined and corrected, manually depress the white button on the applicable cutout. If a "click" is not heard when depressing the button, the cutout was not activated and the unit shut down for another reason.

Heater Package (Optional)

Heaters are controlled by a switch on the temperature controller. The heater itself is accessible through the small service panel on the rear of the unit.

These units also have a Low Level indicator. The indicator illuminates if the fluid level in the reservoir drops below proper operating level.

Illustration A shows the desired fluid level for normal operation.

Should the reservoir be filled as shown in illustration B, units designed to operate at high-end temperatures (near boiling) may cause air in the reservoir to become trapped. The air can be vented by slightly tilting the unit forward on its front castors.

Any fluid venting from the reservoir will drain through a hose which feeds to a small hole in the bottom of the unit.

Do not used silicon-based fluids with units designed to operate at high temperatures. These type fluids will damage the hoses and pump seal.

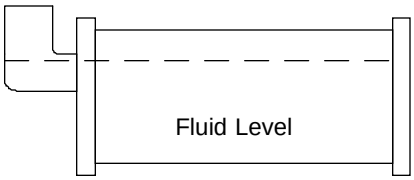

Illustration A

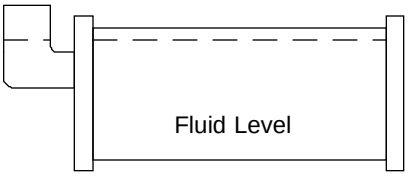

Illustration B

External Pressure Regulator (Optional)

For applications requiring a maximum pressure less than 55 PSI (380 kPa), an External Pressure Reducer (EPR) is available. An EPR allows an adjustable operating pressure of 10 to 50 PSI (70 to 345 kPa). If the pressure of the fluid leaving the chiller exceeds the relief valve setting, the relief valve will bypass excess fluid back into the chiller to relieve the overpressure.

The pressure of the system is determined by the back pressure of the connected equipment and the flow rate of the recirculating fluid to your application. Connect the EPR as described.

NOTE: Install the fittings in the exact sequence shown.

NOTE: Use Teflon® tape on all threaded fittings.

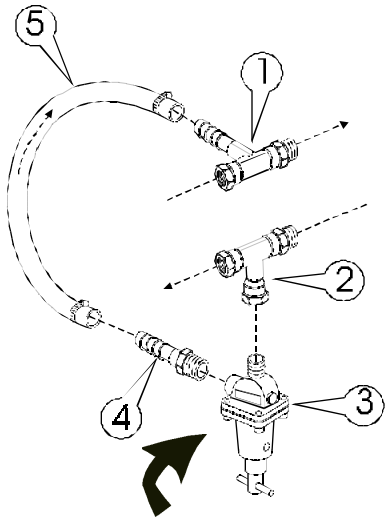

Connect the Inlet Tee Assembly (1) to the chiller. Connect the Outlet Tee Assembly (2) to the chiller. Attach the relief valve (3) to the Outlet Tee Assembly (2). Attach the Hose Nipple (4) to the Relief Valve (3). Attach the Hose (5) between the Inlet Tee Assembly (1) and the Hose Nipple (4).

The EPR is now installed. Connect the inlet (to your application) to the remaining fitting of the Outlet Tee Assembly (2). Connect the outlet (from your application) to the remaining fitting of the Inlet Tee Assembly (1).

Tighten the hose clamps tight enough to prevent leakage. Do not overtighten or the clamps will bite into the flexible tubing and cause excessive wear. If a torque wrench is available, torque hose clamps to 50 in/lbs (280 cm/kg). Nylon-reinforced hose tends to cold-flow, so the clamps will need to retorqued later. (The hose clamps do not actually loosen, but rather the hose outside diameter decreases!).

The "T" adjustment handle is equipped with a locknut. To adjust the relief pressure setting loosen the locknut and turn the "T" handle to the minimum pressure setting (direction of arrow).

To simulate blockage, close (or pinch off) the hose between the EPR outlet tee assembly and the instrument being cooled. Monitor the operating pressure of the unit. Turn the "T" handle until the desired relief pressure is set. (The EPR valve cannot be set lower than the total back pressure of the instrument being cooled or the instrument will not receive any flow.)

Tighten the locknut to secure the position of the "T" handle. Open the hose between the EPR outlet tee assembly and the instrument being cooled.

Section V Maintenance and Service



For personal safety and equipment reliability, the following procedure should only be performed by a competent technician. Contact our Service Department for assistance (see Preface, After-sale Support).

Service Contracts

NESLAB offers on-site Service Contracts that are designed to provide extended life and minimal down-time for your unit. For more information, contact our Service Department (see Preface, After-sale Support).

Draining the Reservoir

The CFT-300 is equipped with a ½ inch FPT DRAIN fitting located on the rear of the unit.

To drain the CFT-25 to CFT-150 reservoirs we recommend the use of a wet/dry vacuum. Remove the reservoir plug and carefully insert the wet/dry vacuum so as not to damage the cooling coils. **NOTE:** Tilting the unit more than 45° may allow compressor oil to seep into the suction line.

Cleaning

Reservoir

Periodically inspect the fluid inside the reservoir. If cleaning is necessary, flush the reservoir with a cleaning fluid compatible with the circulating system and the cooling fluid.

The cooling fluid should be replaced periodically. When operating at low temperatures, the concentration of water in the cooling fluid will increase over time, leading to a loss of cooling capacity.

Before changing the cooling fluid, raise the operating temperature of the unit to de-ice the cooling coils. Refer to Section III, Filling Requirements for instructions on replacing the cooling fluid.

Condenser

For proper operation, the unit needs to pull substantial amounts of air through a condenser. A build up of dust or debris on the fins of the condenser will lead to a loss of cooling capacity.

The lower front of the unit has a one-piece grille assembly. Gently pry the assembly off with a flathead screwdriver. Use care not to scratch the paint.

Periodic vacuuming of the condenser fins is necessary. The frequency of cleaning depends on the operating environment. We recommend a visual inspection of the condenser be made monthly after initial installation. After several months, the frequency of cleaning will be established.

Algae

To restrict the growth of algae in the reservoir, it is recommended that the reservoir cover be kept in place and that all circulation lines be opaque. This will eliminate the entrance of light which is required for the growth of most common algae.

NESLAB recommends the use of Chloramine-T, one gram per gallon.

Pump Strainer

Units with PD pumps have a strainer. Refer to the pump label on the rear of the unit to identify the type of pump in your unit.

If debris is in the system, the strainer will prevent the material from being drawn into the pump and damaging the pump vanes.

After initial installation, the strainer may become clogged with debris and scale. Therefore, the strainer must be cleaned after the first week of installation. After this first cleaning, a monthly visual inspection is recommended. After several months, the frequency of cleaning will be established.

Before cleaning the strainer, disconnect the power cord from the power source and drain the reservoir.

PD-1 pumps have a wire mesh strainer located in the pump head. PD-2 pumps have the strainer located in the pump suction line.

Remove the wrapper from the unit. Unscrew the larger of the two acorn nuts on the pump head and remove the screen.

Clean the screen by rinsing it with water.

When the screen is clean, replace it in the strainer, tighten the acorn nut and replace the wrapper. Refer to Section III, Filling Requirements for instructions on replacing the cooling fluid.

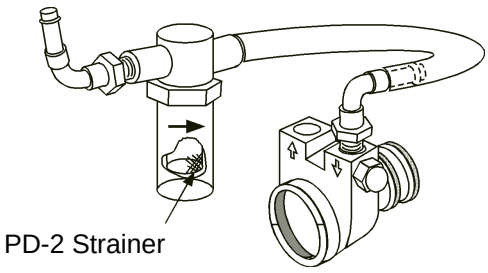

PD-2 Strainer

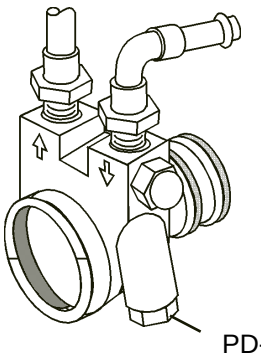

PD-1 Strainer

Pump Motor Lubrication

PD pump motors require periodic lubrication. Refer to the pump label on the rear of the unit to identify the type of pump in your unit.

PD pumps use sleeve type bearings with large reservoirs. Oiling instructions are generally posted on each motor. In the absence of instructions, add approximately 30 to 35 drops of SAE 20 non-detergent oil to each bearing on the following schedule (SAE 20 = 142 CS viscosity):

Duty Cycle	Oiling Frequency
Continuous	Once every year
Intermittent	Once every 2 years
Occasional	Once every 5 years

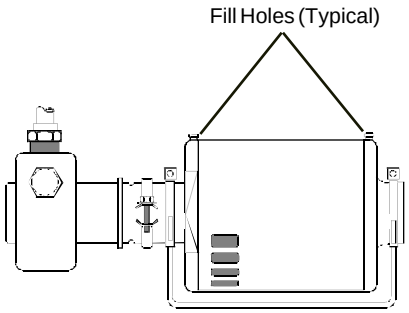

Hoses

The unit's internal and external hoses and clamps should be inspected and tightened on at least a semiannual basis.

Suction Discharge Pressure Speed Check

Unit	Pump	Refrigerant	Suction PSIG	Discharge PSIG	Speed °C/Min
CFT-25	PD-1	R134a	36 -38	160 - 170	4.8
CFT-25	MD-30	R134a	25 - 28	145 -160	4.0
CFT-33	PD1/2	R134a	42 - 45	180 - 200	3.0
CFT-75	PD1/2	R134a	37 - 41	170 -185	4.6
CFT-150	PD2	R22	70	270	2.8
CFT-300	PD2	R22	88 - 94	265 - 280	6.8
CFT-300	CP-55	R22	85 - 90	268 - 280	6.8

Standard temperature 60 Hertz units, derate 17% for 50 Hertz Units. +20°C fluid temperature, unit in the COOL mode, +20°C ambient. 100% water in the reservoir. Wrapper removed.

Section VI Troubleshooting

Checklist

Unit will not start

Check the line cord, make sure it is plugged in.

Check the voltage of the power source. Make sure it is within the rated voltage of the unit, ±10%.

Check that the Power Switch/Circuit Breaker has not tripped.

Check the setting on the optional High Temperature Cutout.

CFT-300 units are equipped with high and low pressure switches. If either switch activates the unit will shut down. Once the cause has been determined you have to manually reset the switch. The switches are located behind the rear panel. (See Section IV, Operation on page 17.)

Unit will not circulate fluid

Check the reservoir level. Fill, if necessary.

Make sure the pump has been purged.

Check the pressure gauge (units with PD pumps). If the reading is 60 psig, check the instrument being cooled for restrictions in the cooling line.

Check the pump strainer (units with PD pumps). A clogged strainer can starve the pump.

Inadequate temperature control

If the temperature continues to rise, make sure the heat load of the instrument being cooled does not exceed the rated specification. (See Section II, Specifications on page 6.)

Make sure the air intake and discharge are not impeded and the ambient temperature does not exceed +35°C.

Make sure the condenser is free of dust and debris. (See Section VI, Cleaning on page 20.)

If the compressor short-cycles (a clicking sound), check the line voltage. It should be within the 10% of the specified voltage. Wait 5 minutes before restarting the unit.

Service Assistance

If, after following these troubleshooting steps, your unit fails to operate properly, contact our Service Department for assistance (see Preface, After-sale Support). Before calling, please refer to the serial number label on the rear of the unit to obtain the following information:

- *unit BOM number*
- *unit serial number*
- *voltage of unit*
- *voltage of power source*

Pump Flow Diagram

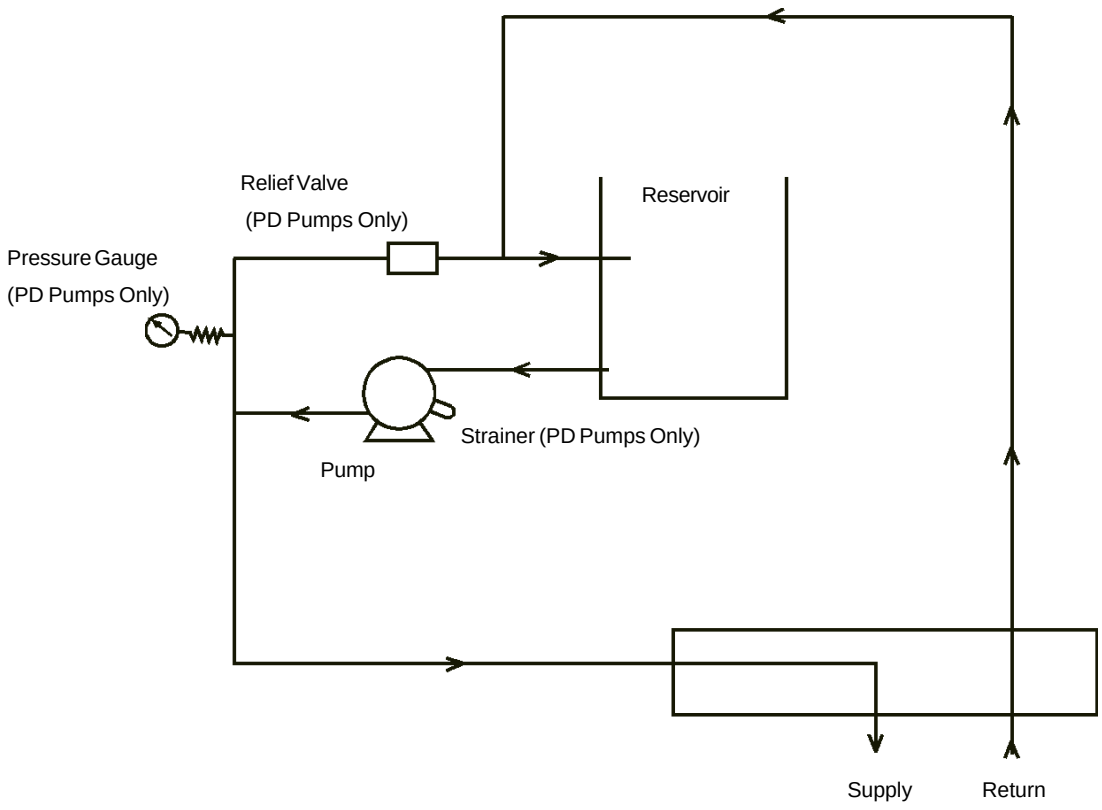

WARRANTY

NESLAB Instruments, Inc. warrants for 12 months from date of shipment any NESLAB unit according to the following terms.

Any part of the unit manufactured or supplied by NESLAB and found in the reasonable judgment of NESLAB to be defective in material or workmanship will be repaired at an authorized NESLAB Repair Depot without charge for parts or labor. The unit, including any defective part must be returned to an authorized NESLAB Repair Depot within the warranty period. The expense of returning the unit to the authorized NESLAB Repair Depot for warranty service will be paid for by the buyer. NESLAB's responsibility in respect to warranty claims is limited to performing the required repairs or replacements, and no claim of breach of warranty shall be cause for cancellation or recision of the contract of sales of any unit.

With respect to units that qualify for field service repairs, NESLAB's responsibility is limited to the component parts necessary for the repair and the labor that is required on site to perform the repair. Any travel labor or mileage charges are the financial responsibility of the buyer.

The buyer shall be responsible for any evaluation or warranty service call (including labor charges) if no defects are found with the NESLAB product.

This warranty does not cover any unit that has been subject to misuse, neglect, or accident. This warranty does not apply to any damage to the unit that is the result of improper installation or maintenance, or to any unit that has been operated or maintained in any way contrary to the operating or maintenance instructions specified in NESLAB's Instruction and Operation Manual. This warranty does not cover any unit that has been altered or modified so as to change its intended use.

In addition, this warranty does not extend to repairs made by the use of parts, accessories, or fluids which are either incompatible with the unit or adversely affect its operation, performance, or durability.

NESLAB reserves the right to change or improve the design of any unit without assuming any obligation to modify any unit previously manufactured.

THE FOREGOING EXPRESS WARRANTY IS IN LIEU OF ALL OTHER WARRANTIES, EXPRESSED OR IMPLIED, INCLUDING BUT NOT LIMITED TO WARRANTIES OR MERCHANTABILITY AND FITNESS FOR A PARTICULAR PURPOSE.

NESLAB'S OBLIGATION UNDER THIS WARRANTY IS STRICTLY AND EXCLUSIVELY LIMITED TO THE REPAIR OR REPLACEMENT OF DEFECTIVE COMPONENT PARTS AND NESLAB DOES NOT ASSUME OR AUTHORIZE ANYONE TO ASSUME FOR IT ANY OTHER OBLIGATION.

NESLAB ASSUMES NO RESPONSIBILITY FOR INCIDENTAL, CONSEQUENTIAL, OR OTHER DAMAGES INCLUDING, BUT NOT LIMITED TO LOSS OR DAMAGE TO PROPERTY, LOSS OF PROFITS OR REVENUE, LOSS OF THE UNIT, LOSS OF TIME, OR INCONVENIENCE.

This warranty applies to units sold in the United States. Any units sold elsewhere are warranted by the affiliated marketing company of NESLAB Instruments, Inc. This warranty and all matters arising pursuant to it shall be governed by the law of the State of New Hampshire, United States. All legal actions brought in relation hereto shall be filed in the appropriate state or federal courts in New Hampshire, unless waived by NESLAB.

NESLAB

CFT series

using TC-200 controller

NESLAB Manual P/N U00320
Rev. 22 June 1999

Service manual

NESLAB online
Product Service Information, Electronic Catalog, Applications Notes, MSDS Forms, e-mail.

Call our bulletin board system
(603)427-2490
Contact us for free FirstClass® access software. Specify Macintosh or Windows.

Voice Info: (800) 4-NESLAB

Visit our Web page at:

http://www.neslabinc.com

service resources



NESLAB ONLINE

NESLAB ONLINE is your source for online service data, including service bulletins, manuals, refrigerant charging information, calibration instructions, and more for all catalog units. You can browse the same library our Technical Support representatives use - and this is available 24 hours a day, 7 days a week. Obtain the access software, FirstClass Client, from sources on the next page or from us. Then use it to connect to (603) 427-2490 by modem.

→ ☐ FirstClass Client for Macintosh

→ ☐ FirstClass Client for Windows 3.x '95

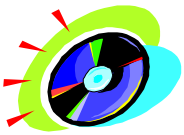

NESLAB OFFLINE

NESLAB OFFLINE is a cd-rom which contains all the content of NESLAB ONLINE as of Jan. 1 1998. This is ideal if you have no modem capability. The cd-rom works on both Macintosh and Windows computers. It also includes FirstClass Client.

→ ☐ NESLAB OFFLINE cd-rom



The EVAPORATOR

The EVAPORATOR is our service newsletter. It contains service bulletins and information of interest to anyone who maintains NESLAB equipment.

→ ☐ subscription to The Evaporator

mail:
NESLAB ONLINE
PO Box 1178
Portsmouth NH 03802-1178

fax: (603) 430-6387

e-mail:
rick.mills@neslabinstruments.com

Name _____

Company _____

Address _____

City _____

State / Province _____

Zip / Postal code _____

e-mail address (optional) _____

	Sources for FirstClass Client for Macintosh	Sources for FirstClass Client for Windows
	**3.5" disk:** Obtain from NESLAB. The Mac client is published on red disks. If you have a CD drive, use one of the CD sources below as they carry a later version. Installation is not required - you can run the application right off the floppy disk.	**3.5" disk:** Obtain from NESLAB. The Windows client is published on blue disks. It works on Windows 3.x or Windows 95. If you have a CD-ROM drive, use the CD-ROM (below) instead as it carries a later version.
	**CD-ROM:** NESLAB OFFLINE 1998 cd-rom cd-rom companion to the magazine: MacAddict, Issue #1, Sep. 1996 go to: Shareware / Connectivity / FirstClass Client. cd-rom companion to the magazine: MacAddict, Issue #13, Sep. 1997 go to: Shareware / Communications / FirstClass Client. cd-rom companion to the book: Macintosh Revelations by Ken Maki go to: Telecom / BBS Software / FirstClass Client. Any cd-rom shareware/software collection from BMUG (Berkeley Mac Users Group)	**CD-ROM:** NESLAB OFFLINE 1998 cd-rom
NESLAB ONLINE Intranet - bbs	**Download from NESLAB ONLINE:** Go to Conferences / Software / Mac	**Download from NESLAB ONLINE:** Go to Conferences / Software / Windows
AMERICA Online	**Download from America Online:** Keyword: SoftArc	**Download from America Online:** Keyword: Softarc
CSi CompuServe	**Download from Compuserve:** TWEUROPA / Teletools / FCMAC.ZIP	**Download from Compuserve:** PCBBS / BBS programs / FCC300.EXE
	**Download from World Wide Web:** http: // www.softarc.com	**Download from World Wide Web:** http: // www.softarc.com

.
.

Contents

Section I: Safety

Warnings 6

Section II: General information

After sale support 7
Other resources 7
Decoding part numbers 8
Interface defined 9
Navigating loops 10
Operator's loop 10
Setup loop 11
Calibration loop 13
Configuration loop 14
Service loop 15
Displaying software version 16

Section III: Service

Troubleshooting 17
Microprocessor replacement 20
Error codes 21

Section IV: Adjustments

Factory defaults 22
Restoring factory defaults 22
Field calibration 23
Hot gas valve 26

Section V: Preventive maintenance

Service contracts 27
Reservoir 27
Cleaning 27
Algae 28
Pump strainer 28
Pump motor lubrication 29
Torque values 29

Section VI: Reference

Refrigerant data 30
MSDS form: R-134a refrigerant 31
MSDS form: R-22 refrigerant 33
Service bulletin U00336: CFT75 - solenoid valve change 38
Service bulletin U00349: CFT33 - check capacitor wiring 39
Year 2000 statement 40

Section I: Safety

Warnings

Make sure you read and understand all instructions and safety precautions listed in this manual before installing or operating your unit. If you have any questions concerning the operation of your unit or the information in this manual, contact our Sales Department (see After-sale Support).

Performance of installation, operation, or maintenance procedures other than those described in this manual may result in a hazardous situation and may void the manufacturer's warranty.

Observe all warning labels. Never remove warning labels.
Never operate damaged or leaking equipment.
Never operate the unit without cooling fluid in the reservoir.
Always turn off the unit and disconnect the power source before performing any service or maintenance procedures, or before moving the unit.
Always empty the reservoir before moving the unit.
Never operate equipment with damaged line cords.
Refer service and repairs to a qualified technician.



In addition to the safety warnings listed above, warnings are posted throughout the manual. These warnings are designated by an exclamation mark inside an equilateral triangle with text highlighted in bold print. Read and follow these important instructions. Failure to observe these instructions can result in permanent damage to the unit, significant property damage, or personal injury or death.



The lightning flash with arrow symbol, within an equilateral triangle, is intended to alert the user to the presence of non-insulated "dangerous voltage" within the unit's enclosure. The voltage may be of significant magnitude to constitute a risk of electrical shock.

Section II: General information

After Sale Support

NESLAB is committed to customer service both during and after the sale. If you have questions concerning the operation of your unit, contact our Sales Department. If your unit fails to operate properly, or if you have questions concerning spare parts or service contracts, contact our Service Department. Before calling, please obtain the following information from the unit's serial number label:
part number
serial number

Other resources

The Instruction and Operation Manual for the CFT series is PN U00362.

Pump systems are covered in a separate service manual.
For MD pumps, obtain service manual 000877.
For PD pumps, obtain service manual 000878.

Decoding part numbers

NESLAB identifies units using a 12-digit part number. To decode the part number, split up the digits as shown in the chart below. This will define what characteristics the unit has.

000	0	00	00	00	00
unit family	condenser	electrical	pump/head	controller	catalog

unit family

128 EX111
129 EX211
130 EX221
131 EX411
132 EX511
134 RTE111
135 RTE211
136 RTE221
137 EX111
138 EX211
139 EX221
140 EX411
141 EX511
157 RTE140
167 RTE111
168 RTE211
169 RTE221
171 RTE140,LT50
331 CFT25A
332 CFT33A
333 CFT75A
334 CFT25, R12
335 CFT33, R12
336 CFT75, R12
337 CFT150,FAC200
347 CFT25, R22
348 CFT33, R22
349 CFT75, R22
386 HX75, R22
387 HX100, R22
388 HX150, R22
389 HX200, R22
390 HX300, R22
391 HX500, R22
392 HX750, R22
393 CFT25, R134a
394 CFT33, R134a
395 CFT75, R134a
396 CFT300,FAC400
397 CFT500
398 CFT750
400 CFT100
607 CFT50
608 CFT75
612 RTE microprocessor
613 CFT200

condenser

0 Not applicable
1 Air cooled
2 Water cooled

electrical

00 None
01 100v / 50Hz / 1ø
02 100v 60Hz (no longer used)
03 115v / 60Hz / 1ø
04 208-230v / 60Hz / 1ø
05 208-230v / 60Hz / 3ø
06 220-240v / 50Hz / 1ø
07 220-240v / 50Hz / 3ø
08 Slave
09 440-480v / 60Hz / 3ø
10 380-415v / 50Hz / 3ø (4 wire)
11 100v / 50-60Hz
12 100-115v / 50-60Hz
13 200v / 50Hz / 1ø
15 200v / 50-60Hz
16 Dual rated:
200v / 50Hz / 1ø
200-230v / 60Hz / 1ø
17 208v / 60Hz / 3ø (5 wire)
20 415v / 50Hz / 3ø
21 380-415v / 50Hz / 3ø (5 wire)
22 200-240v / 50-60Hz /1ø
23 380-480v / 50-60Hz / 3ø (4 wire)
99 Special

pump/head

00 No pump
01 CP25
02 CP55
03 PD1
04 PD2
05 CP75
06 TU1
07 TU5
08 TU6
09 TU7
10 TU8
11 SS PD1
12 SS PD2
15 MD30
16 CP20
17 G1
18 F Pump, 1 Stage
19 F Pump, 2 Stage
20 Z Pump
21 F Immersion head
22 R Immersion head
23 FV Immersion head
24 H Pump
25 Dual PD1
26 Dual PD2
28 was PD3, now unassigned
29 CP100
30 TU9
31 TU3
99 Special

controller

01 Analog
02 Digital, non bath
03 Series II
04 Programmable
05 Basic
06 Cryotrol
07 Digital, bath
08 UL approved
09 UL approved plus interlocks
10 UL approved plus alarm pkg.
11 Microprocessor
12 Digital remote (HX1000, HX2000)
13 Fisher standard digital
14 Controller I (TC100)
15 Controller II (TC200)
16 Controller III (TC300)
17 Controller IV (TC400)

catalog

Once upon a time 00 indicated a standard catalog unit, and 01 and up indicated the presence of customizing options and/or accessories. That distinction is no longer used and these digits have no special significance any more.

Interface defined

This statement defines NESLAB's policy towards access and contents of various control loops for TC200, TC300, and TC400 controller applications. It is provided by the Measurement and Control group.

With an increasing number of controller applications it is important to maintain consistency in the way we code our operator interface. The goal is to minimize the effort to code, build, test, document, use, and service our products.

Unless the customer specification specifically requests a different approach, the operator interface will be programmed in the following manner. Private loops are those requiring a proprietary access code, as described in this manual.

Operator's loop (public): This is the default power-up loop. This loop is for basic display information and the location of the process setpoint adjustment, flow 1, flow 2, resistivity, etc.

Setup/tune loop (public): This loop contains any other adjustments the customer is expected to access. Consider this an advanced user's loop. If the customer is expected to change it, then it goes here. Example: Proportional-integral-derivative (PID) values, alarm setpoints, communication enable and parameters, remote sensor enable, selection of °F or °C display, etc.

Configuration loop (private): This loop is used by NESLAB production to enter any factory settings. These are not intended to be changed after the initial setting. Some designs may not have anything in the Configuration Loop. Example: injector setpoint and settings, high and low span, interlocks or cutouts, 50/60 Hz power selection, etc.

Calibration loop (private): This loop allows the operator to calibrate temperature and other variables to reference instruments.

Service loop (private): This is intended for service personnel to aid in field trouble-shooting. The service loop allows the controller inputs and outputs to be monitored and changed for testing of the electrical control system and components. Each application needs an unique one page service sheet that defines the controller inputs/outputs before the service loop can be used.

Documentation: The operators manual will only contain the operator's loop and setup/tune loop information. The appendix of the operators manual may also contain the calibration loop information. The service manual will contain all the different loops.

Mark Sinclair
Measurement and Control Manager

Navigating the loops

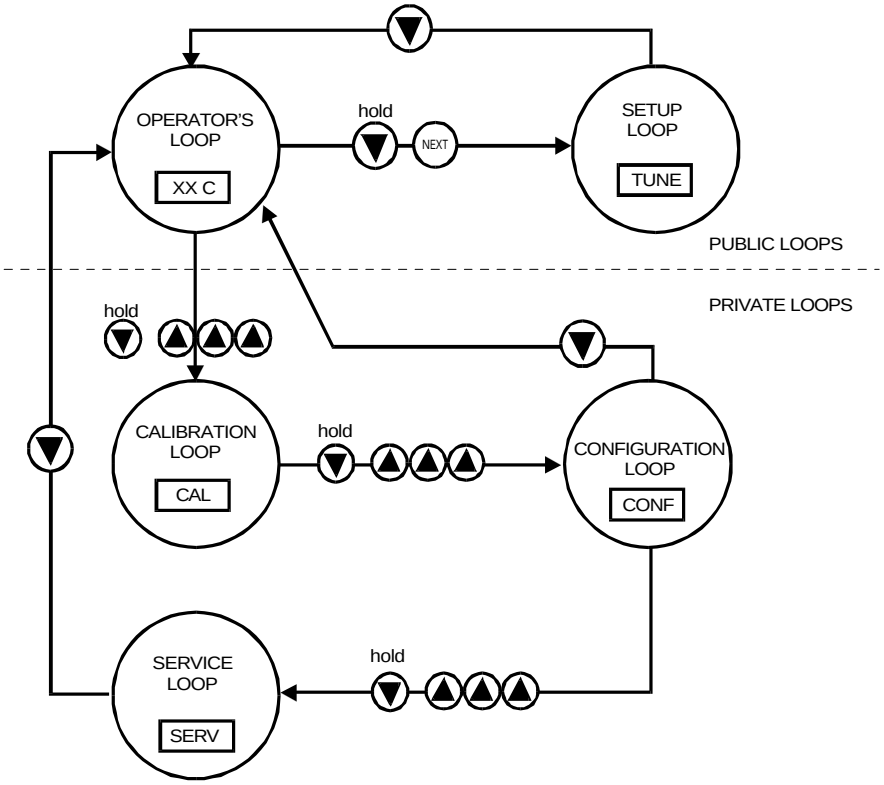

Operator's loop

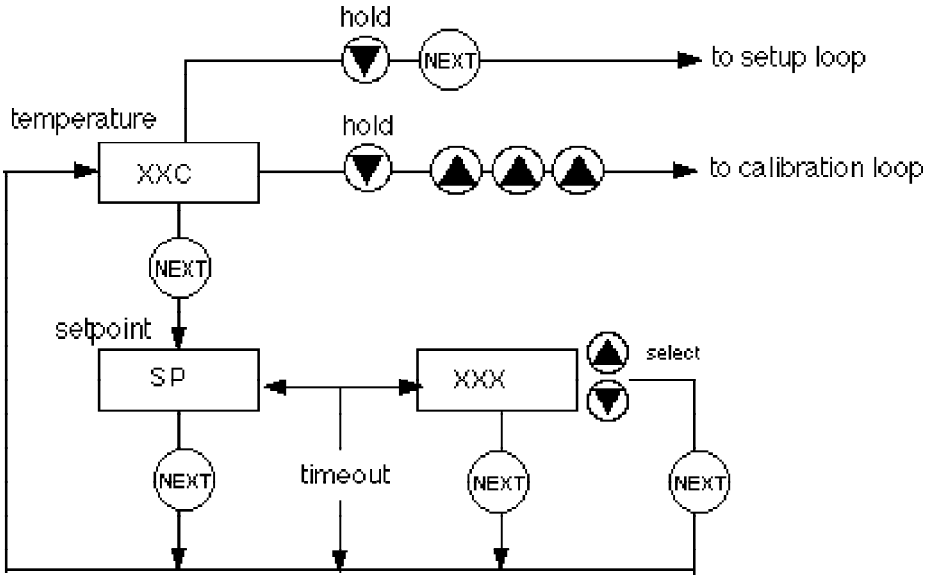

Setup loop - part 1

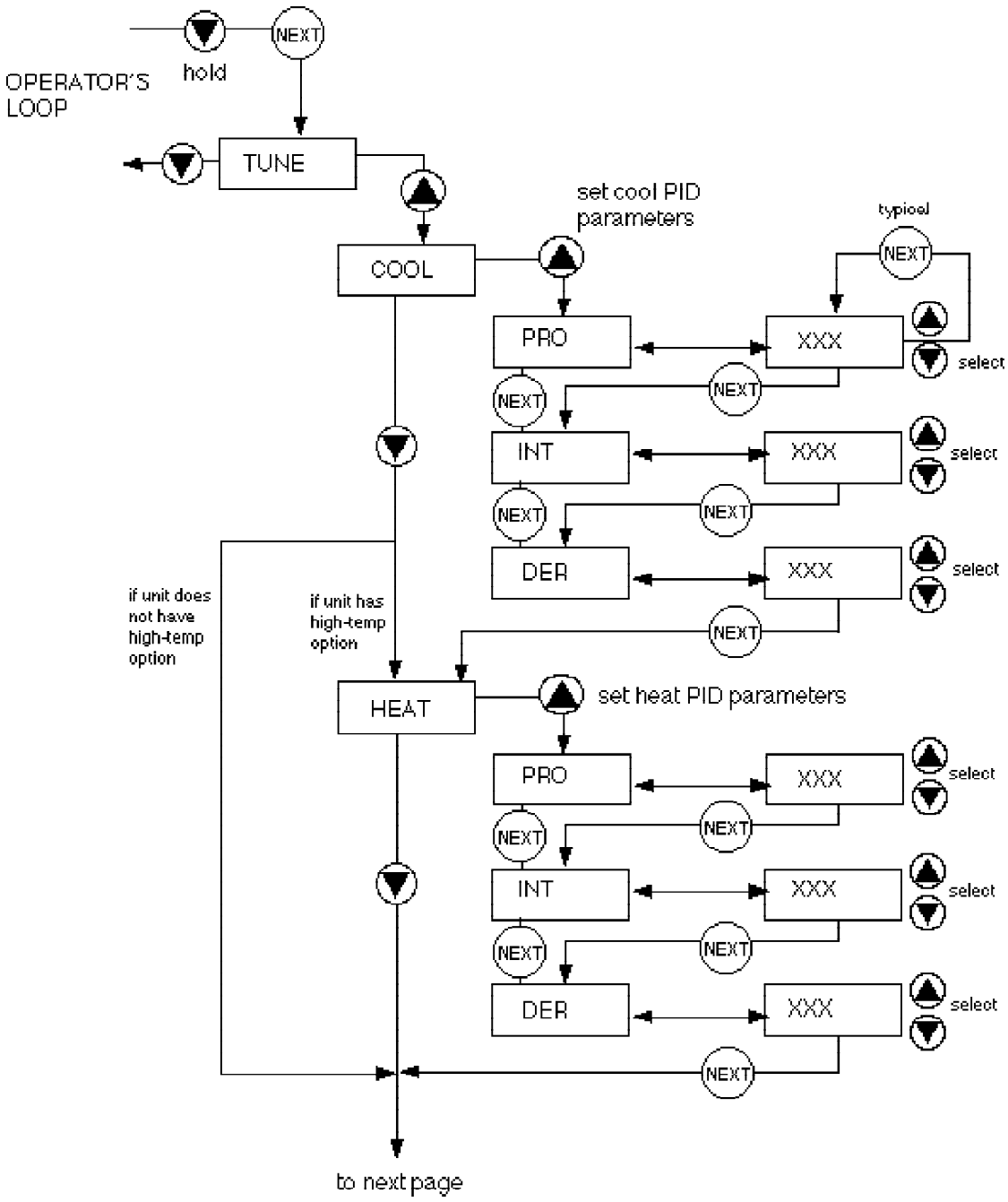

Setup loop - part 2

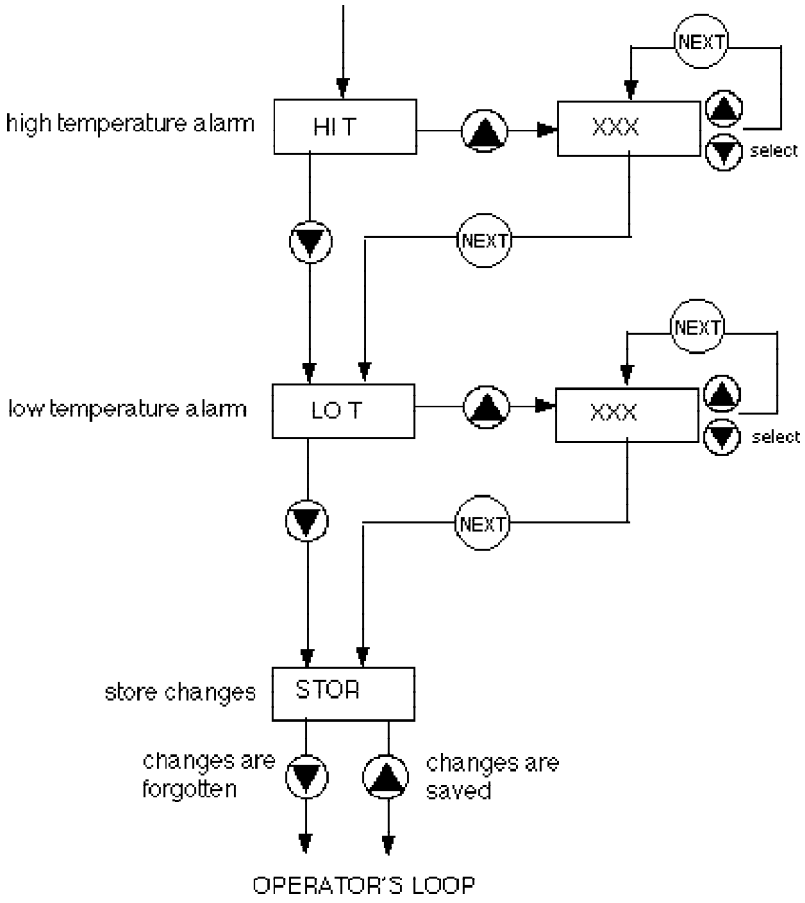

Calibration loop

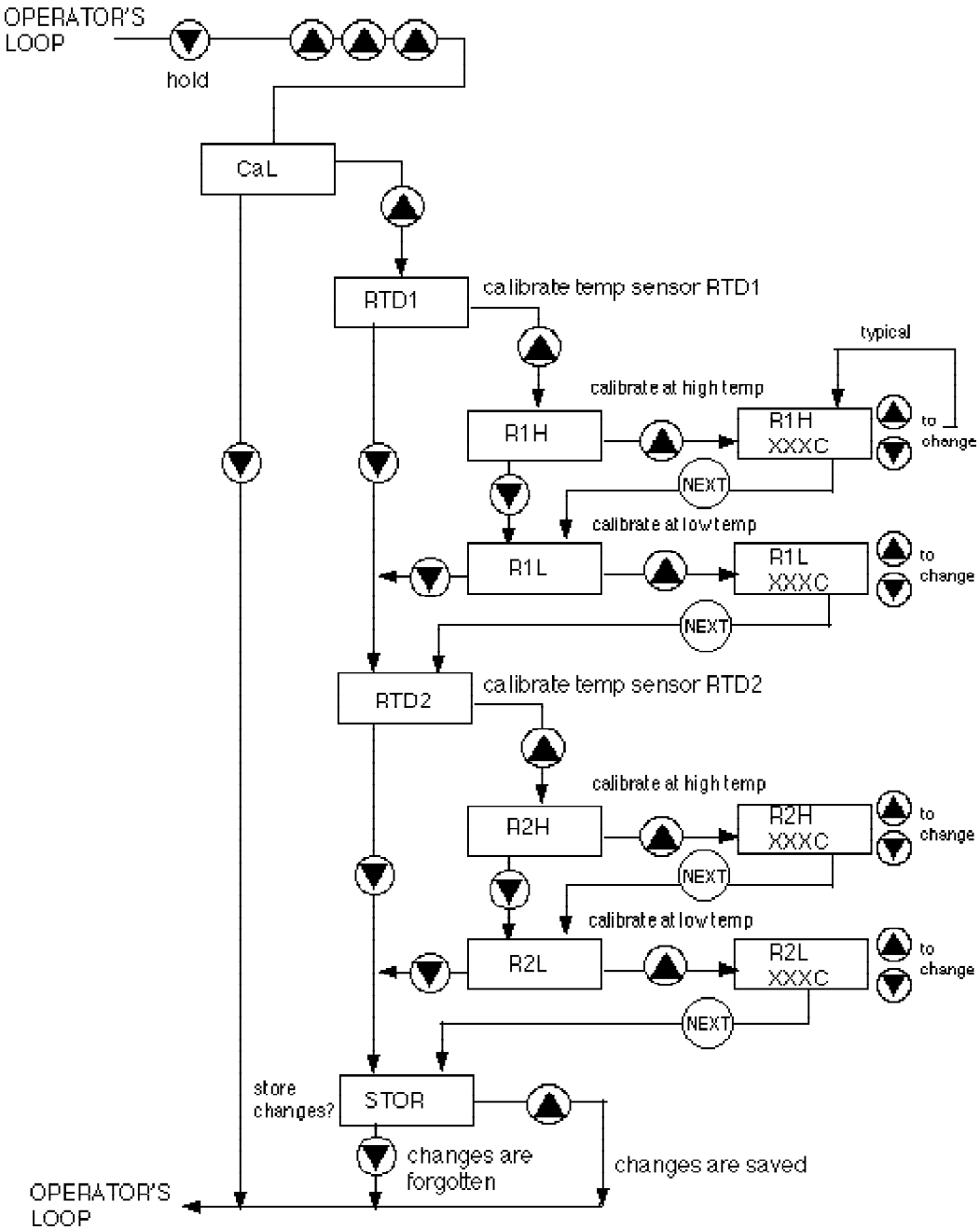

Configuration loop

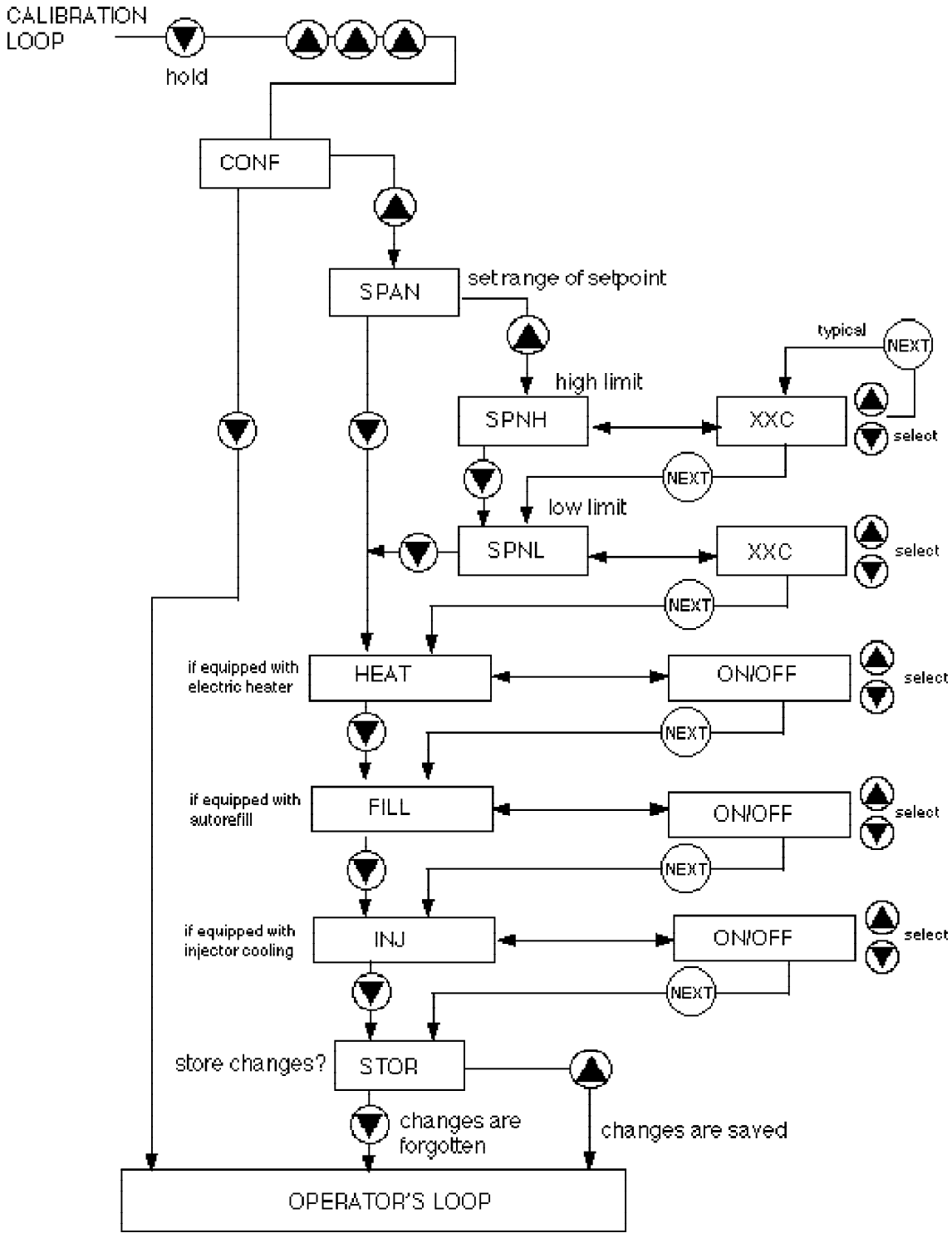

Service loop

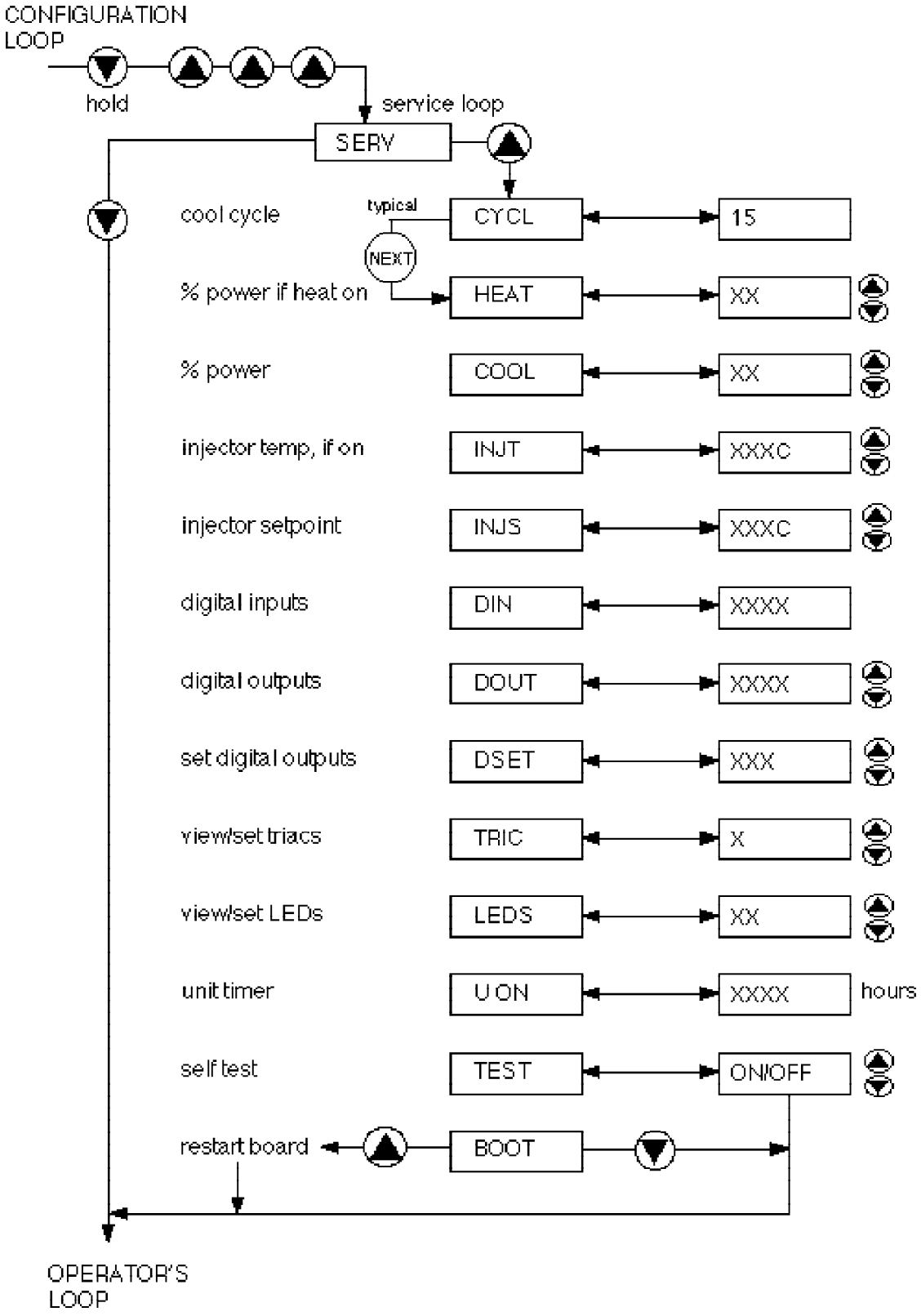

Displaying software version

The TC-200 controller has a function which will show the installed software version number on the unit's digital display.

For example, for a unit with software version **000550.45B**:

1. Unit is running normally and displaying temperature.

2. Press and hold the NO key for at least 10 seconds.
The display will show the digits to the left of the decimal (for example): **0550**
(note the two leading zeros are not shown).

3. Press the NEXT key.
The display will show the digits to the right of the decimal (for example): **45**

4. Press the NEXT key.
The display will show the revision letter, as its equivalent number, with A=1, B=2, etc. (for example): **2**

5. Press the NEXT key.
The digits shown may be disregarded.

6. Press the NEXT key.
The display returns to normal, displaying temperature.

Section III. Service

Troubleshooting

Unit will not start

Check the line cord, make sure it is plugged in.

Check the voltage of the power source. Make sure it is within the rated voltage of the unit, ±10%.

Check that the Power Switch/Circuit Breaker has not tripped.

Check the setting on the optional High Temperature Cutout.

CFT-300 units are equipped with high and low pressure switches. If either switch activates the unit will shut down. Once the cause has been determined you have to manually reset the switch. The switches are located behind the rear panel, see the operation manual.

Unit will not circulate fluid

Check the reservoir level. Fill, if necessary.

Make sure the pump has been purged.

Check the pressure gauge (units with PD pumps). If the reading is 60 psig, check the instrument being cooled for restrictions in the cooling line.

Check the pump strainer (units with PD pumps). A clogged strainer can starve the pump.

Inadequate temperature control

If the temperature continues to rise, make sure the heat load of the instrument being cooled does not exceed the rated specification, see the operating manual for specifications.

Make sure the air intake and discharge are not impeded and the ambient temperature does not exceed +35°C.

Make sure the condenser is free of dust and debris.

If the compressor short-cycles (a clicking sound), check the line voltage. It should be within the 10% of the specified voltage. Wait 5 minutes before restarting the unit.

Symptom	Possible cause	Repair
Compressor will not start - no hum	1. Line disconnect switch open 2. Line fuse (if any) removed or blown 3. Overload protector tripped 4. Wiring improper or loose	1. Close start or disconnect switch 2. Replace fuse 3. Allow compressor to cool 4. Check against wiring diagram
Compressor will not start - hums but trips on overload protector	1. Improperly wired 2. Low line voltage 3. Start capacitor defective 4. Relay failing to close 5. Compressor motor has winding open or shorted 6. Compressor mechanical failure 7. Liquid refrigerant in compressor	1. Check against wiring diagram 2. Determine reason and correct 3. Determine reason and replace 4. Determine reason and correct, replace if necessary 5. Replace compressor 6. Replace compressor 7. Add crankcase heater and/or accumulator
Compressor starts, but does not switch off start winding	1. Improperly wired 2. Low line voltage 3. Relay failing to open 4. Run capacitor defective 5. Excessive discharge pressure 6. Compressor motor has winding open or shorted 7. Compressor mechanical failure	1. Check against wiring diagram 2. Determine reason and correct 3. Determine reason and correct, replace if necessary 4. Determine reason and replace 5. Check discharge shut-off valve, possible overcharge, or insufficient cooling on condenser 6. Replace compressor 7. Replace compressor
Compressor starts and runs, but short cycles on overload protector	1. Additional current passing through overload protector 2. Low line voltage, or unbalanced if three-phase 3. Overload protector defective 4. Run capacitor defective 5. Excessive discharge pressure 6. Suction pressure too high 7. Compressor too hot, return gas hot 8. Compressor motor has a winding shorted	1. Check wiring diagram. Check for added fan motors, pumps, etc., connected to wrong side of protector 2. Determine reason and correct. 3. Check current, replace protector 4. Determine reason and replace 5. Check ventilation, restrictions in recirculating fluid path, restrictions in refrigeration system 6. Check for possibility of misapplication. Use stronger unit 7. Check refrigerant charge (fix leak), add if necessary 8. Replace compressor
Unit runs but continually stops and restarts	1. Overload protector 2. High temperature cutout, if so equipped 3. High pressure cutout due to: a. insufficient air or water supply b. overcharge c. air in system 4. Low pressure cutout due to: a. liquid line solenoid leaking b. compressor valve leak c. undercharge d. restriction in expansion device	1. See entire section above 2. Heat load too high, fluid flow too low 3a. Check air or water supply to condenser 3b. Reduce refrigerant charge 3c. Purge 4a. Replace 4b. Replace 4c. Fix leak, add refrigerant 4d. Replace device

Symptom	Possible cause	Repair
Unit operates long or continuously	1. Shortage of refrigerant 2. Control contacts stuck closed 3. Refrigerated fluid has excessive load or poor insulation 4. System inadequate to handle load 5. Evaporator coil iced 6. Restriction in refrigeration system 7. Dirty condenser 8. Air filter (if any) dirty	1. Fix leak, add charge 2. Clean contacts or replace 3. Determine fault and correct 4. Replace with larger system 5. Defrost 6. Determine location and remove 7. Clean condenser 8. Clean on replace
Start capacitor open, shorted, or blown	1. Relay contacts not operating properly 2. Prolonged operation on start cycle due to: a. low voltage to unit b. improper relay c. starting load too high 3. Excessive short cycling 4. Improper capacitor	1. Clean contacts, replace relay if needed 2a. Determine reason and correct 2b. Replace 2c. Correct 3. Determine reason and correct 4. Determine correct size and replace
Run capacitor open, shorted, or blown	1. Improper capacitor 2. Excessively high line voltage (110% of rated maximum)	1. Determine correct size and replace 2. Determine reason and correct
Relay defective or burned out	1. Incorrect relay 2. Incorrect mounting angle 3. Line voltage too high or too low 4. Excessive short cycling 5. Relay being influenced by loose vibrating mounting 6. Incorrect run capacitor	1. Check and replace 2. Remount relay in correct position 3. Determine reason and correct 4. Determine reason and correct 5. Remount rigidly 6. Replace with proper capacitor
Recirculating fluid temperature too high	1. Control setpoint too high 2. Expansion valve too small 3. Evaporator too small 4. Inadequate air circulation through condenser	1. Reset setpoint. 2. Use larger valve. 3. Add surface area or replace 4. Improve air movement
Suction line frosted or sweating	1. Expansion valve passing excess refrigerant or is oversized 2. Expansion valve stuck open 3. Overcharge of refrigerant	1. Readjust valve or replace with smaller valve 2. Clean valve of foreign particles, replace if necessary 3. Correct charge
Liquid line frosted or sweating	1. Restriction in drier or strainer 2. Liquid shut off (king valve) (if so equipped) partially closed	1. Replace part 2. Open valve fully
Unit noisy	1. Loose parts or mountings 2. Tubing rattle 3. Bent fan blade causing vibration 4. Fan motor bearings worn	1. Find and tighten 2. Reform to be free of contact 3. Replace blade 4. Replace motor

Microprocessor replacement

1. WARNING: Physically disconnect unit from line voltage.

2. Use proper Electro-Static Discharge (ESD) protection procedures. A wrist strap is mandatory, at a minimum. NESLAB is not responsible for replacement of integrated circuits damaged by ESD.

3. A Plastic Leaded Chip Carrier (PLCC) extraction tool is required.

4. Remove wrapper of unit.

5. Remove the cover from the control box. On CFT-25, 33, and 75 there are four screws. On CFT-150 and larger, there are only two screws.

6. CFT-25, 33, and 75 only: The control box assembly must be pulled outside the case to allow access room. Remove the two nuts that hold the control box assembly to the case. Tip the control box assembly out of the hole in the case. Remove the secondary cover (the one with all the strain reliefs mounted to it).

Note: On CFT-150 and larger, there is adequate access room. The control box assembly may remain mounted to the case.

7. Observe the pin orientation of the old microprocessor chip. Remove it using the PLCC extraction tool. Install the new microprocessor chip, making sure the pin 1 designation on the microprocessor chip (a dimple in the middle of one side) and the socket (generally a triangle pointer on the socket or the circuit board) align. DO NOT USE THE ORIENTATION OF THE PAPER LABEL FOR ALIGNMENT. THE PAPER LABEL ORIENTATION IS ARBITRARY.

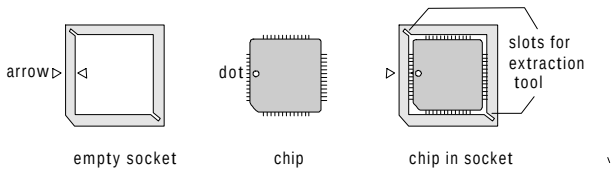

8. Reassemble the unit and all covers.

9. Plug unit in and turn it on. Error messages will appear. Press ENTER/NEXT after each error message until the temperature display appears.

10. The unit is now operational, but calibration has been lost. Calibrate unit per instructions in this manual.

Error codes

On power up:

These messages will be displayed on the controller. The controller will wait for someone to press the next/enter key. Once the “next/enter” key is pressed the controller will restore factory defaults and begin to run. For example if “Err1” is on the controller display at power up, this indicates the internal ram is messed up.

Er01 - Ram test failure
Er02 - Keypad failure, shorted keypad
Er03 - Critical checksum failure, will restore all factory defaults.
Er04- Non-Critical checksum failure, will restore 1/2 of factory values, keeps calibration, PID, restore setpoint

Unusual Hardware Conditions

These errors will flash on the display and cannot be cleared. These are internal controller problems.

Er04 thru Er15 - Interrupt errors during runtime

Functional/ Machine errors

These are the runtime/ logic errors these errors will clear themselves once the problem disappears.

Er16 - Bad calibration data - recalibrate controller
Er19 - Low temperature alarm
Er21 - High temperature alarm
Er22 - High tank temperature
Er23 - Shorted RTD2
Er24 - Open RTD2
Er25 - Shorted RTD1
Er26 - Open RTD1
Er31 - Low level fault
ADD - Low level alarm

Section IV. Adjustments

Factory defaults

Cool PID values:	Pro	20	Int	0.5	Der	0
Heat PID values:	Pro	5	Int	0.5	Der	0

Alarms

Hi temp	90
Lo temp	-20

Span

CFT25/33/75 standard temp	Lo limit 5	Hi limit 30
CFT25/33/75 high temp	Lo limit 5	Hi limit 85
CFT25/33/75 low temp	Lo limit -15	Hi limit 30
CFT150/300 standard temp	Lo limit 5	Hi limit 35
CFT150/300 high temp	Lo limit 5	Hi limit 85
CFT150/300 low temp	Lo limit -15	Hi limit 35

Cool cycle 15

Restoring factory defaults

This procedure will restore all controller values to the factory default settings (which vary by product).

1. Begin in the Operator's loop, displaying temperature as normal.

2. Hold NO, and while holding it, press YES, YES, YES. This should result in the Calibration Loop, with the display indicating "CaL".

3. Hold NO, and while holding it, press YES, YES, YES. This should result in the Configuration Loop, with the display indicating "ConF".

4. Hold NO, and then press and hold NEXT/ENTER for seven seconds minimum. This should result in the display indicating "reSt" (meaning RESTORE).

5. Press YES. The controller will restore the factory default settings and return to the Operator's Loop.

Field calibration



The unit is calibrated at the factory. Changing any values will nullify temperature indications. The calibration loop should only be used by qualified factory or service personnel. Improper calibration can affect product temperature measurements.

Requirements

Temperature calibration is performed at two different temperatures.
Calibration will be valid at and between those temperatures.
The unit must run at both of these temperatures in turn to be calibrated.

A reference thermometer is required.

Choosing calibration points

Decide what two temperatures you wish to use as calibration points. The temperatures chosen must be within the operating range of the unit (5° - 30°C), achievable, and measurable using a reference thermometer. Calibration will be most valid when the two points are as separated as possible, i.e. 5°C and 30°C. If the unit is only operated at one temperature (for example, 22°C), you may wish to optimize calibration at that point by choosing closer calibration points; such as 20° and 24°C.

Procedure - overview

The general procedure consists of:

1. From operator’s loop, adjust setpoint to lower calibration point
2. Allow unit to achieve the lower calibration point.
3. Go to calibration loop, enter the reference thermometer value.
4. Go to operator’s loop, adjust setpoint to higher calibration point
5. Allow unit to achieve the higher calibration point.
6. Go to calibration loop, enter the reference thermometer value.

Note: The calibration points are independent.
The higher point may be set first if more convenient.

The step-by-step procedure follows.

Begin in the Operator's Loop

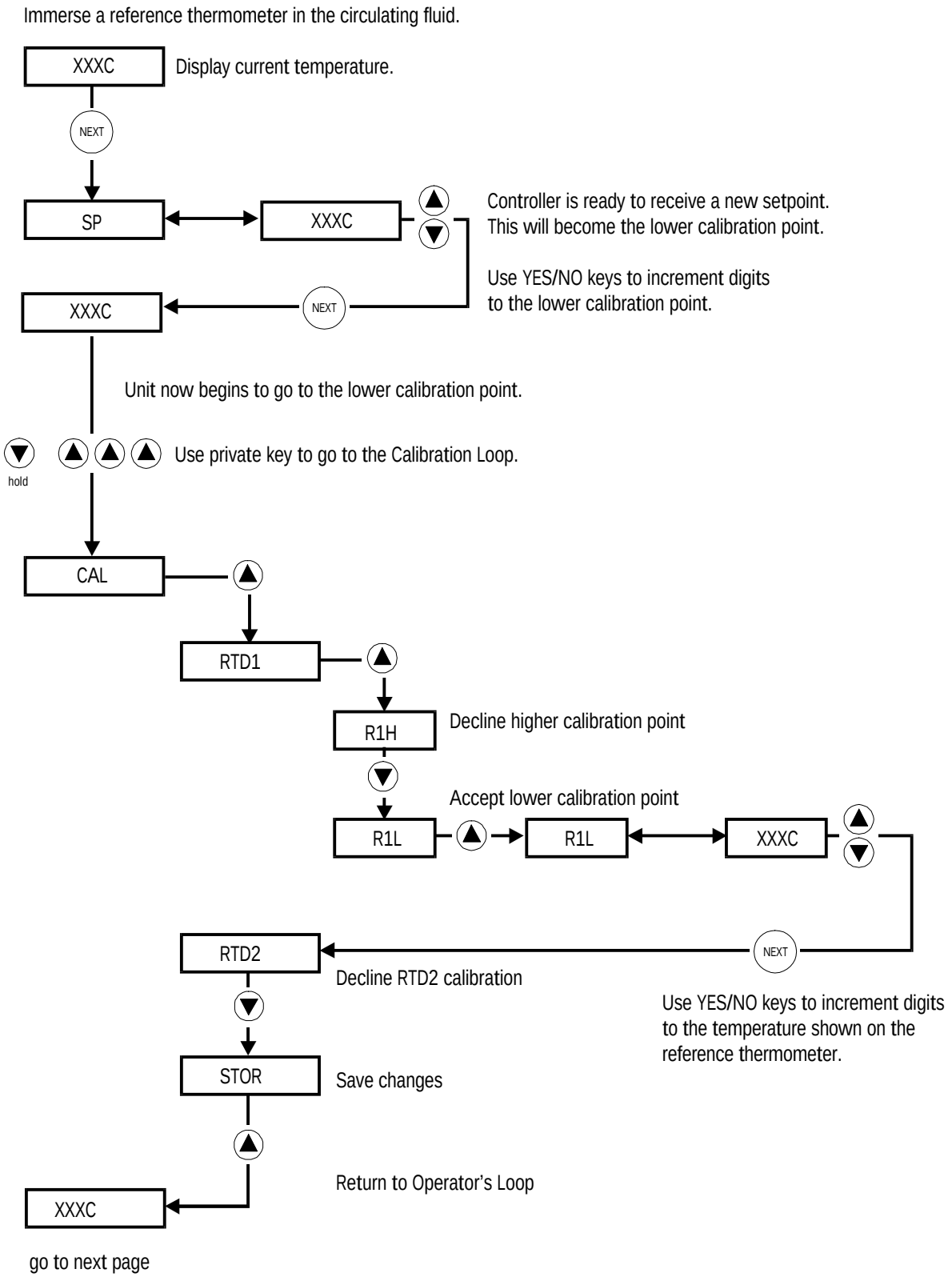

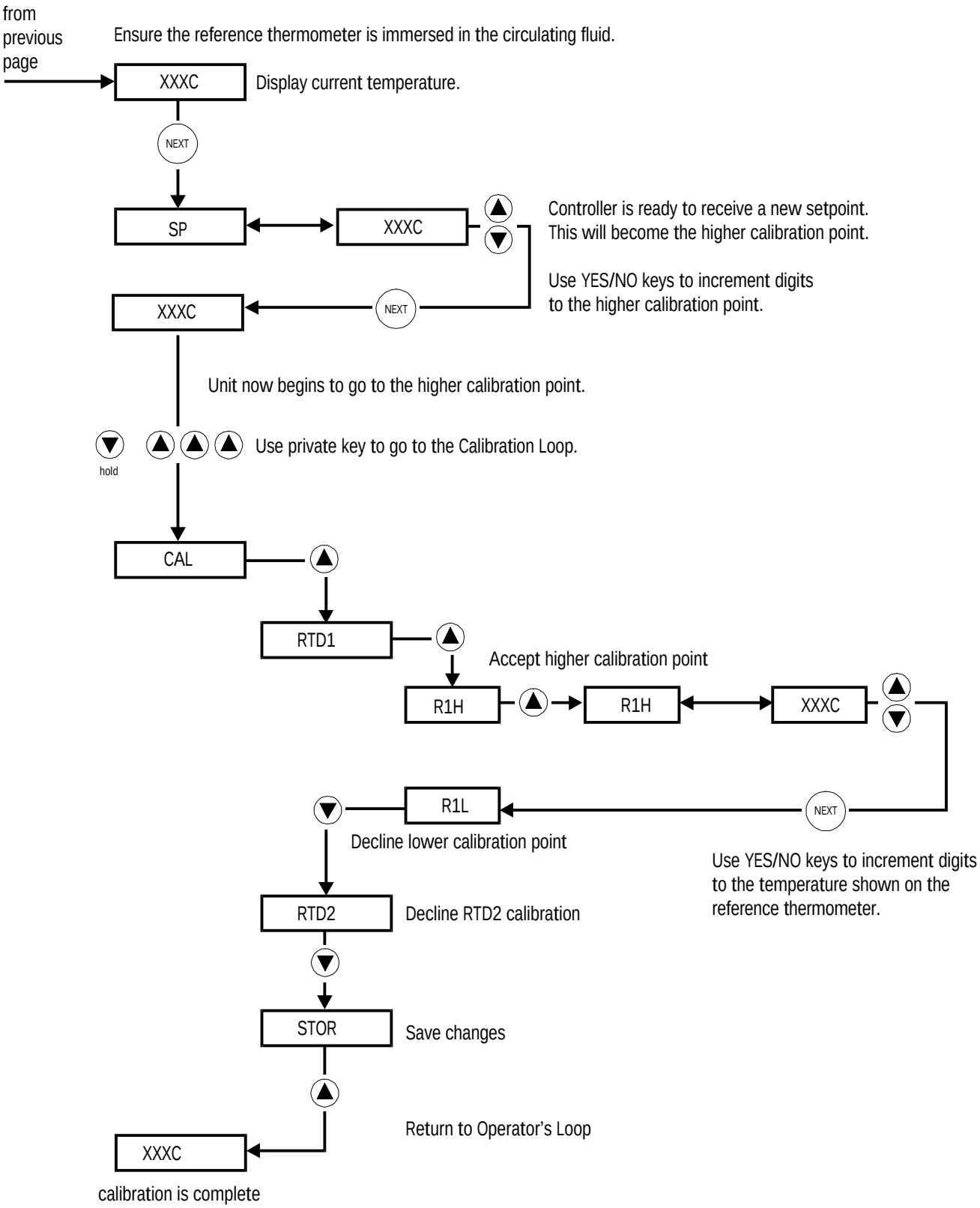
from previous page
Ensure the reference thermometer is immersed in the circulating fluid.
XXXC
Display current temperature.
NEXT
SP
XXXC
Controller is ready to receive a new setpoint.
This will become the higher calibration point.
Use YES/NO keys to increment digits to the higher calibration point.
XXXC
NEXT
Unit now begins to go to the higher calibration point.
hold
Use private key to go to the Calibration Loop.
CAL
RTD1
Accept higher calibration point
R1H
R1H
XXXC
R1L
NEXT
Decline lower calibration point
Use YES/NO keys to increment digits to the temperature shown on the reference thermometer.
RTD2
Decline RTD2 calibration
STOR
Save changes
Return to Operator's Loop
XXXC
calibration is complete

Hot gas valve

The hot gas valve is adjusted as follows.



WARNING: Disconnect unit from line voltage.

1. Attach refrigerant gauges and verify that the refrigerant charge is approximately correct.
2. Start unit and allow it to stabilize.
3. Turn unit setpoint up so unit remains in the heat/idle cycle.
4. Observe suction pressure gauge.
5. Compare reading of gauge to that in the refrigerant data table.
6. Adjust valve, if necessary, to comform to the table.
7. Turn unit off.



WARNING: Disconnect unit from line voltage.

8. Remove refrigerant gauges.

Section V. Preventive maintenance

For personal safety and equipment reliability, the following procedure should only be performed by a qualified technician. Contact our Service Department for assistance (see After-sale Support).

Service contracts

NESLAB offers on-site Service Contracts that are designed to provide extended life and minimal down-time for your unit. For more information, contact our Service Department (see After-sale Support).

Draining the reservoir

The CFT-300 is equipped with a ½ inch FPT DRAIN fitting located on the rear of the unit.

To drain the CFT-25 to CFT-150 reservoirs we recommend the use of a wet/dry vacuum. Remove the reservoir plug and carefully insert the wet/dry vacuum so as not to damage the cooling coils. **NOTE:** Tilting the unit more than 45° may allow compressor oil to seep into the suction line.

Cleaning

Reservoir

Periodically inspect the fluid inside the reservoir. If cleaning is necessary, flush the reservoir with a cleaning fluid compatible with the circulating system and the cooling fluid.

The cooling fluid should be replaced periodically. When operating at low temperatures, the concentration of water in the cooling fluid will increase over time, leading to a loss of cooling capacity.

Before changing the cooling fluid, raise the operating temperature of the unit to de-ice the cooling coils. Refer to the operating manual for instructions on replacing the cooling fluid.

Condenser

For proper operation, the unit needs to pull substantial amounts of air through a condenser. A build up of dust or debris on the fins of the condenser will lead to a loss of cooling capacity.

The lower front of the unit has a one-piece grille assembly. Gently pry the assembly off with a flathead screwdriver. Use care not to scratch the paint.

Periodic vacuuming of the condenser fins is necessary. The frequency of cleaning depends on the operating environment. We recommend a visual inspection of the condenser be made monthly after initial installation. After several months, the frequency of cleaning will be established.

Algae

To restrict the growth of algae in the reservoir, it is recommended that the reservoir cover be kept in place and that all circulation lines be opaque. This will eliminate the entrance of light which is required for the growth of most common algae.

NESLAB recommends the use of Chloramine-T, 1 gram per 3.5 liters.

Pump strainer

Units with PD pumps have a strainer. Refer to the pump label on the rear of the unit to identify the type of pump in your unit.

If debris is in the system, the strainer will prevent the material from being drawn into the pump and damaging the pump vanes.

After initial installation, the strainer may become clogged with debris and scale. Therefore, the strainer must be cleaned after the first week of installation. After this first cleaning, a monthly visual inspection is recommended. After several months, the frequency of cleaning will be established.

Before cleaning the strainer, disconnect the power cord from the power source and drain the reservoir.

PD-1 pumps have a wire mesh strainer located in the pump head. PD-2 pumps have the strainer located in the pump suction line.

Remove the wrapper from the unit. Unscrew the larger of the two acorn nuts on the pump head and remove the screen.

Clean the screen by rinsing it with water.

When the screen is clean, replace it in the strainer, tighten the acorn nut and replace the wrapper. Refer to the operating manual for instructions on replacing the cooling fluid.

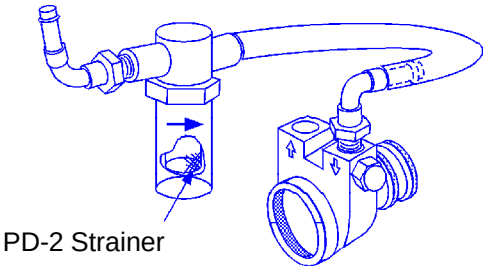

PD-2 Strainer

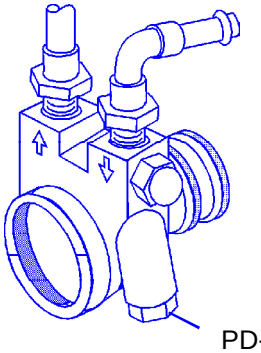

PD-1 Strainer

Pump motor lubrication

PD pump motors require periodic lubrication. Refer to the pump label on the rear of the unit to identify the type of pump in your unit.

PD pumps use sleeve type bearings with large reservoirs. Oiling instructions are generally posted on each motor. In the absence of instructions, add approximately 30 to 35 drops of SAE 20 non-detergent oil to each bearing on the following schedule (SAE 20 = 142 CS viscosity):

Duty Cycle	Oiling Frequency
Continuous	Once every year
Intermittent	Once every 2 years
Occasional	Once every 5 years

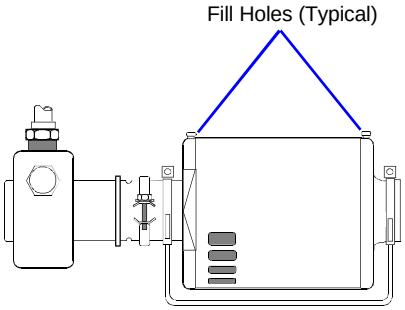

Torque

V-band clamp

The V-band clamp (which joins the pump to the motor) should be tightened to **15 - 30 inch-pounds** (85 - 170 cm/kg) of torque.

Hose clamps

The unit's internal and external hoses and clamps should be inspected and tightened on at least a semiannual basis. If the unit uses standard clear reinforced hose (with the reinforcement webbing visible in the wall of the hose), tighten hose clamps to **50 in/lbs** (280 cm/kg).

Note that this type hose will cold-flow, so the clamps will need to retorqued later after the hose conforms to the clamps. (Be aware the hose clamps do not actually loosen, but rather the hose O.D. decreases under them!)

It is best to give them a final torqueing just prior to leaving the job site. It is wise to explain to the customer that a further torqueing may be required the following day - and that a drip developing at the hose clamp is a result of this cold-flow and not poor workmanship.

Section VI. Reference

refrigerant data

Model	CFT-25	CFT-33	CFT-75	CFT-150	CFT-300	CFT-300
Pump	any	any	any	any	CP55,TU5,TU6	PD2
Refrigerant	R-134a	R-134a	R-134a	R-22	R-22	R22
Amount	4 oz	7 oz	13.75 oz	29 oz	8.5-9.5 lbs	8.5-9.5 lbs
Amount (metric)	115 g	200 g	390 g	822 g	3.8-4.3 kg	3.8-4.3 kg
Hot gas setting (PSIG)	5	5	5	25	25	25
Hot gas setting (kPa)	35	35	35	172	172	172
Ambient (°F)	68	68	68	68	74	74
Fluid temp (°C)	20	20	20	20	20	20
Suction pressure (PSIG)	25-28	42-45	37-41	70	85-90	88-94
Suction pressure (kPa)	172-193	290-310	255-282	480	585-620	605-650
Discharge pressure (PSIG)	145-160	180-200	170-185	270	265-280	265-280
Discharge pressure (kPa)	1000-1100	1240-1380	1175-1275	1860	1827-1930	1827-1930
Speed check (°C/min)	4.0	2.5	4.6	2.8	6.4	6.4

6024

material safety data sheet (MSDS)

A Material Safety Data Sheet (MSDS) is designed to provide both workers and emergency personnel with the proper procedures for handling or working with that substance. MSDS will include information such as physical data (melting point, boiling point, flash point etc.), toxicity, health effects, first aid, reactivity, storage, disposal, protective equipment, and spill/leak procedures. These are of particular use if a spill or other accident occurs. This Material Safety Data Sheets is provided as a public service. It was gathered from a variety of sources. **Neither NESLAB Instruments, Inc., nor any of its agents are liable for the accuracy, or inaccuracy, of the Material Safety Data Sheet**. You assume the liability for the use of any part of this Material Safety Data Sheet.

R-134a refrigerant

DUPONT E I — SUVA COLD-MP, SUVA 134A
MATERIAL SAFETY DATA SHEET
FSC: 6830
NIIN: 00D003276
Manufacturer's CAGE: 02348
Part No. Indicator: A
Part Number/Trade Name: SUVA COLD-MP, SUVA 134A
==========
General Information
==========
Company's Name: DU PONT E I DE NEMOURS & CO
Company's Street: 1007 MARKET ST
Company's City: WILMINGTON
Company's State: DE
Company's Country: US
Company's Zip Code: 19899
Company's Emerg Ph #: 800-441-7515/800-441-3637
Company's Info Ph #: 800-441-7515
Record No. For Safety Entry: 001
Tot Safety Entries This Stk#: 001
Status: SE
Date MSDS Prepared: 12MAR94
Safety Data Review Date: 14JUL94
Supply Item Manager: CX
MSDS Preparer's Name: ENGIN. & PRODUCT SAFETY
Preparer's Company: DUPONT CHEMICALS
Preparer's St Or P. O. Box: POB 80709, CHESTNUT RUN
Preparer's City: WILMINGTON
Preparer's State: DE
Preparer's Zip Code: 19880-0709
MSDS Serial Number: BTRLM
Specification Number: NOT KNOWN
Hazard Characteristic Code: G3
Unit Of Issue: UK
Unit Of Issue Container Qty: UNKNOWN
Type Of Container: UNKNOWN
Net Unit Weight: UNKNOWN
==========
Ingredients/Identity Information
==========
Proprietary: NO
Ingredient: 1,1,1,2-TETRAFLUOROETHANE
Ingredient Sequence Number: 01
Percent: 100
NIOSH (RTECS) Number: 1008365TE
CAS Number: 811-97-2
OSHA PEL: NOT ESTABLISHED
ACGIH TLV: NOT ESTABLISHED
Other Recommended Limit: NONE RECOMMENDED
==========
Physical/Chemical Characteristics
==========
Appearance And Odor: LIQUEFIED GAS, SLIGHT ETHEREAL ODOR, COLORLESS.
Boiling Point: -16F,-27C
Melting Point: N/A
Vapor Pressure (MM Hg/70 F): 96PSIA@25C
Vapor Density (Air=1): 3.60 @25C
Specific Gravity: N/A
Decomposition Temperature: N/A
Solubility In Water: 0.15WT% @25C/14.7PSI
Percent Volatiles By Volume: 100
pH: N/A
==========
Fire and Explosion Hazard Data
==========
Flash Point: WILL NOT BURN

Lower Explosive Limit: N/A
Upper Explosive Limit: N/A
Extinguishing Media: AS APPROPRIATE FOR COMBUSTIBLES IN AREA.
Special Fire Fighting Proc: COOL CYLINDERS W/WATER SPRAY. SELF-CONTAINED BREATHING APPARATUS MAY BE REQUIRED IF CYLINDERS RUPTURE OR RELEASE UNDER FIRE CONDITIONS.
Unusual Fire And Expl Hazrds: CYLINDERS MAY RUPTURE UNDER FIRE CONDITONS. DECOMPO MAY OCCUR.EXPERIMENTAL DATA HAVE REPORTED COMBUST OF MATL IN PRESENCE OF CERTAIN CONCEN OF CHLORINE.SEE SUPPL

Reactivity Data

Stability: YES
Cond To Avoid (Stability): AVOID OPEN FLAMES AND HIGH TEMPERATURE. ALSO GLOWING METAL SURFACES.
Materials To Avoid: ALKALI OR ALKALINE EARTH METALS-POWDERED ALUMINUM, ZINC, BERYLIUM, ETC. CERTAIN CONCENTRATIONS OF CHLORINE.
Hazardous Decomp Products: DECOMPOSES @ HI TEMP FORMING HYDROFLUORIC ACID AND POSSIBLY CARBONYL FLUORIDE.
Hazardous Poly Occur: NO
Conditions To Avoid (Poly): NOT RELEVANT.

Health Hazard Data

LD50-LC50 Mixture: DUPONT'S 1000PPM, 8 & 12 HR TWA.
Route Of Entry - Inhalation: YES
Route Of Entry - Skin: YES
Route Of Entry - Ingestion: NO
Health Haz Acute And Chronic: INHAL OF HI CONCEN OF VAPOR IS HARMFUL & MAY CAUSE HEART IRREGULARITIES, UNCONSCIOUSNESS OR DEATH. VAPOR REDUCES OXYGEN AVAILABLE FOR BREATHING & IS HEAVIER THAN AIR. LIQ CONTACT CAN CAUSE FROSTBITE.
Carcinogenicity - NTP: NO
Carcinogenicity - IARC: NO
Carcinogenicity - OSHA: NO
Explanation Carcinogenicity: PER MSDS:NONE OF COMPONENTS PRESENT IN MATL @ CONCEN = OR < 0.1% ARE LISTED BY IARC,NTP, OSHA OR ACGIH AS A CARCINOGEN.
Signs/Symptoms Of Overexp: OVEREXOSURE BY INHAL TO VERY HI CONCEN MAY CAUSE TEMP ALTERATION OF THE HEART'S ELECTRICAL ACTIVITY WITH IRREGULAR PULSE, PALPITATIONS, OR INADEQUATE CIRCULATION. SKIN CONTACT WITH THE LIQUID MAY CAUSE FROSTBITE.
Med Cond Aggravated By Exp: INDIVIDUALS WITH PRE-EXISTING DISEASES OF THE CENTRAL NERVOUS OR CARDIOVASCULAR SYSTEM MAY HAVE INCREASED SUSCEPTIBILITY TO THE TOXICITY OF EXCESSIVE EXPOSURES.
Emergency/First Aid Proc: INHAL:IMMED REMOVE TO FRESH AIR.KEEP PERSON CALM.NOT BREATH GIVE ARTIF RESP.BREATH DIFFI GIVE OXY.CALL DR. SKIN:IMMED FLUSH W/LOTS OF H2O FOR @ LEAST 15MINS.REMOVE CONTAM CLOTH/SHOE.CALL DR. TREAT FOR FROSTBITE IF NECESSARY BY GENTLY WARMING AFFECTED AREA.EYE:IMMED FLUSH W/LOTS OF H2O FOR @ LEAST 15MINS.CALL DR. DR:BECAUSE POSSIBLE DISTRUBANCES OF CARDIAC RHYTHM USE CATECHOLAMINE DRUGS CAUTIOUSLY.

Precautions for Safe Handling and Use

Steps If Matl Released/Spill: REVIEW FIRE FIGHTING MEASURES BEFORE PROCEEDING W/CLEANUP.USE APPROPRIATE PPE DURING CLEANUP.VENTI AREAESPECIALLY LOW OR ENCLOSED PLACES WHERE HEAVY VAPORS COLLECT.REMOVE OPEN FLAMES.USE SCBA IF LG SPILL OR LEAK OCCURS.
Neutralizing Agent: NOT SPECIFIED BY MANUFACTURER.
Waste Disposal Method: CONTAMINATED HFC-134A CAN BE RECOVERED BY DISTILLATION OR REMOVED TO A PERMITTED WASTE DISPOSAL FACILITY. COMPLY WITH LOCAL, STATE AND FEDERAL REGULATIONS.
Precautions-Handling/Storing: STORE IN CLEAN, DRY AREA. DO NOT HEAT ABOVE 52C. USE W/SUFFICIENT VENTILATION TO KEEP EMPLOYEE EXPOSURE BELOW RECOMMENDED LIMITS.
Other Precautions: HFC-134A SHOULD NOT BE MIXED W/AIR FOR LEAK TESTING OR USEDS W/AIR FOR ANY OTHER PURPOSE ABOVE ATMOSPHERIC PRESSURE. SEE FIRE & EXPLOSION DATA & SUPPLEMENTAL SECS. CONTACT W/CHLORINE OR OTHER STRONG OXIDIZING AGENTS SHOULD ALSO BE AVOIDED.

Control Measures

Respiratory Protection: UNDER NORMAL MANUFACTURING CONDITIONS NO RESPIRATORY PROTECTION IS REQUIRED WHEN USING THIS PRODUCT. SELF-CONTAINED BREATHING APPARATUS (SCBA) IS REQUIRED IF A LARGE RELEASE OCCURS.
Ventilation: NORMAL VENTILATION FOR STANDARD MANUFACTURING PROCEDURES IS GENERALLY ADEQUATE.
Protective Gloves: IMPERVIOUS GLOVES.
Eye Protection: CHEM SPLASH GOGGLES.
Other Protective Equipment: NONE SPECIFIED BY MANUFACTURER.
Work Hygienic Practices: WASH CONTAMINATED CLOTHING/SHOE PRIOR TO REUSE.
Suppl. Safety & Health Data: MATL NOT FLAMM @ AMBIENT TEMP & ATM

PRESSURE.TESTS HAVE SHOWN COMBUSTIBLE @ PRESSURE AS LOW AS 5.5 PSIG @ 177C WHEN MIXED W/AIR @ CONCEN OF GENERALLY MORE THAN 60 VOLUME % AIR.AT LOWER TEMP,HIGHER PRESSURE ARE REQUIRED FOR COMBUSTIBILITY. DO NOT USE IN MED APPLICATINS INVOLVING PERMANENT IMPLANTATION IN THE HUMAN BODY.
==========
Transportation Data
==========
Trans Data Review Date: 94195
DOT PSN Code: DQQ
DOT Proper Shipping Name: COMPRESSED GASES, N.O.S. *
DOT Class: 2.2
DOT ID Number: UN1956
DOT Label: NONFLAMMABLE GAS
IMO PSN Code: EQH
IMO Proper Shipping Name: COMPRESSED GAS, N.O.S. *
IMO Regulations Page Number: 2125
IMO UN Number: 1956
IMO UN Class: 2(2.2)
IMO Subsidiary Risk Label: -
IATA PSN Code: HDO
IATA UN ID Number: 1956
IATA Proper Shipping Name: COMPRESSED GAS, N.O.S. * *
IATA UN Class: 2.2
IATA Label: NON-FLAMMABLE GAS
AFI PSN Code: HDO
AFI Prop. Shipping Name: COMPRESSED GAS, N.O.S.
AFI Class: 2.2
AFI ID Number: UN1956
AFI Label: NON-FLAMMABLE GAS
AFI Basic Pac Ref: 6-6,6-8,6-10
N.O.S. Shipping Name: COMPRESSED OR LIQUIFIED GAS, N.O.S (TETRAFLUOROETHANE).

R-22 refrigerant

E I DUPONT — FREON 22 - MONOCHLORODIFLUOROM
MATERIAL SAFETY DATA SHEET
NSN: 6830013825105
Manufacturer's CAGE: 18873
Part No. Indicator: A
Part Number/Trade Name: FREON 22
==========
General Information
==========
Item Name: MONOCHLORODIFLUOROM
Company's Name: E I DUPONT DE NEMOURS & CO
Company's Street: 1007 MARKET ST
Company's City: WILMINGTON
Company's State: DE
Company's Country: US
Company's Zip Code: 19898
Company's Emerg Ph #: 800-441-3637;800-424-9300(CHEMTREC)
Company's Info Ph #: 800-441-9442
Record No. For Safety Entry: 001
Tot Safety Entries This Stk#: 003
Status: SMJ
Date MSDS Prepared: 13AUG92
Safety Data Review Date: 15MAR95
MSDS Serial Number: BXBSX
==========
Ingredients/Identity Information
==========
Proprietary: NO
Ingredient: METHANE, CHLORODIFLUORO-; (CHLORODIFLUOROMETHANE) (SARA 313) (CERCLA)
Ingredient Sequence Number: 01
Percent: 100
NIOSH (RTECS) Number: PA6390000
CAS Number: 75-45-6
OSHA PEL: 1000 PPM
ACGIH TLV: 1000 PPM
———————————————-
Proprietary: NO
Ingredient: SUP DAT: IN THE PRESENCE OF CERTAIN CONCENTRATIONS OF CHLORINE.
Ingredient Sequence Number: 02
NIOSH (RTECS) Number: 9999999ZZ
OSHA PEL: NOT APPLICABLE
ACGIH TLV: NOT APPLICABLE

Proprietary: NO
Ingredient: VENT: VENTILATION SHOULD BE USED IN LOW OR ENCLOSED PLACES.
Ingredient Sequence Number: 03
NIOSH (RTECS) Number: 9999999ZZ
OSHA PEL: NOT APPLICABLE
ACGIH TLV: NOT APPLICABLE

Proprietary: NO
Ingredient: OTHER PREC: “FREON 22” SHOULD NOT BE MIXED W/AIR FOR LEAK TESTING. IN GEN, IT SHOULD NOT BE USED/ALLOWED TO BE (ING 5)
Ingredient Sequence Number: 04
NIOSH (RTECS) Number: 9999999ZZ
OSHA PEL: NOT APPLICABLE
ACGIH TLV: NOT APPLICABLE

Proprietary: NO
Ingredient: ING 4: PRESENT W/HIGH CONCS OF AIR ABOVE ATMOSPHERIC PRESS. CONT W/CHLORINE/OTHER STRONG OXIDIZING AGENTS SHOULD (ING 6)
Ingredient Sequence Number: 05
NIOSH (RTECS) Number: 9999999ZZ
OSHA PEL: NOT APPLICABLE
ACGIH TLV: NOT APPLICABLE

Proprietary: NO
Ingredient: ING 5: ALSO BE AVOIDED.
Ingredient Sequence Number: 06
NIOSH (RTECS) Number: 9999999ZZ
OSHA PEL: NOT APPLICABLE
ACGIH TLV: NOT APPLICABLE

Proprietary: NO
Ingredient: EFTS OF OVEREXP: OVEREXP. SKIN CONT W/LIQUID MAY CAUSE FRSTBT. INDIVIDUALS W/PREEXISTING DISEASES OF CNS OR (ING 8)
Ingredient Sequence Number: 07
NIOSH (RTECS) Number: 9999999ZZ
OSHA PEL: NOT APPLICABLE
ACGIH TLV: NOT APPLICABLE

Proprietary: NO
Ingredient: ING 7: CARDIOVASCULAR SYSTEM MAY HAVE INCREASED SUSCEPTIBILITY TO TOXICITY OF EXCESSIVE EXPOSURES.
Ingredient Sequence Number: 08
NIOSH (RTECS) Number: 9999999ZZ
OSHA PEL: NOT APPLICABLE
ACGIH TLV: NOT APPLICABLE
Other Recommended Limit: YN/KNONE RECOMMENDED

Proprietary: NO
Ingredient: HLTH HAZ: RANGING FROM 5% TO 70% INCLUDE EFTS ON CNS, LIVER, LUNGS, KIDNEYS, SPLEEN; CARDIAC SENSIT; DECREASED (ING 10)
Ingredient Sequence Number: 09
NIOSH (RTECS) Number: 9999999ZZ
OSHA PEL: NOT APPLICABLE
ACGIH TLV: NOT APPLICABLE

Proprietary: NO
Ingredient: ING 9: BODY WT GAIN, & PARTIAL ANESTH. IN CHRONIC INHAL STUDIES FC-22 PRODUCED A SM, BUT STATISTICALLY (ING 11)
Ingredient Sequence Number: 10
NIOSH (RTECS) Number: 9999999ZZ
OSHA PEL: NOT APPLICABLE
ACGIH TLV: NOT APPLICABLE

Proprietary: NO
Ingredient: ING 10: SIGNIFICANT, INCREASE OF TUMORS IN MALE RATS, BUT NOT FEMALE RATS OR MALE/FEMALE MICE AT A CONC OF (ING 12)
Ingredient Sequence Number: 11
NIOSH (RTECS) Number: 9999999ZZ
OSHA PEL: NOT APPLICABLE
ACGIH TLV: NOT APPLICABLE

Proprietary: NO
Ingredient: ING 11: 50000 PPM (V/V). FC-22 WAS MUTAGENIC IN BACTERIAL CELL CULTURES BUT NOT MAMMALIAN CELL CULTURES, & WAS (ING 13)
Ingredient Sequence Number: 12
NIOSH (RTECS) Number: 9999999ZZ
OSHA PEL: NOT APPLICABLE
ACGIH TLV: NOT APPLICABLE

Proprietary: NO

Ingredient: ING 12: NOT MUTAGENIC IN WHOLE ANIMAL ESSAYS. A SLIGHT, BUT SIGNIFICANT INCREASE IN DEVEL TOXICITY (EYE (ING 14)
Ingredient Sequence Number: 13
NIOSH (RTECS) Number: 9999999ZZ
OSHA PEL: NOT APPLICABLE
ACGIH TLV: NOT APPLICABLE
———————————————————-
Proprietary: NO
Ingredient: ING 13: MALFORMATIONS, DECR FETAL WTS) HAS BEEN OBSERVED IN OFFSPRING OF RATS EXPOSED TO HIGH CONCS (50000 PPM) (ING 15)
Ingredient Sequence Number: 14
NIOSH (RTECS) Number: 9999999ZZ
OSHA PEL: NOT APPLICABLE
ACGIH TLV: NOT APPLICABLE
———————————————————-
Proprietary: NO
Ingredient: ING 14: OF FC-22, CONC WHICH WAS ALSO MATERNALLY TOXIC. BASED ON FINDINGS, FC-22 IS NOT CONSIDERED A UNIQUE HAZ (ING 16)
Ingredient Sequence Number: 15
NIOSH (RTECS) Number: 9999999ZZ
OSHA PEL: NOT APPLICABLE
ACGIH TLV: NOT APPLICABLE
———————————————————-
Proprietary: NO
Ingredient: ING 15: TO CONCEPTUS & POSES NO CARCIN HAZ WHEN EXPOSURES ARE BELOW TLV. CHLOROFLUOROCARBON (CFC) MATLS HAVE (ING 17)
Ingredient Sequence Number: 16
NIOSH (RTECS) Number: 9999999ZZ
OSHA PEL: NOT APPLICABLE
ACGIH TLV: NOT APPLICABLE
———————————————————-
Proprietary: NO
Ingredient: ING 16: PRODUCED SENSIT OF MYOCARDIUM TO EPINEPHRINE IN LAB ANIMALS & COULD HAVE A SIMILAR EFT IN HUMANS. (ING 18)
Ingredient Sequence Number: 17
NIOSH (RTECS) Number: 9999999ZZ
OSHA PEL: NOT APPLICABLE
ACGIH TLV: NOT APPLICABLE
———————————————————-
Proprietary: NO
Ingredient: ING 17: ADRENOMIMETICS (E.G., EPINEPHRINE) MAY BE CONTRAINDICATED EXCEPT FOR LIFE-SUSTAINING USES IN HUMANS (ING 19)
Ingredient Sequence Number: 18
NIOSH (RTECS) Number: 9999999ZZ
OSHA PEL: NOT APPLICABLE
ACGIH TLV: NOT APPLICABLE
———————————————————-
Proprietary: NO
Ingredient: ING 18: ACUTELY OR CHRONICALLY EXPOSED TO CFC'S.
Ingredient Sequence Number: 19
NIOSH (RTECS) Number: 9999999ZZ
OSHA PEL: NOT APPLICABLE
ACGIH TLV: NOT APPLICABLE
———————————————————-
Proprietary: NO
Ingredient: % VOLAT: 100 (WT).
Ingredient Sequence Number: 20
NIOSH (RTECS) Number: 9999999ZZ
OSHA PEL: NOT APPLICABLE
ACGIH TLV: NOT APPLICABLE
==========

Physical/Chemical Characteristics

==========
Appearance And Odor: CLEAR, COLORLESS LIQUEFIED GAS WITH SLIGHT ETHEREAL ODOR
Boiling Point: -41F,-41C
Vapor Pressure (MM Hg/70 F): 151 PSIG
Vapor Density (Air=1): 3.03
Specific Gravity: 1.194
Evaporation Rate And Ref: >1
Solubility In Water: 0.30 WT % @ 25C
Percent Volatiles By Volume: ING 20
pH: NEUT
==========

Fire and Explosion Hazard Data

==========
Flash Point: NONE
Flash Point Method: TOC
Extinguishing Media: AS APPROPRIATE FOR COMBUSTIBLES IN AREA. EXTINGUISHANT FOR OTHER BURNING MATERIAL IN AREA IS SUFFICIENT TO STOP

BURNING.
Special Fire Fighting Proc: WEAR NIOSH/MSHA APPRVD PRESSURE DEMAND SCBA & FULL PROT EQUIP (FP N). USE WATER SPRAY/FOG TO COOL CONTAINERS.
Unusual Fire And Expl Hazrds: THERMAL DECOMP PRODS MAY INCLUDE CHLORIDES, FLUORIDES & PHOSGENE (FP N). OTHER BURNING MATLS MAY CAUSE HCFC 22 TO BURN WEAKLY. CHLORODIFLUOROMETHANE (SUP DAT)

==========

Reactivity Data

==========

Stability: YES
Cond To Avoid (Stability): AVOID OPEN FLAMES AND HIGH TEMPERATURES.
Materials To Avoid: ALKALI OR ALKALINE EARTH METALS (POWDERED AL, ZN, BE, ETC.).
Hazardous Decomp Products: HIGH TEMPS (OPEN FLAMES, GLOWING METAL SURFS, ETC.) FORMING HYDROCHLORIC & HYDROFLUORIC ACIDS, & POSS CARBONYL (SUP DAT)
Hazardous Poly Occur: NO
Conditions To Avoid (Poly): NOT RELEVANT.

==========

Health Hazard Data

==========

LD50-LC50 Mixture: NONE SPECIFIED BY MANUFACTURER.
Route Of Entry - Inhalation: YES
Route Of Entry - Skin: YES
Route Of Entry - Ingestion: NO
Health Haz Acute And Chronic: INHAL OF HIGH CONCS OF VAP IS HARMFUL & MAY CAUSE IRREGULARITIES, UNCONSCIOUSNESS/DEATH. INTENTIONAL MISUSE/DELIBERATE INHAL MAY CAUSE DEATH WITHOUT WARNING. VAP REDUCES OXYGEN AVAILABLE FOR BRTHG & IS HVR/AIR. LIQUID CONT CAN CAUSE FRSTBT. ANIMAL DATA: TOXICITY DESCRIBED IN ANIMALS EXPOSED BY INHAL TO CONCS (ING 9)
Carcinogenicity - NTP: NO
Carcinogenicity - IARC: NO
Carcinogenicity - OSHA: NO
Explanation Carcinogenicity: NOT RELEVANT.
Signs/Symptoms Of Overexp: OVEREXP TO VAPS BY INHAL MAY INCLUDE TEMPORARY NERVS SYS DEPRESS W/ANESTH EFTS SUCH AS DIZZ, HDCH, CONFUSN, INCOORD, & LOSS OF CONSCIOUSNESS. HIGHER EXPOS TO VAPS MAY CAUSE TEMPORARY ALTERATION OF HEART'S ELEC ACTIVITY W/IRREGULAR PULSE, PALPITATIONS/ INADEQUATE CIRCULATION. FATALITY MAY OCCUR FROM GROSS (ING 7)
Med Cond Aggravated By Exp: BECAUSE OF POSSIBLE DISTURBANCES OF CARDIAC RHYTHM, CATECHOLAMINE DRUGS, SUCH AS EPINEPHRINE, SHOULD ONLY BE CONSIDERED AS A LAST RESORT IN LIFE-THREATENING EMERGENCIES.
Emergency/First Aid Proc: INHAL: IF LGE CONCS ARE INHALED, IMMED REMOVE TO FRESH AIR. KEEP PERS CALM. IF NOT BRTHG, GIVE ARTF RESP. IF BRTHG IS DIFFICULT, GIVE OXYGEN. CALL MD. SKIN CONT: FLUSH W/WATER FOR 15 MIN. TREAT FOR FROSTBT IF NEC BY GENTLY WARMING AFFECTED AREA. IF IRRIT IS PRESENT, CALL MD. EYES: IMMED FLUSH W/PLENTY OF WATER FOR AT LEAST 15 MIN. CALL MD. INGEST: NOT CONSIDERED A POTENTIAL ROUTE OF EXPOSURE.

==========

Precautions for Safe Handling and Use

==========

Steps If Matl Released/Spill: NOTE: REVIEW FIRE & EXPLOS HAZ & SFTY PREC BEFORE PROCEEDING W/CLEAN UP. USE APPROP PERSONAL PROT EQUIP DURING CLEAN UP. VENT AREA, ESPECIALLY LOW/ENCLOSED PLACES WHERE HEAVY VAPS MIGHT COLLECT. REMOVE OPEN FLAMES. USE SCBA FOR LGE SPILLS/RELEASES.
Neutralizing Agent: NONE SPECIFIED BY MANUFACTURER.
Waste Disposal Method: COMPLY WITH FEDERAL, STATE, AND LOCAL REGULATIONS. RECLAIM BY DISTILLATION OR REMOVE TO A PERMITTED WASTE DISPOSAL.
Precautions-Handling/Storing: STORE IN CLEAN, DRY AREA. DO NOT HEAT ABOVE 52C (125F).
Other Precautions: NO SMKNG IN AREA OF USE. DO NOT USE IN GEN VICIN OF ARC WELDING, OPEN FLAMES/HOT SURFS. HEAT &/UV RADIA MAY CAUSE FORM OF CHLORIDES, FLUORIDES &/PHOSGENE (FP N). USE W/SUFFICIENT VENT TO KEEP EMPLOYEE EXPOS BELOW RECOMMENDED LIMITS. (ING 4)

==========

Control Measures

==========

Respiratory Protection: UNDER NORMAL MANUFACTURING CONDITIONS, NO RESPIRATORY PROTECTION IS REQUIRED WHEN USING THIS PRODUCT. USE NIOSH/MSHA APPROVED SCBA WHEN A LARGE RELEASE OCCURS.
Ventilation: NORM VENT FOR STANDARD MFG PROC IS GEN ADEQ. LOC EXHAUST SHOULD BE USED WHEN LARGE AMOUNTS ARE RELEASED. MECH (ING 3)
Protective Gloves: IMPERVIOUS GLOVES (FP N).
Eye Protection: ANSI APPRVD CHEM WORKERS GOGGS(FP N).
Other Protective Equipment: EMERGENCY EYEWASH & DELUGE SHOWER MEETING ANSI DESIGN CRITERIA (FP N).
Work Hygienic Practices: NONE SPECIFIED BY MANUFACTURER.
Suppl. Safety & Health Data: HAZ DECOMP PROD: HALIDES, PHOSGENE (FP N).
EXPLO HAZ: IS NOT FLAM AT AMBIENT TEMPS & ATMOSPHERIC PRESS. HOWEVER IT HAS BEEN SHOWN IN TESTS TO BE COMBUST AT PRESS AS LOW AS 60 PSIG AT AMBIENT TEMP WHEN MIXED W/AIR AT CONCS OF 65 VOL & AIR. EXPTL DATA HAVE ALSO BEEN REPORTED WHICH INDICATE COMBUST OF “FREON” 22 (ING 2)

==========
Transportation Data
==========
Trans Data Review Date: 95254
DOT PSN Code: IIC
DOT Proper Shipping Name: LIQUEFIED GASES
DOT Class: 2.2
DOT ID Number: UN1058
DOT Label: NONFLAMMABLE GAS
IMO PSN Code: IZR
IMO Proper Shipping Name: LIQUEFIED GASES,NON-FLAMMABLE,CHARGED WITH NITROGEN,CARBON DIOXIDE OR AIR
IMO Regulations Page Number: 2155
IMO UN Number: 1058
IMO UN Class: 2(2.2)
IMO Subsidiary Risk Label: -
IATA PSN Code: PDL
IATA UN ID Number: 1058
IATA Proper Shipping Name: LIQUEFIED GASES
IATA UN Class: 2.2
IATA Label: NON-FLAMMABLE GAS
AFI PSN Code: PDL
AFI Prop. Shipping Name: LIQUEFIED GASES
AFI Class: 2.2
AFI ID Number: UN1058
AFI Label: NON-FLAMMABLE GAS
AFI Basic Pac Ref: 6-6,6-8
==========
Disposal Data
==========
==========
Label Data
==========
Label Required: YES
Technical Review Date: 16MAR95
Label Date: 16MAR95
Label Status: G
Common Name: FREON 22
Chronic Hazard: NO
Signal Word: WARNING!
Acute Health Hazard-Slight: X
Contact Hazard-Moderate: X
Fire Hazard-None: X
Reactivity Hazard-None: X
Special Hazard Precautions: ACUTE: INHALATION OF VAPORS MAY CONTRIBUTE TO THE OCCURRENCE OF IRREGULAR HEART BEAT (FP N). CONTACT WITH LIQUID MAY NONE SPECIFIED BY MANUFACTURER.
Protect Eye: Y
Protect Skin: Y
Protect Respiratory: Y
Label Name: E I DUPONT DE NEMOURS & CO
Label Street: 1007 MARKET ST
Label City: WILMINGTON
Label State: DE
Label Zip Code: 19898
Label Country: US
Label Emergency Number: 800-441-3637;800-424-9300(CHEMTREC)
==========
URL for this msds http://siri.org. If you wish to change, add to, or
delete information in this archive please sent updates to dan@siri.org.

Service bulletin
U00336
30 Sep. 1998

CFT75: solenoid valve change

1. What units are affected?

model:	**CFT 75 R134A ONLY (not R22 or R12)**
part numbers:	**395xxxxxxxxx**
serial numbers:	**this change occurs at serial number 198223000**
date of manufacture:	**this change occurs August 11, 1998**

2. What is the problem/symptom?

The unit may runaway cold, even though the controller is calling for heating.

3. What is the cause?

The installed liquid line solenoid valve (PN 009475 - type XUP) is not optimum for this application.

4. What is the fix?

The solenoid valve is replaced by a different one (PN 009741 - type XWG).

5. Should we fix any existing units (rework or recall units in the field)?

It is not necessary to service any units that operate correctly. If a unit exhibits this symptom, the valve should be replaced with the new one. The coil is the same and may be reused.

6. How do I get replacement parts or more information?

Consult NESLAB Technical Service.

7. Need more information?

Current service information is available 24 hours a day on NESLAB ONLINE. Service information is available on the NESLAB OFFLINE 1998 cd-rom.

Service manual **000877** is available for CFT75 units using traditional (“Banks”) controllers with a controller code of 01 or 02 (the controller code is the ninth and tenth digits of the 12-digit unit part number). This manual is available on paper, on cd-rom, and online. Service manual **U00320** is available for CFT75 units using the newer TC200 controllers with a controller code of 15 (the controller code is the ninth and tenth digits of the 12-digit unit part number). This manual is available on paper, or online.

Refer to PCO (Product Change Order) **12173.**

Test sheets are available on microfiche at all NESLAB offices.

Service bulletin
U00349
18 May 1999

1. What units are affected?

model: **CFT-33**

part numbers: **394106031501 394106031502 394106031503 394106031504 394106041501 394106041502 394106041503 394106041504 394106041505 394106041506 394106121501 394106991501 394106991502**

serial numbers (approximate range): **196270001 to 199130001**

date of manufacture: **from late 1996 to May 1999**

2. What is the problem/symptom?

When main power is applied the compressor will not start and the compressor motor overload quickly trips. The start capacitor will appear to be shorted when checked with an ohmmeter.

3. What is the cause?

Wires may have been incorrectly attached to the start capacitor by the condensing unit manufacturer so that the capacitor is shorted. Actual short is between the wire terminal and the end cap of the bleeder resistor. A shorted capacitor can not participate in the compressor start cycle and as a result the compressor motor may not start.

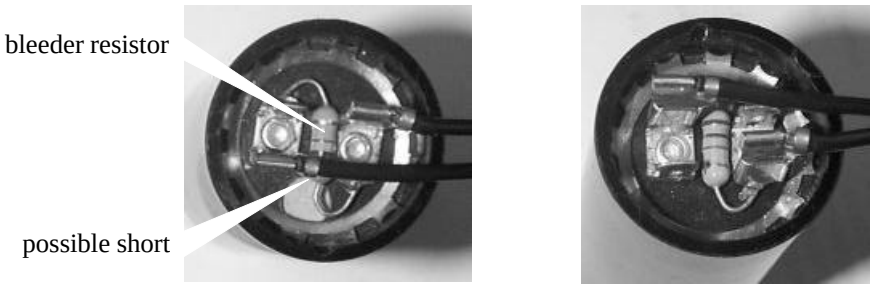

wrong right

4. What is the fix?

If capacitor is wired incorrectly, disconnect from line voltage and rewire start capacitor as indicated. Replace bleeder resistor if the enamel is damaged. Unit should now start normally.

5. Should we fix any existing units (rework or recall units in the field)?

All units returned for servicing should be checked for correct capacitor wiring. Units found to be incorrectly wired should be reworked as shown.

6. Who can I call for help?

Our Technical service group is ready to help you sort out issues involving product performance.

Year 2000 statement

NESLAB Instruments, Inc.
P.O. Box 1178 Portsmouth, NH 03802-1178 800/258-0830 FAX (603 436-8411)
Revised 18 May 1999
Subject: Y2K Year 2000 Policy Statement

NESLAB Instruments Inc. and the Year 2000. NESLAB Instruments Inc. recognizes the importance of providing our customers with products that will continue to function correctly during the Year 2000 and beyond. NESLAB is also committed to communicating to its customers its status with respect to Year 2000 compliance.

Definition. NESLAB Instruments has adopted the following definition of Year 2000 compliance as set forth by the British Standards Institution in DISC PD2000-1 A Definition of Year 2000 Conformity Requirements (available on the Internet at http://www.bsi.org.uk/disc/year2000.html), with the qualification that the upper limit for compliance is the year 2035:

Year 2000 conformity shall mean that neither performance nor functionality is affected by dates prior to, during, and after the year 2000. In particular:

Rule 1: No value for current date will cause any interruption in operation.
Rule 2: Date-based functionality must behave consistently for dates prior to, during, and after year 2000.
Rule 3: In all interfaces and data storage, the century in any date must be specified either explicitly or by unambiguous algorithms or inferencing rules.
Rule 4: Year 2000 must be recognized as a leap year.

Our Products. It is our goal that our customers can continue to use our Products during and after the Year 2000. NESLAB Instruments has carried out a review of its products with respect to Year 2000 compliance.

There are no current NESLAB products which incorporate clock or calendar functions. Therefore, we believe all of our current products to be Year 2000 compliant.

Additional information about NESLAB Instruments' products can be found at our website (http://www.neslabinc.com).

Internal Business Systems. NESLAB has carried out a review of its products and its internal systems with respect to Year 2000 compliance.

NESLAB houses an IBM AS/400 system that runs MAPICS XA R3 MRP software. This software package is fully Year 2000 compliant. NESLAB also utilizes Windows 95 and other Microsoft products on the desktop; all of these software products are also Year 2000 compliant. In addition, NESLAB will be performing internal testing to further ensure Year 2000 compliance of these systems.

In addition, NESLAB Instruments is contacting its key vendors/suppliers to assess their Year 2000 readiness.

Summary

In summary, NESLAB Instruments, Inc. believes that its products and its internal business systems are currently Year 2000 compliant.

Customer Commitment. NESLAB Instruments recognizes the importance of this issue to our customers. If you have additional questions, please contact Mr. Mike Pratt of our technical support group.

Nothing in this statement is intended to modify rights and obligations under any agreement or to create any new rights or obligations between NESLAB Instruments and our customers.

Sincerely,

James R. Allen
Vice President Finance, Systems & Administration

* Mike Pratt: (603) 430-2245, mike.pratt@neslabinstruments.com

US Headquarters
NESLAB Instruments, Inc.
P.O. Box 1178
Portsmouth, NH 03802-1178
(800) 258-0830
(603) 436-9444
Fax: (603) 436-8411

West Coast
32970 Alvarado/Niles Road
Suite 708
Union City, CA 94587
(800) 423-7831
(510) 429-1890
Fax: (510) 429-1898

Texas and South Central States
8711 Burnet Road
Suite F69
Austin, TX 78757-7065
(512) 459-2167
Fax: (512) 459-1731

Canada
11 Hamilton Crescent
Georgetown, Ontario L7G 5J4
(905) 702-0656
Fax: (905) 702-0629

European Headquarters
The Netherlands
NESLAB Instruments Europa B.V.
Meerenakkerplein 31
5652 BJ
Eindhoven
The Netherlands
31 40-2300456
Fax: 31 40-2549485

United Kingdom
93-96 Chadwick Road
Astmoor, Runcorn, Cheshire
WA71PR UK
44 (019) 28562655
Fax: 44 (019) 28562656

Germany
Industriering Ost 66
D-47906 Kempen
Phone number: 49 2152/1417-30
Fax number: 49 2152/1417-55

France
70, rue Berthie Albrecht
94784 Vitry sur Seine cedex
011 331 43 91 17 00
Fax: 011 331 43 91 17 01

Main Service Center

The NESLAB Main Service Center is open 8:00 am to 5:00 pm (Eastern Time), Monday through Friday.
NESLAB Instruments, Inc.
P.O. Box 1178
Portsmouth, NH 03802-1178
Phone: (800) 258-0830 or (603) 436-9444
Fax: (603) 436-8411

Cryotrol Temperature Controller

Instruction and Operation Manual



Thermo NESLAB Manual P/N 000803
Rev. 04/05/99

Cryotrol Temperature Controller
Instruction and Operation Manual

Table of Contents

Preface

Compliance 1

Unpacking 1

Warranty 1

After-sale Support 1

SECTION I
Safety

Warnings 1

SECTION II
General Information

Description 3

Specifications 3

SECTION III
Installation

Site 4

Electrical Requirements 4

Sensor 4

SECTION IV
Operation

Start Up 5

Temperature Adjustment 5

Maintenance

Service Contracts 6

Cleaning 6

Calibration 6

SECTION VI
Troubleshooting

Checklist 7

Service Assistance 7

Technical Support 7

SECTION VII
Warranty 8

Preface

Compliance

Products tested and found to be in compliance with the requirements defined in the EMC standards defined by 89/336/EEC as well as Low Voltage Directive (LVD) 73/23/EEC can be identified by the CE label on the rear of the unit. This label indicates testing has demonstrated compliance with the following directives:

LVD, 73/23/EEC	Complies with UL 3101-1:93
EMC, 89/336/EEC	EN 55011, Class A Verification
	EN 50082-1:1992
	IEC 1000-4-2:1995
	IEC 1000-4-3:1994
	IEC 1000-4-4:1995

For any additional information refer to the Letter of Compliance that shipped with the unit (Declaration of Conformity).

Unpacking

Retain all cartons and packing material until the unit is operated and found to be in good condition. If the unit shows external or internal damage, or does not operate properly, contact the transportation company and file a damage claim. Under ICC regulations, this is your responsibility.

Warranty

Units are warranted against defective parts and workmanship for one full year from date of shipment. See back page for more details.

After-sale Support

Thermo NESLAB is committed to customer service both during and after the sale. If you have questions concerning the operation of your unit, contact our Sales Department. If your unit fails to operate properly, or if you have questions concerning spare parts or Service Contracts, contact our Customer Service Department. Before calling, please obtain the following information from the unit's serial number label:

*BOM Number*_____

*Serial Number*_____

Section I Safety

Warnings

Make sure you read and understand all instructions and safety precautions listed in this manual before installing or operating your unit. If you have any questions concerning the operation of your unit or the information in this manual, contact our Sales Department (see After-sale Support).

Performance of installation, operation, or maintenance procedures other than those described in this manual may result in a hazardous situation and may void the manufacturers warranty.

Observe all warning labels.

Never remove warning labels.

Never operate damaged equipment.

Refer service and repairs to a qualified technician.

Sales Centers

North American and European Thermo NESLAB Sales and Service Centers are open 8:00 am to 5:00 pm (in their respective time zones), Monday through Friday.

US Headquarters
Thermo NESLAB Instruments, Inc.
P.O. Box 1178
Portsmouth, NH 03802-1178
(800) 258-0830
(603) 436-9444
Fax: (603) 436-8411

Main Service Center
The Thermo NESLAB Main Service Center is open 8:00 am to 5:00 pm (Eastern Time), Monday through Friday.
Thermo NESLAB Instruments, Inc.
P.O. Box 1178
Portsmouth, NH 03802-1178
Phone: (800) 258-0830 or (603) 436-9444
Fax: (603) 436-8411

West Coast
32970 Alvarado/Niles Road
Suite 708
Union City, CA 94587
(800) 423-7831
(510) 429-1890
Fax: (510) 429-1898

European Headquarters
The Netherlands
Thermo NESLAB Instruments Europa BV
Meerenakkerplein 31
5652 BJ Eindhoven
31 40 2300456
Fax: 31 40 2549485

Germany
Industriering Ost 66
D-47906 Kempen
49 2152 1417 30
Fax: 49 2152 1417 55

United Kingdom
93-96 Chadwick Road
Astmoor, Runcorn, Cheshire
WA71PR UK
44 (019) 28562655
Fax: 44 (019) 28562656

France
70, rue Berthie Albrecht
94784 Vitry-sur-Seine cedex
01 43 91 17 00
Fax: 01 43 91 17 01

Service Center

The Thermo NESLAB Service Center is open 8:00 am to 5:00 pm (Eastern Time), Monday through Friday.

Headquarters
Thermo NESLAB Instruments, Inc.
P.O. Box 1178
Portsmouth, NH 03802-1178
Phone: (800) 258-0830 or (603) 427-2877
Fax: (603) 436-8411

Section II General Information

Description

The Cryotrol Temperature Controller is an analog temperature controller designed to control the temperature of a CryoCool Immersion Cooler, a PBC Portable Bath Cooler, or a Cryobath Low Temperature Bath. The Cryotrol provides the host unit with temperature stability of ±0.5°C.

The unit consists of solid state, zero crossover relay and a temperature sensor.

Specifications

Temperature Range	-100°C to +20°C
Sensor	Stainless Steel 4' (1.2M) lead
Sensor Dimensions	
(Diameter x Length) In.	3/16 x 10
Cm.	0.5 x 25.4
Power Requirements	115 V, 60 Hz, 0.6 Amps
50 Hz Models	220-240 V, 50 Hz, 0.3 Amps
Shipping Weight	
Pounds	6
Kilograms	2.7

Section III Installation

Site

The unit should be located on a sturdy table or bench top.

Never place the unit in a location where excessive heat, moisture, or corrosive materials are present.

Electrical Requirements

The Cryotrol receives its power from the host unit. Plug the 6 pin connector from the Cryotrol into the 6 pin receptacle on the host unit. When properly connected, the Power lamp on the front of the Cryotrol will light when the host unit is turned on.

Older CryoCool, Cryobath, and PBC units are equipped with a round 8 pin receptacle. If you wish to connect your Cryotrol to one of these older host units, an adapter cable is available from Thermo NESLAB. Contact our Customer Service Department for more information (see Preface, After-sale Support).

Sensor

Insert the Cryotrol temperature sensor into the fluid work area.

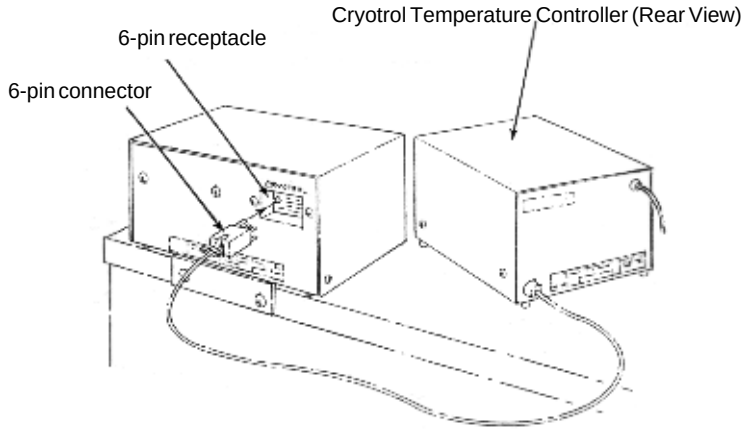

Cryotrol Installation (Typical)

Section IV Operation

Start Up

Before starting the unit, double check the electrical connections, make sure the temperature sensor is inserted in the work area, and make sure the calibrated temperature dial is adjusted for a temperature lower than the fluid in the bath.

When the host unit is shut off, wait approximately five minutes before restarting. This allows time for the refrigeration pressures to equalize. If the pressures are not allowed to equalize, the compressor will short-cycle (clicking sound) and no cooling will occur.

Temperature Adjustment

To adjust the temperature of the fluid in the work area, turn the calibrated dial and position the reference line as close as possible to the desired temperature. The Cool lamp on the front of the controller indicates the status of the refrigeration system in the host unit.

Do not operate CryoCool or Cryobath units above -25°C.

For best results, stirring or agitation in the work area is recommended. With no stirring the work area will show temperature layering, and the coldest, most dense fluid will be at the bottom.

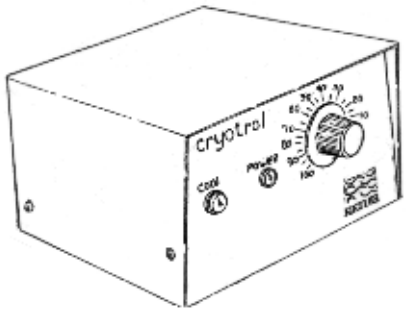

Cryotrol Temperature Controller (Front)

Section V Maintenance

Service Contracts

Thermo NESLAB offers on-site Service Contracts that are designed to provide extended life and minimal down-time for your unit. For more information, contact our Customer Service Department (see Preface, After-sale Support).

Cleaning

Periodically clean the unit using a soft, non-abrasive cloth.

Calibration

The Cryotrol must be periodically calibrated. The frequency of calibration depends on the amount and type of use. Thermo NESLAB recommends checking the Cryotrol against a calibrated reference thermometer once a month after initial installation. After several months, the frequency of calibration will be established.

Equipment required:

The Cryotrol's host unit.

Calibrated reference thermometer, accurate to ±1°C. A Thermo NESLAB DR-2 digital thermometer is recommended.

If calibrating the Cryotrol with a CryoCool immersion cooler or PBC portable bath cooler, an insulated container, filled with non-freezing fluid is required. A Thermo NESLAB U-tainer, or Agitainer insulated container is recommended.

Calibration:

Calibrating the Cryotrol with a Cryobath: insert the Cryotrol sensor and the reference thermometer sensor in the host unit's bath.

Calibrating the Cryotrol with a CryoCool or PBC: insert the Cryotrol sensor, the reference thermometer sensor and the host unit's probe in the insulated container.

Adjust the Cryotrol's temperature dial for -40°C (-20°C on PBC units). Align the dial's reference line as close as possible with -40°C (-20°C).

Remove the temperature dial.

Turn the Cryotrol on. Allow time for the fluid temperature in the bath or insulated container to stabilize.

Replace the temperature dial, aligning the reference line as close as possible to the temperature indicated on the reference thermometer.

Section VI Troubleshooting

Checklist

Power lamp is not lit.

Check electrical connection between Cryotrol and host unit (see Section III, Electrical Requirements).

Host unit is not on.

Power lamp may have failed.

No temperature control.

Check electrical connection between Cryotrol and host unit (see Section III, Electrical Requirements).

Make sure the temperature sensor is in the fluid work area.

Stirring or agitation in the work area is necessary (see Section IV, Temperature Adjustment).

Service Assistance

If, after following these troubleshooting steps, your unit fails to operate properly, contact our Customer Service Department for assistance (see Preface, After-sale Support). Before calling, please obtain the following information:

BOM number

Serial number

Voltage of unit

Voltage of power source

Technical Support

Our Customer Service Department can provide you with a wiring diagram and a complete list of spare parts for your unit (see Preface, After-sale Support). Before calling, please obtain the following information:

BOM number

Serial number

Section VII Warranty

Thermo NESLAB Instruments, Inc. warrants for 12 months from date of shipment any Thermo NESLAB unit according to the following terms.

Any part of the unit manufactured or supplied by Thermo NESLAB and found in the reasonable judgment of Thermo NESLAB to be defective in material or workmanship will be repaired at an authorized Thermo NESLAB Repair Depot without charge for parts or labor. The unit, including any defective part must be returned to an authorized Thermo NESLAB Repair Depot within the warranty period. The expense of returning the unit to the authorized Thermo NESLAB Repair Depot for warranty service will be paid for by the buyer. Thermo NESLAB's responsibility in respect to warranty claims is limited to performing the required repairs or replacements, and no claim of breach of warranty shall be cause for cancellation or recision of the contract of sales of any unit.With respect to units that qualify for field service repairs, Thermo NESLAB's responsibility is limited to the component parts necessary for the repair and the labor that is required on site to perform the repair. Any travel labor or mileage charges are the financial responsibility of the buyer.

The buyer shall be responsible for any evaluation or warranty service call (including labor charges) if no defects are found with the Thermo NESLAB product.

This warranty does not cover any unit that has been subject to misuse, neglect, or accident. This warranty does not apply to any damage to the unit that is the result of improper installation or maintenance, or to any unit that has been operated or maintained in any way contrary to the operating or maintenance instructions specified in Thermo NESLAB's Instruction and Operation Manual. This warranty does not cover any unit that has been altered or modified so as to change its intended use.

In addition, this warranty does not extend to repairs made by the use of parts, accessories, or fluids which are either incompatible with the unit or adversely affect its operation, performance, or durability.

Thermo NESLAB reserves the right to change or improve the design of any unit without assuming any obligation to modify any unit previously manufactured.

THE FOREGOING EXPRESS WARRANTY IS IN LIEU OF ALL OTHER WARRANTIES, EXPRESSED OR IMPLIED, INCLUDING BUT NOT LIMITED TO WARRANTIES OR MERCHANTABILITY AND FITNESS FOR A PARTICULAR PURPOSE.

Thermo NESLAB'S OBLIGATION UNDER THIS WARRANTY IS STRICTLY AND EXCLUSIVELY LIMITED TO THE REPAIR OR REPLACEMENT OF DEFECTIVE COMPONENT PARTS AND Thermo NESLAB DOES NOT ASSUME OR AUTHORIZE ANYONE TO ASSUME FOR IT ANY OTHER OBLIGATION.

Thermo NESLAB ASSUMES NO RESPONSIBILITY FOR INCIDENTAL, CONSEQUENTIAL, OR OTHER DAMAGES INCLUDING, BUT NOT LIMITED TO LOSS OR DAMAGE TO PROPERTY, LOSS OF PROFITS OR REVENUE, LOSS OF THE UNIT, LOSS OF TIME, OR INCONVENIENCE.

This warranty applies to units sold in the United States. Any units sold elsewhere are warranted by the affiliated marketing company of Thermo NESLAB Instruments, Inc. This warranty and all matters arising pursuant to it shall be governed by the law of the State of New Hampshire, United States. All legal actions brought in relation hereto shall be filed in the appropriate state or federal courts in New Hampshire, unless waived by Thermo NESLAB.

EX Series Bath Circulator
with
Microprocessor Controller

NESLAB P/N 000261
Rev. 08/13/97

Instruction and Operation Manual

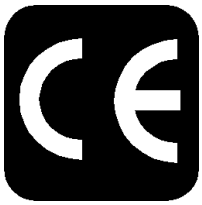

NESLAB online

Product Service Information, Electronic Catalog,
Applications Notes, MSDS Forms, e-mail.

(603)427-2490

Set modem to 8-N-1 protocol, 1200 - 14400 baud

Voice Info: (800) 4-NESLAB

Comments on this manual can be sent to:

NESLAB@lifesciences.com

or visit our Web page at:

http://www.neslabinc.com

EX-Series Refrigerated Bath Circulator
Table of Contents

PREFACE

Compliance 2
Unpacking 2
Warranty 2
After-sale Support 2

SECTION I
Safety

Warnings 3

SECTION II
General Information

Description 4
Specifications 4

SECTION III
Installation

Site 6
Electrical Requirements 6
Plumbing Requirements 7
Tap Water Cooling Coil 9
Drain 9
Fluids 9
Filling Requirements 9

SECTION IV
Controllers

Microprocessor Controller 10
Start Up 12
Temperature Adjustment 12
Alarm/External Functions 13
Program Functions 14
Program Control 16
Error Messages 19
Miscellaneous 19
PID Control 20
Restoring Factory PID Values 20
Calibration 21
High Temperature/Low Liquid Level Safety 23

SECTION V
Maintenance

Service Contracts 24
Reservoir Cleaning 24
Algae 24

SECTION VI
Troubleshooting

Checklist 25
Service Assistance and Technical Support 26

APPENDIX A

RS-232

APPENDIX B

International Quick Reference Guides

APPENDIX C

Programming Software

WARRANTY

Preface

Compliance

Products tested and found to be in compliance with the requirements defined in the EMC standards defined by 89/336/EEC as well as Low Voltage Directive (LVD) 73/23/EEC can be identified by the CE label on the rear of the unit. This label indicates testing has demonstrated compliance with the following directives:

LVD, 73/23/EEC	Complies with UL 3101-1:93
EMC, 89/336/EEC	EN 55011, Class A Verification EN 50082-1:1992 IEC 1000-4-2:1995 IEC 1000-4-3:1994 IEC 1000-4-4:1995

For any additional information refer to the Letter of Compliance that shipped with the unit (Declaration of Conformity).

Unpacking

Retain all cartons and packing material until the unit is operated and found to be in good condition. The unit control box for microprocessor units is packed in a separate carton. Be sure to locate this separate carton; do not dispose of it by mistake.

If the unit shows external or internal damage, or does not operate properly, contact the transportation company and file a damage claim. Under ICC regulations, this is your responsibility.

Warranty

Units have a warranty against defective parts and workmanship for one full year from date of shipment. See back page for more details.

After-sale Support

NESLAB is committed to customer service both during and after the sale. If you have questions concerning the operation of your unit, contact our Sales Department. If your unit fails to operate properly, or if you have questions concerning spare parts or Service Contracts, contact our Customer Service Department. Before calling, please obtain the following information from the unit's serial number label:

- *BOM number* _____

- *Serial number* _____

Section I Safety

Warnings

Make sure you read and understand all instructions and safety precautions listed in this manual before installing or operating your unit. If you have any questions concerning the operation of your unit or the information in this manual, contact our Sales Department.

Performance of installation, operation, or maintenance procedures other than those described in this manual may result in a hazardous situation and may void the manufacturer's warranty.

Transport the unit with care. Sudden jolts or drops can damage the refrigeration lines.

Observe all warning labels.

Never remove warning labels.

Never operate damaged or leaking equipment.

Never operate the unit without bath fluid in the bath.

Never use pure ethylene glycol as a bath fluid. A minimum 80/20 mixture of Ethylene Glycol and tap water is allowed.

For 220 - 240 volt units supplied without a line cord, use a harmonized (HAR) grounded 3-conductor cord, type H 0 5 V V - F , with conductors listed below. A suitable cord end is required for connecting to the equipment (see unit socket) and must terminate with an IEC approved plug for proper connection to power supply.

NON-BOOST HEATER UNITS	**Nominal 1.0 mm^2 cross section rated 10 Amps**
	Unit Socket: IEC - 320 C13
BOOST HEATER UNITS	**Nominal 1.5 mm^2 cross section rated 16 Amps**
	Unit Socket: IEC - 320 C19

Always turn off the unit and disconnect the line cord from the power source before performing any service or maintenance procedures, or before moving the unit.

Always empty the bath before moving the unit.

Never operate equipment with damaged line cords.

Refer service and repairs to a qualified technician.

In addition to the safety warnings listed above, warnings are posted throughout the manual. These warnings are designated by an exclamation mark inside an equilateral triangle with text highlighted in bold print. Read and follow these important instructions. Failure to observe these instructions can result in permanent damage to the unit, significant property damage, personal injury or death.

Section II General Information

Description

The EX Series Bath Circulators are designed to provide temperature control for applications requiring a fluid work area or pumping to an external system.

The units consist of a circulation pump, stainless steel bath, a work area cover, and a temperature controller.

Specifications

	EX-111	EX-211
Temperature Range[1]	Ambient to +150°C	
Temperature Stability[2]	±0.01°C	
Pumping Capacity	15 lpm at 0' (0 M) 0 lpm at 16' (4.9 M)	
Heater *Watts* *50 Hz Models*	800 1000	
Bath Work Area (H x W x D) *Inches* *Centimeters*	4 3/4 x 8 x 6 12.1 x 20.3 x 15.2	9 1/4 x 10 x 6 23.5 x 25.4 x 15.2
Bath Volume *Gallons* *Liters*	1.9 7.0	3.2 12.3
Case Dimensions *(L x W x D)* *Inches* *Centimeters*	17 x 10 5/16 x 15 7/8 43.2 x 26.2 x 40.3	17 x 12 3/8 x 18 3/8 43.2 x 31.4 x 46.7
Power Requirements[3]	115 V, 60 Hz, 9 Amps 220/240 V, 50 Hz, 5.5 Amps	

1. Low end temperature with tap water cooling.
2. Stability is a function of the bath fluid temperature. The use of a work area cover and tap water cooling may optimize bath stability for your work.
3. Power Board Transformer Fuse– T 2.0A 250V (Qty 1) [T=Time Delay].

Specifications

	EX-221	EX-411	EX-511
Temperature Range[1]	Ambient to +150°C		
Temperature Stability[2]	±0.01°C		
Pumping Capacity	15 lpm at 0' (0 M) 0 lpm at 16' (4.9 M)		
Heater *Watts* *50 Hz Models*	800/800 boost 1000/800 boost	800 1000	800/800 boost 1000/800 boost
Bath Work Area *(H x W x D)* *Inches* *Centimeters*	 9 1/4 x 10 x 9 23.5 x 25.4 x 22.9	 19 1/4 x 10 x 6 48.9 x 25.4 x 15.2	 16 1/4 x 10 x 12 41.3 x 25.4 x 30.5
Bath Volume *Gallons* *Liters*	5.4 20.5	5.8 22.0	11.0 41.5
Case Dimensions *(L x W x D)* *Inches* *Centimeters*	 20 x 12 3/8 x 18 3/8 50.8 x 31.4 x 46.7	 17 x 12 3/8 x 28 3/8 43.2 x 31.4 x 72.1	 23 x 12 3/8 x 25 3/8 58.4 x 31.4 x 64.5
Power Requirements	115 V, 60 Hz, 16 Amps 220/240 V, 50 Hz, 10 Amps	115 V, 60 Hz, 9 Amps 220/240 V, 50 Hz, 5.5 Amps	115 V, 60 Hz, 16 Amps 220/240 V, 50 Hz, 10 Amps

1. Low end temperature with tap water cooling.
2. Stability is a function of the bath fluid temperature. The use of a work area cover and tap water cooling may optimize bath stability for your work.
3. Power Board Transformer Fuse- T 2.0A 250V (Qty 1) [T=Time Delay].

Section III Installation

Site



Never place the unit in a location where excessive heat, moisture, or corrosive materials are present.

Lift the unit by grasping under the case near the rubber feet. Locate the unit on a sturdy table or bench top. Ambient temperatures should be inside the range of +50°F to +80°F (+10°C to +27°C).

Electrical Requirements



Line voltage may be easily accessible inside the pump/control box. Always unplug the unit prior to removing pump/control box cover.

Refer to the serial number label on the rear of the unit to identify the specific electrical requirements of your unit.

Ensure the voltage of the power source meets the specified voltage, ±10%.

The unit construction provides extra protection against the risk of electric shock by grounding appropriate metal parts. The extra protection may not function unless the power cord is connected to a properly grounded outlet. It is the user's responsibility to assure a proper ground connection is provided.



For 220 - 240 volt units supplied without a line cord, use a harmonized (HAR) grounded 3-conductor cord, type H 0 5 V V - F , with conductors listed below. A suitable cord end is required for connecting to the equipment (see unit socket) and must terminate with an IEC approved plug for proper connection to power supply.

BOOST HEATER UNITS	**Nominal 1.5 mm² cross section rated 16 Amps**
	Unit Socket: IEC - 320 C19
NON-BOOST HEATER UNITS	**Nominal 1.0 mm² cross section rated 10 Amps**
	Unit Socket: IEC - 320 C13

Plumbing Requirements



Ensure the unit is off before connecting tubing to the unit.

Hose Connections

The pump connections are located at the rear of the pump box and are labelled PUMP INLET and PUMP OUTLET. These connections are bent upward so the recirculating fluid will drain back into the reservoir when the hoses are disconnected. Both connections are capped with stainless steel serrated plugs.

The pump lines have ¼ inch male pipe threads for mating with standard plumbing fittings. For your convenience stainless steel adapters, ¼ inch female pipe thread to ⅜ inch O.D. serrated fitting, are provided. (To assure proper fit, they should be installed using Teflon® tape around the threads.)

Flexible tubing, if used, should be of heavy wall or reinforced construction. Make sure all tubing connections are securely clamped. Avoid running tubing near radiators, hot water pipes, etc. If substantial lengths of tubing are necessary, insulation may be required to prevent loss of cooling capacity.

Tubing and insulation are available from NESLAB. Contact our Sales Department for more information (see Preface, After-sale Support).

It is important to keep the distance between the unit and the external system as short as possible, and to use the largest diameter tubing practical. Tubing should be straight and without bends. If diameter reductions must be made, make them at the inlet and outlet of the external system, not at the unit.

If substantial lengths of cooling lines are required, they should be pre-filled with bath fluid before connecting them to the unit. This will ensure that an adequate amount of fluid will be in the bath once it is in operation.

Pumping

The pump is designed to deliver a flow of 15 liters/minute (4 gallons minute) at 0 feet head. To prevent external circulation, the PUMP INLET and PUMP OUTLET lines on the rear of the unit are capped. The caps must be removed when external circulation is required.

To properly secure external hose connections to the unit, wrap teflon tape around the pipe line threads before installation. Once the hose connections are made, the hoses must be properly plumbed to an external system. *It is important the bath is not in operation until all plumbing is complete.*

If the bath is not used for external circulation, make sure the stainless steel caps are in place prior to operating the bath.

Circulating to an open container

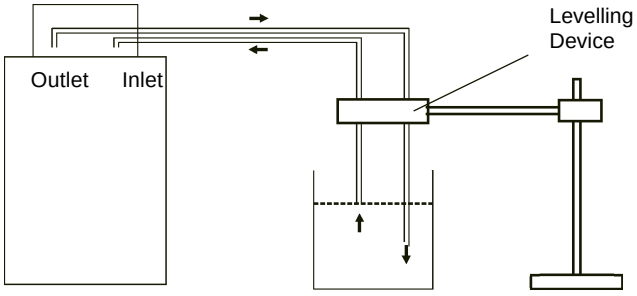

A stainless steel leveling device is available to aid circulation to an open vessel. Contact our Sales Department for more information (see Preface, After-sale Support).

Support the leveling device over the open container with a ringstand. Stagger the tubes in the leveling device so one tube is submerged in the vessel fluid, and the other tube is level with the fluid surface. Connect the deeper tube to the PUMP OUTLET and the shorter tube to the PUMP INLET.

Adjust the flow rate using the accessory flow control valve connected to the PUMP OUTLET, or by partially restricting the outlet tubing. When properly adjusted, the pump inlet will draw an occasional air bubble to prevent over flow, and the pump outlet will force fluid through the submerged tube to prevent aeration of the vessel.

To avoid siphoning the bath work area when the unit is shut off, lift the leveling device out of the vessel and above the level of the unit.

Circulating through two closed loops

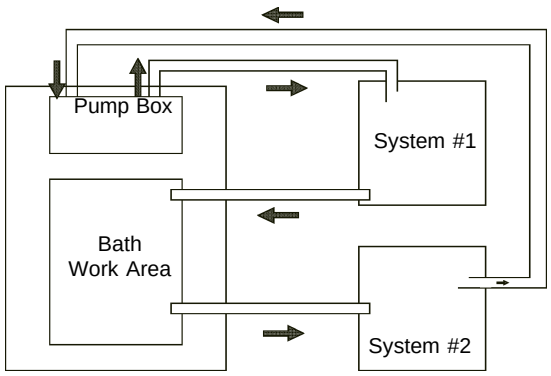

Bath (Top View)

The pump can be used to circulate through two closed loop systems. Connect the shortest practical length of flexible tubing from the PUMP OUTLET to the inlet of external system #1. Connect the outlet of system #1 directly into the bath work area. Connect tubing from the bath work area to the inlet of system #2. Connect the outlet of system #2 to the PUMP INLET.

Tap Water Cooling Coils

The unit is equipped with a cooling coil located behind the stainless steel baffle in the bath. The bath can be cooled and temperature stability improved by circulating cold fluid through the coil. For best results, the fluid should be a least 5°C below the temperature setpoint. The required fluid flow rate depends on the type of fluid, the setpoint, and the desired stability.

The plumbing connections for the cooling coil are 3/8 inch OD stainless steel tubes located on the rear of the unit. These connections will accept 3/8 inch or 5/16 inch ID tubing. Tubing is available from NESLAB.

Connect the COOLING COIL IN tube to the cold fluid source. Connect the COOLING COIL OUT tube to the cold fluid return (or drain if tap water is being used).

Drain



Ensure the temperature of the bath fluid is safe before draining the unit.

The unit is equipped with a drain located at the back of the unit at the base of the bath. The drain has ¼ inch male pipe threads and is capped with a stainless steel plug. To drain the reservoir simply remove the cap.

To assure proper fit when replacing the cap, be sure to line the threads with Teflon® tape.

Fluids



Never use flammable or corrosive fluids with this unit.

Tap water is the recommended fluid for operation from +8°C to +80°C.

Above +80°C, the user is responsible for fluids used.



Never use pure ethylene glycol as a bath fluid. A minimum 80/20 mixture of Ethylene Glycol and tap water is allowed.

Filling Requirements

The bath work area has a high and low level marker to guide filling. The markers are 1 inch horizontal slits located in the center of the stainless steel baffle separating the work area and the pump assembly. The correct fluid level falls between these two markers. The heating coils will be exposed and may become damaged if the correct fluid level is not provided.

When pumping to an external system, keep extra fluid on hand to maintain the proper level in both the circulating lines and the external system.



Never run the unit when the work area is empty.

Section IV Microprocessor Controllers

Microprocessor Controller

Description

The microprocessor controller is designed as a separate component from the unit. The controller can be mounted directly on the pump box, or remotely from the bath. The controller provides proportional with integral and derivative (PID) control.

The controller has two sections. The upper section contains the LED indicators and the Main display which provide feedback to you about the controller and bath. The ten individual LED indicators provide output on selected parameters while the Main display will provide information on various unit conditions.[1] The lower section contains the keypad you use to input data to the controller.

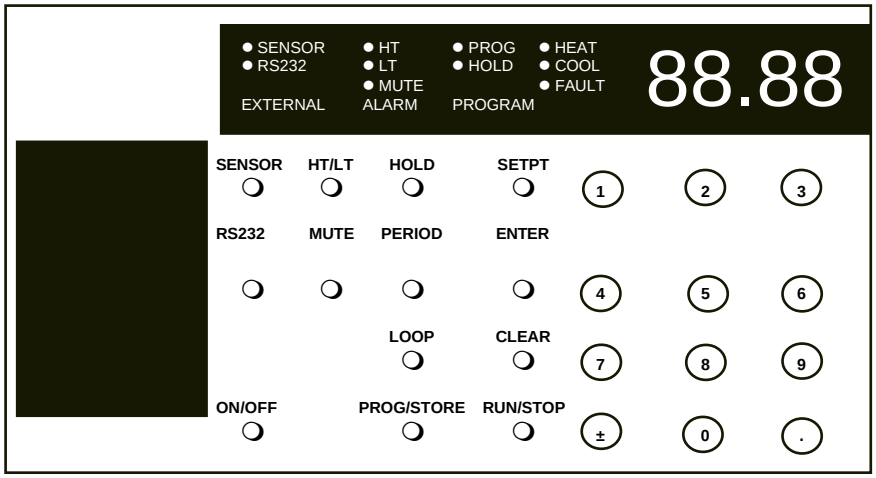

Microprocessor Temperature Controller (Front View)

Controller Mounting

The controller can be removed from the bath and placed in a remote location. Extension cables are available from NESLAB. Contact our Sales Department for more information.

Controller Connection

Microprocessor controllers are supplied with a cable needed to connect the controller to the pump box. Connect the cable to the 25-pin male connector on the control box and the female connector on the pump box. Once the connection is made, the unit is ready for operation.

NOTE: The MAIN POWER should be OFF before connecting/disconnecting cables from the control box.

1. The COOL LED is applicable only to refrigerated uits.

LED Indicators

The following table explains the controller LED indicators. The LEDs can be on, off or flashing.

LED	STATUS	INDICATION
SENSOR	OFF	All controller functions are operating from the unit's internal probe.
	ON	All controller functions are operating from remote sensor input.
	FLASHING	The Main display indicates the remote sensor temperature. The controller, however, still uses the internal probe to control the bath temperature.
RS232	OFF	Communication port disabled.
	ON	Communication port enabled.
	FLASHING	Awaiting next key press
LT	OFF	No alarm.
	ON	Main display indicates low limit setpoint.
	FLASHING	Low limit alarm condition.
HT	OFF	No alarm.
	ON	Main display indicates high limit setpoint.
	FLASHING	High limit alarm condition.
HOLD	OFF	Programming hold feature disabled.
	ON	Programming hold feature enabled.
PROG	OFF	No program running.
	ON	The program is suspended[1].
	FLASHING	The program is running.
COOL[2]	OFF	Refrigeration is off.
	ON	Refrigeration is on.
HEAT	OFF	The heater is off.
	ON	The heater is on.
	FLASHING	The heater duty cycle.
MUTE	OFF	The alarm is enabled.
	ON	The alarm horn is disabled.
	FLASHING	The alarm horn has been disabled for any current condition. The alarm horn will automatically reset when the condition is cleared.
FAULT	OFF	No fault condition.
	ON	The high temperature/low level safety has activated.

1.The bath fluid will maintain he setpoint achieved at the time the program is suspended. No operator inputs are available to the controller while in a suspended condition.

2.The COOL LED is applicable only to refrigerated units.

Start Up

Before starting the unit, check all electrical and plumbing connections and make sure the work area has been properly filled with bath fluid.

NOTE: The fluid level should be between the two lateral slots at the rear of the reservoir.

To power the controller on 115V units, place the MAIN POWER switch on the side of the unit to the ON position. This only supplies power to the controller. *The unit itself is not operating.* The Main display on the controller will display OFF.

220V units have a circuit breaker instead of a switch. The circuit breaker is labeled **I** (power on) and **O** (power off). Ensure the circuit breaker is in the **I** position.

Press the keypad ON/OFF button on the controller. The pump will start and the Main display will indicate the temperature of the fluid in the bath. The controller will respond to the current setpoint.

Pressing the keypad ON/OFF button again will disable control of the bath and shut down the pump. The Main display will indicate OFF. (When the controller is in the RS232 mode of operation, see page 13, the ON/OFF button is deactivated. Control of the bath can only be disabled via an RS232 input.)

Temperature Adjustment

To display the temperature setpoint, press SETPT. The Main display will flash the current setpoint. Press ENTER to return the display to the bath's fluid temperature. To adjust the setpoint press SETPT and then press CLEAR, the display will go blank. Use the keypad to input the desired value. If the value is correct press ENTER. If the value is incorrect press CLEAR, the display will go blank. Use the keypad to correct the value and press ENTER.

Low and High Temperature Limits

To display the temperature limits, press HT/LT. Either the HT or LT LED will illuminate and the Main display will flash the corresponding temperature limit. Press ENTER and then press HT/LT again to observe the other temperature limit. The corresponding LED on the controller will illuminate. Should either limit be exceeded an alarm will sound (if not muted) and the corresponding LED will flash.

To adjust either limit, press HT/LT and then press CLEAR, the display will go blank. Use the keypad to input the desired value. If the value is correct press ENTER. If the value is incorrect press CLEAR, the display will go blank. Use the keypad to correct the value and press ENTER. Use the LT or HT LED indicators to verify which temperature limit you are changing.

Alarm/External Functions

Mute Alarm

The alarm audio may be permanently silenced by pressing MUTE, and then immediately (within one second) pressing HOLD. The MUTE LED will now stay lit. To restore the audio, press MUTE and then immediately (within one second) press CLEAR. The MUTE LED will extinguish.

If desired, you may mute the audible portion of an alarm for an existing condition. Press MUTE on the temperature controller. The MUTE LED flashes to indicate a muted alarm horn. The MUTE button acts as a toggle switch to activate/deactivate the alarm horn. The appropriate HT or LT LED will continue to flash during the alarm condition. If the alarm is muted for an existing condition it will automatically reset once the temperature limit problem is corrected. The alarm will resound if a limit is exceeded another time unless MUTE is pressed again.

Sensor

The controller has the capability to enable and/or monitor a remote bath's temperature sensor. (Remote sensor probes of various sizes are available from NESLAB. Contact our Sales Department for more information.) Pressing SENSOR, when a remote sensor is properly connected to the controller's 9-pin SENSOR connector, will display the remote sensor's temperature on the Main display. The SENSOR LED will flash. *The controller and alarm, however, will continue to respond to the signals from the unit's internal probe.*

To completely transfer all display, control and alarm functions to the remote sensor, press SENSOR and then press ENTER. The SENSOR LED will stay lit. The controller will not respond to the signal from the unit's internal probe.

To disable the remote sensor press SENSOR and then press CLEAR. The SENSOR LED will extinguish. All display and alarm functions will again respond to the signal from the unit's internal probe.

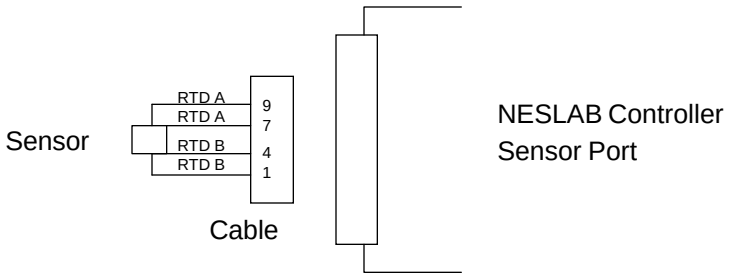

RS232

The unit can be controlled through your computer's serial port by using a standard 9-pin RS232 connection on ther rear of the temperature controller. For complete information see Appendix A.

Program Functions

Programming

The microprocessor controller can store up to 8 temperature programs, each one having up to 15 program steps (16 setpoints). You can select, enter or run one program at a time. The procedure for selecting a program is discusssed in Program Control on page 15. The programs can cover the unit's full temperature operating range in 0.01°C increments. Step times can vary from 0 to 6,500 minutes in 0.1 minute increments. Each program can be set up to run as many as 9999 repetitions (LOOPS).

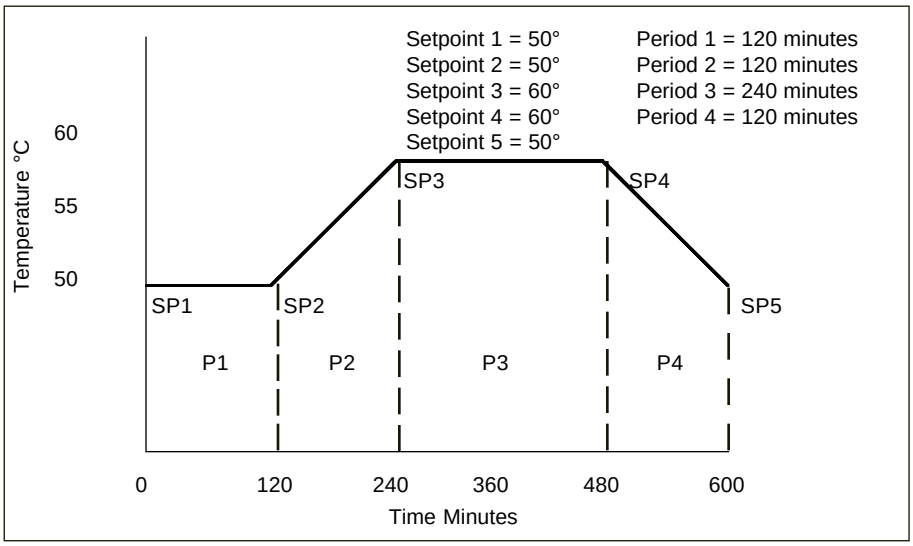

Typical Program

The controller can store all programs in its nonvolatile memory, see Program Control on page 16.

The programming process begins with program definition. Define your program as a series of setpoints with a known period of time interval between each of them. Each interval is one step of the program. Give careful attention to the first part of your program. What conditions must exist at the beginning of your process? For example, you may wish to program an initial period of constant temperature to allow for thermal stabilization.

When a program is started, it begins immediately at the initial program setpoint.

Consider the unit’s limitations when designing programs. Temperature or time parameters which exceed the performance capabilities of the bath will result in unsatisfactory operation. It is possible to create a program calling for very rapid changes in temperature. Although the equipment may not be capable of producing such changes, it may be practical to program such steps as a way to cause the fastest *possible* temperature change.

Loops

This option allows for automatic repetition(s) of a program. For example, set the number of loops to three. Once the program reaches the last setpoint, it will loop back to the first setpoint and run the program again. In this instance the program will loop back three times. The entire program will run a total of four times. The maximum number of loops is 9999.

Hold

This option determines what will happen at the end of a program. In the hold mode of operation the setpoint will remain at the final temperature when the program is completed. Without hold the setpoint will return to the starting setpoint when the program is completed. The setpoint may change abruptly, but the fluid temperature will respond as quickly as the system's heating and cooling capacity allows.

The procedures for placing the controller in the hold mode is discussed in Program Control on page 16.

Current Values

While a program is running, the program selected, current period, current setpoint, time remaining for the current step, or the current loop, may be viewed on the Main display. Momentarily depress the appropriate key listed below to view the desired parameter. After several seconds, the Main display will again indicate the temperature of the bath fluid.

SETPT	View Current Setpoint
LOOP	View Current Loop
PERIOD	Time Remaining in Current Period
PERIOD PERIOD	Current Period Number
+/- followed immediately by **PROG/STORE**	Selected Program Number

Assured Soak

This option is used when you need to ensure the bath temperature will reach the next setpoint (regardless of time) before moving onto the next period.

This option is controlled by a DIP switch on the rear of the controller. Turn DIP switch number seven (7) to the ON position to enable this feature.

Period Adjust

This option is used to skip the current period of a running program. See Table 13 on page 18 for the appropriate procedure. **NOTE:** If Assured Soak is activated, the bath *must* reach that setpoint before the program will continue.

Program Control

The following tables show how to use the keypad and Main display to program the controller.

Use Table 1 to select one of the eight programs to be the current program for either entering or running.

TABLE 1

Keypad input	Main Display	Comments
+/-	Current bath temperature	
-PROG/STORE[1]	**Pro** followed by the program number	Enter desired program number.
-ENTER	Current bath temperature	

1. PROG/STORE must be depressed immediately (within one second) after +/-.

Once Table 1 is complete, use Table 2 for entering and storing a two-setpoint program. You would follow this procedure for programming any number of setpoints (up to the 16 setpoint maximum).

TABLE 2

Keypad input	Main Display	Comments
-PROG/STORE	**- - - - - -**	If YES appears you should clear the current program (see Table 10).
-SETPT	**SP-1**	Input setpoint.
-ENTER	Desired setpoint	
-PERIOD	**P-1**	Input time in minutes.
-ENTER	Desired time	
-SETPT	**SP-2**	Input setpoint.
-ENTER	Desired setpoint	
-LOOPS	**LOOPS**	Input number of loops
-ENTER	Desired number of loops	
-PROG/STORE	**FILE?**	
-ENTER	Current bath temperature	

Use Table 3 to abort programming at any time.

TABLE 3

Keypad input	Main Display	Comments
-ENTER	**- - - - -**	
-PROG/STORE	**FILE?**	
-CLEAR	Current bath temperature	

Use Table 4 to scroll through a two-setpoint stored program. You would use this procedure for scrolling any number of setpoints (up to the 16 setpoint maximum).

TABLE 4

Keypad input	Main Display	Comments
-PROG/STORE	**YES**	
-ENTER	**SP-1** followed by actual value	
-ENTER	**SP-2** followed by actual value	
-ENTER	**P-1** followed by actual value	
-ENTER	**LOOPS** followed by actual value	
-ENTER	Current bath temperature	

Use Table 5 to abort scrolling through a program at any time.

TABLE 5

Keypad input	Main Display	Comments
-PROG/STORE	**FILE?**	
-ENTER	Current bath temperature	

Once Tables 1 and 2 are complete, use Table 6 to run a stored program.

TABLE 6

Keypad input	Main Display	Comments
-RUN/STOP	Current bath temperature	**PROG LED** will flash.

Use Table 7 to stop a running program.

TABLE 7

Keypad input	Main Display	Comments
-RUN/STOP	Current bath temperature	**PROG LED** will stay on steady.
-CLEAR	Current bath temperature	**PROG LED** extinguishes.

Use Table 8 to temporarily suspend a running program.

TABLE 8

Keypad input	Main Display	Comments
-RUN/STOP	Current bath temperature	**PROG LED** stays on steady.

Use Table 9 to resume a suspended program.

TABLE 9

Keypad input	Main Display	Comments
-RUN/STOP	Current bath temperature	**PROG LED** flashes.

Use Table 10 to clear a stored program.

TABLE 10

Keypad input	Main Display	Comments
-PROG/STORE	**YES**	
-PROG/STORE	**FILE?**	
-CLEAR	Current bath temperature	

Use Table 11 to add HOLD operation. (Hold must be established before running a program. The hold function is not part of the stored program.)

TABLE 11

Keypad input	Main Display	Comments
-PROG/STORE	**YES**	
-HOLD	**YES**	**HOLD** LED stays on steady.
-PROG/STORE	**FILE?**	
-ENTER	Current bath temperature	

Use Table 12 to clear hold operation.

TABLE 12

Keypad input	Main Display	Comments
-PROG/STORE	**YES**	
-HOLD	**YES**	**HOLD** LED extinguishes.
-PROG/STORE	**FILE?**	
-ENTER	Current bath temperature	

Use Table 13 to force a running program to skip ahead to the next period.

TABLE 13

Keypad input	Main Display	Comments
+/-	Current bath temperature	
-PERIOD[1]	**P-Adj**	(Period adjust)

1. PERIOD must be depressed immediately (within one second) after +/-.

Error Messages

The Main LED will indicate an error message for eight different conditions.

Error1 - Program incomplete or illogical. Re-enter the program.

Error2 - Period entered exceeds 6,500 minutes. Reenter a period.

Error3 - Entered value exceeds allowable limits. Reenter proper value.

Error4 - Loops entered greater than 9,999. Reenter loops

Error5 - Attempted to run a program without a program in memory. Build a program.

Error6 - No period entered for a program. Enter a period.

Error7 - With alarm - SENSOR depressed without a sensor properly connected to controller. Properly connect a sensor. (If sensor is properly connected the sensor may have failed.) Without alarm - Internal probe failure, unit will shut off.

Error8 - Internal nonvolatile memory has failed. Press ENTER for the controller to reinitialize nonvolatile memory to factory preset parameters. **NOTE:** This will erase any program and setpoints in nonvolatile memory. The unit will have to be recalibrated.

Miscellaneous

Additional Parameters

Two parameters can also be set while the controller is deactivated (Main display shows OFF). You can adjust the light intensity of the Main display and set the controller pushbuttons to "beep" or not when depressed.

To adjust the Main display intensity first press the "±" key on the controller keyboard. Repeatedly depress the "1" key to decrease intensity or the "3" key to increase. Each press changes the intensity an incremental amount. Once the desired intensity is displayed press ENTER.

To silence the "beep" first press the "." key. Press "0" to turn the beep off or press "1" to turn it on. Next, press ENTER.

DIP Switches

Three DIP switches on the rear of the controller are operational. Switch #1 controls the temperature scale. OFF (up position) displays the temperature in °C, ON (down position) displays the temperature in °F.

Switch #6 sets the display update rate the controller uses to display temperature. This will determine how sensitive the display will be to temperature fluctuations. OFF (up position) sets a fast rate, ON (down position) sets a slow rate. (OFF causes more fluctuations than ON.)

Switch #7 controls the assured soak option for programs. ON enables assured soak.

PID Control

PID controllers are best suited for systems that may experience changing heat loads. Proportional control is combined with Integral and Derivative adjustments which allow the controller to automatically compensate for any changes from the setpoint. You may have to experiment with the PID settings to find out which are most suitable to your application.

To change or view any of the PID settings the controller must be operating.

To change or view the proportional band, press "1" and immediately, within one second, press ENTER. The "percent of span" value will flash on the Main display. Press ENTER to accept the value. To change the value press CLEAR and then enter the desired value. Press ENTER to exit this mode.

To change or view the Integral, press "2" and and immediately, within one second, press ENTER. The "repeats per minute" value will flash on the Main display. Press ENTER to accept the value. To change the value press CLEAR and then enter the desired value. Press ENTER to exit this mode.

To change or view the Derivative, press "3" and and immediately, within one second, press ENTER. The "minutes" value will flash on the screen. Press ENTER to accept the value. To change the value press CLEAR and then enter the desired value. Press ENTER to exit this mode.

Restoring Factory Preset Values

To restore the factory preset values hold the "0" button on the keypad and turn the Main Power switch on the side of the unit to the ON position. Release the "0" button and the Main display will indicate OFF. The following preset values will be installed:

P =0.6%
I =0.25 repeats per minute
D =0.05 minutes

In addition, the following values will be preset

BAUD Rate	=9600
Stop bits	=1
Data Bits	=8
Parity	=none

Calibration

The microprocessor controller has three different modes of calibration: Self-Cal, Two-point, and One-point. The controller is shipped from the factory with a Two-point calibration so no additional controller calibration may be required. Both the internal probe and the remote sensor input must be independently calibrated. Different calibration modes for each probe can be used if desired. The remote sensor input has been Self-Calibrated at the factory.

Self-Cal is used to initialize the analog-to-digital (A/D) converter input channel before performing the other types of calibrations. This mode removes all previous calibrations and brings the measurement error to less than 2°C. If this is the required accuracy, then no additional calibration is needed.

Two-point calibration is used to negate A/D and probe errors over the full span of the controller. This type of calibration is performed when high accuracy is desired.

One-point calibration (offset) is used to make the controller very accurate at one specific operating temperature.

One-point Calibration can be performed after a Two-point calibration as many times as desired. Each One-point calibration adds a different offset to the original Two-point calibration data (if one was already performed).

Calibration Procedures

Note: The controller should be powered at least 15 minutes before calibration to assure the electronic circuits are at operating temperature. To perform One and Two-point calibrations on the remote sensor input the unit must be in the remote sensor mode. Messages will end with CAL 1 for internal probe calibrations and CAL 2 for remote sensor calibrations.

Self-Cal: The controller must be deactivated (displaying OFF) to access this mode. Press SETPT followed by ENTER to Self-Cal the internal probe input. The message “S-CAL 1” will be followed by “done”. To Self-CAL the sensor input press SENSOR followed by ENTER. The message “S-CAL 2” followed by “done” will be displayed.

Two-point: For high accuracy measurements the controller input can be calibrated at two points. These two points (one high, one low) should be as far apart as practical for good performance.



Do not pick points that are outside the safe operating limits of the fluid in your application. For example with a water bath, 5°C and 90°C would be typical calibration points.

Before a Two-point cal, Self-cal must be performed on the desired sensor input.

With the controller on and measuring from the internal or remote probe, depending on which sensor is being calibrated, set the controller setpoint to the desired high cal temperature. When the bath reaches the setpoint and stabilizes, measure the actual bath temperature with an external calibrated thermometer. Press in quick succession “2” “.” “ENTER”. The message H-CAL # will appear followed by the flashing setpoint. Now enter in the actual bath temperature as measured by the calibrated thermometer and press ENTER. The Main display will indicate the temperature of the bath fluid (the calibrated temperature will not appear until the next step is complete).

Next set the controller setpoint to the desired low cal temperature. When the bath reaches this setpoint and stabilizes, measure the actual bath temperature with an external calibrated thermometer. Press in quick succession “2” “.” “ENTER”. The message L-CAL # will appear followed by the flashing setpoint. Now enter in the actual bath temperature as measured by the calibrated thermometer and press ENTER. The Main display will now indicate the calibrated temperature of the fluid in the bath.

One-point: Before a One-point cal, Self-cal or Two-point cal must be performed on the desired sensor.

With the controller on, and measuring from the internal or remote probe, depending on which sensor is being calibrated, set the controller setpoint to the desired temperature. When the bath reaches this setpoint and stabilizes, measure the actual bath temperature with an external calibrated thermometer. Press in quick succession “1” “.” “ENTER”. The message 1-CAL # will appear followed by the flashing setpoint. Now enter in the actual bath temperature as measured by the calibrated thermometer and press ENTER. The display will now show the calibrated temperature and all temperatures will have this offset added to them.

Calibration clear: At any point the calibration data from a One or Two-point cal can be erased by quickly pressing “2” “.” “CLEAR”. This procedure clears the calibration data only for the selected probe.

High Temperature/ Low Liquid Level Safety

To protect your application, the adjustable High Temperature/Low Liquid Level Safety (HIGH TEMP/LOW LEVEL) ensures the heater will not exceed temperatures which can cause serious damage to your unit. A single temperature sensor, located on the heater coils in the bath, monitors both conditions. A High Temperature/Low Liquid Level fault occurs when the temperature of the sensor exceeds the set temperature limit.

In the event of a fault, the unit will shut down. The cause of the fault must be identified and corrected before the unit can be restarted.

The safety on single heater systems is not preset and must be adjusted during initial installation.

Units with a boost heater have an additional nonadjustable safety located behind the main safety. It has a red reset button but no adjustment knob.

To set the safety, locate the HIGH TEMP/LOW LEVEL SAFETY adjustment dial on the right side of the pump box. Turn the dial fully clockwise and press the red RESET switch. The RESET switch is located NEXT TO the adjustment dial. **NOTE:** For units without a reset switch turn the power switch off and then back on.

Start the unit. Adjust the setpoint for a few degrees higher than the highest desired fluid temperature and allow the bath to stabilize at the temperature setpoint. Turn the HIGH TEMP/LOW LEVEL SAFETY dial counter-clockwise until you hear a click and the unit shuts down. The red FAULT LED on the temperature controller will light to indicate a fault has occurred.

NOTE: The minimum high temperature safety setting is 50°C. For units without a reset switch the temperature range is 0°C to 180°C.

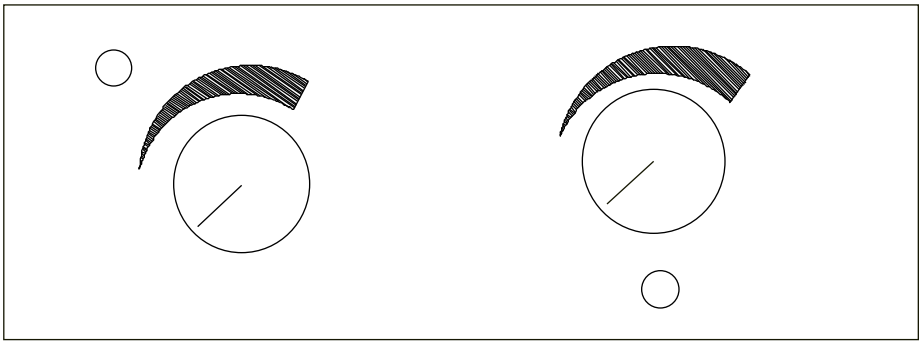

High Temperature/Low Liquid Level Safety
(Some units do not have a rese switrch.)

Section V Maintenance



To avoid electrical shock, disconnect the mains cord prior to removing any access panels or covers.

Service Contracts

NESLAB offers on-site Service Contracts that are designed to provide . extended life and minimal down-time for your unit. For more information, contact our Service Department (see Preface, After-sale Support).

Reservoir Cleaning

Routine cleaning can be achieved by simply sponging down the seamless stainless steel tank with tap water. (Dish washing detergent may be used but the tank must be thoroughly rinsed.)

To gain access to the entire reservoir the pump box and reservoir cover should be removed.

Remove the line cord from the rear of the unit.

Remove the four screws securing the reservoir's cover.

Carefully raise the controller and cover assembly to remove it from unit.

Place the cover on its side.

Algae

To restrict the growth of algae in the bath, we recommend the bath cover be kept in place and that all circulation lines be opaque. This will eliminate the entrance of light required for the growth of most common algae.

NESLAB recommends rthe use ofChloramine-T, one gram per gallon.

Section VI Troubleshooting

Checklist

Unit will not start

Make sure the voltage of the power source meets the specified voltage, ±10%. Refer to the serial number label on the rear of the unit to identify the specific electrical requirements of your unit.

Check the High Temperature/Low Liquid Level Safety. If the FAULT light is on, make sure the fluid level in the bath is between the marks in the baffle and the HIGH TEMP/LOW LEVEL SAFETY setting is greater than the fluid temperature. Push the RESET switch(es), or, for units without a reset switch, turn the power switch off and then back on and attempt to restart.

No external circulation

Make sure the stainless steel plugs on the PUMP INLET and PUMP OUTLET have been removed.

Check for obstructions, kinks, or leaks in the circulation tubing.

Circulation will cease when the pump head has been exceeded.

No communication between bath's microprocessor and your computer

Ensure the bath's microprocessor parameters (baud rate, parity etc.) match your computer requirements.

Ensure the RS-232 light is on steady. See page 13 for details. **NOTE:** You cannot input data from the keypad when the RS-232 mode is enabled.

Check the cable. The microprocessor reads data on pin 2 and transmit data on pin 3. Ensure the cable is correctly connected. Computer 25-pin and 9-pin communication ports usually have different conventions.

Ensure the only pins connected to the microprocessor are 2, 3 and 5. All other pins must *not* be connected.

Continued on next page.

No communication between bath's microprocessor and your computer
Ensure the bath's microprocessor parameters (baud rate, parity etc.) match your computer requirements.

Ensure the RS-232 light is on steady. See page 13 for details. **NOTE:** You cannot input data from the keypad when the RS-232 mode is enabled.

Check the cable. The microprocessor reads data on pin 2 and transmit data on pin 3. Ensure the cable is correctly connected. Computer 25-pin and 9-pin communication ports usually have different conventions.

Ensure the only pins connected to the microprocessor are 2, 3 and 5. All other pins must *not* be connected.

Keypad locked up
If necessary, remove computer cable. Turn off the bath using the main power switch on the side of the unit. While holding the "0" button on the keypad, turn the unit back on. The Main Display will read OFF.

This will also restore the factory preset PID values and also reset the communication parameters and buffer. See Restoring Factory Preset Values on page 20.

Service Assistance and Technical Support

If, after following these troubleshooting steps, your unit fails to operate properly, contact our Customer Service Department for assistance (see Preface, After-sale Support). Before calling, please obtain the following information:

Part number
Serial number
Voltage of unit
Voltage of power source

In addition to arranging warranty service, our Service Department can provide you with a wiring diagram and a complete list of spare parts for your unit. Before calling, please obtain the following information:

Part number
Serial number

Appendix A RS-232

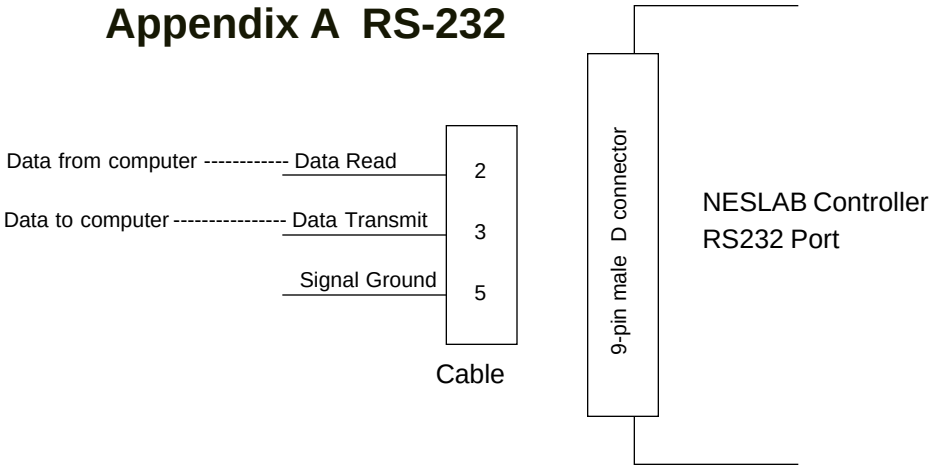

The unit can be controlled through your computer's serial port by using a standard 9-pin RS232 connection on the rear of the temperature controller. Data transmit of the serial port connects to data read (pin 2) of the bath. Data read of the serial port connects to the data transmit (pin 3) of the bath.

NOTE: Do not use a cable that connects to the unused pins on the bath communications port. This may cause a communication fault. Communication cables are available from NESLAB. Contact our sales department for additional information.

With a cable properly connected to the controller press RS232, the RS232 LED will start to flash. Press ENTER while the LED is flashing and the RS232 LED will come on steady indicating your computer's serial port can control the unit's operation.

In this mode of operation you cannot manually input data with the keypad. You can, however, observe the setpoint and/or alarm temperature limits by pressing the appropriate button on the controller. Your computer can be used to operate all modes of operation.

Communication Commands

All commands must be entered in the exact format shown in the following four tables. Do not send a [LF] (line feed) after the [CR]. Ensure the specified letter case is used. The tables on the next few pages show all commands available, their format and responses. Controller responses are either the requested data, an exclamation point (!) if the command was properly executed, or a question mark (?) if the controller could not execute the command. A question mark response indicates either an improper command format or an attempt to enter settings that are outside the allowable range. The controller response *must* be received before sending the next command.

NOTE: All responses from the bath are terminated with a single [CR] only. Wait for your computer to respond before sending the next command.

If you are using the NESLAB DeltaTemp communication software you must set up the bath controller for: 300 baud, 8 data bits, 2 stop bits and no parity. The bath controller will only support the programming features of DeltaTemp and will ignore the various output controls.

TABLE 1 GENERAL COMMANDS

Command Echo Echo: i = 1, No echo: i = 0 (control returns commands)	SEi[CR]
Set Setpoint -30.00 to +150.00°C or -22.00 to +300.00°F	SSxxx.xx[CR]
Read Setpoint	RS[CR]
Read Main Probe Temperature	RT[CR]
Read Remote Probe Temperature	RR[CR]
Turn Control On or Off On: i = 1, Off: i = 0	SOi[CR]
Set Power Status Flag Set: i = 1, Reset i = 0 (reset when controller power is lost)	SWi[CR]
Read Power Status Flag	RW[CR]
Read F or C Units	RU[CR]

TABLE 2 ALARM COMMANDS

Set High Alarm Limit Same range as setpoint	SHxxx.xx[CR]
Read High Alarm Limit	RH[CR]
Set Low Alarm Limit Same range as setpoint	SLxxx.xx[CR]
Read Low Alarm Limit	RL[CR]
Read Alarm Status Returns: 0 = no alarm, 1 = alarm	RF[CR]

TABLE 3 CONTROL COMMANDS

Set Proportional Bandwidth 0.10 to 10.00 % of full scale	SPxx.xx[CR]
Read Proportional Bandwidth	RP[CR]
Set Integral Compensation 0.00 to 10.00 repeats/minute	SIxx.xx[CR]
Read Integral Compensation	RI[CR]
Set Derivative Compensation 0.00 to 1.00 minutes	SDx.xx[CR]
Read Derivative Compensation	Rd[CR]
Main/Remote Probe Selection Main: i = 0, Remote: i = 1	Sri[CR]
Boost Heater Inhibit Inhibit: i = 0, Enable: i = 1	SBi[CR]

TABLE 4 PROGRAMMING COMMANDS

Set Step Setpoint n = step number	SYn,xxx.xx<[CR]
Read Step Setpoint	RYn[CR]
Set Step Period n = step number	SXn,xxx.xx[CR]
Read Step Period	RXn[CR]
Read Number of Steps	Rs[CR]
Set Number of Loops 0 to 9999 additional loops after first program execution	SKxxxx[CR]
Read Number of Loops	RK[CR]
Set Hold Status Hold: i = 1, No hold: i = 0	SZi[CR]
Pause/Resume Program Resume: i = 1, Pause: i = 0	SGi[CR]
End Program	SR[CR]
Read Elapsed Step Time	RE[CR]
Select Program Number	SVx[CR]
Read Selected Program Number	RV[CR]
Read Current Period	RC[CR]
Skip Ahead One Period	SJ[CR]

To set the communications data format the controller must be deactivated (Main display indicates OFF). Press the RS232 button. The word "Baud" will momentarily appear followed by the current baud rate (9600, 4800, 1200, 600 or 300). Use the keypad to enter the desired change, if any. Press ENTER and "db" will momentarily appear followed by the current number of data bits setting. Again, use the keypad to enter any desired change (7 or 8) and then press ENTER. "Sb" will momentarily appear followed by the current number of stop bits (1 or 2). Change, if needed, and press ENTER and "PAr" will momentarily appear followed by the current parity control setting (0 = none, 1 = odd, 2 = even). Change, if needed, and press ENTER.

To manually exit this mode of operation press RS232. The RS232 LED will start to flash. Press the CLEAR button and the RS232 LED will extinguish.

Communication Command Protocol

The following table lists the communication command protocol for programming the controller via a computer.Use the Ctrl - C key combination to clear the controller receiving buffer if an erroneous character is detected.

FUNCTION	SYNTAX[1]	RETURN MESSAGE[2]
SET SETPOINT	SSxxx.xx[CR]	![CR]
SET LOW LIMIT	SLxxx.xx[CR]	![CR]
SET HIGH LIMIT	SHxxx.xx[CR]	![CR]
SET PROPORTIONAL BAND[3]	SPxx.xx[CR]	![CR]
SET INTEGRAL[4]	SIxx.xx[CR]	![CR]
SET DERIVATIVE[5]	SDx.xx or Sdx.xx[CR]	![CR]
BOOST HEATER INHIBIT	SBi[CR]	![CR]
SET POWER STATUS FLAG	SWi[CR]	![CR]
SET ON/OFF	SOi[CR]	![CR]
SELECT PROGRAM NUMBER	SVx[CR]	![CR]
SET STEP SETPOINT	SYn,xxx.xx[CR]	![CR]
SET STEP PERIOD	SXn,xxx.x[CR]	![CR]
SET NUMBER OF PERIODS	Ssn[CR]	![CR]
SET NUMBER OF LOOPS	SKxxxx[CR]	![CR]
SET HOLD STATUS	SZi[CR]	![CR]
END PROGRAM	SR[CR]	![CR]
ECHO CONTROL[6]	SEi[CR]	![CR]
REMOTE SENSOR CONTROL	Sri[CR]	![CR]
SUSPEND/RESUME PROGRAM	SGi[CR]	![CR]
SKIP AHEAD ONE PERIOD	SJ[CR]	![CR]
READ SETPOINT	RS[CR]	xxx.xx[CR]
READ TEMPERATURE	RT[CR]	xxx.xx[CR]
READ ALARM STATUS	RF[CR]	![CR]
READ REMOTE TEMPERATURE	RR[CR]	xxx.xx[CR]
READ UNITS	RU[CR]	C[CR] or F[CR]
READ CURRENT PERIOD	RC[CR]	xx[CR]
READ ELAPSED TIME	RE[CR]	xxx.x[CR]
READ LOW LIMIT	RL[CR]	xxx.xx[CR]
READ HIGH LIMIT	RH[CR]	xxx.xx[CR]
READ PROPORTIONAL BAND	RP[CR]	xx.xx[CR]
READ INTEGRAL	RI[CR]	xx.xx[CR]
READ DERIVATIVE	Rd[CR]	x.xx[CR]
READ PROGRAM NUMBER	RV[CR]	x[CR]
READ STEP SETPOINT	RYn[CR]	xxx.xx[CR]
READ STEP PERIOD	RXn[CR]	xxx.x[CR]
READ NUMBER OF STEPS	Rs[CR]	x[CR]
READ NUMBER OF LOOPS	RK[CR]	xxxx[CR]
READ POWER STATUS	RW[CR]	x[CR]

1. x = ASCI digit, i = 0 (OFF or STOP) i = 1 (ON or GO), n = step number.
2. Ensure the return message is correct. If not, resend or troubleshoot communication lines.
3. Factory preset at 0.6%.
4. Factory preset at 0.25 repeats per minute.
5. Factory preset at 0.05 minutes.
6. Allows computer to compare send signal to receive signal.

Remote Programming

The bath can be programmed and controlled by a remote computer. Enter step setpoints using the SYn command, time periods using the SXn command, number of loops using the SKxxxx command and number of periods in the program using the Ssn command. Start the program using SG1 and suspend the program using SG0. When the program is finished it will stop automatically. If needed, SR will end the program at any time. Here is a four setpoint, two loop example:

SV1[CR]	Select program number one
SY1,25.00[CR]	First setpoint = 25.00 degrees
SX1,20.0[CR]	First period = 20.0 minutes
SY2,40.00[CR]	Second setpoint = 40.00 degrees
SX2,60.0[CR]	Second period = 60.0 minutes
SY3,40.00[CR]	Third setpoint = 40.00 degrees
SX3,45.0[CR]	Third period = 45.0 minutes
SY4,25.00[CR]	Fourth setpoint = 25.00 degrees
Ss3[CR]	Program has three periods
SK2[CR]	Execute the program three times total
SG1[CR]	Begin executing program
SG0[CR]	Temporarily suspend the program
SR[CR]	Stop the program before it is finished

Blank page.

Appendix B

International Quick Reference Guides

EX mikroprozessorgesteuert Kurzbedienungsanleitung

Installation
Stellen Sie das Gerät auf einen stabilen Tisch oder Labortisch. Die Umgebungstemperatur sollte zwischen +10 °C und +27 °C liegen.

Vergewissern Sie sich, daß die Spannung Ihrer Stromanschlüsse mit der für das Gerät vorgesehenen Spannung übereinstimmt (± 10%).

Die Schlauchanschlüsse (1/4 Zoll MPT) des Gerätes befinden sich an der Rückseite und sind mit PUMP INLET und PUMP OUTLET bezeichnet. Entfernen Sie die Kappen, falls externe Zirkulation gewünscht wird. Schließen Sie den PUMP OUTLET-Anschluß an den Eingang Ihres Instruments und den PUMP INLET-Anschluß an den Ausgang Ihres Instruments an.

Füllen Sie das Reservoir bis zu einem Stand, der zwischen den horizontalen Markierungen liegt, die auf dem Blech markiert sind, das den Arbeitsbereich von der Pumpeneinheit trennt.

Verwenden Sie niemals entflammbare oder Korrosion verursachende Flüssigkeiten. Für den Betrieb im Arbeits-Temperaturbereich bis +80°C empfiehlt NESLAB Leitungswasser. Oberhalb +80 °C ist der Anwender selbst für die verwendeten Flüssigkeiten verantwortlich. Über +115 °C dürfen Sie niemals pures Ethylenglykol als Badflüssigkeit verwenden.

Wenn sie zu einem externen System zirkulieren, sollten Sie zusätzliche Kühlflüssigkeit zur Hand haben, um den Kühlflüssigkeitsstand in den Zirkulationsleitungen und dem externen System beibehalten zu können.

Betreiben Sie das Gerät niemals mit leerem Arbeitsbereich!

Inbetriebnahme
Vor Inbetriebnahme des Gerätes vergewissern Sie sich bitte, daß die elektrischen Anschlüsse und die Rohr- u. Schlauchanschlüsse sachgemäß installiert sind und daß das gesamte System mit Kühlflüssigkeit gefüllt ist.

Geräte, die bei 220 Volt betrieben werden, verfügen über einen Stromkreisunterbrecher auf der Rückseite des Gerätes. Vergewissern Sie sich, daß dieser auf ON gestellt ist. Um das Gerät einzuschalten, müssen Sie den I/O-Schalter auf „I“ stellen. Die Power-Lampe leuchtet auf, wenn das Gerät in Betrieb ist. Um das Gerät abzuschalten, muß der I/O-Schalter auf „O“ gestellt werden.

Die HEAT-LED-Anzeige zeigt den Status des Heizelements an. Sie leuchtet auf, wenn das Heizelement arbeitet. Wenn die Arbeitstemperatur den gewünschten Setpoint erreicht, blinkt die LED-Anzeige, um den ungefähren Arbeitsrhythmus des Heizelements anzuzeigen.

Mikroprozessor-Temperatursteuerung
Bitte schlagen Sie Sektion IV der Betriebsanleitung auf, um die kompletten Bedienungsanweisungen für die Mikroprozessorsteuerung nachzulesen.

Wartung
Überprüfen Sie das Reservoir regelmäßig. Sollte eine Säuberung notwendig sein, spülen Sie das Reservoir mit einer speziellen Reinigungsflüssigkeit, die mit dem Umlaufsystem und der Zirkulationsflüssigkeit kompatibel ist.

Für umfassende Informationen einschließlich Fehlerbeseitigungsmöglichkeiten schlagen Sie bitte in der Betriebsanleitung nach oder wenden Sie sich an unsere Service-Abteilung: 069/50 91 90 32.

EX Kvik Referance

Installation:
Operationstemperatur ved 100% udnyttelse er fra stuetemperatur til+75^0 C under forudsætning af, at netspændingen er den nominelle 240V +/- 10%.

Tilslutning af slanger er på bagsiden mærket „PUMP INLET“ (ind) and „PUMP OUTLET“ (ud). Tilslutningerne er $^1/_4$" MPT-gevind.

Fyld resovoiret til mærket placeret på bafflen mellem arbejdsområdet og pumpeenheden.

Anvend aldrig brandbare væsker, rent ionbyttet eller dobbeltdestilleret vand kan anvendes op til +80^{0}C, over denne temperatur anbefales specialvæsker.

Sørg altid for at den rette mængde væske er til stede i termostatkarret, og husk at kompensere for den væske, der medgår til ekstern cirkulation.

Betjening:
Før opstart checkes elektriske forbindelser, slangeforbindelser og kølevæske stand.

Check hovedkontakten på bagsiden af badet, og sørg for at den er tændt. Når badet skal startes trykkes I/O kontakten på siden i I position, og strømindikatoren tænder. Skal badet slukkes, trykkes I/O kontakten i O stilling, og indikatoren slukker.

Dioden på frontpanelet angiver status på badet, der lyser ved opvarmning og slukker, når den indstillede temperatur er nået.

Microprocessorkontrol:
Se venligst Section IV i manualen.inde, skal temperaturen ændres drejes herefter på „Adjust“ knappen. Slip „Display“ knappen og aktuel temperatur vises

Periodisk vedligeholdelse:
Check standen af kølevæske periodisk. Før skift af væske indstilles temperaturen på „de-ice“. Check med mellemrum vakuummet på pumpesiden, rens systemet og check for aflejringer, vækst, utætheder og evt. filtre. Husk åben aldrig instrumentet uden strømmen er afbrudt, og strømkablet er taget ud!

EX met Microprocessor, Handleiding voor snelle installatieprocedures

Installatie
Plaats het apparaat op een tafel of werkbank. Omgevingstemperaturen moeten liggen tussen de +10°C en +27°C.

Let erop dat de netspanning gelijk is aan het aangegeven voltage, +/- 10%.

De slangaansluitingen zijn bevestigd aan de achterkant van het apparaat en zijn voorzien van de labels PUMP INLET en PUMP OUTLET. Deze aansluitingen zijn 1/4 inch MPT. Verwijder de pluggen indien externe circulatie gewenst is. Bevestig de PUMP OUTLET aan de ingang van uw applicatie. Bevestig de PUMP INLET aan de uitgang van uw applicatie.

Vul nu het reservoir tot het niveau tussen de horizontale strepen op de roestvrij stalen scheidingsplaat, die de werkruimte van het pompgedeelte scheidt.

Gebruik nooit brandbare of andere koelvloeistoffen, die het toestel kunnen aantasten. Kraanwater wordt in het algemeen aanbevolen wanneer u bij temperaturen werkt van +8°C tot +80°C. Boven de + 80C. zal de gebruiker verantwoordelijk zijn voor de benodigde vloeistoffen. Indien men boven de 115°C. werkt, gelieve nooit puur ethylene glycol als badvloeistof te gebruiken.

Wanneer u wilt pompen naar een extern systeem, dient u altijd extra vloeistof achter de hand te houden om met juiste vloeistofniveau's zowel in het interne als het externe gedeelte van het systeem, te handhaven.

Gebruik het apparaat nooit wanneer het reservoir leeg is.

Operationeel gebruik
Alvorens het apparaat in gebruik te nemen, dient u eerst alle elektrische- en slangaansluitingen te controleren. Tevens dient u te controleren of het systeem gevuld is met vloeistof.

220 Volt apparaten hebben een z.g. "circuit breaker" aan de achterkant van het apparaat. Controleer of deze in werking is gesteld. Om het apparaat te starten, gelieve de I/O knop aan de zijkant van het apparaat te draaien naar de I positie. Het lampje zal oplichten als indicatie dat het systeem in werking is gesteld. Om het apparaat uit te zetten, gelieve de I/O knop naar de O positie te draaien.

Het "HEAT LED" duidt de actuele status van het verwarmings-element aan. Het zal oplichten indien het verwarmingselement in werking is gesteld. Als de ingestelde temperatuur de set-point heeft bereikt, zal de LED aan en uit gaan om het proces van de heater aan te duiden.

Microprocessor Controller
Voor verdere (complete) instructies betreffende de bediening van de microprocessor regelaar, zie hoofstuk IV van deze handleiding.

Periodiek Onderhoud
Het reservoir dient regelmatig gecontroleerd te worden. Indien reiniging noodzakelijk is, zal het reservoir schoongespoeld moeten worden met een vloeistof, welke verenigbaar is met het systeem en de koelvloeistof.

Indien u meer informatie wenst, inclusief procedures in geval van problemen, kunt u de handleiding raadplegen of contact opnemen met de NESLAB service-afdeling: (+31) - 40 - 300066.

Kortfattad Bruksanvisning för EX Mikroprocessor

Installation
Ställ maskinen på ett stadigt bord eller en bänk. Temperaturen i rummet bör vara mellan +50°F (10°C) och +80°F (27°C).

Försäkra att spänningen är den samma som den som är given i instruktionerna ± 10%.

Röranslutning finns på baksidan av maskinen och har följande beskrivning: SUPPLY och RETURN. Anslutningarna är 1/4 inch MPT. Ta bort de skyddande plast bitarna från röranslutningarna. Anslut SUPPLY kopplingen till intaget av din anordning och RETURN kopplingen till uttaget.

För att fylla tanken, lösgör skruvarna och ta bort luckan. Ta bort tank locket och fyll tanken med ren kylnings vätska.

Använd aldrig eldfarliga eller frätande vätskor. Kran vatten rekommenderas upp till +80°C. Över +80°C är användaren ansvarig för vilken vätska som används. Använd aldrig ren etylen glykol som vätska över 115°C.

Ha extra vätska redo om din anordning kräver det så att den rätta nivån behålls i cirkulations sytemet.

Användning
Innan maskinen startas, kontrollera alla elektriska och alla rör anslutningar. Se till att cirkulations systemen har fyllts med vätska.

220V maskiner har en ström brytare på baksidan av maskinen. För att starta maskinen, sätt I/O knappen på sidan av maskinen på I. Lampan lyser för att visa att maskinen är på. Sätt knappen på O för att stänga av den.

Mikroprocessor Kontroll.
Se del IV av den här bruksanvisningen för en utförlig beskrivning av Mikroprocessor kontrollen.

Periodiskt Underhåll
Inspektera vätskan i tanken periodvis. Om det är nödvändigt med rengöring, spola tanken med en vätska som är förenlig med cirkulations sytemet och med kylvätskan.

PROCEDIMIENTOS DE OPERACION DE REFERENCIA RAPIDA
PARA EL EX CON MICROPROCESADOR

INSTALACION

Sitúe la unidad sobre una mesa resistente o sobre un banco de trabajo. Las temperaturas ambientes deben estar dentro del rango de + 50 ºF a + 80 ºF.

Asegúrese de que el voltaje de la fuente de energía sea igual que el voltaje especificado, +/- 10%.

Las conexiones de tuberías están situadas en la parte trasera de la unidad y están marcadas como PUMP INLET y PUMP OUTLET. Estas conexiones son 1/4" MPT. Saque las tapas cuando requiera circulación externa. Conecte el adaptador PUMP OUTLET a la entrada de su aplicación. Conecte el adaptador PUMP INLET a la salida de su aplicación.

Llene el reservorio a un nivel entre los marcadores horizontales situados en la puerta de acero inoxidable que separa la zona de trabajo de la bomba.

No utilice nunca fluidos inflamables o corrosivos. Se recomienda utilizar agua corriente para operar a +80 ºC. Por encima de +80 ºC, el usuario es responsable de los fluidos que utilice. Por encima de 115 ºC no utilice nunca etileno glicol puro como fluido de baño.

Cuando bombee a un sistema externo, tenga fluido extra a mano para mantener el nivel apropiado tanto en las lineas circulantes como en el sistema externo.

Nunca haga funcionar el instrumento con el área de trabajo vacía.

OPERACION

Antes de poner en marcha la unidad, compruebe todas las conexiones eléctricas y de tuberías. Asegúrese de que el sistema circulador se ha llenado con fluido.

Las unidades de 220 V. tienen un cortador de circuito en la parte trasera de la unidad. Asegúrese de que está en posición ON. Para poner en marcha la unidad, ponga el interruptor I/O situado en el lateral de la unidad en posición I. La lámpara Power se iluminará para indicar que el sistema está funcionando. Para apagarlo, ponga el interruptor de encendido en posición O.

El LED HEAT indica la situación del sistema del calentador. Se ilumina para indicar que el calentador está funcionando. A medida que la temperatura de funcionamiento se aproxima al punto fijado, el LED ciclará para indicar el ciclo de trabajo del calentador.

CONTROLADOR POR MICROPROCESADOR

Ver Sección IV de este manual para instrucciones completas para utilizar el controlador por microprocesador.

MANTENIMIENTO PERIODICO

Inspeccione periódicamente el fluido del reservorio. Si es necesaria una limpieza, rocíe el reservorio con un fluido de limpieza compatible con el sistema de circulación y el fluido recirculante.

Para una información completa, incluyendo solución de problemas, refiérase al manual de instrucciones o contacte con el Departamento de Servicio al Cliente en el teléfono 1-800-258-0830.

Blank page.

Appendix C Programming Software

NEScom Software

The NESLAB Communications Software is a user friendly software that allows you to automate your temperature control process. The software includes a 3½" disk, Comprehensive Operator's Manual and a toll-free number to a trained technical staff.

NEScom Software allows you to write custom temperature programs for our Digital or Microprocessor based temperature control apparatus. Choose upper or lower temperature limits and monitor system status with an alarm. NEScom can also record your results on a user selectable graph. NesCom must be used with an IBM or 100% compatible computer.

Select from easy to use product icons.

Create graphs and charts.

Easily configure ramping functions which set the setpoint over time.

View pop-up alarm windows which display if an alarm condition occurred.

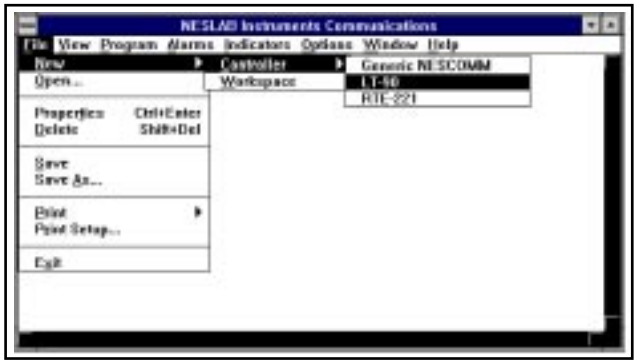

Select software functions from the easy to use pulldown menus.



View a virtual controller screen which allows remote monitoring and operation of product control panel.

DeltaTemp

DeltaTemp programming software is now available for free download from NESLAB ONLINE BBS (Bulletin Board System) at 603-427-2490.

DeltaTemp software allows you to write custom temperature programs for NESLAB digital units (any unit with a digital temperature readout AND a 10-15 pin INTERFACE port). The menu-driven program provides a table format for entering temperature parameters and a visual graph confirmation of the program you have designed. Program time can range from 0 to 999 minutes with unlimited looping. Choose upper and lower temperature limits and monitor system status with an audible alarm. DeltaTemp can also record your results on a printed graph or file. DeltaTemp is a DOS program, and requires an IBM or 100% compatible computer.

DeltaTemp may require use of a computer interface device, depending on which NESLAB unit is being used. Refer to the setup diagram in the DeltaTemp folder for full details.

To download the software, go to: CONFERENCES / SOFTWARE / DeltaTemp.

The folder also contains the operating manual, setup diagrams, application notes, and directions on making your own interface cable.

NESLAB ONLINE is a FirstClass® system accessible by general terminal software (Windows Terminal accessory, ClarisWorks Communications, Z-Term, Pro-Comm, or similar).

To use the full graphics and features of the BBS we recommend using FirstClass® Client software. FirstClass® Client is available for Macintosh or Windows platforms. It is available from many sources:

NESLAB ONLINE
Mac: Conferences/Software/Macintosh
Windows: Conferences/Software/Windows

AMERICA ONLINE
Mac: Computing/software center/mac communications forum/industry connection/softarc
Windows: Computing/software center/communications programs

COMPUSERVE:
Mac: TWEUROPA/Teletools/FCMAC.ZIP
Windows: PCBBS/BBS programs/FC300.EXE

WORLD WIDE WEB
http://www.softarc.com/try.htm

WARRANTY

NESLAB Instruments, Inc. warrants for 12 months from date of shipment any NESLAB unit according to the following terms.

Any part of the unit manufactured or supplied by NESLAB and found in the reasonable judgment of NESLAB to be defective in material or workmanship will be repaired at an authorized NESLAB Repair Depot without charge for parts or labor. The unit, including any defective part must be returned to an authorized NESLAB Repair Depot within the warranty period. The expense of returning the unit to the authorized NESLAB Repair Depot for warranty service will be paid for by the buyer. NESLAB's responsibility in respect to warranty claims is limited to performing the required repairs or replacements, and no claim of breach of warranty shall be cause for cancellation or recision of the contract of sales of any unit.

With respect to units that qualify for field service repairs, NESLAB's responsibility is limited to the component parts necessary for the repair and the labor that is required on site to perform the repair. Any travel labor or mileage charges are the financial responsibility of the buyer.

The buyer shall be responsible for any evaluation or warranty service call (including labor charges) if no defects are found with the NESLAB product.

This warranty does not cover any unit that has been subject to misuse, neglect, or accident. This warranty does not apply to any damage to the unit that is the result of improper installation or maintenance, or to any unit that has been operated or maintained in any way contrary to the operating or maintenance instructions specified in NESLAB's Instruction and Operation Manual. This warranty does not cover any unit that has been altered or modified so as to change its intended use.

In addition, this warranty does not extend to repairs made by the use of parts, accessories, or fluids which are either incompatible with the unit or adversely affect its operation, performance, or durability.

NESLAB reserves the right to change or improve the design of any unit without assuming any obligation to modify any unit previously manufactured.

THE FOREGOING EXPRESS WARRANTY IS IN LIEU OF ALL OTHER WARRANTIES, EXPRESSED OR IMPLIED, INCLUDING BUT NOT LIMITED TO WARRANTIES OR MERCHANTABILITY AND FITNESS FOR A PARTICULAR PURPOSE.

NESLAB'S OBLIGATION UNDER THIS WARRANTY IS STRICTLY AND EXCLUSIVELY LIMITED TO THE REPAIR OR REPLACEMENT OF DEFECTIVE COMPONENT PARTS AND NESLAB DOES NOT ASSUME OR AUTHORIZE ANYONE TO ASSUME FOR IT ANY OTHER OBLIGATION.

NESLAB ASSUMES NO RESPONSIBILITY FOR INCIDENTAL, CONSEQUENTIAL, OR OTHER DAMAGES INCLUDING, BUT NOT LIMITED TO LOSS OR DAMAGE TO PROPERTY, LOSS OF PROFITS OR REVENUE, LOSS OF THE UNIT, LOSS OF TIME, OR INCONVENIENCE.

This warranty applies to units sold in the United States. Any units sold elsewhere are warranted by the affiliated marketing company of NESLAB Instruments, Inc. This warranty and all matters arising pursuant to it shall be governed by the law of the State of New Hampshire, United States. All legal actions brought in relation hereto shall be filed in the appropriate state or federal courts in New Hampshire, unless waived by NESLAB.

EX Series
Bath Circulators

NESLAB Manual P/N 000259
Rev. 07/16/97

Instruction and Operation Manual



NESLAB online

Product Service Information, Electronic Catalog,
Applications Notes, MSDS Forms, e-mail.

(603)427-2490

Set modem to 8-N-1 protocol, 1200 - 14400 baud

Voice Info: (800) 4-NESLAB

Comments on this manual can be sent to:

NESLAB@lifesciences.com

or visit our Web page at:

http://www.neslabinc.com

EX-Series Bath Circulator
Table of Contents

PREFACE

Compliance 2
Unpacking 2
Warranty 2
After-sale Support 2

SECTION I
Safety

Warnings 3

SECTION II
General Information

Description 4
Specifications 4

SECTION III
Installation

Site 6
Electrical Requirements 6
Plumbing Requirements 7
Fluids 9
Filling Requirements 9
Autorefill (Optional) 10

SECTION IV
Controllers

Controllers 11
Analog Controller 11
Digital Controller 12
Tap Water Cooling Coils 13
Boost Heater 13
High Temperature/Low Liquid Level Safety 14
15-pin Accessory Connector (Optional) 15

SECTION V
Maintenance

Service Contracts 16
Reservoir Cleaning 16
Algae 16

SECTION VI
Troubleshooting

Checklist 17
Service Assistance and Technical Support 17

SECTION VII
Programming Software

NEScom 18
DeltaTemp 19

APPENDIX
International Quick Reference Guides

WARRANTY

Preface

Compliance

Products tested and found to be in compliance with the requirements defined in the EMC standards defined by 89/336/EEC as well as Low Voltage Directive (LVD) 73/23/EEC can be identified by the CE label on the rear of the unit. The testing has demonstrated compliance with the following directives:

LVD, 73/23/EEC	Complies with UL 3101-1:93
EMC, 89/336/EEC	EN 55011, Class A Verification EN 50082-1:1992 IEC 1000-4-2:1995 IEC 1000-4-3:1994 IEC 1000-4-4:1995

For any additional information refer to the Letter of Compliance that shipped with the unit (Declaration of Conformity).

Unpacking

Retain all cartons and packing material until the unit is operated and found to be in good condition. If the unit shows external or internal damage, or does not operate properly, contact the transportation company and file a damage claim. Under ICC regulations, this is your responsibility.

Warranty

Units have a warranty against defective parts and workmanship for one full year from date of shipment. See back page for more details.

After-sale Support

NESLAB is committed to customer service both during and after the sale. If you have questions concerning the operation of your unit, contact our Sales Department. If your unit fails to operate properly, or if you have questions concerning spare parts or Service Contracts, contact our Customer Service Depart-ment. Before calling, please obtain the following information from the unit's serial number label:

- *BOM number*_____
- *Serial number* _____

Section I Safety

Warnings

Make sure you read and understand all instructions and safety precautions listed in this manual before installing or operating your unit. If you have any questions concerning the operation of your unit or the information in this manual, contact our Sales Department.

Performance of installation, operation, or maintenance procedures other than those described in this manual may result in a hazardous situation and may void the manufacturer's warranty.

Observe all warning labels.

Never remove warning labels.

Never operate damaged or leaking equipment.

Never operate the unit without bath fluid in the bath.

Never use pure ethylene glycol as a bath fluid. A minimum 80/20 mixture of Ethylene Glycol and tap water is allowed.

For 220 - 240 volt units supplied without a line cord, use a harmonized (HAR) grounded 3-conductor cord, type H05VV-F, with conductors listed below. A suitable cord end is required for connecting to the equipment (see unit socket) and must terminate with an IEC approved plug for proper connection to power supply.

NON-BOOST HEATER UNITS	**Nominal 1.0 mm² cross section rated 10 Amps** **Unit Socket: IEC - 320 C13**
BOOST HEATER UNITS	**Nominal 1.5 mm² cross section rated 16 Amps** **Unit Socket: IEC - 320 C19**

Always turn off the unit and disconnect the line cord from the power source before performing any service or maintenance procedures, or before moving the unit.

Always empty the bath before moving the unit.

Never operate equipment with damaged line cords.

Refer service and repairs to a qualified technician.

In addition to the safety warnings listed above, warnings are posted throughout the manual. These warnings are designated by an exclamation mark inside an equilateral triangle with text highlighted in bold print. Read and follow these important instructions. Failure to observe these instructions can result in permanent damage to the unit, significant property damage, personal injury or death.

Section II General Information

Description

The EX Series Bath Circulators are designed to provide temperature control for applications requiring a fluid work area or pumping to an external system.

The units consist of a circulation pump, stainless steel bath, a work area cover, and a temperature controller.

Specifications

	EX-111	EX-211
Temperature Range[1] *Analog controller* *Digital controller*	Ambient +3°C to +100°C Ambient +3°C to +150°C	
Temperature Stability[2] *Analog controller* *Digital controller*	±0.1°C ±0.01°C	
Pumping Capacity	15 lpm at 0' (0 M) 0 lpm at 16' (4.9 M)	
Heater *Watts* *50 Hz Models*	800 1000	
Bath Work Area (H x W x D) *Inches* *Centimeters*	4 3/4 x 8 x 6 12.1 x 20.3 x 15.2	9 1/4 x 10 x 6 23.5 x 25.4 x 15.2
Bath Volume *Liters*	7.0	12.25
Case Dimensions *(L x W x D)* *Inches* *Centimeters*	17 x 10 5/16 x 15 7/8 43.2 x 26.2 x 40.3	17 x 12 3/8 x 18 3/8 43.2 x 31.4 x 46.7
Power Requirements[3]	115 V, 60 Hz, 9 Amps 220/240 V, 50 Hz, 5.5 Amps	

1. Low end temperature with tap water cooling.
2. Stability is a function of the bath fluid temperature. The use of a work area cover and tap water cooling may optimize bath stability for your work. For some applications, agitation and stability above ambient temperatures may be may be improved by connecting a small length of hose between the PUMP INLET and PUMP OUTLET connections on the rear of the unit.
3. Power Board Transformer Fuse–Analog T 0.5A 250V (Qty 1), Digital T 0.8A 250V (Qty 2) [T=Time Delay]

Specifications

	EX-221	EX-411	EX-511
Temperature Range[1] *Analog controller* *Digital controller*	Ambient +3°C to +100°C Ambient +3°C to +150°C		
Temperature Stability[2] *Analog controller* *Digital controller*	±0.1°C ±0.01°C		
Pumping Capacity	15 lpm at 0' (0 M) 0 lpm at 16' (4.9 M)		
Heater *Watts* *50 Hz Models*	800/800 boost 1000/800 boost	800 1000	800/800 boost 1000/800 boost
Bath Work Area *(H x W x D)* *Inches* *Centimeters*	 9 1/4 x 10 x 9 23.5 x 25.4 x 22.9	 19 1/4 x 10 x 6 48.9 x 25.4 x 15.2	 16 1/4 x 10 x 12 41.3 x 25.4 x 30.5
Bath Volume *Liters*	20.5	22.0	41.5
Case Dimensions *(L x W x D)* *Inches* *Centimeters*	 20 x 12 3/8 x 18 3/8 50.8 x 31.4 x 46.7	 17 x 12 3/8 x 28 3/8 43.2 x 31.4 x 72.1	 23 x 12 3/8 x 25 3/8 58.4 x 31.4 x 64.5
Power Requirements[3]	115 V, 60 Hz, 16 Amps 220/240 V, 50 Hz, 10 Amps	115 V, 60 Hz, 9 Amps 220/240 V, 50 Hz, 5.5 Amps	115 V, 60 Hz, 16 Amps 220/240 V, 50 Hz, 10 Amps

1. Low end temperature with tap water cooling.
2. Stability is a function of the bath fluid temperature. The use of a work area cover and tap water cooling may optimize bath stability for your work. For some applications, agitation and stability above ambient temperatures may be may be improved by connecting a small length of hose between the PUMP INLET and PUMP OUTLET connections on the rear of the unit.
3. Power Board Transformer Fuse–Analog T 0.5A 250V (Qty 1), Digital T 0.8A 250V (Qty 2) [T=Time Delay]

Section III Installation

Site

Never place the unit in a location where excessive heat, moisture, or corrosive materials are present.

Lift the unit by grasping it under the case, near the rubber feet.

Locate the unit on a sturdy table or bench top. Ambient temperatures should be inside the range of +50°F to +80°F (+10°C to +27°C).

Electrical Requirements

Line voltage may be easily accessible inside the pump/control box. Always unplug the unit prior to removing pump/control box cover.

Refer to the serial number label on the rear of the unit to identify the specific electrical requirements of your unit.

Ensure the voltage of the power source meets the specified voltage, ±10%.

The unit construction provides extra protection against the risk of electric shock by grounding appropriate metal parts. The extra protection may not function unless the power cord is connected to a properly grounded outlet. It is the user's responsibility to assure a proper ground connection is provided.

For 220 - 240 volt units supplied without a line cord, use a harmonized (HAR) grounded 3-conductor cord, type H 0 5 V V - F , with conductors listed below. A suitable cord end is required for connecting to the equipment (see unit socket) and must terminate with an IEC approved plug for proper connection to power supply.

NON-BOOST HEATER UNITS	**Nominal 1.0 mm² cross section rated 10 Amps** **Unit Socket: IEC - 320 C13**
BOOST HEATER UNITS	**Nominal 1.5 mm² cross section rated 16 Amps** **Unit Socket: IEC - 320 C19**

Plumbing Requirements



Ensure the unit is off before connecting tubing to the unit.

Hose Connections

The pump connections are located at the rear of the pump box and are labelled PUMP INLET and PUMP OUTLET. These connections are bent upward so the recirculating fluid will drain back into the reservoir when the hoses are disconnected. The connections are capped with stainless steel serrated plugs.

The pump lines have ¼" MPT for mating with standard plumbing fittings. For your convenience two stainless steel adapters, ¼" FPT to $^{3}/_{8}$" O.D. serrated fitting, are provided. (To assure proper fit, they should be installed using 1½ turns of Teflon® tape around the threads.)

Flexible tubing, if used, should be of heavy wall or reinforced construction. Make sure all tubing connections are securely clamped. Avoid running tubing near radiators, hot water pipes, etc. If substantial lengths of tubing are necessary, insulation may be required to prevent loss of cooling capacity.

Tubing and insulation are available from NESLAB. Contact our Sales Department for more information (see Preface, After-sale Support).

It is important to keep the distance between the unit and the external system as short as possible, and to use the largest diameter tubing practical. Tubing should be straight and without bends. If diameter reductions must be made, make them at the inlet and outlet of the external system, not at the unit.

If substantial lengths of cooling lines are required, they should be pre-filled with bath fluid before connecting them to the unit. This will ensure that a adequate amount of fluid will be in the bath once it is in operation.

Pumping

The pump is designed to deliver a flow of 15 liters/minute (4 gallons per minute) at 0 feet head. To prevent external circulation, the PUMP INLET and PUMP OUTLET lines are capped. The caps must be removed when external circulation is required.

To properly secure the external hose connections to the unit, wrap teflon tape around the pipe line threads before installation. Once the hose connections are made, the pump must be properly plumbed to an external system. *It is important the bath is not in operation until all plumbing is complete.*

If the bath is not used for external circulation, make sure the stainless steel caps are in place prior to operating the bath.

Circulating to an open container

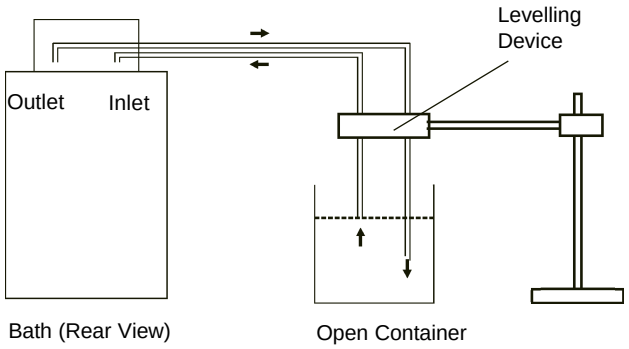

A stainless steel leveling device is available to aid circulation to an open vessel. Contact our Sales Department for more information (see Preface, After-sale Support).

Support the leveling device over the open container with a ringstand. Stagger the tubes in the leveling device so one tube is submerged in the vessel fluid, and the other tube is level with the fluid surface. Connect the deeper tube to the PUMP OUTLET and the shorter tube to the PUMP INLET.

Adjust the flow rate using the accessory flow control valve connected to the PUMP OUTLET, or by partially restricting the outlet tubing. When properly adjusted, the pump inlet will draw an occasional air bubble to prevent over flow, and the pump outlet will force fluid through the submerged tube to prevent aeration of the vessel.

To avoid siphoning the bath work area when the unit is shut off, lift the leveling device out of the vessel and above the level of the unit.

Circulating through two closed loops

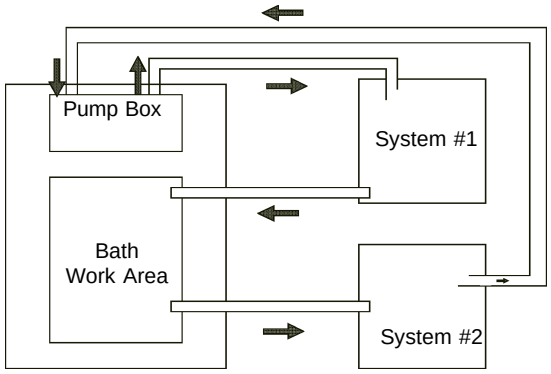

Bath (Top View)

The pump can be used to circulate through two closed loop systems. Connect the shortest practical length of flexible tubing from the PUMP OUTLET to the inlet of external system #1. Connect the outlet of system #1 directly into the bath work area. Connect tubing from the bath work area to the inlet of system #2. Connect the outlet of system #2 to the PUMP INLET.

Drain



Ensure the temperature of the bath fluid is safe before draining the unit.

The unit is equipped with a drain located at the back of the unit at the base of the bath. The drain has ¼ inch male pipe threads and is capped with a stainless steel plug. To drain the reservoir simply remove the cap.

To assure proper fit when replacing the cap, be sure to line the threads with Teflon tape.

Fluids



Never use flammable or corrosive fluids with this unit.

Tap water is the recommended fluid for operation to +80°C.

Above +80°C, the user is responsible for fluids used.



Never use pure ethylene glycol as a bath fluid. A minimum 80/20 mixture of Ethylene Glycol and tap water is allowed.

Filling Requirements

The bath work area has a high and low level marker to guide filling. The markers are 1 inch horizontal slits located in the center of the stainless steel baffle separating the work area and the pump assembly. The correct fluid level falls between these two markers. The heating coils will be exposed and may become damaged if the correct fluid level is not provided.

When pumping to an external system, keep extra fluid on hand to maintain the proper level in both the circulating lines and external system.



Never run the unit when the work area is empty.

Autorefill (Optional)

An optional autorefill device is designed to maintain the correct level of fluid in the reservoir. The device consists of a float switch and a solenoid valve. If the fluid level falls, the float switch will open the solenoid valve and allow makeup fluid to fill the reservoir. Once the fluid reaches the proper level, the float switch will rise and the solenoid valve will close.

The plumbing connection for the autorefill device, labeled WATER INLET, is located on the rear of the autorefill assembly. The connection is 3/8 inch OD stainless steel. Remove the nut and install the tubing from your makeup fluid source. Reinstall the nut and tubing on to the connection.

Tubing is available from NESLAB. Contact our Sales Department for more information (see Preface, After-sale Support).

The autorefill device requires its own source of electrical power. The connector for the line cord (provided with the assembly) is also located on the rear of the autorefill device. The connector is labelled POWER.

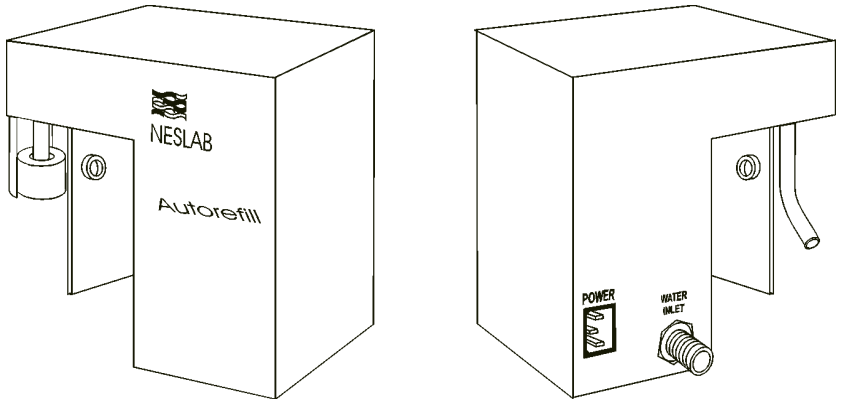

Autorefill Device

Section IV Controllers

Controllers

Two standard temperature controllers are available with the unit: Analog and Digital. This section explains the installation and operation of the controllers.

Analog

Start Up

Before starting the unit, check all electrical and plumbing connections and make sure the work area has been properly filled with bath fluid.

To start 115V units press the I/O switch on the side of the controller to the **I** (power on) position. The pump will start and the POWER LED will light.

220V units have a circuit breaker instead of a switch. The circuit breaker is labeled **I** (power on) and **O** (power off). Ensure the circuit breaker is in the **I** position.

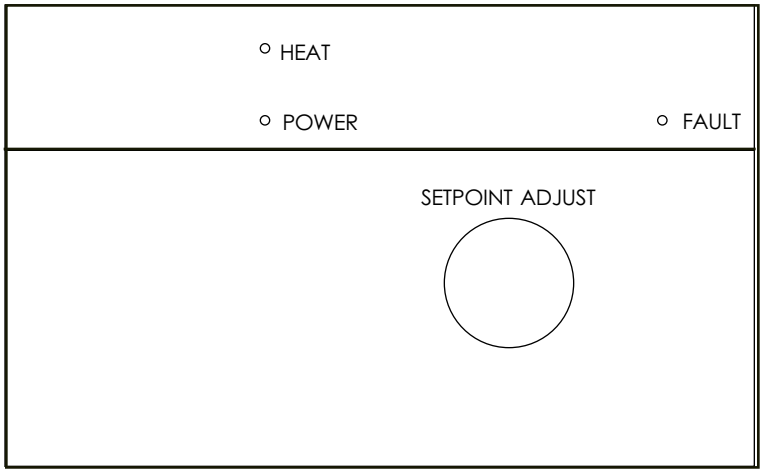

Analog Controller

The HEAT LED indicates the status of the heater. As the temperature of the fluid in the bath approaches the temperature setpoint, the lamp will cycle on and off to indicate the approximate duty cycle of the heater.

Temperature Adjustment

Units with Analog temperature controller are equipped with a glass tube thermometer. Insert the thermometer in the grommet located on the left side of the work area.

To adjust the bath temperature, turn the dial to the desired setpoint. Use the bath thermometer to make fine adjustments to the bath temperature.

Digital

Start Up

Before starting the unit, check all electrical and plumbing connections and make sure the work area has been properly filled with bath fluid.

To start 115V units press the I/O switch on the side of the controller to the **I** (power on) position. The pump will start and the POWER LED will light.

220V units have a circuit breaker instead of a switch. The circuit breaker is labeled **I** (power on) and **O** (power off). Ensure the circuit breaker is in the **I** position.

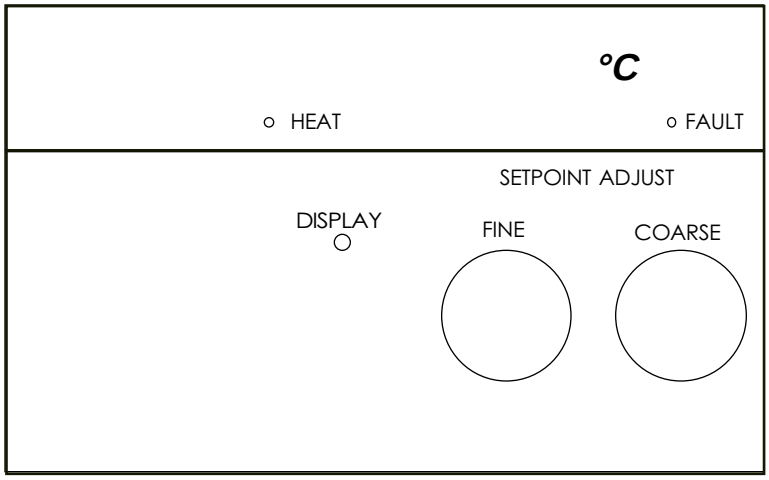

Digital Controller

The HEAT LED indicates the status of the heater. As the temperature of the fluid in the bath approaches the temperature setpoint, the lamp will cycle on and off to indicate the approximate duty cycle of the heater.

Temperature Adjustment

To display the temperature setpoint, press the DISPLAY switch. To adjust the setpoint, press and hold the DISPLAY switch and turn the COARSE and FINE dials until the temperature setpoint is indicated on the LED display.

NOTE: Inadvertent movement of the COARSE and FINE dials, regardless of the position of the DISPLAY switch, will result in a change of the setpoint. The change will not be immediately reflected on the LED display unless the DISPLAY switch is pressed. The display will eventually change as the unitre-sponds to the new setpoint.

Tap Water Cooling Coils

The unit is equipped with a cooling coil located behind the stainless steel baffle in the bath. The bath can be cooled and temperature stability improved by circulating cold fluid through the coil. For best results, the fluid should be at least 5°C below the temperature setpoint. The required fluid flow rate depends on the type of fluid, the setpoint, and the desired stability.

The plumbing connections for the cooling coil are $^{3}/_{8}$ inch OD stainless steel tubes located on the rear of the unit. These connections will accept $^{3}/_{8}$ inch or $^{5}/_{16}$ inch ID tubing. Tubing is available from NESLAB.

Connect the COOLING COIL IN tube to the cold fluid source. Connect the COOLING COIL OUT tube to the cold fluid return (or drain if tap water is being used).

Boost Heater

EX-221 and EX-511 units are equipped with a boost heater. The boost heater is designed to provide additional heat to the unit.

To start the heater press the BOOST HEAT switch, located on the front of the temperature controller, to the ON position. Even though the switch automatically returns to the OFF position, the boost heater will start to function. (You can verify this by observing the fluid temperature rising.) The boost heater automatically ceases operation when the setpoint is reached.

High Temperature/ Low Liquid Level Safety

To protect your application, the adjustable High Temperature/Low Liquid Level Safety (HIGH TEMP/LOW LEVEL) ensures the heater will not exceed temperatures which can cause serious damage to your unit. A single temperature sensor, located on the heater coils in the bath, monitors both conditions. A High Temperature/Low Liquid Level fault occurs when the temperature of the sensor exceeds the set temperature limit.

In the event of a fault, the unit will shut down. The cause of the fault must be identified and corrected before the unit can be restarted.

The safety on single heater systems is not preset and must be adjusted during initial installation.

Units with a boost heater have an additional nonadjustable safety located behind the main safety. It has a red reset button but no adjustment knob.

To set the safety, locate the HIGH TEMP/LOW LEVEL SAFETY adjustment dial on the right side of the pump box. Turn the dial fully clockwise and press the red RESET switch. The RESET switch is located next to the adjustment dial. NOTE: For units without a reset switch turn the I/O switch off then back on.

Start the unit. Adjust the setpoint for a few degrees higher than the highest desired fluid temperature and allow the bath to stabilize at the temperature setpoint. Turn the HIGH TEMP/LOW LEVEL SAFETY dial counterclockwise until you hear a click and the unit shuts down. The red FAULT LED on the temperature controller will light to indicate a fault has occurred.

Cool the bath and then, without moving the adjustment dial, press the red RESET switch or turn the I/O switch off then back on.

NOTE: For units with a reset switch, the minimum high temperature safety setting is 50°C. For units without a reset switch the safety has a temperature range of 0°C to 180°C.

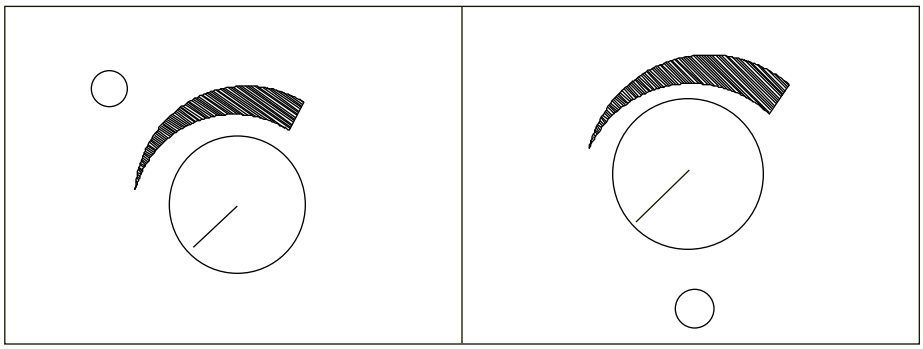

High Temperature/Low Liquid Level Safety (Typical)
(Some units do not have a reset switch.)

15-Pin Accessory Connector (Optional)

Digital units are equipped with a 15 pin D-subminiature female receptacle on the right side of the power box. An ENABLE/DISABLE switch is located just below the receptacle. Place the switch to the ENABLE position to control the bath via the receptacle connection. (The sensor temperature and setpoint, pin 7 and 8, can be read with the switch in either position.) The pin-out information is listed below.

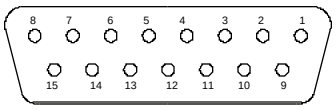

15 pin D-subminiature female receptacle

Pin #	Function
1	Chassis ground.
2	No connection.
3	Span +. Indicates the maximum setpoint value the unit can be set to operate. The temperature scale is 10mV/°C, referenced to analog ground, pin 6 (example: +350mV = +35.0°C).
4	Span -. Indicates the minimum setpoint value the unit can be set to operate. The temperature scale is 10mV/°C, referenced to analog ground, pin 6 (example: +50mV = +5.0°C).
5	No connection.
6	Analog ground. The analog ground is physically separated from the power ground throughout the unit. To prevent offsets that result from ground currents, the analog and power grounds are only connected at the unit's power supply. Analog ground should only be used as a reference pin.
7	Sensor temperature (current limited through 2.7K OHM resistor). The fluid temperature, as measured by the controller's sensor located in the reservoir, can be read at this pin. The temperature scale is 10mV/°C, referenced to analog ground, pin 6 (example: +150mV = +15.0°C).
8	Setpoint out. The present temperature setpoint can be read at this pin. The temperature scale is 10mV/°C, referenced to analog ground, pin 6 (example: +150mV = +15.0°C).
9	Power Ground.
10	No connection.
11	No connection.
12	Digital display (input only). An external voltage can be displayed on the operator panel digital display by applying the voltage to this pin. The display has a low input resistance and a full scale rating of ±1.99VDC. Input is referenced to analog ground, pin 6. The maximum voltage applied to the display should be limited to ±2VDC.
13	- 5V. Power supply of -5VDC (15mA maximum).
14	+5V. Power supply of +5VDC (50mA maximum).
15	Setpoint in. The temperature setpoint can be controlled by applying a known voltage to this pin. The temperature scale is 10mV/°C, referenced to analog ground, pin 6 (example: +230mV = +23.0°C).

NOTE: With the switch in the ENABLE position and no input to pin 15, the bath will slowly go to the setpoint value set on the digital controller.

Section V Maintenance



To avoid electrical shock, disconnect the mains cord prior to removing any access panels or covers.

Service Contracts

NESLAB offers on-site Service Contracts that are designed to provide extended life and minimal down-time for your unit. For more information, contact our Service Department (see Preface, After-sale Support).

Reservoir Cleaning

Routine cleaning can be achieved by simply sponging down the seamless stainless steel tank with tap water. (Dish washing detergent may be used but the tank must be thoroughly rinsed.)

To gain access to the entire reservoir the pump box and reservoir cover should be removed.

Remove the line cord from the rear of the unit.

Remove the four screws securing the reservoir's cover.

Carefully raise the controller and cover assembly to remove it from unit.

Place the cover on its side.

Algae

To restrict the growth of algae in the bath, we recommend the bath cover be kept in place and that all circulation lines be opaque. This will eliminate the entrance of light required for the growth of most common algae.

NESLAB also recommends the use of Chloramine-T, one gram per gallon.

Section VI Troubleshooting

Checklist

Unit will not start

Make sure the voltage of the power source meets the specified voltage, ±10%. Refer to the serial number label on the rear of the unit to identify the specific electrical requirements of your unit.

Check the High Temperature/Low Liquid Level Safety. If the FAULT light is on, make sure the fluid level in the bath is between the marks in the baffle and the HIGH TEMP/LOW LEVEL SAFETY setting is greater than the fluid temperature. Push the RESET switch(es) or, for units without a reset switch, turn the I/O switch off then back on and attempt to restart.

No external circulation

Make sure the stainless steel plugs on the PUMP INLET and PUMP OUTLET have been removed.

Check for obstructions, kinks, or leaks in the circulation tubing.

Circulation will cease when the pump head has been exceeded.

Service Assistance and Technical Support

If, after following these troubleshooting steps, your unit fails to operate properly, contact our Customer Service Department for assistance (see Preface, After-sale Support). Before calling, please obtain the following information:

Part number
Serial number
Voltage of unit
Voltage of power source

Our Service Department can provide you with a wiring diagram and a complete list of spare parts for your unit. Before calling, please obtain the following information:

Part number
Serial number

Section VII Programming Software

NEScom Software

The NESLAB Communications Software is a user friendly software that allows you to automate your temperature control process. The software includes a 3½" disk, Comprehensive Operator's Manual and a toll-free number to a trained technical staff.

NEScom Software allows you to write custom temperature programs for our Digital or Microprocessor based temperature control apparatus. Choose upper or lower temperature limits and monitor system status with an alarm. NEScom can also record your results on a user selectable graph. NesCom must be used with an IBM or 100% compatible computer.

Select from easy to use product icons.

Create graphs and charts.

Easily configure ramping functions which set the setpoint over time.

View pop-up alarm windows which display if an alarm condition occurred.

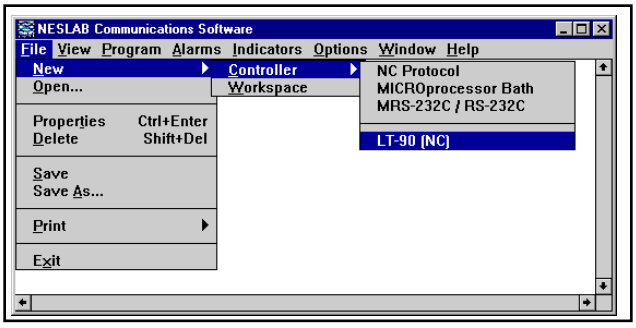

Select software functions from the easy to use pulldown menus.



View a virtual controller screen which allows remote monitoring and operation of product control panel.

DeltaTemp

DeltaTemp programming software is now available for free download from NESLAB ONLINE BBS (Bulletin Board System) at 603-427-2490.

DeltaTemp software allows you to write custom temperature programs for NESLAB digital units (any unit with a digital temperature readout AND a 10-15 pin INTERFACE port). The menu-driven program provides a table format for entering temperature parameters and a visual graph confirmation of the program you have designed. Program time can range from 0 to 999 minutes with unlimited looping. Choose upper and lower temperature limits and monitor system status with an audible alarm. DeltaTemp can also record your results on a printed graph or file. DeltaTemp is a DOS program, and requires an IBM or 100% compatible computer.

DeltaTemp may require use of a computer interface device, depending on which NESLAB unit is being used. Refer to the setup diagram in the DeltaTemp folder for full details.

To download the software, go to: CONFERENCES / SOFTWARE / DeltaTemp.

The folder also contains the operating manual, setup diagrams, application notes, and directions on making your own interface cable.

NESLAB ONLINE is a FirstClass® system accessible by general terminal software (Windows Terminal accessory, ClarisWorks Communications, Z-Term, Pro-Comm, or similar).

To use the full graphics and features of the BBS we recommend using FirstClass® Client software. FirstClass® Client is available for Macintosh or Windows platforms. It is available from many sources:

NESLAB ONLINE
Mac: Conferences/Software/Macintosh
Windows: Conferences/Software/Windows

AMERICA ONLINE
Mac: Computing/software center/mac communications forum/industry connection/softarc
Windows: Computing/software center/communications programs

COMPUSERVE:
Mac: TWEUROPA/Teletools/FCMAC.ZIP
Windows: PCBBS/BBS programs/FC300.EXE

WORLD WIDE WEB
http://www.softarc.com/try.htm

Blank page.

Appendix

International Quick Reference Guides

EX - Serie Kurzbedienungsanleitung

Installation
Stellen Sie das Gerät auf einen stabilen Tisch oder Labortisch. Die Umgebungstemperatur sollte zwischen +10 °C und +27 °C liegen.

Vergewissern Sie sich, daß die Spannung Ihrer Stromanschlüsse mit der für das Gerät vorgesehenen Spannung übereinstimmt (± 10%).

Die Schlauchanschlüsse (1/4 Zoll MPT) des Gerätes befinden sich an der Rückseite und sind mit PUMP INLET und PUMP OUTLET bezeichnet. Entfernen Sie die Kappen, falls externe Zirkulation gewünscht wird. Schließen Sie den PUMP OUTLET-Anschluß an den Eingang Ihres Instruments und den PUMP INLET-Anschluß an den Ausgang Ihres Instruments an.

Füllen Sie das Reservoir bis zu einem Stand, der zwischen den horizontalen Markierungen liegt, die auf dem Blech markiert sind, das den Arbeitsbereich von der Pumpeneinheit trennt.

Verwenden Sie niemals entflammbare oder Korrosion verursachende Flüssigkeiten. Für den Betrieb im Arbeits-Temperaturbereich bis +80°C empfiehlt NESLAB Leitungswasser. Oberhalb +80 °C ist der Anwender selbst für die verwendeten Flüssigkeiten verantwortlich. Über +115 °C dürfen Sie niemals pures Ethylenglykol als Badflüssigkeit verwenden.

Wenn sie zu einem externen System zirkulieren, sollten Sie zusätzliche Kühlflüssigkeit zur Hand haben, um den Kühlflüssigkeitsstand in den Zirkulationsleitungen und dem externen System beibehalten zu können.

Betreiben Sie das Gerät niemals mit leerem Arbeitsbereich!

Inbetriebnahme
Vor Inbetriebnahme des Gerätes vergewissern Sie sich bitte, daß die elektrischen Anschlüsse und die Rohr- u. Schlauchanschlüsse sachgemäß installiert sind und daß das gesamte System mit Kühlflüssigkeit gefüllt ist.

Geräte, die bei 220 Volt betrieben werden, verfügen über einen Stromkreisunterbrecher auf der Rückseite des Gerätes. Vergewissern Sie sich, daß dieser auf ON gestellt ist. Um das Gerät einzuschalten, müssen Sie den I/O-Schalter auf „I“ stellen. Die Power-Lampe leuchtet auf, wenn das Gerät in Betrieb ist. Um das Gerät abzuschalten, muß der I/O-Schalter auf „O“ gestellt werden.

Die HEAT-LED-Anzeige zeigt den Status des Heizelements an. Sie leuchtet auf, wenn das Heizelement arbeitet. Wenn die Arbeitstemperatur den gewünschten Setpoint erreicht, blinkt die LED-Anzeige, um den ungefähren Arbeitsrhythmus des Heizelements anzuzeigen.

Einstellung der Analog-Temperatursteuerung
Um die Temperatur einzustellen (setpoint), drehen Sie den SETPOINT ADJUST-Schalter an der Vorderseite des Gerätes auf die gewünschte Temperatur.

Einstellung der Digital-Temperatursteuerung
Um sich den Temperatur-Setpoint anzeigen zu lassen, drücken Sie den DISPLAY-Schalter und halten Sie ihn gedrückt. Um den Temperatur-Setpoint einzustellen, drücken Sie den Display-Schalter, halten diesen, und drehen gleichzeitig den SETPOINT ADJUST-Schalter so lange, bis die gewünschte Temperatur in der Digitalanzeige angezeigt wird. Wenn die Temperatur eingestellt ist, lassen Sie den Display-Schalter los. Die Digitalanzeige zeigt dann die Temperatur der Kühlflüssigkeit im Reservoir an.

Wartung
Überprüfen Sie das Reservoir regelmäßig. Sollte eine Säuberung notwendig sein, spülen Sie das Reservoir mit einer speziellen Reinigungsflüssigkeit, die mit dem Umlaufsystem und der Zirkulationsflüssigkeit kompatibel ist.

Für umfassende Informationen einschließlich Fehlerbeseitigungsmöglichkeiten schlagen Sie bitte in der Betriebsanleitung nach oder wenden Sie sich an unsere Service-Abteilung: 069/50 91 90 32.

EX Serie Kvik Referance

Installation:
Operationstemperatur ved 100% udnyttelse er fra stuetemperatur til+75^0 C under forudsætning af, at netspændingen er den nominelle 240V +/- 10%.

Tilslutning af slanger er på bagsiden mærket „PUMP INLET“ (ind) and „PUMP OUTLET“ (ud). Tilslutningerne er $^1/_4$" MPT-gevind.

Fyld resovoiret til mærket placeret på bafflen mellem arbejdsområdet og pumpeenheden.

Anvend aldrig brandbare væsker, rent ionbyttet eller dobbeltdestilleret vand kan anvendes op til +80^0 C, over denne temperatur anbefales specialvæsker.

Sørg altid for at den rette mængde væske er til stede i termostatkarret, og husk at kompensere for den væske, der medgår til ekstern cirkulation.

Betjening:
Før opstart checkes elektriske forbindelser, slangeforbindelser og kølevæske stand.
Check hovedkontakten på bagsiden af badet, og sørg for at den er tændt. Når badet skal startes trykkes I/O kontakten på siden i I position, og strømindikatoren tænder. Skal
badet slukkes, trykkes I/O kontakten i O stilling, og indikatoren slukker.

Dioden på frontpanelet angiver status på badet, der lyser ved opvarmning og
slukker, når den indstillede temperatur er nået.

Analog temperatur kontrol:
Drej ^{0}C tasten til den ønskede temperatur og lad systemet stabiliserer sig.

Digital temperatur kontrol:
Tryk på „DISPLAY“ tasten for at se den indstillede temperatur. Indstilling af ny temperatur, tryk på „DISPLAY“ og drej på „ADJUST“ indtil den rigtige temperatur vises, slip derefter „DISPLAY“ tasten. Skærmen vil nu vise den aktuelle temperatur i badet.

Periodisk vedligeholdelse:
Check standen af kølevæske periodisk. Før skift af væske indstilles temperaturen på „de-ice“. Check med mellemrum vakuummet på pumpesiden, rens systemet og check for aflejringer, vækst, utætheder og evt. filtre. Husk åben aldrig instrumentet uden strømmen er afbrudt, og strømkablet er taget ud!

EX Series, Handleiding voor snelle installatieprocedures

Installatie
Plaats het apparaat op een tafel of werkbank. Omgevingstemperaturen moeten liggen tussen de +10°C en +27°C.

Let erop dat de netspanning gelijk is aan het aangegeven voltage, +/- 10%.

De slangaansluitingen zijn bevestigd aan de achterkant van het apparaat en zijn voorzien van de labels PUMP INLET en PUMP OUTLET. Deze aansluitingen zijn 1/4 inch MPT. Verwijder de pluggen indien externe circulatie gewenst is. Bevestig de PUMP OUTLET aan de ingang van uw applicatie. Bevestig de PUMP INLET aan de uitgang van uw applicatie.

Vul nu het reservoir tot het niveau tussen de horizontale strepen op de roestvrij stalen scheidingsplaat, die de werkruimte van het pompgedeelte scheidt.

Gebruik nooit brandbare of andere koelvloeistoffen, die het toestel kunnen aantasten. Kraanwater wordt in het algemeen aanbevolen wanneer u bij temperaturen werkt van +8°C tot +80°C. Boven de + 80C. zal de gebruiker verantwoordelijk zijn voor de benodigde vloeistoffen. Indien men boven de 115°C. werkt, gelieve nooit puur ethylene glycol als badvloeistof te gebruiken.

Wanneer u wilt pompen naar een extern systeem, dient u altijd extra vloeistof achter de hand te houden om met juiste vloeistofniveau's zowel in het interne als het externe gedeelte van het systeem, te handhaven.

Gebruik het apparaat nooit wanneer het reservoir leeg is.

Operationeel gebruik
Alvorens het apparaat in gebruik te nemen, dient u eerst alle elektrische- en slangaansluitingen te controleren. Tevens dient u te controleren of het systeem gevuld is met vloeistof.

220 Volt apparaten hebben een z.g. "circuit breaker" aan de achterkant van het apparaat. Controleer of deze in werking is gesteld. Om het apparaat te starten, gelieve de I/O knop aan de zijkant van het apparaat te draaien naar de I positie. Het lampje zal oplichten als indicatie dat het systeem in werking is gesteld. Om het apparaat uit te zetten, gelieve de I/O knop naar de O positie te draaien.

Het "HEAT LED" duidt de actuele status van het verwarmings-element aan. Het zal oplichten indien het verwarmingselement in werking is gesteld. Als de ingestelde temperatuur de set-point heeft bereikt, zal de LED aan en uit gaan om het proces van de heater aan te duiden.

Analog Controller Temperature Adjustment
Om de temperatuur set-point aan te passen, draai de SETPOINT ADJUST knop aan de voorkant van het apparaat naar de gewenste temperatuur.

Digital Controller Temperature Adjustment
Om de temperatuur set-point af te kunnen lezen, houdt u de DISPLAY knop ingedrukt. Om de temperatuur set-point aan te passen, houdt u de DISPLAY knop ingedrukt en draait u de set-point set point knop, totdat de gewenste temperatuur set-point af te lezen is van de display. Als de set-point is aangepast, kunt u de DISPLAY knop weer loslaten. De display zal nu de temperatuur weergeven van de vloeistof in het reservoir.

Periodiek Onderhoud
Het reservoir dient regelmatig gecontroleerd te worden. Indien reiniging noodzakelijk is, zal het reservoir schoongespoeld moeten worden met een vloeistof, welke verenigbaar is met het systeem en de koelvloeistof.

Indien u meer informatie wenst, inclusief procedures in geval van problemen, kunt u de handleiding raadplegen of contact opnemen met de NESLAB service-afdeling: (+31) - 40 - 300066.

Kortfattad Bruksanvisning för EX Serie

Installation
Ställ maskinen på ett stadigt bord eller en bänk. Temperaturen i rummet bör vara mellan +50°F (10°C) och +80°F (27°C).

Försäkra att spänningen är den samma som den som är given i instruktionerna ± 10%.

Röranslutning finns på baksidan av maskinen och har följande beskrivning: SUPPLY och RETURN. Anslutningarna är 1/4 inch MPT. Ta bort de skyddande plast bitarna från röranslutningarna. Anslut SUPPLY kopplingen till intaget av din anordning och RETURN kopplingen till uttaget.

Lösgör skruvarna och ta bort luckan för att fylla tanken. Ta bort tank locket och fyll tanken med ren kylnings vätska.

Använd aldrig eldfarliga eller frätande vätskor. Kran vatten rekommenderas upp till +80°C. Över +80°C är användaren ansvarig för vilken vätska som används. Använd aldrig ren etylen glykol som vätska över 115°C.

Ha extra vätska redo om din anordning kräver det så att den rätta nivån behålls i cirkulations sytemet.

Användning
Kontrollera alla elektriska och alla rör anslutningar innan maskinen startas. Se till att cirkulations systemen har fyllts med vätska.

220V maskiner har en ström brytare på baksidan av maskinen. För att starta maskinen, sätt I/O knappen på sidan av maskinen på I. Lampan lyser för att visa att maskinen är på. Sätt knappen på O för att stänga av den.

Analog Kontroll, Temperatur Ändring

För att ändra den önskade förbestämda temperaturen, vrid °C knappen på framsidan av maskinen tills den önskade temperaturen är nådd.

Digital Kontroll, Temperatur Ändring
Håll Display knappen intryckt för att visa den önskade temperaturen. Håll Display knappen intryckt och vrid Adjust knappen för att ändra den önskade temperaturen. Släpp Display knappen efter att den önskade temperaturen visas på kontroll panelen. Temperaturen på vätskan i tanken visas nu på kontroll panelen.

Periodiskt Underhåll
Inspektera vätskan i tanken periodvis. Om det är nödvändigt med rengöring, spola tanken med en vätska som är förenlig med cirkulations sytemet och med kylvätskan.

NOTICE D'UTILISATION

BAINS EX

INSTALLATION
Placer l'appareil sur une table ou une paillasse suffisamment robuste. La température de la pièce doit être comprise entre 10 et 25°C.

S'assurer que l'alimentation électrique soit celle requise à ±10%.

Les connections sont situées à l'arrière de l'appareil et sont étiquetées " PUMP INLET " et " PUMP OUTLET ". Ces connections sont en inox d'un diamètre 3/8eme de pouce. Retirer les embouts en inox si vous souhaitez recirculer. Enficher le connecteur " PUMP OUTLET " à l'entrée de votre équipement et le connecteur " PUMP INLET " à la sortie.

Remplir le réservoir à un niveau compris entre les deux graduations " maxi " et " mini ".

Ne pas utiliser de liquide inflammable, corrosif, ou dont la viscosité serait inférieure à 50 centistokes aux températures les plus basses. Pour un fonctionnement jusqu'à 80°C, l'eau du robinet est la plus indiquée. En phase d'amorçage (au début de la recirculation), rajouter rapidement du liquide. Ne jamais l'utiliser sans liquide ou en dessous du niveau minimum.

Ces bains sont équipés d'un robinet de vidange situé à l'arrière.

MISE EN ROUTE
Vérifier les connections électriques, les tuyaux d'eau ainsi que le niveau de remplissage.

Les modèles en 220V ont un interrupteur général à l'arrière. Vérifier qu'il est sur " on ", placer l'interrupteur sur la position 1. La pompe, ainsi que le système de réfrigération se mettent en route. Le controleur de température numérique indique la température dans le bain. Pour éteindre, mettre l'interrupteur sur la position 0.

Le témoin lumineux " heat " indique que le bain fonctionne en mode " chauffage ". Quand la température approche de celle souhaitée, la diode s'éteint et s'allume.

REGLAGE DU CONTROLEUR DE TEMPERATURE ANALOGIQUE
Tourner le potentiomètre situé à l'avant jusqu'à ce que la température désirée coïncide avec la graduation.

REGLAGE DU CONTROLEUR DE TEMPERATURE NUMERIQUE
Pour afficher la température souhaitée, maintenir appuyé l'interrupteur et tourner le bouton de réglage jusqu'à ce que la température souhaitée soit affichée. Relâcher ensuite l'interrupteur. L'affichage indique alors la température du fluide dans le réservoir.

MAINTENANCE PREVENTIVE
Vérifier régulièrement le fluide dans le réservoir,

Changer de temps à autre le liquide utilisé,

En cas de nettoyage, rincer avec un produit de lavage compatible,

PROCEDIMIENTOS DE OPERACION DE REFERENCIA RAPIDA

PARA LA SERIE EX

INSTALACION

Sitúe la unidad sobre una mesa resistente o sobre un banco de trabajo. Las temperaturas ambientes deben estar dentro del rango de + 50 ºF a + 80 ºF.

Asegúrese de que el voltaje de la fuente de energía sea igual que el voltaje especificado, +/- 10%.

Las conexiones de tuberías están situadas en la parte trasera de la unidad y están marcadas como PUMP INLET y PUMP OUTLET. Estas conexiones son 1/4" MPT. Saque las tapas cuando requiera circulación externa. Conecte el adaptador PUMP OUTLET a la entrada de su aplicación. Conecte el adaptador PUMP INLET a la salida de su aplicación.

Llene el reservorio a un nivel entre los marcadores horizontales situados en la puerta de acero inoxidable que separa la zona de trabajo de la bomba.

No utilice nunca fluidos inflamables o corrosivos. Se recomienda utilizar agua corriente para operar a +80 ºC. Por encima de +80 ºC, el usuario es responsable de los fluidos que utilice. Por encima de 115 ºC no utilice nunca etileno glicol puro como fluido de baño.

Cuando bombee a un sistema externo, tenga fluido extra a mano para mantener el nivel apropiado tanto en las lineas circulantes como en el sistema externo.

Nunca haga funcionar el instrumento con el área de trabajo vacía.

OPERACION

Antes de poner en marcha la unidad, compruebe todas las conexiones eléctricas y de tuberías. Asegúrese de que el sistema circulador se ha llenado con fluido.

Las unidades de 220 V. tienen un cortador de circuito en la parte trasera de la unidad. Asegúrese de que está en posición ON. Para poner en marcha la unidad, ponga el interruptor I/O situado en el lateral de la unidad en posición I. La lámpara Power se iluminará para indicar que el sistema está funcionando. Para apagarlo, ponga el interruptor de encendido en posición O.

El LED HEAT indica la situación del sistema del calentador. Se ilumina para indicar que el calentador está funcionando. A medida que la temperatura de funcionamiento se aproxima al punto fijado, el LED ciclará para indicar el ciclo de trabajo del calentador.

AJUSTE DE LA TEMPERATURA CON EL CONTROLADOR ANALOGICO

Para fijar el punto de ajuste de la temperatura, gire el dial SETPOINT ADJUST situado en el frontal de la unidad hasta la temperatura deseada.

AJUSTE DE LA TEMPERATURA CON EL CONTROLADOR DIGITAL

Para que el punto de ajuste de temperatura aparezca en pantalla, mantenga presionado el interruptor DISPLAY. Para fijar el punto de ajuste de temperatura, mantenga presionado el interruptor DISPLAY y gire los botones SETPOINT ADJUST hasta que la pantalla digital indique el punto de ajuste de temperatura deseado. Una vez fijado el punto de ajuste, suelte el interruptor DISPLAY. La pantalla indicará la temperatura del fluido en el reservorio.

MANTENIMIENTO PERIODICO

Inspeccione periódicamente el fluido del reservorio. Si es necesaria una limpieza, rocíe el reservorio con un fluido de limpieza compatible con el sistema de circulación y el fluido recirculante.

Para una información completa, incluyendo solución de problemas, refiérase al manual de instrucciones o contacte con el Departamento de Servicio al Cliente en el teléfono 1-800-258-0830.

WARRANTY

NESLAB Instruments, Inc. warrants for 12 months from date of shipment any NESLAB unit according to the following terms.

Any part of the unit manufactured or supplied by NESLAB and found in the reasonable judgment of NESLAB to be defective in material or workmanship will be repaired at an authorized NESLAB Repair Depot without charge for parts or labor. The unit, including any defective part must be returned to an authorized NESLAB Repair Depot within the warranty period. The expense of returning the unit to the authorized NESLAB Repair Depot for warranty service will be paid for by the buyer. NESLAB's responsibility in respect to warranty claims is limited to performing the required repairs or replacements, and no claim of breach of warranty shall be cause for cancellation or recision of the contract of sales of any unit.With respect to units that qualify for field service repairs, NESLAB's responsibility is limited to the component parts necessary for the repair and the labor that is required on site to perform the repair. Any travel labor or mileage charges are the financial responsibility of the buyer.

The buyer shall be responsible for any evaluation or warranty service call (including labor charges) if no defects are found with the NESLAB product.

This warranty does not cover any unit that has been subject to misuse, neglect, or accident. This warranty does not apply to any damage to the unit that is the result of improper installation or maintenance, or to any unit that has been operated or maintained in any way contrary to the operating or maintenance instructions specified in NESLAB's Instruction and Operation Manual. This warranty does not cover any unit that has been altered or modified so as to change its intended use.

In addition, this warranty does not extend to repairs made by the use of parts, accessories, or fluids which are either incompatible with the unit or adversely affect its operation, performance, or durability.

NESLAB reserves the right to change or improve the design of any unit without assuming any obligation to modify any unit previously manufactured.

THE FOREGOING EXPRESS WARRANTY IS IN LIEU OF ALL OTHER WARRANTIES, EXPRESSED OR IMPLIED, INCLUDING BUT NOT LIMITED TO WARRANTIES OR MERCHANTABILITY AND FITNESS FOR A PARTICULAR PURPOSE.

NESLAB'S OBLIGATION UNDER THIS WARRANTY IS STRICTLY AND EXCLUSIVELY LIMITED TO THE REPAIR OR REPLACEMENT OF DEFECTIVE COMPONENT PARTS AND NESLAB DOES NOT ASSUME OR AUTHORIZE ANYONE TO ASSUME FOR IT ANY OTHER OBLIGATION.

NESLAB ASSUMES NO RESPONSIBILITY FOR INCIDENTAL, CONSEQUENTIAL, OR OTHER DAMAGES INCLUDING, BUT NOT LIMITED TO LOSS OR DAMAGE TO PROPERTY, LOSS OF PROFITS OR REVENUE, LOSS OF THE UNIT, LOSS OF TIME, OR INCONVENIENCE.

This warranty applies to units sold in the United States. Any units sold elsewhere are warranted by the affiliated marketing company of NESLAB Instruments, Inc. This warranty and all matters arising pursuant to it shall be governed by the law of the State of New Hampshire, United States. All legal actions brought in relation hereto shall be filed in the appropriate state or federal courts in New Hampshire, unless waived by NESLAB.

EX Series
Bath Circulators

Thermo NESLAB Manual P/N 000259
Rev. 10/26/00

Instruction and Operation Manual

EX-Series Bath Circulator
Table of Contents

PREFACE

Compliance 2
Unpacking 2
Warranty 2
NES-care 2
After-sale Support 2

SECTION I
Safety

Warnings 3

SECTION II
General Information

Description 4
Specifications 4

SECTION III
Installation

Site 6
Electrical Requirements 6
Plumbing Requirements 7
Fluids 9
Filling Requirements 9
Autorefill (Optional) 10

SECTION IV
Controllers

Controllers 11
Analog Controller 11
Digital Controller 12
Tap Water Cooling Coils 13
Boost Heater 13
High Temperature/Low Liquid Level Safety 14
15-pin Accessory Connector (Optional) 15

SECTION V
Maintenance

Service Contracts 16
Reservoir Cleaning 16
Algae 16

SECTION VI
Troubleshooting

Checklist 17
Service Assistance and Technical Support 17

SECTION VII
Programming Software

NEScom Programming Software 18

APPENDIX

International Quick Reference Guides

WARRANTY

Preface

Compliance

Products tested and found to be in compliance with the requirements defined in the EMC standards defined by 89/336/EEC as well as Low Voltage Directive (LVD) 73/23/EEC can be identified by the CE label on the rear of the unit. The testing has demonstrated compliance with the following directives:

LVD, 73/23/EEC	Complies with UL 3101-1:93
EMC, 89/336/EEC	EN 55011, Class A Verification EN 50082-1:1992 IEC 1000-4-2:1995 IEC 1000-4-3:1994 IEC 1000-4-4:1995

For any additional information refer to the Letter of Compliance that shipped with the unit (Declaration of Conformity).

Unpacking

Retain all cartons and packing material until the unit is operated and found to be in good condition. If the unit shows external or internal damage, or does not operate properly, contact the transportation company and file a damage claim. Under ICC regulations, this is your responsibility.

Warranty

Units have a warranty against defective parts and workmanship for one full year from date of shipment. See back page for more details.

NES-care Extended Warranty Contract

- Extend parts and labor coverage for an additional year.
- Worry-free operation.
- Control service costs.
- Eliminate the need to generate repair orders.
- No unexpected repair costs.

Other contract options are available. Please contact NESLAB for more information.

After-sale Support

Thermo NESLAB is committed to customer service both during and after the sale. If you have questions concerning the operation of your unit, contact our Sales Department. If your unit fails to operate properly, or if you have questions concerning spare parts or Service Contracts, contact our Customer Service Department. Before calling, please obtain the following information from the unit's serial number label:

- *BOM number* _____
- *Serial number* _____

Section I Safety

Warnings

Make sure you read and understand all instructions and safety precautions listed in this manual before installing or operating your unit. If you have any questions concerning the operation of your unit or the information in this manual, contact our Sales Department.

Performance of installation, operation, or maintenance procedures other than those described in this manual may result in a hazardous situation and may void the manufacturer's warranty.

Observe all warning labels.

Never remove warning labels.

Never operate damaged or leaking equipment.

Never operate the unit without bath fluid in the bath.

Never use pure ethylene glycol as a bath fluid. A minimum 80/20 mixture of Ethylene Glycol and tap water is allowed.

For 220 - 240 volt units supplied without a line cord, use a harmonized (HAR) grounded 3-conductor cord, type H05VV-F, with conductors listed below. A suitable cord end is required for connecting to the equipment (see unit socket) and must terminate with an IEC approved plug for proper connection to power supply.

NON-BOOST HEATER UNITS	**Nominal 1.0 mm^2 cross section rated 10 Amps**
	Unit Socket: IEC - 320 C13
BOOST HEATER UNITS	**Nominal 1.5 mm^2 cross section rated 16 Amps**
	Unit Socket: IEC - 320 C19

Always turn off the unit and disconnect the line cord from the power source before performing any service or maintenance procedures, or before moving the unit.

Always empty the bath before moving the unit.

Never operate equipment with damaged line cords.

Refer service and repairs to a qualified technician.

In addition to the safety warnings listed above, warnings are posted throughout the manual. These warnings are designated by an exclamation mark inside an equilateral triangle with text highlighted in bold print. Read and follow these important instructions. Failure to observe these instructions can result in permanent damage to the unit, significant property damage, personal injury or death.

Section II General Information

Description

The EX Series Bath Circulators are designed to provide temperature control for applications requiring a fluid work area or pumping to an external system.

The units consist of a circulation pump, stainless steel bath, a work area cover, and a temperature controller.

Specifications

	EX-111	EX-211
Temperature Range[1] *Analog controller* *Digital controller*	Ambient +3°C to +100°C Ambient +3°C to +150°C	
Temperature Stability[2] *Analog controller* *Digital controller*	±0.1°C ±0.01°C	
Pumping Capacity	15 lpm at 0' (0 M) 0 lpm at 16' (4.9 M)	
Heater *Watts* *50 Hz Models*	800 1000	
Bath Work Area (H x W x D) *Inches* *Centimeters*	4 3/4 x 8 x 6 12.1 x 20.3 x 15.2	9 1/4 x 10 x 6 23.5 x 25.4 x 15.2
Bath Volume *Liters*	7.0	12.25
Case Dimensions *(L x W x D)* *Inches* *Centimeters*	17 x 10 5/16 x 15 7/8 43.2 x 26.2 x 40.3	17 x 12 3/8 x 18 3/8 43.2 x 31.4 x 46.7
Power Requirements[3]	115 V, 60 Hz, 9 Amps 220/240 V, 50 Hz, 5.5 Amps	

1. Low-end temperature with tap water cooling. The controller may be set to -30°C, however to achieve temperatures below the specified range requires accessory cooling. Contact Thermo Neslab for more details.
2. Stability is a function of the bath fluid temperature. The use of a work area cover and tap water cooling may optimize bath stability for your work. For some applications, agitation and stability above ambient temperatures may be may be improved by connecting a small length of hose between the PUMP INLET and PUMP OUTLET connections on the rear of the unit.
3. Power Board Transformer Fuse–Analog T 0.5A 250V (Qty 1), Digital T 0.8A 250V (Qty 2) [T=Time Delay]

Specifications

	EX-221	EX-411	EX-511
Temperature Range[1] *Analog controller* *Digital controller*	Ambient +3°C to +100°C Ambient +3°C to +150°C		
Temperature Stability[2] *Analog controller* *Digital controller*	±0.1°C ±0.01°C		
Pumping Capacity	15 lpm at 0' (0 M) 0 lpm at 16' (4.9 M)		
Heater *Watts* *50 Hz Models*	800/800 boost 1000/800 boost	800 1000	800/800 boost 1000/800 boost
Bath Work Area *(H x W x D)* *Inches* *Centimeters*	9 1/4 x 10 x 9 23.5 x 25.4 x 22.9	19 1/4 x 10 x 6 48.9 x 25.4 x 15.2	16 1/4 x 10 x 12 41.3 x 25.4 x 30.5
Bath Volume *Liters*	20.5	22.0	41.5
Case Dimensions *(L x W x D)* *Inches* *Centimeters*	20 x 12 3/8 x 18 3/8 50.8 x 31.4 x 46.7	17 x 12 3/8 x 28 3/8 43.2 x 31.4 x 72.1	23 x 12 3/8 x 25 3/8 58.4 x 31.4 x 64.5
Power Requirements[3]	115 V, 60 Hz, 16 Amps 220/240 V, 50 Hz, 10 Amps	115 V, 60 Hz, 9 Amps 220/240 V, 50 Hz, 5.5 Amps	115 V, 60 Hz, 16 Amps 220/240 V, 50 Hz, 10 Amps

1. Low-end temperature with tap water cooling. The controller may be set to -30°C, however to achieve temperatures below the specified range requires accessory cooling. Contact Thermo Neslab for more details.
2. Stability is a function of the bath fluid temperature. The use of a work area cover and tap water cooling may optimize bath stability for your work. For some applications, agitation and stability above ambient temperatures may be may be improved by connecting a small length of hose between the PUMP INLET and PUMP OUTLET connections on the rear of the unit.
3. Power Board Transformer Fuse–Analog T 0.5A 250V (Qty 1), Digital T 0.8A 250V (Qty 2) [T=Time Delay]

Section III Installation

Site



Never place the unit in a location where excessive heat, moisture, or corrosive materials are present.

Lift the unit by grasping it under the case, near the rubber feet.

Locate the unit on a sturdy table or bench top. Ambient temperatures should be inside the range of +50°F to +80°F (+10°C to +27°C).

Electrical Requirements



Line voltage may be easily accessible inside the pump/control box. Always unplug the unit prior to removing pump/control box cover.

Refer to the serial number label on the rear of the unit to identify the specific electrical requirements of your unit.

Ensure the voltage of the power source meets the specified voltage, ±10%.

The unit construction provides extra protection against the risk of electric shock by grounding appropriate metal parts. The extra protection may not function unless the power cord is connected to a properly grounded outlet. It is the user's responsibility to assure a proper ground connection is provided.



For 220 - 240 volt units supplied without a line cord, use a harmonized (HAR) grounded 3-conductor cord, type H 0 5 V V - F , with conductors listed below. A suitable cord end is required for connecting to the equipment (see unit socket) and must terminate with an IEC approved plug for proper connection to power supply.

NON-BOOST HEATER UNITS	**Nominal 1.0 mm² cross section rated 10 Amps**
	Unit Socket: IEC - 320 C13
BOOST HEATER UNITS	**Nominal 1.5 mm² cross section rated 16 Amps**
	Unit Socket: IEC - 320 C19

Plumbing Requirements



Ensure the unit is off before connecting tubing to the unit.

To prevent damage to the plumbing lines, always support the ¾" fittings while installing/removing the pumping caps and lines.

Hose Connections

The pump connections are located at the rear of the pump box and are labelled PUMP INLET and PUMP OUTLET. These connections are bent upward so the recirculating fluid will drain back into the reservoir when the hoses are disconnected. The connections are capped with stainless steel serrated plugs.

The pump lines have ¼" MPT for mating with standard plumbing fittings. For your convenience two stainless steel adapters, ¼" FPT to ⅜" O.D. serrated fitting, are provided. (To assure proper fit, they should be installed using 1½ turns of Teflon® tape around the threads.)

Flexible tubing, if used, should be of heavy wall or reinforced construction. Make sure all tubing connections are securely clamped. Avoid running tubing near radiators, hot water pipes, etc. If substantial lengths of tubing are necessary, insulation may be required to prevent loss of cooling capacity.

Tubing and insulation are available from Thermo NESLAB. Contact our Sales Department for more information (see Preface, After-sale Support).

It is important to keep the distance between the unit and the external system as short as possible, and to use the largest diameter tubing practical. Tubing should be straight and without bends. If diameter reductions must be made, make them at the inlet and outlet of the external system, not at the unit.

If substantial lengths of cooling lines are required, they should be pre-filled with bath fluid before connecting them to the unit. This will ensure that a adequate amount of fluid will be in the bath once it is in operation.

Pumping

The pump is designed to deliver a flow of 15 liters/minute (4 gallons per minute) at 0 feet head. To prevent external circulation, the PUMP INLET and PUMP OUTLET lines are capped. The caps must be removed when external circulation is required.

To properly secure the external hose connections to the unit, wrap teflon tape around the pipe line threads before installation. Once the hose connections are made, the pump must be properly plumbed to an external system. *It is important the bath is not in operation until all plumbing is complete.*

If the bath is not used for external circulation, make sure the stainless steel caps are in place prior to operating the bath.

Circulating to an open container

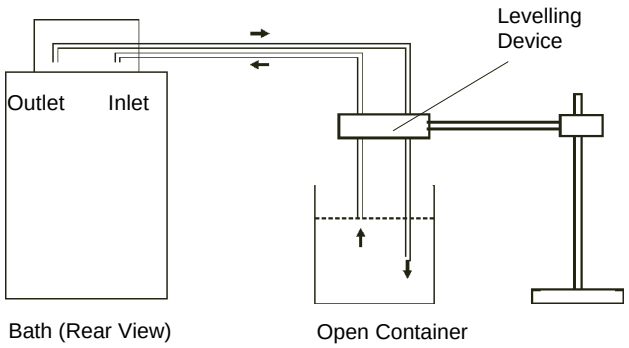

A stainless steel leveling device is available to aid circulation to an open vessel. Contact our Sales Department for more information (see Preface, After-sale Support).

Support the leveling device over the open container with a ringstand. Stagger the tubes in the leveling device so one tube is submerged in the vessel fluid, and the other tube is level with the fluid surface. Connect the deeper tube to the PUMP OUTLET and the shorter tube to the PUMP INLET.

Adjust the flow rate using the accessory flow control valve connected to the PUMP OUTLET, or by partially restricting the outlet tubing. When properly adjusted, the pump inlet will draw an occasional air bubble to prevent over flow, and the pump outlet will force fluid through the submerged tube to prevent aeration of the vessel.

To avoid siphoning the bath work area when the unit is shut off, lift the leveling device out of the vessel and above the level of the unit.

Circulating through two closed loops

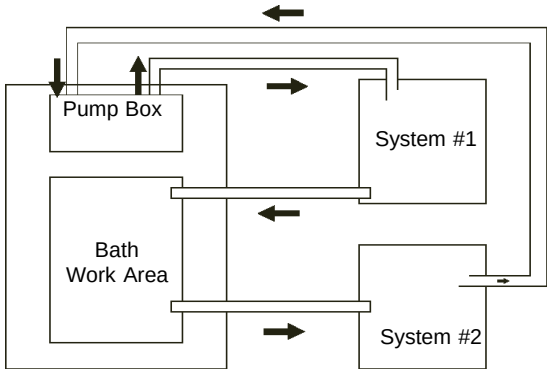

The pump can be used to circulate through two closed loop systems. Connect the shortest practical length of flexible tubing from the PUMP OUTLET to the inlet of external system #1. Connect the outlet of system #1 directly into the bath work area. Connect tubing from the bath work area to the inlet of system #2. Connect the outlet of system #2 to the PUMP INLET.

Drain



Ensure the temperature of the bath fluid is safe before draining the unit.

The unit is equipped with a drain located at the back of the unit at the base of the bath. The drain has ¼ inch male pipe threads and is capped with a stainless steel plug. To drain the reservoir simply remove the cap.

To assure proper fit when replacing the cap, be sure to line the threads with Teflon tape.

Fluids



Never use flammable or corrosive fluids with this unit.

Tap water is the recommended fluid for operation to +80°C.

Above +80°C, the user is responsible for fluids used.



Never use pure ethylene glycol as a bath fluid. A minimum 80/20 mixture of Ethylene Glycol and tap water is allowed.

Filling Requirements

The bath work area has a high and low level marker to guide filling. The markers are 1 inch horizontal slits located in the center of the stainless steel baffle separating the work area and the pump assembly. The correct fluid level falls between these two markers. The heating coils will be exposed and may become damaged if the correct fluid level is not provided.

When pumping to an external system, keep extra fluid on hand to maintain the proper level in both the circulating lines and external system.



Never run the unit when the work area is empty. Avoid overfilling. Overfilling the bath may damage the insulation and affects stability.

Autorefill (Optional)

An optional autorefill device is designed to maintain the correct level of fluid in the reservoir. The device consists of a float switch and a solenoid valve. If the fluid level falls, the float switch will open the solenoid valve and allow makeup fluid to fill the reservoir. Once the fluid reaches the proper level, the float switch will rise and the solenoid valve will close.

The plumbing connection for the autorefill device, labeled WATER INLET, is located on the rear of the autorefill assembly. The connection is 3/8 inch OD stainless steel. Remove the nut and install the tubing from your makeup fluid source. Reinstall the nut and tubing on to the connection.

Tubing is available from Thermo NESLAB. Contact our Sales Department for more information (see Preface, After-sale Support).

The autorefill device requires its own source of electrical power. The connector for the line cord (provided with the assembly) is also located on the rear of the autorefill device. The connector is labelled POWER.

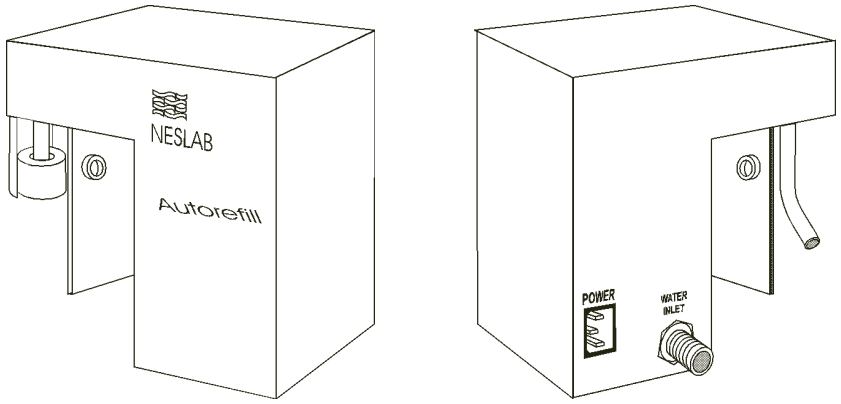

Autorefill Device

Section IV Controllers

Controllers

Two standard temperature controllers are available with the unit: Analog and Digital. This section explains the installation and operation of the controllers.

Analog

Start Up

Before starting the unit, check all electrical and plumbing connections and make sure the work area has been properly filled with bath fluid.

To start 115V units press the I/O switch on the side of the controller to the **I** (power on) position. The pump will start and the POWER LED will light.

220V units have a circuit breaker instead of a switch. The circuit breaker is labeled **I** (power on) and **O** (power off). Ensure the circuit breaker is in the **I** position.

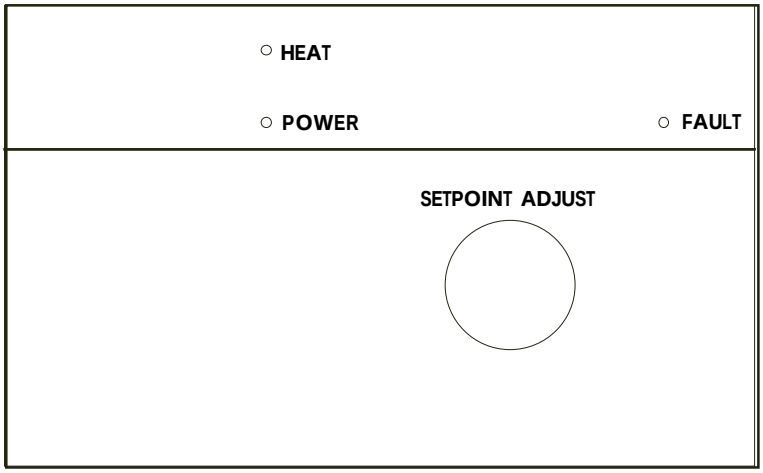

Analog Controller

The HEAT LED indicates the status of the heater. As the temperature of the fluid in the bath approaches the temperature setpoint, the lamp will cycle on and off to indicate the approximate duty cycle of the heater.

Temperature Adjustment

Units with Analog temperature controller are equipped with a glass tube thermometer. Insert the thermometer in the grommet located on the left side of the work area.

To adjust the bath temperature, turn the dial to the desired setpoint. Use the bath thermometer to make fine adjustments to the bath temperature.

Digital

Start Up

Before starting the unit, check all electrical and plumbing connections and make sure the work area has been properly filled with bath fluid.

To start 115V units press the I/O switch on the side of the controller to the **I** (power on) position. The pump will start and the POWER LED will light.

220V units have a circuit breaker instead of a switch. The circuit breaker is labeled **I** (power on) and **O** (power off). Ensure the circuit breaker is in the **I** position.

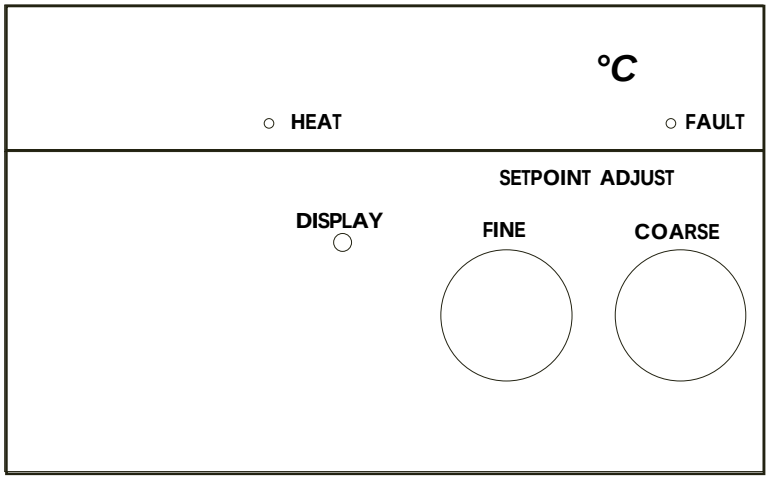

Digital Controller

The HEAT LED indicates the status of the heater. As the temperature of the fluid in the bath approaches the temperature setpoint, the lamp will cycle on and off to indicate the approximate duty cycle of the heater.

Temperature Adjustment

To display the temperature setpoint, press the DISPLAY switch. To adjust the setpoint, press and hold the DISPLAY switch and turn the COARSE and FINE dials until the temperature setpoint is indicated on the LED display.

NOTE: Inadvertent movement of the COARSE and FINE dials, regardless of the position of the DISPLAY switch, will result in a change of the setpoint. The change will not be immediately reflected on the LED display unless the DISPLAY switch is pressed. The display will eventually change as the unit responds to the new setpoint.

Tap Water Cooling Coils

The unit is equipped with a cooling coil located behind the stainless steel baffle in the bath. The bath can be cooled and temperature stability improved by circulating cold fluid through the coil. For best results, the fluid should be at least 5°C below the temperature setpoint. The required fluid flow rate depends on the type of fluid, the setpoint, and the desired stability.

The plumbing connections for the cooling coil are $^{3}/_{8}$ inch OD stainless steel tubes located on the rear of the unit. These connections will accept $^{3}/_{8}$ inch or $^{5}/_{16}$ inch ID tubing. Tubing is available from Thermo NESLAB.

Connect the COOLING COIL IN tube to the cold fluid source. Connect the COOLING COIL OUT tube to the cold fluid return (or drain if tap water is being used).

Boost Heater

EX-221 and EX-511 units are equipped with a boost heater. The boost heater is designed to provide additional heat to the unit.

To start the heater press the BOOST HEAT switch, located on the front of the temperature controller, to the ON position. Even though the switch automatically returns to the OFF position, the boost heater will start to function. (You can verify this by observing the fluid temperature rising.) The boost heater automatically ceases operation when the setpoint is reached.

High Temperature/ Low Liquid Level Safety

To protect your application, the adjustable High Temperature/Low Liquid Level Safety (HIGH TEMP/LOW LEVEL) ensures the heater will not exceed temperatures which can cause serious damage to your unit. A single temperature sensor, located on the heater coils in the bath, monitors both conditions. A High Temperature/Low Liquid Level fault occurs when the temperature of the sensor exceeds the set temperature limit.

In the event of a fault, the unit will shut down. The cause of the fault must be identified and corrected before the unit can be restarted.

The safety on single heater systems is not preset and must be adjusted during initial installation.

Units with a boost heater have an additional nonadjustable safety located behind the main safety. It has a red reset button but no adjustment knob.

To set the safety, locate the HIGH TEMP/LOW LEVEL SAFETY adjustment dial on the right side of the pump box. Turn the dial fully clockwise and press the red RESET switch. The RESET switch is located next to the adjustment dial. NOTE: For units without a reset switch turn the I/O switch off then back on.

Start the unit. Adjust the setpoint for a few degrees higher than the highest desired fluid temperature and allow the bath to stabilize at the temperature setpoint. Turn the HIGH TEMP/LOW LEVEL SAFETY dial counterclockwise until you hear a click and the unit shuts down. The red FAULT LED on the temperature controller will light to indicate a fault has occurred.

Cool the bath and then, without moving the adjustment dial, press the red RESET switch or turn the I/O switch off then back on.

NOTE: For units with a reset switch, the minimum high temperature safety setting is 50°C. For units without a reset switch the safety has a temperature range of 0°C to 180°C.

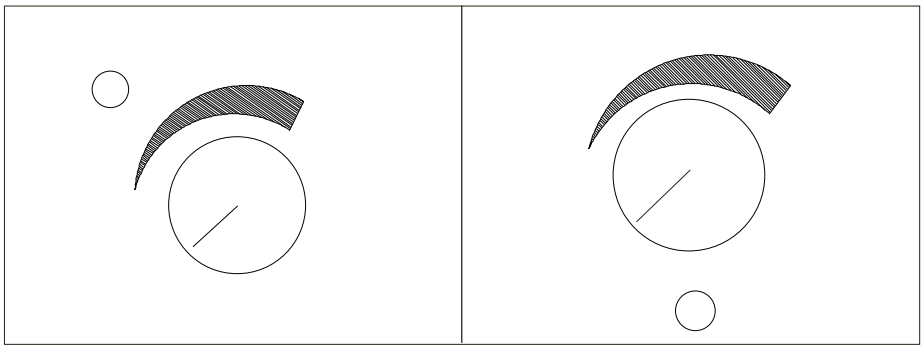

High Temperature/Low Liquid Level Safety (Typical)
(Some units do not have a reset switch.)

15-Pin Accessory Connector (Optional)

Digital units are equipped with a 15 pin D-subminiature female receptacle on the right side of the power box. An ENABLE/DISABLE switch is located just below the receptacle. Place the switch to the ENABLE position to control the bath via the receptacle connection. (The sensor temperature and setpoint, pin 7 and 8, can be read with the switch in either position.) The pin-out information is listed below.

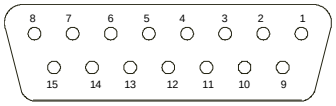

15 pin D-subminiature female receptacle

Pin #	Function
1	Chassis ground.
2	No connection.
3	Span +. Indicates the maximum setpoint value the unit can be set to operate. The temperature scale is 10mV/°C, referenced to analog ground, pin 6 (example: +350mV = +35.0°C).
4	Span -. Indicates the minimum setpoint value the unit can be set to operate. The temperature scale is 10mV/°C, referenced to analog ground, pin 6 (example: +50mV = +5.0°C).
5	No connection.
6	Analog ground. The analog ground is physically separated from the power ground throughout the unit. To prevent offsets that result from ground currents, the analog and power grounds are only connected at the unit's power supply. Analog ground should only be used as a reference pin.
7	Sensor temperature (current limited through 2.7K OHM resistor). The fluid temperature, as measured by the controller's sensor located in the reservoir, can be read at this pin. The temperature scale is 10mV/°C, referenced to analog ground, pin 6 (example: +150mV = +15.0°C).
8	Setpoint out. The present temperature setpoint can be read at this pin. The temperature scale is 10mV/°C, referenced to analog ground, pin 6 (example: +150mV = +15.0°C).
9	Power Ground.
10	No connection.
11	No connection.
12	Digital display (input only). An external voltage can be displayed on the operator panel digital display by applying the voltage to this pin. The display has a low input resistance and a full scale rating of ±1.99VDC. Input is referenced to analog ground, pin 6. The maximum voltage applied to the display should be limited to ±2VDC.
13	- 5V. Power supply of -5VDC (15mA maximum).
14	+5V. Power supply of +5VDC (50mA maximum).
15	Setpoint in. The temperature setpoint can be controlled by applying a known voltage to this pin. The temperature scale is 10mV/°C, referenced to analog ground, pin 6 (example: +230mV = +23.0°C).

NOTE: With the switch in the ENABLE position and no input to pin 15, the bath will slowly go to the setpoint value set on the digital controller.

Section V Maintenance



To avoid electrical shock, disconnect the mains cord prior to removing any access panels or covers.

Service Contracts

Thermo NESLAB offers on-site Service Contracts that are designed to provide extended life and minimal down-time for your unit. For more information, contact our Service Department (see Preface, After-sale Support).

Reservoir Cleaning

Routine cleaning can be achieved by simply sponging down the seamless stainless steel tank with tap water. (Dish washing detergent may be used but the tank must be thoroughly rinsed.)

To gain access to the entire reservoir the pump box and reservoir cover should be removed.

Remove the line cord from the rear of the unit.

Remove the four screws securing the reservoir's cover.

Carefully raise the controller and cover assembly to remove it from unit.

Place the cover on its side.

Algae

To restrict the growth of algae in the bath, we recommend the bath cover be kept in place and that all circulation lines be opaque. This will eliminate the entrance of light required for the growth of most common algae.

Thermo NESLAB also recommends the use of Chloramine-T, 1 gram per 3.8 liters.

Section VI Troubleshooting

Checklist

Unit will not start

Make sure the voltage of the power source meets the specified voltage, ±10%. Refer to the serial number label on the rear of the unit to identify the specific electrical requirements of your unit.

Check the High Temperature/Low Liquid Level Safety. If the FAULT light is on, make sure the fluid level in the bath is between the marks in the baffle and the HIGH TEMP/LOW LEVEL SAFETY setting is greater than the fluid temperature. Push the RESET switch(es) or, for units without a reset switch, turn the I/O switch off then back on and attempt to restart.

No external circulation

Make sure the stainless steel plugs on the PUMP INLET and PUMP OUTLET have been removed.

Check for obstructions, kinks, or leaks in the circulation tubing.

Circulation will cease when the pump head has been exceeded.

Service Assistance and Technical Support

If, after following these troubleshooting steps, your unit fails to operate properly, contact our Customer Service Department for assistance (see Preface, After-sale Support). Before calling, please obtain the following information:

Part number
Serial number
Voltage of unit
Voltage of power source

Our Service Department can provide you with a wiring diagram and a complete list of spare parts for your unit. Before calling, please obtain the following information:

Part number
Serial number

Section VII Programming Software

NEScom Software

The Thermo NESLAB Communications Software is a user friendly software that allows you to automate your temperature control process. The software includes a 3½" disk, Comprehensive Operator's Manual and a toll-free number to a trained technical staff.

NEScom Software allows you to write custom temperature programs for our Digital or Microprocessor based temperature control apparatus. Choose upper or lower temperature limits and monitor system status with an alarm. NEScom can also record your results on a user selectable graph. NesCom must be used with an IBM or 100% compatible computer.

Select from easy to use product icons.

Create graphs and charts.

Easily configure ramping functions which set the setpoint over time.

View pop-up alarm windows which display if an alarm condition occurred.

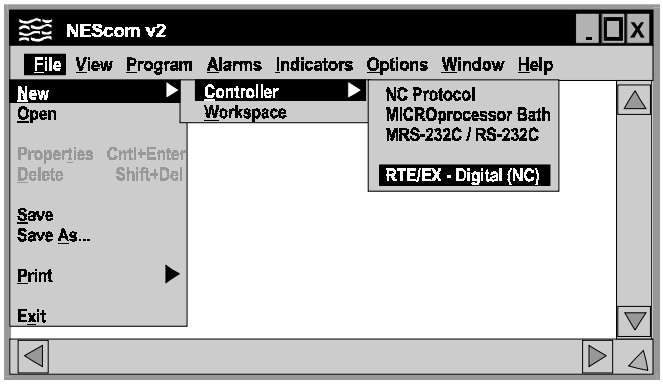

Select software functions from the easy to use pulldown menus.

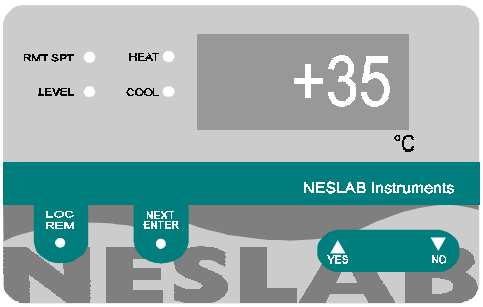

View a virtual controller screen which allows remote monitoring and operation of product control panel.

Appendix

International Quick Reference Guides

EX - Serie Kurzbedienungsanleitung

Installation
Stellen Sie das Gerät auf einen stabilen Tisch oder Labortisch. Die Umgebungstemperatur sollte zwischen +10 °C und +27 °C liegen.

Vergewissern Sie sich, daß die Spannung Ihrer Stromanschlüsse mit der für das Gerät vorgesehenen Spannung übereinstimmt (± 10%).

Die Schlauchanschlüsse (1/4 Zoll MPT) des Gerätes befinden sich an der Rückseite und sind mit PUMP INLET und PUMP OUTLET bezeichnet. Entfernen Sie die Kappen, falls externe Zirkulation gewünscht wird. Schließen Sie den PUMP OUTLET-Anschluß an den Eingang Ihres Instruments und den PUMP INLET-Anschluß an den Ausgang Ihres Instruments an.

Füllen Sie das Reservoir bis zu einem Stand, der zwischen den horizontalen Markierungen liegt, die auf dem Blech markiert sind, das den Arbeitsbereich von der Pumpeneinheit trennt.

Verwenden Sie niemals entflammbare oder Korrosion verursachende Flüssigkeiten. Für den Betrieb im Arbeits-Temperaturbereich bis +80°C empfiehlt Thermo NESLAB Leitungswasser. Oberhalb +80 °C ist der Anwender selbst für die verwendeten Flüssigkeiten verantwortlich. Über +115 °C dürfen Sie niemals pures Ethylenglykol als Badflüssigkeit verwenden.

Wenn sie zu einem externen System zirkulieren, sollten Sie zusätzliche Kühlflüssigkeit zur Hand haben, um den Kühlflüssigkeitsstand in den Zirkulationsleitungen und dem externen System beibehalten zu können.

Betreiben Sie das Gerät niemals mit leerem Arbeitsbereich!

Inbetriebnahme
Vor Inbetriebnahme des Gerätes vergewissern Sie sich bitte, daß die elektrischen Anschlüsse und die Rohr- u. Schlauchanschlüsse sachgemäß installiert sind und daß das gesamte System mit Kühlflüssigkeit gefüllt ist.

Geräte, die bei 220 Volt betrieben werden, verfügen über einen Stromkreisunterbrecher auf der Rückseite des Gerätes. Vergewissern Sie sich, daß dieser auf ON gestellt ist. Um das Gerät einzuschalten, müssen Sie den I/O-Schalter auf „I“ stellen. Die Power-Lampe leuchtet auf, wenn das Gerät in Betrieb ist. Um das Gerät abzuschalten, muß der I/O-Schalter auf „O“ gestellt werden.

Die HEAT-LED-Anzeige zeigt den Status des Heizelements an. Sie leuchtet auf, wenn das Heizelement arbeitet. Wenn die Arbeitstemperatur den gewünschten Setpoint erreicht, blinkt die LED-Anzeige, um den ungefähren Arbeitsrhythmus des Heizelements anzuzeigen.

Einstellung der Analog-Temperatursteuerung
Um die Temperatur einzustellen (setpoint), drehen Sie den SETPOINT ADJUST-Schalter an der Vorderseite des Gerätes auf die gewünschte Temperatur.

Einstellung der Digital-Temperatursteuerung
Um sich den Temperatur-Setpoint anzeigen zu lassen, drücken Sie den DISPLAY-Schalter und halten Sie ihn gedrückt. Um den Temperatur-Setpoint einzustellen, drücken Sie den Display-Schalter, halten diesen, und drehen gleichzeitig den SETPOINT ADJUST-Schalter so lange, bis die gewünschte Temperatur in der Digitalanzeige angezeigt wird. Wenn die Temperatur eingestellt ist, lassen Sie den Display-Schalter los. Die Digitalanzeige zeigt dann die Temperatur der Kühlflüssigkeit im Reservoir an.

Wartung
Überprüfen Sie das Reservoir regelmäßig. Sollte eine Säuberung notwendig sein, spülen Sie das Reservoir mit einer speziellen Reinigungsflüssigkeit, die mit dem Umlaufsystem und der Zirkulationsflüssigkeit kompatibel ist.

Für umfassende Informationen einschließlich Fehlerbeseitigungsmöglichkeiten schlagen Sie bitte in der Betriebsanleitung nach oder wenden Sie sich an unsere Service-Abteilung: 069/50 91 90 32.

EX Serie Kvik Referance

Installation:
Operationstemperatur ved 100% udnyttelse er fra stuetemperatur til+75^0 C under forudsætning af, at netspændingen er den nominelle 240V +/- 10%.

Tilslutning af slanger er på bagsiden mærket „PUMP INLET“ (ind) and „PUMP OUTLET“ (ud). Tilslutningerne er $^1/_4$" MPT-gevind.

Fyld resovoiret til mærket placeret på bafflen mellem arbejdsområdet og pumpeenheden.

Anvend aldrig brandbare væsker, rent ionbyttet eller dobbeltdestilleret vand kan anvendes op til +80^0 C, over denne temperatur anbefales specialvæsker.

Sørg altid for at den rette mængde væske er til stede i termostatkarret, og husk at kompensere for den væske, der medgår til ekstern cirkulation.

Betjening:
Før opstart checkes elektriske forbindelser, slangeforbindelser og kølevæske stand.
Check hovedkontakten på bagsiden af badet, og sørg for at den er tændt. Når badet skal startes trykkes I/O kontakten på siden i I position, og strømindikatoren tænder. Skal
badet slukkes, trykkes I/O kontakten i O stilling, og indikatoren slukker.

Dioden på frontpanelet angiver status på badet, der lyser ved opvarmning og
slukker, når den indstillede temperatur er nået.

Analog temperatur kontrol:
Drej ^{0}C tasten til den ønskede temperatur og lad systemet stabiliserer sig.

Digital temperatur kontrol:
Tryk på „DISPLAY“ tasten for at se den indstillede temperatur. Indstilling af ny temperatur, tryk på „DISPLAY“ og drej på „ADJUST“ indtil den rigtige temperatur vises, slip derefter „DISPLAY“ tasten. Skærmen vil nu vise den aktuelle temperatur i badet.

Periodisk vedligeholdelse:
Check standen af kølevæske periodisk. Før skift af væske indstilles temperaturen på „de-ice“. Check med mellemrum vakuummet på pumpesiden, rens systemet og check for aflejringer, vækst, utætheder og evt. filtre. Husk åben aldrig instrumentet uden strømmen er afbrudt, og strømkablet er taget ud!

EX Series, Handleiding voor snelle installatieprocedures

Installatie
Plaats het apparaat op een tafel of werkbank. Omgevingstemperaturen moeten liggen tussen de +10°C en +27°C.

Let erop dat de netspanning gelijk is aan het aangegeven voltage, +/- 10%.

De slangaansluitingen zijn bevestigd aan de achterkant van het apparaat en zijn voorzien van de labels PUMP INLET en PUMP OUTLET. Deze aansluitingen zijn 1/4 inch MPT. Verwijder de pluggen indien externe circulatie gewenst is. Bevestig de PUMP OUTLET aan de ingang van uw applicatie. Bevestig de PUMP INLET aan de uitgang van uw applicatie.

Vul nu het reservoir tot het niveau tussen de horizontale strepen op de roestvrij stalen scheidingsplaat, die de werkruimte van het pompgedeelte scheidt.

Gebruik nooit brandbare of andere koelvloeistoffen, die het toestel kunnen aantasten. Kraanwater wordt in het algemeen aanbevolen wanneer u bij temperaturen werkt van +8°C tot +80°C. Boven de + 80C. zal de gebruiker verantwoordelijk zijn voor de benodigde vloeistoffen. Indien men boven de 115°C. werkt, gelieve nooit puur ethylene glycol als badvloeistof te gebruiken.

Wanneer u wilt pompen naar een extern systeem, dient u altijd extra vloeistof achter de hand te houden om met juiste vloeistofniveau's zowel in het interne als het externe gedeelte van het systeem, te handhaven.

Gebruik het apparaat nooit wanneer het reservoir leeg is.

Operationeel gebruik
Alvorens het apparaat in gebruik te nemen, dient u eerst alle elektrische- en slangaansluitingen te controleren. Tevens dient u te controleren of het systeem gevuld is met vloeistof.

220 Volt apparaten hebben een z.g. "circuit breaker" aan de achterkant van het apparaat. Controleer of deze in werking is gesteld. Om het apparaat te starten, gelieve de I/O knop aan de zijkant van het apparaat te draaien naar de I positie. Het lampje zal oplichten als indicatie dat het systeem in werking is gesteld. Om het apparaat uit te zetten, gelieve de I/O knop naar de O positie te draaien.

Het "HEAT LED" duidt de actuele status van het verwarmings-element aan. Het zal oplichten indien het verwarmingselement in werking is gesteld. Als de ingestelde temperatuur de set-point heeft bereikt, zal de LED aan en uit gaan om het proces van de heater aan te duiden.

Analog Controller Temperature Adjustment
Om de temperatuur set-point aan te passen, draai de SETPOINT ADJUST knop aan de voorkant van het apparaat naar de gewenste temperatuur.

Digital Controller Temperature Adjustment
Om de temperatuur set-point af te kunnen lezen, houdt u de DISPLAY knop ingedrukt. Om de temperatuur set-point aan te passen, houdt u de DISPLAY knop ingedrukt en draait u de set-point set point knop, totdat de gewenste temperatuur set-point af te lezen is van de display. Als de set-point is aangepast, kunt u de DISPLAY knop weer loslaten. De display zal nu de temperatuur weergeven van de vloeistof in het reservoir.

Periodiek Onderhoud
Het reservoir dient regelmatig gecontroleerd te worden. Indien reiniging noodzakelijk is, zal het reservoir schoongespoeld moeten worden met een vloeistof, welke verenigbaar is met het systeem en de koelvloeistof.

Indien u meer informatie wenst, inclusief procedures in geval van problemen, kunt u de handleiding raadplegen of contact opnemen met de Thermo NESLAB service-afdeling: (+31) - 40 - 300066.

Kortfattad Bruksanvisning för EX Serie

Installation
Ställ maskinen på ett stadigt bord eller en bänk. Temperaturen i rummet bör vara mellan +50°F (10°C) och +80°F (27°C).

Försäkra att spänningen är den samma som den som är given i instruktionerna ± 10%.

Röranslutning finns på baksidan av maskinen och har följande beskrivning: SUPPLY och RETURN. Anslutningarna är 1/4 inch MPT. Ta bort de skyddande plast bitarna från röranslutningarna. Anslut SUPPLY kopplingen till intaget av din anordning och RETURN kopplingen till uttaget.

Lösgör skruvarna och ta bort luckan för att fylla tanken. Ta bort tank locket och fyll tanken med ren kylnings vätska.

Använd aldrig eldfarliga eller frätande vätskor. Kran vatten rekommenderas upp till +80°C. Över +80°C är användaren ansvarig för vilken vätska som används. Använd aldrig ren etylen glykol som vätska över 115°C.

Ha extra vätska redo om din anordning kräver det så att den rätta nivån behålls i cirkulations sytemet.

Användning
Kontrollera alla elektriska och alla rör anslutningar innan maskinen startas. Se till att cirkulations systemen har fyllts med vätska.

220V maskiner har en ström brytare på baksidan av maskinen. För att starta maskinen, sätt I/O knappen på sidan av maskinen på I. Lampan lyser för att visa att maskinen är på. Sätt knappen på O för att stänga av den.

Analog Kontroll, Temperatur Ändring

För att ändra den önskade förbestämda temperaturen, vrid °C knappen på framsidan av maskinen tills den önskade temperaturen är nådd.

Digital Kontroll, Temperatur Ändring
Håll Display knappen intryckt för att visa den önskade temperaturen. Håll Display knappen intryckt och vrid Adjust knappen för att ändra den önskade temperaturen. Släpp Display knappen efter att den önskade temperaturen visas på kontroll panelen. Temperaturen på vätskan i tanken visas nu på kontroll panelen.

Periodiskt Underhåll
Inspektera vätskan i tanken periodvis. Om det är nödvändigt med rengöring, spola tanken med en vätska som är förenlig med cirkulations sytemet och med kylvätskan.

NOTICE D'UTILISATION

BAINS EX

INSTALLATION
Placer l'appareil sur une table ou une paillasse suffisamment robuste. La température de la pièce doit être comprise entre 10 et 25°C.

S'assurer que l'alimentation électrique soit celle requise à ±10%.

Les connections sont situées à l'arrière de l'appareil et sont étiquetées " PUMP INLET " et " PUMP OUTLET ". Ces connections sont en inox d'un diamètre 3/8eme de pouce. Retirer les embouts en inox si vous souhaitez recirculer. Enficher le connecteur " PUMP OUTLET " à l'entrée de votre équipement et le connecteur " PUMP INLET " à la sortie.

Remplir le réservoir à un niveau compris entre les deux graduations " maxi " et " mini ".

Ne pas utiliser de liquide inflammable, corrosif, ou dont la viscosité serait inférieure à 50 centistokes aux températures les plus basses. Pour un fonctionnement jusqu'à 80°C, l'eau du robinet est la plus indiquée. En phase d'amorçage (au début de la recirculation), rajouter rapidement du liquide. Ne jamais l'utiliser sans liquide ou en dessous du niveau minimum.

Ces bains sont équipés d'un robinet de vidange situé à l'arrière.

MISE EN ROUTE
Vérifier les connections électriques, les tuyaux d'eau ainsi que le niveau de remplissage.

Les modèles en 220V ont un interrupteur général à l'arrière. Vérifier qu'il est sur " on ", placer l'interrupteur sur la position 1. La pompe, ainsi que le système de réfrigération se mettent en route. Le controleur de température numérique indique la température dans le bain. Pour éteindre, mettre l'interrupteur sur la position 0.

Le témoin lumineux " heat " indique que le bain fonctionne en mode " chauffage ". Quand la température approche de celle souhaitée, la diode s'éteint et s'allume.

REGLAGE DU CONTROLEUR DE TEMPERATURE ANALOGIQUE
Tourner le potentiomètre situé à l'avant jusqu'à ce que la température désirée coïncide avec la graduation.

REGLAGE DU CONTROLEUR DE TEMPERATURE NUMERIQUE
Pour afficher la température souhaitée, maintenir appuyé l'interrupteur et tourner le bouton de réglage jusqu'à ce que la température souhaitée soit affichée. Relâcher ensuite l'interrupteur. L'affichage indique alors la température du fluide dans le réservoir.

MAINTENANCE PREVENTIVE
Vérifier régulièrement le fluide dans le réservoir,

Changer de temps à autre le liquide utilisé,

En cas de nettoyage, rincer avec un produit de lavage compatible,

PROCEDIMIENTOS DE OPERACION DE REFERENCIA RAPIDA

PARA LA SERIE EX

INSTALACION

Sitúe la unidad sobre una mesa resistente o sobre un banco de trabajo. Las temperaturas ambientes deben estar dentro del rango de + 50 ºF a + 80 ºF.

Asegúrese de que el voltaje de la fuente de energía sea igual que el voltaje especificado, +/- 10%.

Las conexiones de tuberías están situadas en la parte trasera de la unidad y están marcadas como PUMP INLET y PUMP OUTLET. Estas conexiones son 1/4" MPT. Saque las tapas cuando requiera circulación externa. Conecte el adaptador PUMP OUTLET a la entrada de su aplicación. Conecte el adaptador PUMP INLET a la salida de su aplicación.

Llene el reservorio a un nivel entre los marcadores horizontales situados en la puerta de acero inoxidable que separa la zona de trabajo de la bomba.

No utilice nunca fluidos inflamables o corrosivos. Se recomienda utilizar agua corriente para operar a +80 ºC. Por encima de +80 ºC, el usuario es responsable de los fluidos que utilice. Por encima de 115 ºC no utilice nunca etileno glicol puro como fluido de baño.

Cuando bombee a un sistema externo, tenga fluido extra a mano para mantener el nivel apropiado tanto en las lineas circulantes como en el sistema externo.

Nunca haga funcionar el instrumento con el área de trabajo vacía.

OPERACION

Antes de poner en marcha la unidad, compruebe todas las conexiones eléctricas y de tuberías. Asegúrese de que el sistema circulador se ha llenado con fluido.

Las unidades de 220 V. tienen un cortador de circuito en la parte trasera de la unidad. Asegúrese de que está en posición ON. Para poner en marcha la unidad, ponga el interruptor I/O situado en el lateral de la unidad en posición I. La lámpara Power se iluminará para indicar que el sistema está funcionando. Para apagarlo, ponga el interruptor de encendido en posición O.

El LED HEAT indica la situación del sistema del calentador. Se ilumina para indicar que el calentador está funcionando. A medida que la temperatura de funcionamiento se aproxima al punto fijado, el LED ciclará para indicar el ciclo de trabajo del calentador.

AJUSTE DE LA TEMPERATURA CON EL CONTROLADOR ANALOGICO

Para fijar el punto de ajuste de la temperatura, gire el dial SETPOINT ADJUST situado en el frontal de la unidad hasta la temperatura deseada.

AJUSTE DE LA TEMPERATURA CON EL CONTROLADOR DIGITAL

Para que el punto de ajuste de temperatura aparezca en pantalla, mantenga presionado el interruptor DISPLAY. Para fijar el punto de ajuste de temperatura, mantenga presionado el interruptor DISPLAY y gire los botones SETPOINT ADJUST hasta que la pantalla digital indique el punto de ajuste de temperatura deseado. Una vez fijado el punto de ajuste, suelte el interruptor DISPLAY. La pantalla indicará la temperatura del fluido en el reservorio.

MANTENIMIENTO PERIODICO

Inspeccione periódicamente el fluido del reservorio. Si es necesaria una limpieza, rocíe el reservorio con un fluido de limpieza compatible con el sistema de circulación y el fluido recirculante.

Para una información completa, incluyendo solución de problemas, refiérase al manual de instrucciones o contacte con el Departamento de Servicio al Cliente en el teléfono 1-800-258-0830.

WARRANTY

Thermo NESLAB Instruments, Inc. warrants for 12 months from date of shipment any Thermo NESLAB unit according to the following terms.

Any part of the unit manufactured or supplied by Thermo NESLAB and found in the reasonable judgment of Thermo NESLAB to be defective in material or workmanship will be repaired at an authorized Thermo NESLAB Repair Depot without charge for parts or labor. The unit, including any defective part must be returned to an authorized Thermo NESLAB Repair Depot within the warranty period. The expense of returning the unit to the authorized Thermo NESLAB Repair Depot for warranty service will be paid for by the buyer. Thermo NESLAB's responsibility in respect to warranty claims is limited to performing the required repairs or replacements, and no claim of breach of warranty shall be cause for cancellation or recision of the contract of sales of any unit.With respect to units that qualify for field service repairs, Thermo NESLAB's responsibility is limited to the component parts necessary for the repair and the labor that is required on site to perform the repair. Any travel labor or mileage charges are the financial responsibility of the buyer.

The buyer shall be responsible for any evaluation or warranty service call (including labor charges) if no defects are found with the Thermo NESLAB product.

This warranty does not cover any unit that has been subject to misuse, neglect, or accident. This warranty does not apply to any damage to the unit that is the result of improper installation or maintenance, or to any unit that has been operated or maintained in any way contrary to the operating or maintenance instructions specified in Thermo NESLAB's Instruction and Operation Manual. This warranty does not cover any unit that has been altered or modified so as to change its intended use.

In addition, this warranty does not extend to repairs made by the use of parts, accessories, or fluids which are either incompatible with the unit or adversely affect its operation, performance, or durability.

Thermo NESLAB reserves the right to change or improve the design of any unit without assuming any obligation to modify any unit previously manufactured.

THE FOREGOING EXPRESS WARRANTY IS IN LIEU OF ALL OTHER WARRANTIES, EXPRESSED OR IMPLIED, INCLUDING BUT NOT LIMITED TO WARRANTIES OR MERCHANTABILITY AND FITNESS FOR A PARTICULAR PURPOSE.

Thermo NESLAB'S OBLIGATION UNDER THIS WARRANTY IS STRICTLY AND EXCLUSIVELY LIMITED TO THE REPAIR OR REPLACEMENT OF DEFECTIVE COMPONENT PARTS AND Thermo NESLAB DOES NOT ASSUME OR AUTHORIZE ANYONE TO ASSUME FOR IT ANY OTHER OBLIGATION.

Thermo NESLAB ASSUMES NO RESPONSIBILITY FOR INCIDENTAL, CONSEQUENTIAL, OR OTHER DAMAGES INCLUDING, BUT NOT LIMITED TO LOSS OR DAMAGE TO PROPERTY, LOSS OF PROFITS OR REVENUE, LOSS OF THE UNIT, LOSS OF TIME, OR INCONVENIENCE.

This warranty applies to units sold in the United States. Any units sold elsewhere are warranted by the affiliated marketing company of Thermo NESLAB Instruments, Inc. This warranty and all matters arising pursuant to it shall be governed by the law of the State of New Hampshire, United States. All legal actions brought in relation hereto shall be filed in the appropriate state or federal courts in New Hampshire, unless waived by Thermo NESLAB.

EX Series
Bath Circulators
Digital Controller

Thermo NESLAB Manual P/N U00480
Rev. 10/26/00

Instruction and Operation Manual

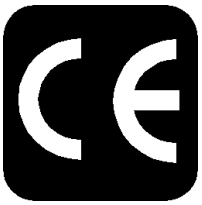

EX-Series Bath Circulator

Table of Contents

PREFACE

Compliance 2
Unpacking 2
Warranty 2
NES-care 2
After-sale Support 2

SECTION I
Safety

Warnings 3

SECTION II
General Information

Description 4
Specifications 4

SECTION III
Installation

Site 6
Electrical Requirements 6
Plumbing Requirements 7
Fluids 9
Filling Requirements 9
Water Quality Standards and Recommendations 10

SECTION IV
Temperature Controller

Start Up 11
Controller Keypad & Displays 11
Changing a Value 12
Controller Displays 12
Operator's Loop 13
Setup Loop 14
Error Messages 16
Tap Water Cooling Coils 16
Flow Control Valve (Optional) 16
Autorefill (Optional) 17
Sealable Bath Lid (Optional)` 17
High Temperature/Low Liquid Level Safety 18
9-pin Accessory Connectors 19
Analog Interface (Optional) 20

SECTION V
Maintenance

Service Contracts 21
Reservoir Cleaning 21
Algae 21
Additional Loops 22
Calibration Loop 23
Calibration Procedure 24

SECTION VI
Troubleshooting

Checklist 25
Service Assistance and Technical Support 25

SECTION VII
Programming Software/ RS232 Communication

NEScom 26

APPENDIX
Serial Communications Protocol

WARRANTY

Preface

Compliance

Products tested and found to be in compliance with the requirements defined in the EMC standards defined by 89/336/EEC as well as Low Voltage Directive (LVD) 73/23/EEC can be identified by the CE label on the rear of the unit. The testing has demonstrated compliance with the following directives:

LVD, 73/23/EEC	Complies with UL 3101-1:93
EMC, 89/336/EEC	EN 55011, Class A Verification EN 50082-1:1992 IEC 1000-4-2:1995 IEC 1000-4-3:1994 IEC 1000-4-4:1995

For any additional information refer to the Letter of Compliance that shipped with the unit (Declaration of Conformity).

Unpacking

Retain all cartons and packing material until the unit is operated and found to be in good condition. If the unit shows external or internal damage, or does not operate properly, contact the transportation company and file a damage claim. Under ICC regulations, this is your responsibility.

Warranty

Units have a warranty against defective parts and workmanship for one full year from date of shipment. See back page for more details.

NES-care Extended Warranty Contract

- Extend parts and labor coverage for an additional year.
- Worry-free operation.
- Control service costs.
- Eliminate the need to generate repair orders.
- No unexpected repair costs.

Other contract options are available. Please contact Thermo NESLAB for more information.

After-sale Support

Thermo NESLAB is committed to customer service both during and after the sale. If you have questions concerning the operation of your unit or the information in this manual, contact our Sales Department. If your unit fails to operate properly or if you have questions concerning spare parts or Service Contracts, contact our Service Department.

Before calling, please refer to the serial number label to obtain the following information:

- BOM number _____

- Serial number _____

- Software version (see page 22) _____

Section I Safety

Warnings

Make sure you read and understand all instructions and safety precautions listed in this manual before installing or operating your unit. If you have any questions concerning the operation of your unit or the information in this manual, contact our Sales Department.

Performance of installation, operation, or maintenance procedures other than those described in this manual may result in a hazardous situation and may void the manufacturer's warranty.

Observe all warning labels.

Never remove warning labels.

Never operate damaged or leaking equipment.

Never operate the unit without bath fluid in the bath.

Never use pure ethylene glycol as a bath fluid. Above 80°C the user is responsible for the fluid used.

For 220 - 240 volt units supplied without a line cord, use a harmonized (HAR) grounded 3-conductor cord, type H05VV-F, with conductors listed below. A suitable cord end is required for connecting to the equipment (see unit socket) and must terminate with an IEC approved plug for proper connection to power supply.

EX-111, EX-211, EX411	**Nominal 1.0 mm² cross section rated 10 Amps** **Unit Socket: IEC - 320 C13**
EX-221, EX-511	**Nominal 1.5 mm² cross section rated 16 Amps** **Unit Socket: IEC - 320 C19**

Always turn off the unit and disconnect the line cord from the power source before performing any service or maintenance procedures, or before moving the unit.

Always empty the bath before moving the unit.

Never operate equipment with damaged line cords.

Refer service and repairs to a qualified technician.



In addition to the safety warnings listed above, warnings are posted throughout the manual. These warnings are designated by an exclamation mark inside an equilateral triangle with text highlighted in bold print. Read and follow these important instructions. Failure to observe these instructions can result in permanent damage to the unit, significant property damage, personal injury or death.

Section II General Information

Description

The EX Series Bath Circulators are designed to provide temperature control for applications requiring a fluid work area or pumping to an external system.

The units consist of a circulation pump, stainless steel bath, a work area cover, and a digital temperature controller.

Specifications

	EX-111	EX-211
Temperature Range[1]	Ambient +15°C to +150°C	
Temperature Stability[2,3]	±0.01°C	
Pumping Capacity[2]	15 lpm at 0' (0 M) 0 lpm at 16' (4.9 M)	
Heater *Watts* *50 Hz Models*	800 1000	
Bath Work Area (H x W x D) *Inches* *Centimeters*	4 3/4 x 8 x 6 12.1 x 20.3 x 15.2	9 1/4 x 10 x 6 23.5 x 25.4 x 15.2
Bath Volume *Gallons/Liters*	1.9/7.2	3.2/12.1
Case Dimensions[4] *(L x W x D)* *Inches* *Centimeters*	17 x 10 5/16 x 15 7/8 43.2 x 26.2 x 40.3	17 x 12 3/8 x 18 3/8 43.2 x 31.4 x 46.7
Power Requirements[5]	115 V, 60 Hz 220 V, 50 Hz	

1. Low-end temperature with tap water cooling. The controller may be set to -30°C, however to achieve temperatures below the specified range requires accessory cooling. Contact Thermo Neslab for more details.
2. Stability and pump specifications using water, other specifications determined using fluid with specific heat of 0.35, ambient 20°C.
3. Stability is a function of the bath fluid temperature. The use of a work area cover and tap water cooling may optimize bath stability for your work. For some applications, agitation and stability above ambient temperatures may be improved by connecting a small length of hose between the PUMP INLET and PUMP OUTLET connections on the rear of the unit.
4. Add 1½ inches (3.8 centimeters) to depth for plumbing connections.
5. Control transformer fusing - 115VAC units = [T=Time Delay] 500mA 250V 5 x 20mm (Qty 1), 220VAC units = [T=Time Delay] 250mA 250V 5 x 20mm (Qty 2).
   Bussman fusing part numbers: 500mA fuse = Bussman S504-500mA
   250mA fuse = Bussman S504-250mA

Specifications

	EX-221	EX-411	EX-511
Temperature Range[1]	Ambient +15°C to +150°C		
Temperature Stability[2,3]	±0.01°C		
Pumping Capacity[3]	15 lpm at 0' (0 M) 0 lpm at 16' (4.9 M)		
Heater *Watts* *50 Hz Models*	1600 1800	800 1000	1600 1800
Bath Work Area *(H x W x D)* *Inches* *Centimeters*	9 1/4 x 10 x 9 23.5 x 25.4 x 22.9	19 1/4 x 10 x 6 48.9 x 25.4 x 15.2	16 1/4 x 10 x 12 41.3 x 25.4 x 30.5
Bath Volume *Gallons/Liters*	5.4/20.4	5.8/22.0	11.0/41.6
Case Dimensions[4] *(L x W x D)* *Inches* *Centimeters*	20 x 12 3/8 x 18 3/8 50.8 x 31.4 x 46.7	17 x 12 3/8 x 28 3/8 43.2 x 31.4 x 72.1	23 x 12 3/8 x 25 3/8 58.4 x 31.4 x 64.5
Power Requirements[5]	115 V, 60 Hz 220 V, 50 Hz		

1. Low-end temperature with tap water cooling. The controller may be set to -30°C, however to achieve temperatures below the specified range requires accessory cooling. Contact Thermo Neslab for more details.
2. Stability and pump specifications using water, other specifications determined using fluid with specific heat of 0.35, ambient 20°C.
3. Stability is a function of the bath fluid temperature. The use of a work area cover and tap water cooling may optimize bath stability for your work. For some applications, agitation and stability above ambient temperatures may be improved by connecting a small length of hose between the PUMP INLET and PUMP OUTLET connections on the rear of the unit.
4. Add 1½ inches (3.8 centimeters) to depth for plumbing connections.
5. Control transformer fusing - 115VAC units = [T=Time Delay] 500mA 250V 5 x 20mm (Qty 1), 220VAC units = [T=Time Delay] 250mA 250V 5 x 20mm (Qty 2).
   Bussman fusing part numbers: 500mA fuse = Bussman S504-500mA
   250mA fuse = Bussman S504-250mA

Section III Installation

Site



Never place the unit in a location where excessive heat, moisture, or corrosive materials are present.

Lift the unit by grasping it under the case, near the rubber feet.

Locate the unit on a sturdy table or bench top. Ambient temperatures should be inside the range of +50°F to +80°F (+10°C to +27°C).

Electrical Requirements



Line voltage may be easily accessible inside the pump/control box. Always unplug the unit prior to removing pump/control box cover.

Refer to the serial number label on the rear of the unit to identify the specific electrical requirements of your unit.

Ensure the voltage of the power source meets the specified voltage, ±10%.

The unit construction provides extra protection against the risk of electric shock by grounding appropriate metal parts. The extra protection may not function unless the power cord is connected to a properly grounded outlet. It is the user's responsibility to assure a proper ground connection is provided.



For 220 - 240 volt units supplied without a line cord, use a harmonized (HAR) grounded 3-conductor cord, type H 0 5 V V - F , with conductors listed below. A suitable cord end is required for connecting to the equipment (see unit socket) and must terminate with an IEC approved plug for proper connection to power supply.

EX-111, EX-211, EX-411	**Nominal 1.0 mm² cross section rated 10 Amps**
	Unit Socket: IEC - 320 C13
EX-221, EX-511	**Nominal 1.5 mm² cross section rated 16 Amps**
	Unit Socket: IEC - 320 C19

Plumbing Requirements



Ensure the unit is off before connecting tubing to the unit.

To prevent damage to the plumbing lines, always support the ¾" fittings while installing/removing the pumping caps and lines.

Hose Connections

The pump connections are located at the rear of the pump box and are labelled PUMP INLET and PUMP OUTLET. These connections are bent upward so the recirculating fluid will drain back into the reservoir when the hoses are disconnected. The connections are capped with stainless steel serrated plugs.

The pump lines have ¼" MPT for mating with standard plumbing fittings. For your convenience two stainless steel adapters, ¼" FPT to ⅜" O.D. serrated fitting, are provided. (To assure proper fit, they should be installed using 1½ turns of Teflon® tape around the threads.)

Flexible tubing, if used, should be of heavy wall or reinforced construction. Make sure all tubing connections are securely clamped. Tubing and insulation are available from Thermo NESLAB. Contact our Sales Department for more information (see Preface, After-sale Support).

It is important to keep the distance between the unit and the external system as short as possible, and to use the largest diameter tubing practical. Tubing should be straight and without bends. If diameter reductions must be made, make them at the inlet and outlet of the external system, not at the unit.

If substantial line lengths are required, they should be pre-filled with bath fluid before connecting them to the unit. This will ensure that a adequate amount of fluid will be in the bath once it is in operation.

Pumping

The pump is designed to deliver a flow of 15 liters/minute (4 gallons per minute) at 0 feet head. To prevent external circulation, the PUMP INLET and PUMP OUTLET lines are capped. The caps must be removed when external circulation is required.

To properly secure the external hose connections to the unit, wrap Teflon® tape around the pipe line threads before installation. Once the hose connections are made, the pump must be properly plumbed to an external system. *It is important the bath is not in operation until all plumbing is complete.*

If the bath is not used for external circulation, ensure the stainless steel caps are in place prior to operating it.

NOTE: To increase agitation in the bath when not circulating externally, connect a short loop of hose between the inlet and outlet lines.

Circulating to an open container

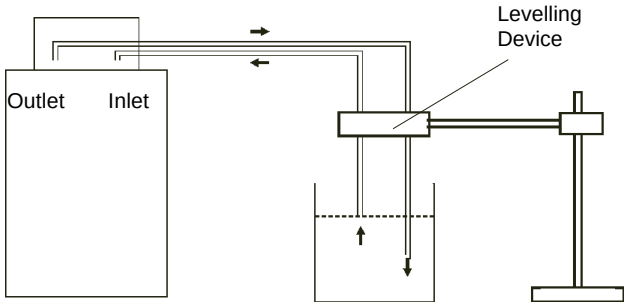

Bath (Rear View) Open Container

A stainless steel leveling device is available to aid circulation to an open vessel. Contact our Sales Department for more information (see Preface, After-sale Support).

Support the leveling device over the open container with a ringstand. Stagger the tubes in the leveling device so one tube is submerged in the vessel fluid, and the other tube is level with the fluid surface. Connect the deeper tube to the PUMP OUTLET and the shorter tube to the PUMP INLET.

Adjust the flow rate using the accessory flow control valve connected to the PUMP OUTLET, or by partially restricting the outlet tubing. When properly adjusted, the pump inlet will draw an occasional air bubble to prevent over flow, and the pump outlet will force fluid through the submerged tube to prevent aeration of the vessel.

To avoid siphoning the bath work area when the unit is shut off, lift the leveling device out of the vessel and above the level of the unit.

Circulating through two closed-loops

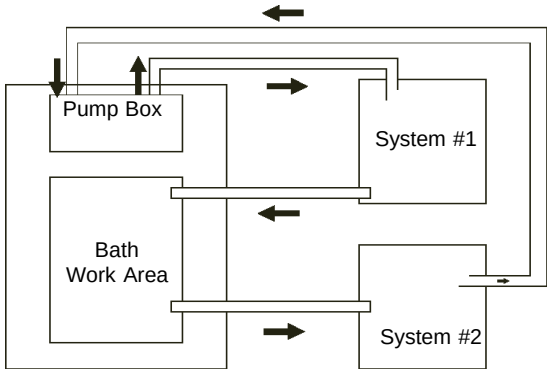

Bath (Top View)

The pump can be used to circulate through two closed-loop systems. Connect the shortest practical length of flexible tubing from the PUMP OUTLET to the inlet of external system #1. Connect the outlet of system #1 directly into the bath work area. Connect tubing from the bath work area to the inlet of system #2. Connect the outlet of system #2 to the PUMP INLET.

Drain



Ensure the temperature of the bath fluid is safe before draining the unit.

The unit is equipped with a drain located at the back of the unit at the base of the bath. The drain has ¼ inch male pipe threads and is capped with a stainless steel plug. To drain the reservoir simply remove the cap.

To assure proper fit when replacing the cap, be sure to line the threads with Teflon® tape.

Fluids



Never use flammable or corrosive fluids with this unit.

Filtered tap water is the recommended fluid for operation to +80°C. See Water Quality Standards and Recommendations on the next page.



Never use pure ethylene glycol as a bath fluid. Above 80°C the user is responsible for the fluid used.

Filling Requirements

The bath work area has a high and low level marker to guide filling. The markers are 1 inch horizontal slits located in the center of the stainless steel baffle separating the work area and the pump assembly. The correct fluid level falls between these two markers. The heating coils will be exposed and may become damaged if the correct fluid level is not provided.

When pumping to an external system, keep extra fluid on hand to maintain the proper level in both the circulating lines and external system.



Never run the unit when the work area is empty. Avoid overfilling. Overfilling the bath may damage the insulation and affects stability.

Water Quality Standards and Recommendations

	Permissible (PPM)	Desirable (PPM)
Microbiologicals		
(algae, bacteria, fungi)	0	0
Inorganic Chemicals		
Calcium	<40	0.6
Chloride	250	<25
Copper	1.3	1.0
Iron	0.3	<0.1
Lead	0.015	0
Magnesium	<12	0.1
Manganese	0.05	<0.03
Nitrates\Nitrites	10 as N	0
Potassium	<20	0.3
Silicate	25	<1.0
Sodium	<20	0.3
Sulfate	250	<50
Hardness	17	<0.05
Total Dissolved Solids	50	10
Other Parameters		
pH	6.5-8.5	7-8
Resistivity	0.01*	0.05-0.1*

* Megohm-Cm (Compensated to 25°C)

Unfavorably high total ionized solids (TIS) can accelerate the rate of galvanic corrosion. These contaminants can function as electrolytes which increase the potential for galvanic cell corrosion and lead to localized corrosion such as pitting which can be observed at the studs and on the outside surface of cooling coils. Eventually, the pitting will become so extensive that the coil will leak refrigerant into the water reservoir.

For example, raw water in the U.S. averages 171 ppm (of NaCl). The recommended level for use in a water system is between 0.5 to 5.0 ppm (of NaCl).

Recommendation: Initially fill the tank with distilled/deionized water. Do not use untreated tap water; as the total ionized solids level may be too high.

Maintain this water quality at a resistivity of between 1 to 10 megohm-cm (compensated to 25°C) by using a purification system. Although the initial fill may be as high as 10 megohm-cm (compensated to 25°C), the desired level for long time usage is 1 to 3 megohm-cm (compensated to 25°C).

The above two recommendations will reduce the electrolytic potential of the water and prevent or reduce the galvanic corrosion observed.

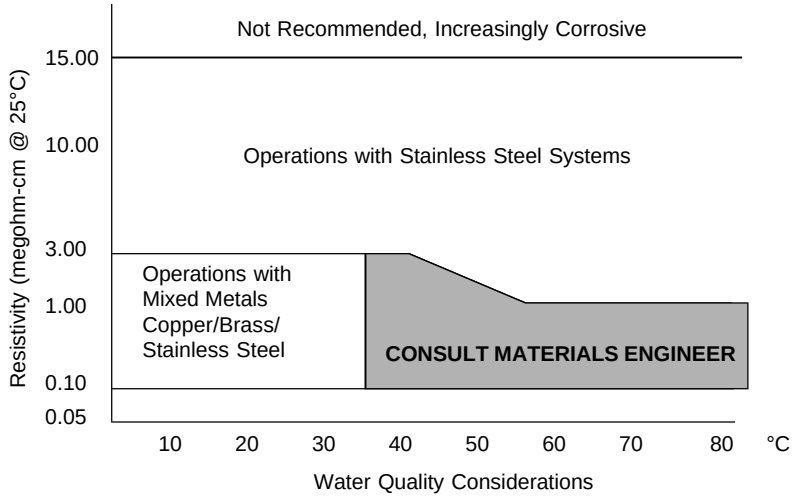

Section IV Digital Temperature Controller

Start Up

Before starting the unit, check all electrical and plumbing connections and make sure the work area has been properly filled with bath fluid.

To start the bath place the I/O circuit breaker on the side of the control box to the **I** (power on) position. The pump will start and the controller will display the temperature of the fluid in the reservoir

The digital controller controls temperature using a PID (Proportional-Integral-Derivative) algorithm. It is designed with self-diagnostic features and easy to use operator interface.

Controller Keypad & Display

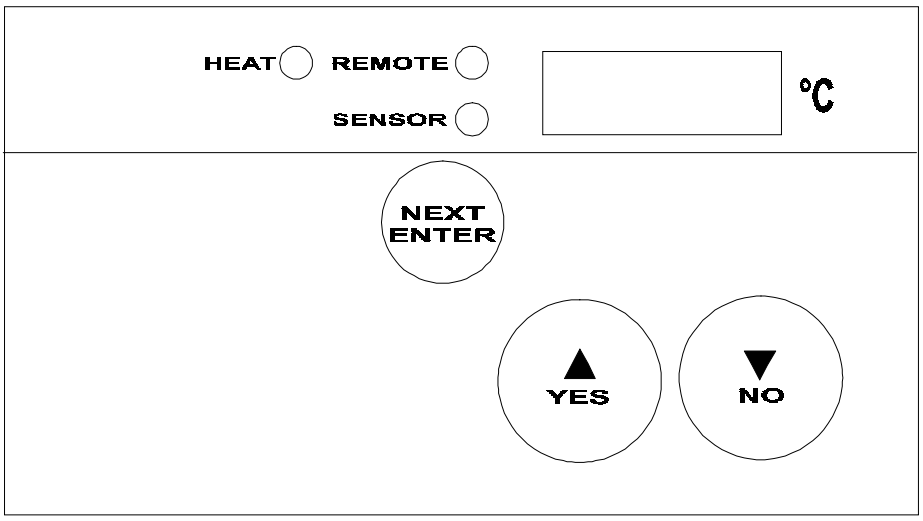

The HEAT indicator is lit when the heater is on. The heat indicator flashes when the heater is pulsating.

The REMOTE indicator illuminates whenever the unit is configured to accept a remote setpoint. The controller's SENSOR indicator illuminates whenever the remote sensor is selected. See Controller Displays on the next page for information on the °C display.

NEXT ENTER
Use this key to scroll forward through the menus and also to accept and save changes.

YES, ▲
This dual purpose key is used to answer Yes to Y/N questions or to increment numerical values upward for setting numeric values.

NO, ▼
This dual purpose key is used to answer No to Y/N questions or to decrement numerical values downward for setting numeric values.

Changing a Value

The **YES** key increments the value. The **NO** key decrements the value.

The display will flash as soon as either key is depressed, and will continue to flash until the **NEXT ENTER** key is pressed twice to accept the new value.

The new value will not be used by the controller until the **NEXT ENTER** key is depressed twice and the display stops flashing.

NOTE: If the **NEXT ENTER** key is not depressed twice within ten seconds, the controller will time out and the new value will not be accepted. The controller will revert to the previous setpoint value.

The controller will not allow you to enter a value above the maximum (+150°C) or below the minimum (+15°C).

Controller Displays

An alphanumeric display presents numeric readings of various operating conditions within the bath. Display function is selected by pressing the appropriate keys to move through a menu of available information.

When the controller is first powered up it performs a quick self-test then enters the Operator's Loop. The Operator's Loop displays the bath temperature and is used to change the setpoint, see page 13. The Setup Loop can be accessed from the Operator's Loop by pressing and holding the key combinations shown on Figure 1 on the next page. The Setup Loop is used to adjust the controller's PID parameters, select either the internal or optional external sensor, and set the high/low temperature limits. It is also used to select RS232 parameters and display the unit's identification number. See pages 14-15.

Operator's Loop

When the controller is first powered up it enters the Operator's Loop, displaying reservoir fluid temperature. Press the NEXT ENTER key to view the setpoint.

SP displays the controller setpoint. The display will flash between SP and the actual setpoint number. Use the YES/NO keys to change the setpoint value. Once the desired setpoint is displayed, press the NEXT ENTER key twice.

NOTE: If the bath is controlled via RS232 communications, the setpoint can not be changed from the keypad.

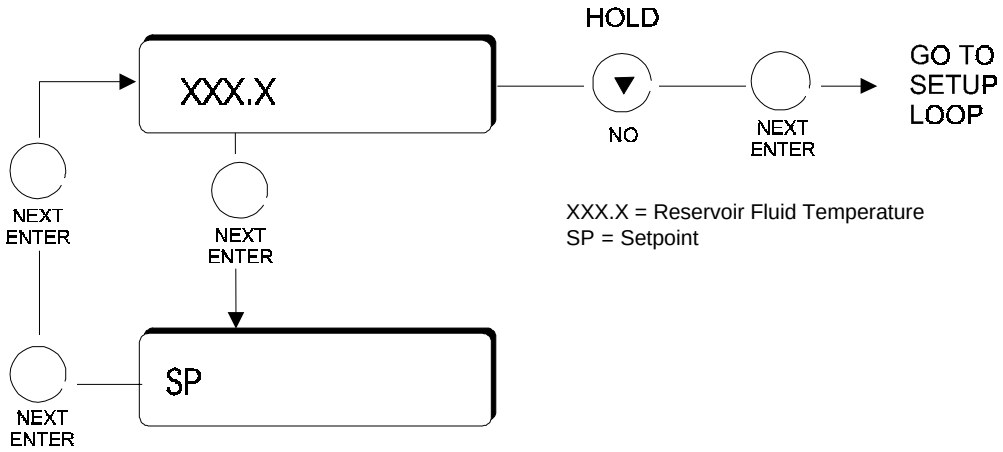

Figure 1 Operator's Loop

Setup Loop

The Setup Loop is used to adjust the controller's PID parameters; select either the internal(1) or optional extenal(2) sensor; set the high/low temperature limits; select RS232 parameters; and to display the unit's ID number.

Enter the Setup Loop from the Operator's Loop by pressing and holding the NO key then press the NEXT ENTER key. Use the YES/NO keys to adjust the values. Press the NEXT ENTER key twice to accept the new value.

While in the Setup Loop, if any key is not pressed during a one minute time span, the controller will automatically return to the Operator's Loop temperature display.

NOTE: If the unit exceeds either temperature limit, the appropriate error message will flash, see page 16. The unit will not shut down (unless the temperature exceeds the high temperature safety setting, see page 18). You will also receive an error code if the optional external sensor is selected but it is not installed.

tUnE = Tune
HEAt = Heat PID Parameters
Pro = Proportional Band (factory value 1.5%)
Int = Integral (factory value 0.75 repeats per minute)
dEr = Derivative (factory value 0.05 minutes)
rtd = Sensor
1 = Internal
2 = External
SP = Setpoint source (optional display see page 20)
Hit = High Temperature Limit

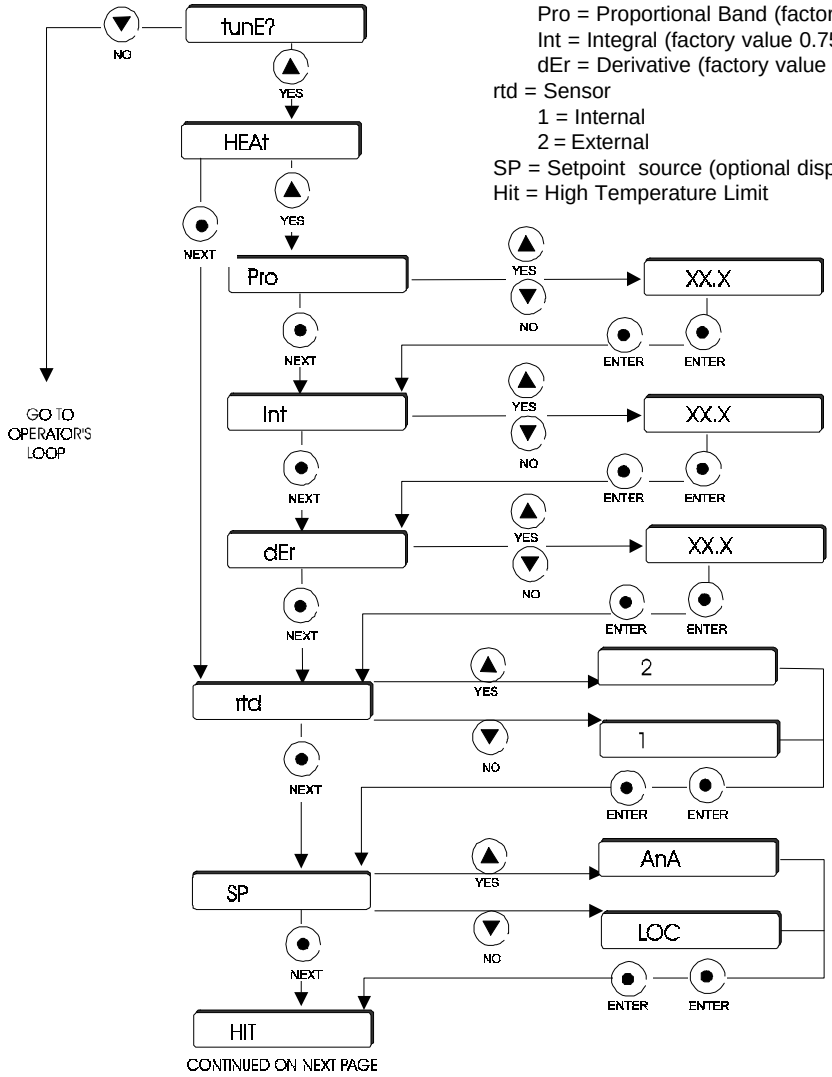

Optional. Selecting Analog Input (AnA) as the mode of temperature control overrides both manual input from the keypad, and any serial communication input.

Figure 2 Setup Loop (1 of 2)

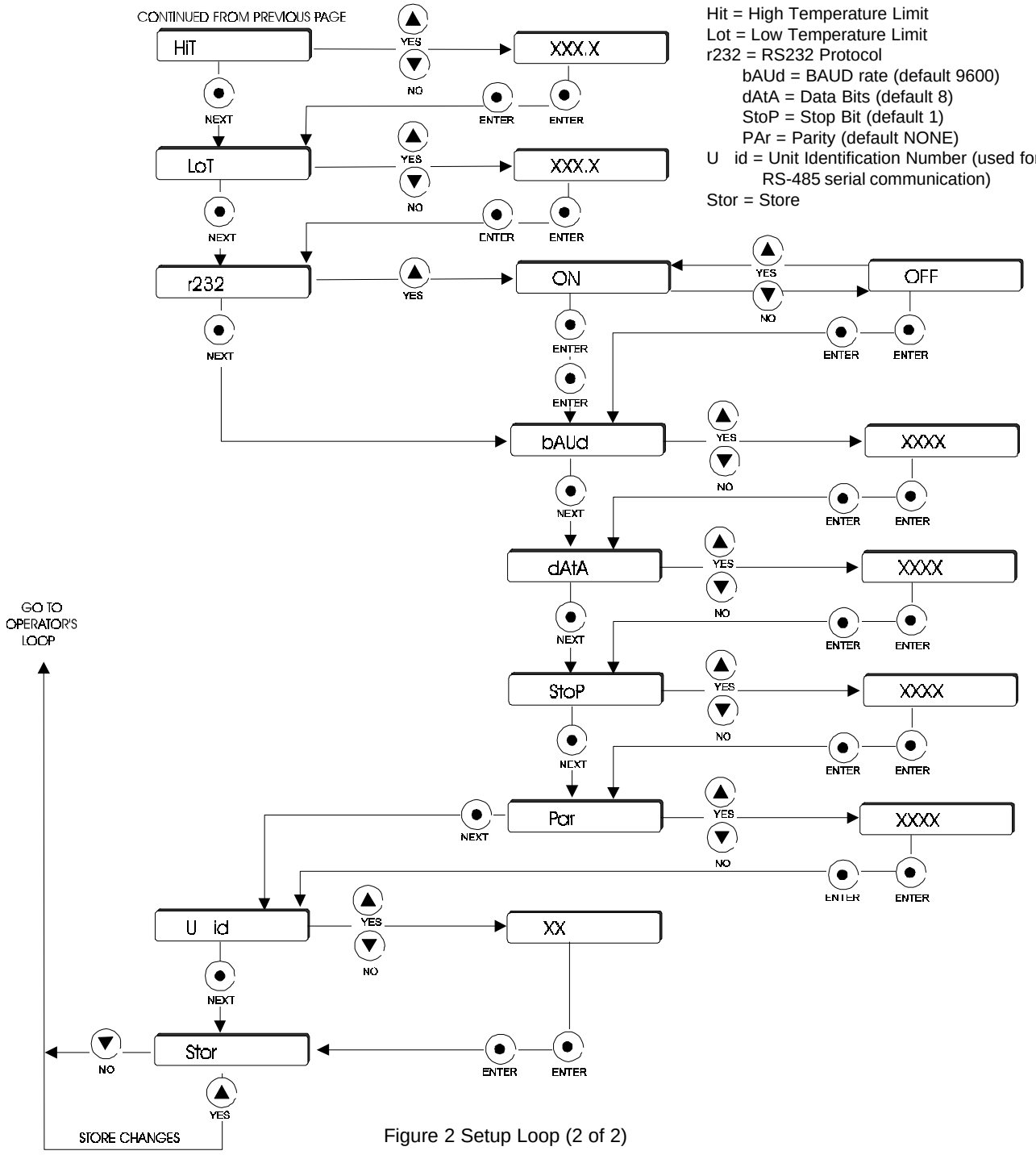

Figure 2 Setup Loop (2 of 2)

NOTE: To save *all* changes, when the display reads **Stor** press **YES**. Should you desire to return to the temperature display and abort *all* changes, when the display reads **Stor** press **NO.**

Error Messages

Error	Action
Er00:	ROM Checksum
Er01:	RAM Test Failed
Er02:	Keypad Test Failed
Er04-13:	Interrupt Error
Er14:	Synchronous Error
Er15:	Asychronous Error
Er16:	Bad Calibration
LoT:	Low Temp Limit
HiT:	High Temp Limit
Er23:	RTD2 Shorted
Er24:	RTD2 Open/Not Installed
Er25:	RTD1 Shorted
Er26:	RTD1 Open
HTC:	High Temperature Cutout
PrES:	Pressure Cutout

NOTE: HTC and PrES are optional displays available only on specially modified units. Errors 00 through 15 will lockup the controller keypad. Errors 00 through 03 may be cleared by depressing the NEXT ENTER key.

Tap Water Cooling Coils

The unit is equipped with a cooling coil located behind the stainless steel baffle in the bath. The bath can be cooled and temperature stability improved by circulating cold fluid through the coil. For best results, the fluid should be at least 5°C below the temperature setpoint. The required fluid flow rate depends on the type of fluid, the setpoint, and the desired stability.

The plumbing connections for the cooling coil are $^{3}/_{8}$ inch OD stainless steel tubes located on the rear of the unit. These connections will accept $^{3}/_{8}$ inch or $^{5}/_{16}$ inch ID tubing. Tubing is available from Thermo NESLAB.

Connect the COOLING COIL IN tube to the cold fluid source. Connect the COOLING COIL OUT tube to the cold fluid return (or drain if tap water is being used).

Flow Control Valve (Optional)

An optional flow control valve is available to control external circulation. The valve assembly consists of the nine pieces shown below. Once assembled and installed on the unit, clamp a hose to the end of the assembly. Turn the unit on and check for leaks with the valve opened as well as closed.

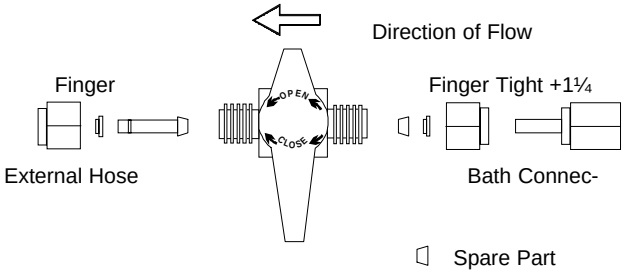

Autorefill (Optional)

The autorefill device is designed to maintain the correct level of fluid in the reservoir. The device consists of a float switch and a solenoid valve. If the fluid level falls, the float switch opens the solenoid valve allowing makeup fluid to fill the reservoir. Once the fluid reaches the proper level, the float switch rises and the solenoid valve closes.

The plumbing connection for the autorefill device, labeled WATER INLET, is located on the rear of the autorefill assembly. The connection is $^{3}/_{8}$" OD stainless steel. To prevent damage to your hosing and to prevent the hose from slipping of the connection, install the supplied hose barb into your tubing. Tubing is also available from Thermo NESLAB. Contact our Sales Department.

Remove the nut on the WATER INLET connection and install the tubing from your makeup fluid source. Reinstall the nut and tubing on the connection.

Install the device on the unit. To secure the device to the unit, tighten the screw located between the float switch and the makeup fluid outlet line. If desired, place the supplied cover on the unit.

The autorefill device requires its own source of electrical power. A connector for the supplied line cord is also located on the rear of the autorefill device. The connector is labelled POWER.

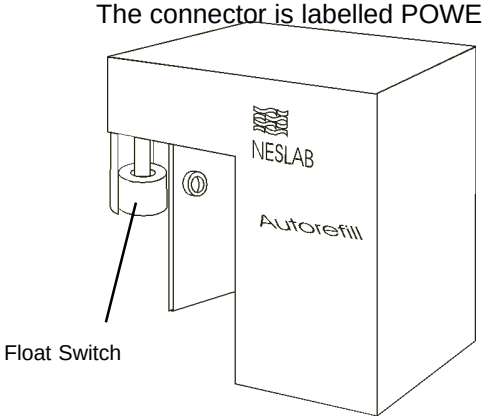

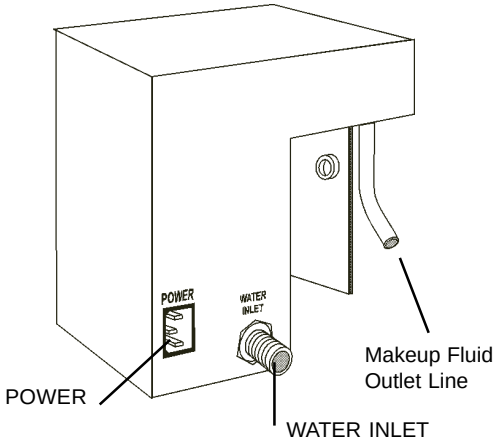

Sealable Bath Lid (Optional)

Depending on your application requirements and/or working environment, a bath lid is available to make EX-111 reservoirs sealable (not pressurized).

The top of the pump grate in the unit's reservoir has four holes cut into the sheet metal. Align the protrusions on the lid with these holes as shown. A locking adjustable grip latch tightens the lid to the tank top allowing an EDPM gasket to create a seal.

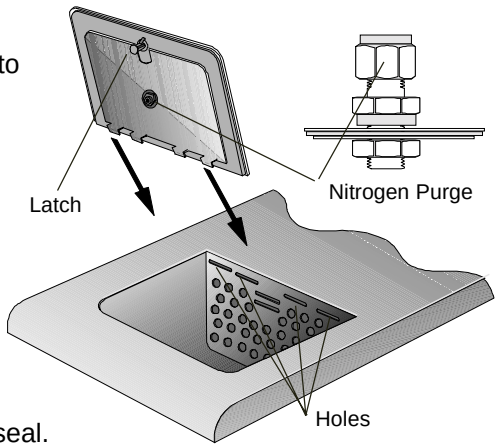

The lid also has a nitrogen purge port. The purge port is a ¼" male Swageloc connector with an o-ring seal.

High Temperature/ Low Liquid Level Safety

To protect your application, the adjustable High Temperature/Low Liquid Level Safety (HIGH TEMP/LOW LEVEL) ensures the heater will not exceed temperatures that can cause serious damage to your unit. A single temperature sensor, located on the heater coils in the bath, monitors both conditions. A High Temperature/Low Liquid Level fault occurs when the temperature of the sensor exceeds the set temperature limit. The safety switch has a temperature range of 7°C to 180°C.

In the event of a fault, the red LED near the adjustment dial will light, the display will go blank, and the unit will shut down. The cause of the fault must be identified and corrected before the unit can be restarted.

The safety is not preset and must be adjusted during initial installation.

To set the safety, locate the HIGH TEMP/LOW LEVEL SAFETY adjustment dial on the right side of the pump box. Turn the dial fully clockwise and turn the I/O switch off then back on.

Start the unit. Adjust the setpoint for a few degrees higher than the highest desired fluid temperature and allow the bath to stabilize at the temperature setpoint. Turn the HIGH TEMP/LOW LEVEL SAFETY dial counterclockwise until you hear a click and the unit shuts down. The red LED near the adjustment dial will light to indicate a fault has occurred.

Cool the bath and then, without moving the adjustment dial, turn the I/O switch off then back on.

NOTE: Thermo NESLAB recommends rechecking operation if the unit is moved.

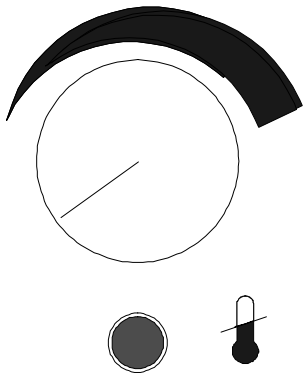

High Temperature/Low Liquid Level Safety

9-Pin Accessory Connector

The unit is equipped with two 9-pin D-connectors located on the rear of the control box. The female COMM is used for RS232 communication (see the Appendix); the male is used with an optional external sensor.



COMM Pin Connections

Pin #	Function
1	No connection.
2	TX = Transmitted data from controller
3	RX = Received data to controller
4	No connection
5	GND = Signal ground
6	No connection.
7	No connection
8	No connection
9	No connection

Hardware	Internal Connector	Mating Connector
	AMP Part# 745491-2	AMP Part# 745492-2

External Sensor Connections

Pin #	Function
1	3-wire RTD connection A
2	No connection
3	No connection
4	3-wire RTD connection A
5	No connection
6	No connection.
7	3-wire RTD connection B
8	No connection
9	No connection

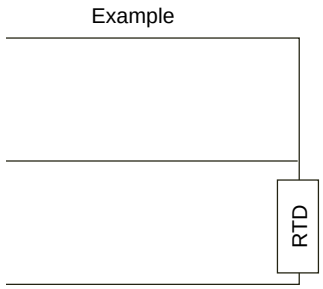

Hardware	Internal Connector	Mating Connector
	AMP Part# 745492-2	AMP Part# 745491-2

Analog Interface (Optional)

An optional 15-pin D subminiature female receptacle for analog interface is located on the rear of the control/pump box.

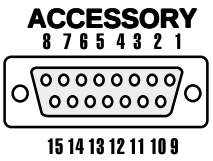

Pin #	Function
1	Chassis ground.
2	No connection.
3 - 5	No connection.
6	Analog Ground. The analog ground is physically separated from the power ground throughout the unit. To prevent offsets that result from ground currents, the analog and power grounds are only connected at the unit's power supply. Analog ground should only be used as a reference pin.
7	Temperature Out. The fluid temperature, as measured by the sensor slected in theSetup Loop (see page 14) , can be read at this pin. The temperature scale is 10mV/°C, referenced to analog ground, pin 6 (example: +150mV = +15.0°C).
8	No connection.
9	Power Ground (5V RTN).
10 - 13	No connection.
14	+5V. Power supply of +5VDC (15mA maximum).
15	Setpoint In. The temperature setpoint can be controlled by applying a known voltage to this pin. The temperature scale is 10mV/°C, referenced to analog ground, pin 6 (example: +230mV = +23.0°C). **Note**: The setpoint is updated only when the voltage represents a temperature within the setpoint limits.

The analog setpoint signal (Setpoint In) is enabled using the unit's software. Using the Setup Loop discussed on page 14, keep depressing the NEXT ENTER key until SP is displayed. Use the YES or NO key to display the desired mode, AnA for analog or LoC for local, then press NEXT ENTER to continue with the loop. **NOTE:** The last value entered is maintained when SP is changed from AnA to LOC or LOC to AnA until a valid voltage is applied.

Store the change.

NOTE: Selecting Analog Input (AnA) as the mode of temperature control overrides both manual input from the keypad, and any serial communication input.

The Analog In and Analog Out discussed in the Calibration Loop on pages 23 and 24 is applicable to this unit. Analog In calibration is done by applying a 2Vdc signal for AiH, and a 0Vdc signal for AiL. Reference the appropriate pins on the ACCESSORY connector.

Analog Out calibration is done by measuring the appropriate pins on the ACCESSORY connector. Adjust the AoH to 1.000Vdc using the YES and NO keys then press ENTER twice. Adjust the AoL to 0.000Vdc using the YES and NO keys then press ENTER twice.

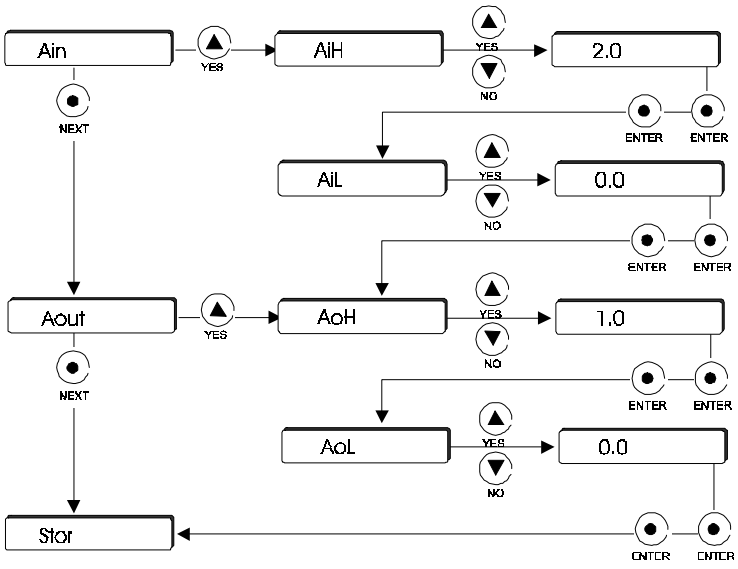

Section V Maintenance



To avoid electrical shock, disconnect the mains cord prior to removing any access panels or covers.

Service Contracts

Thermo NESLAB offers on-site Service Contracts that are designed to provide extended life and minimal down-time for your unit. For more information, contact our Service Department (see Preface, After-sale Support).

Reservoir Cleaning

Routine cleaning can be achieved by simply sponging down the seamless stainless steel tank with tap water. (Dish washing detergent may be used but the tank must be thoroughly rinsed.)

To gain access to the entire reservoir the pump box and reservoir cover should be removed.

Remove the line cord from the rear of the unit.

Remove the four screws securing the reservoir's cover.

Carefully raise the controller and cover assembly to remove it from unit.

Place the cover on its side.

Algae

To restrict the growth of algae in the bath, we recommend the bath cover be kept in place and that all circulation lines be opaque. This will eliminate the entrance of light required for the growth of most common algae.

Thermo NESLAB recommends the use of Chloramine-T, 1 gram per 3.5 liters.

Additional Loops

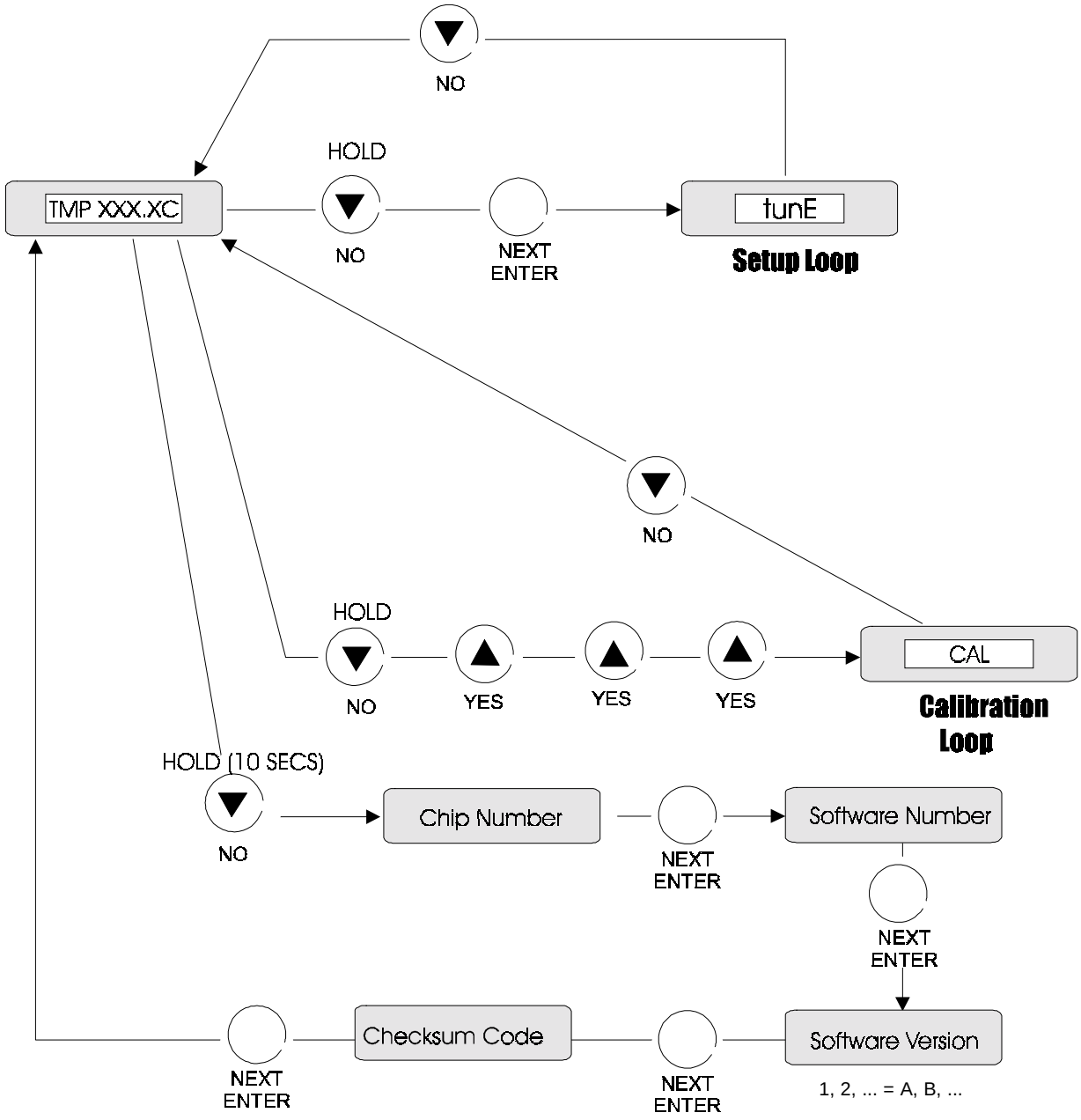

Figure 3 Additional Loops

Calibration Loop

The Calibration Loop is used to calibrate the RTD high and low temperature. The controller's internal temperature sensor is factory calibrated. We recommend calibrating any external sensor.

Enter the Calibration Loop from the Operator's Loop by pressing and holding the NO key while pressing the YES key three times.

Calibration Procedure

Install a calibrated reference thermometer in the bath. (For external mode, also install the sensor in the bath.) Place the cover on the unit.

The procedure uses the Operator's, Setup and Calibration Loops. In the Setup Loop place the unit in either the internal or external RTD mode of operation (RTD1 = Internal , RTD2 = External). Return to the Operator's Loop and adjust the setpoint to an appropriate high-end temperature.

NOTE: When calibrating the external sensor ensure the controller's SENSOR indicator is illuminated.

Once the bath reaches the setpoint and stabilizes, go to the Calibration Loop and, as illustrated on the next page, enter the actual reference thermometer reading at either the r1H or r2H prompt.

Store the change and return to the Operator's Loop. Adjust the setpoint to an appropriate low-end temperature. Once the bath reaches the setpoint and stabilizes, return to the Calibration Loop and enter the reference thermometer reading at either the r1L or r2L prompt. Store the change.



Do not pick points that are outside the safe operating limits of the fluid in your application. For example with a water bath, 90°C and 5°C would be typical calibration points.

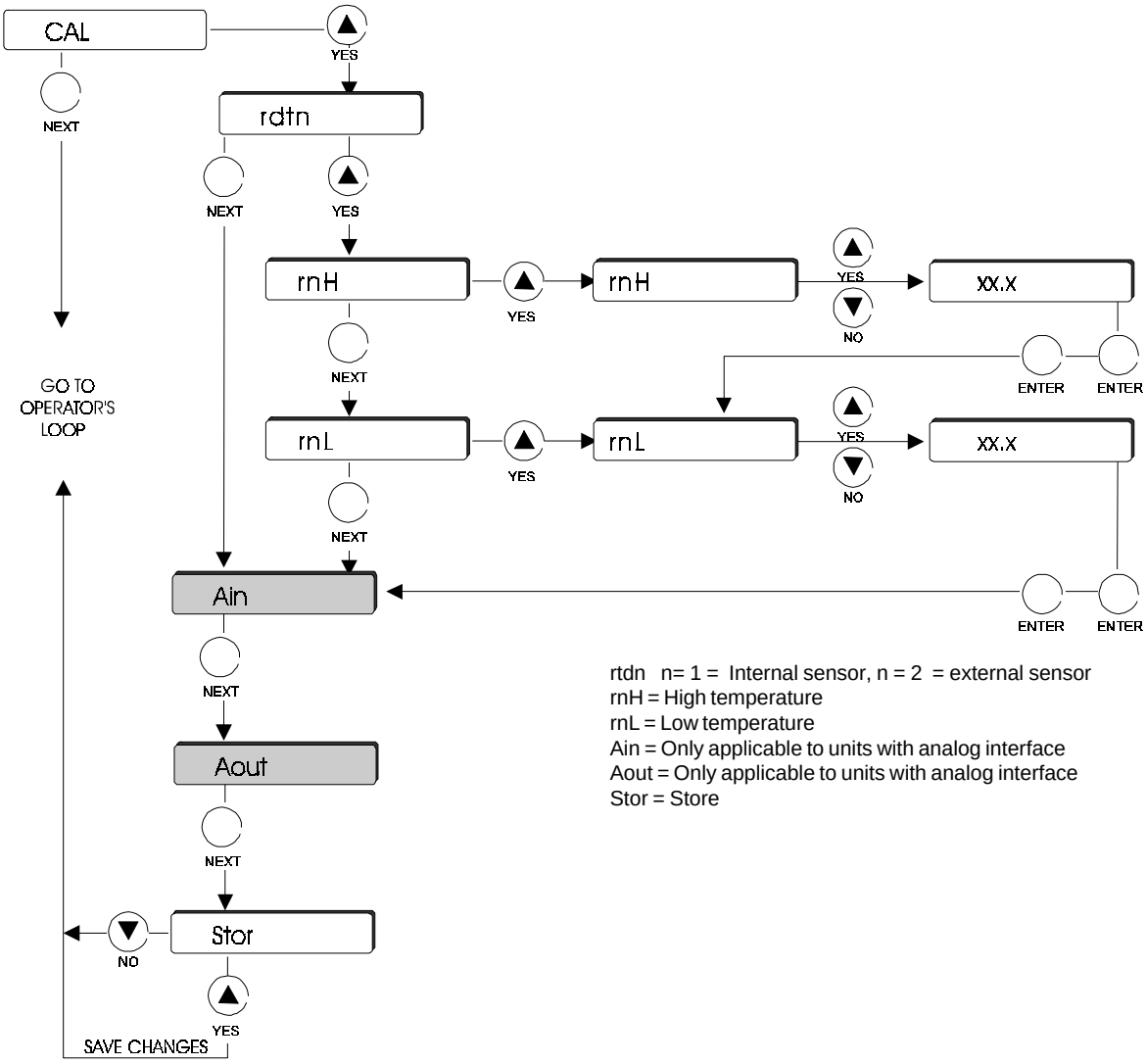

Figure 4 Calibration Loop

NOTE: All changes must be stored, when the display reads **Stor** press **YES**. Should you desire to return to the temperature display and abort *all* changes, when the display reads **Stor** press **NO.**

Section VI Troubleshooting

Checklist

Unit will not start

Make sure the voltage of the power source meets the specified voltage, ±10%. Refer to the serial number label on the rear of the unit to identify the specific electrical requirements of your unit.

Check the High Temperature/Low Liquid Level Safety. If the red LED on the side of the controller is on, make sure the fluid level in the bath is between the marks in the baffle and the HIGH TEMP/LOW LEVEL SAFETY setting is greater than the fluid temperature. Turn the I/O switch off then back on, and attempt to restart.

No external circulation

Make sure the stainless steel plugs on the PUMP INLET and PUMP OUTLET have been removed.

Check for obstructions, kinks, or leaks in the circulation tubing.

Circulation will cease when the pump head has been exceeded.

No/poor temperature control

Check RS232/remote operation on or off.

Selecting the optional Analog Input (AnA) as the mode of temperature control overrides both manual input from the keypad, and any serial communication input.

Check external sensor connection. Perform calibration.

Service Assistance and Technical Support

If, after following these troubleshooting steps, your unit fails to operate properly, contact our Customer Service Department for assistance (see Preface, After-sale Support). Before calling, please obtain the following information:

Part number
Serial number
Voltage of unit
Voltage of power source
Software Version

Our Service Department can provide you with a wiring diagram and a complete list of spare parts for your unit. Before calling, please obtain the following information:

Part number
Serial number

Blank page.

Appendix Serial Communications Protocol

NOTE: This appendix assumes you have a basic understanding of communications protocols.

All data is sent and received in binary form, do not use ASCII. In the following pages the binary data is represented in hexadecimal (hex) format.

The Neslab Serial Communications Protocol, NC, is based on a master-slave model. The master is a host computer, while the slave is the bath's controller. Only the master can initiate a communications transaction (half-duplex). The slave ends the transaction by responding to the master's query. The protocol uses an RS-232 serial interface with the default parameters: 9600 baud, 1 start bit, 8 data bits, 1 stop bit and no parity.

NOTE: Before the unit will communicate, RS232 must be turned on in the controller's Setup Loop.

The unit can be controlled through your computer's serial port by using the unit's standard 9-pin RS-232 connection. Data read of the serial port connects to the data transmit (pin 2) of the bath. Data transmit of the serial port connects to data read (pin 3) of the bath.

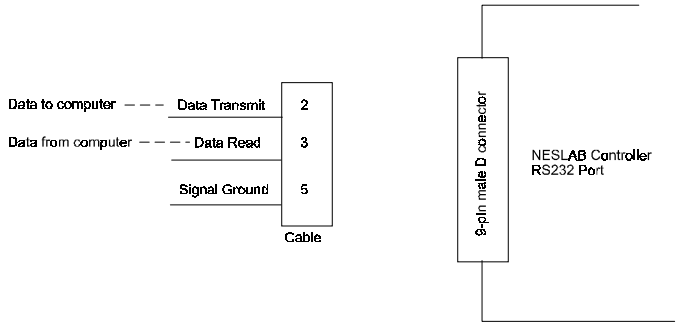

Communication cables are available from Thermo NESLAB. Contact our sales department for additional information.

All commands must be entered in the exact format shown in the tables on the following pages. The tables on on the last page of this Appendix show all commands available, their format and responses. Controller responses are either the requested data or an error message. The controller response *must* be received before the host sends the next command.

The host sends a command embedded in a single communications packet, then waits for the controller's response. If the command is not understood or the checksums do not agree, the controller responds with an error command. Otherwise, the controller responds with the requested data. If the controller fails to respond within 1 second, the host should resend the command.

NC Serial Communications Protocol

NOTE: All byte values are shown in hex, hex represents the binary values that must be sent to the bath. **Do not use ASCII.**

The framing of the communications packet in both directions is:

	Checksum region						
Lead char CA	Addr-MSB 00	Addr-LSB 01	Command	n d-bytes	d-byte 1 ...	d-byte n	Checksum

Lead char	CA (hex).
	Device address is 1
Addr-msb	Most significant byte of device address is 00 hex.
Addr-lsb	Least significant byte of device address is 01 hex.
Command	Command byte (see Table 1).
n d-bytes	Number of data bytes to follow (00 to 03 hex).
d-byte 1	1st data byte (the qualifier byte is considered a data byte).
...	...
d-byte n	nth data byte.
Checksum	Bitwise inversion of the 1 byte sum of bytes beginning with the most significant address byte and ending with the byte preceding the checksum. (To perform a bitwise inversion, "exclusive OR" the one byte sum with FF hex.)

The master requests information by sending one of the Read Functions as shown in Table 1 on page 30. Since no data is sent to the bath during a read request, the master uses 00 for the number of data bytes following the command byte.

The bath will respond to a Read Function by echoing the lead character, address, and command byte, followed by the requested data and checksum. When the bath sends data, a qualifier byte is sent first, followed by a two byte signed integer (16 bit, MSB sent first). The qualifier byte indicates the precision and units of measure for the requested data as detailed in Table 2, see page 30.

As an example, the master requests to read internal temperature by sending:



If the temperature is 62.5°C, the slave would reply:

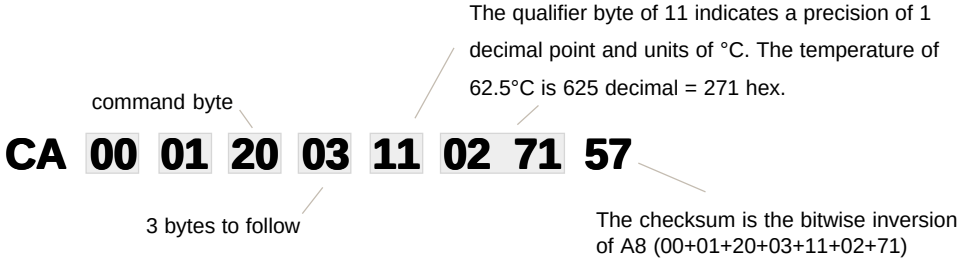

The master sets parameters in the bath by sending one of the Set Functions as shown in Table 1. The master does not send a qualifier byte in the data field. The master should be preprogrammed to send the correct precision and units (it could also read the parameter of interest first to decode the correct precision and units needed).

For example, if the master wants to set the setpoint to 30°C, it would send :

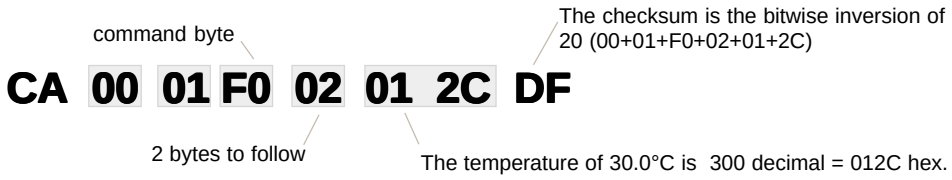

The slave responds:

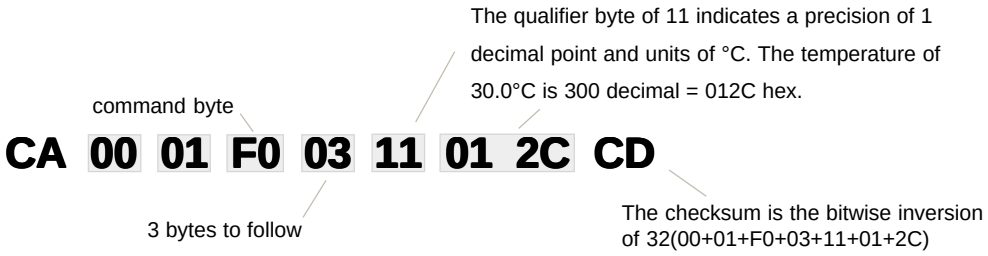

Table 1 (All bytes are in hex)

FUNCTION	MASTER SENDS	BATH RESPONDS
READ		
Read Internal Temperature	CA 00 01 **20** 00 DE	CA 00 01 **20** 03 qb d1 d2 cs
Read External Sensor	CA 00 01 **21** 00 DD	CA 00 01 **21** 03 qb d1 d2 cs
Read Setpoint (control point)	CA 00 01 **70** 00 8E	CA 00 01 **70** 03 qb d1 d2 cs
Read Low Temperature Limit	CA 00 01 **40** 00 BE	CA 00 01 **40** 03 qb d1 d2 cs
Read High Temperature Limit	CA 00 01 **60** 00 9E	CA 00 01 **60** 03 qb d1 d2 cs
Read Proportional Band (P)	CA 00 01 **71** 00 8D	CA 00 01 **71** 03 qb d1 d2 cs
Read Integral (I)	CA 00 01 **72** 00 8C	CA 00 01 **72** 03 qb d1 d2 cs
Read Derivative (D)	CA 00 01 **73** 00 8B	CA 00 01 **73** 03 qb d1 d2 cs
SET		
Set Setpoint (control point)*	CA 00 01 **F0** 02 d1 d2 cs	CA 00 01 **F0** 03 qb d1 d2 cs
Set Low Temperature Limit*	CA 00 01 **C0** 02 d1 d2 cs	CA 00 01 **C0** 03 qb d1 d2 cs
Set High Temperature Limit*	CA 00 01 **E0** 02 d1 d2 cs	CA 00 01 **E0** 03 qb d1 d2 cs
Set Proportional Band (P=1-99.9)	CA 00 01 **F1** 02 d1 d2 cs	CA 00 01 **F1** 03 qb d1 d2 cs
Set Integral (I = 0-9.99)	CA 00 01 **F2** 02 d1 d2 cs	CA 00 01 **F2** 03 qb d1 d2 cs
Set Derivative (D= 0-5.0)	CA 00 01 **F3** 02 d1 d2 cs	CA 00 01 **F3** 03 qb d1 d2 cs
BATH ERROR RESPONSES		
Bad Command	N/A	CA 00 01 **0F** 02 01 ed cs
Bad Checksum	N/A	CA 00 01 **0F** 02 03 ed cs
MISCELLANEOUS		
Request Acknowledge	CA 00 01 **00** 00 FE	CA 00 01 **00** 02 v1 v2 cs

command bytes shown in **bold**
qb = qualifier byte
d1,d2 = 16 bit signed integer of the value being sent or received
cs = the checksum of the string (see text)
ed = echo back of the command byte as received
v1,v2 = protocol version
* = limited to the range of the bath

Table 2

QUALIFIER BYTE

10 hex	0.1 precision, no units of measure
20 hex	0.01 precision, no units of measure
11 hex	0.1 precision, °C units

Example: The temperature of 45.6 °C would be represented by the qualifier 11 hex, followed by the 2 bytes 01 C8 hex (456 decimal).

Appendix B Programming Software

NEScom Software/ RS232 Communication

The Thermo NESLAB Communications Software is a user-friendly software that allows you to automate your temperature control process. The software includes a 3½" disk, comprehensive operator's manual and a toll-free number to a trained technical staff.

NEScom Software allows you to write custom temperature programs for our Digital or Microprocessor based temperature control apparatus. Choose upper or lower temperature limits and monitor system status with an alarm. NEScom can also record your results on a user selectable graph. NesCom must be used with an IBM or 100% compatible computer.

Select from easy to use product icons.

Create graphs and charts.

Easily configure ramping functions that set the setpoint over time.

View pop-up alarm windows that display if an alarm condition occurred.

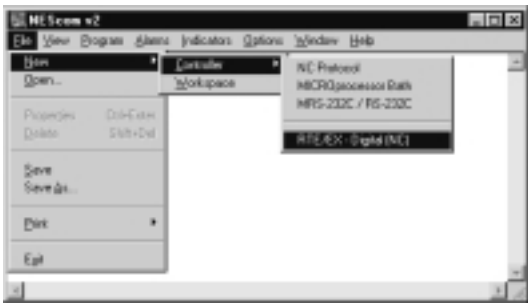

Select software functions from the easy to use pulldown menus.

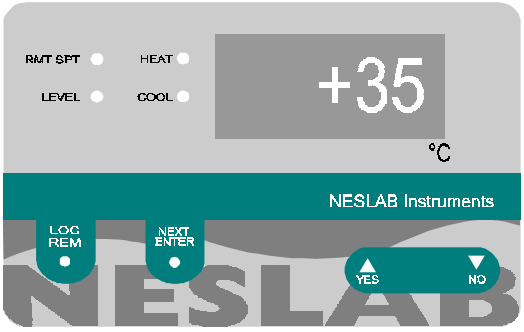

View a virtual controller screen which allows remote monitoring and operation of product control panel.

WARRANTY

Thermo NESLAB Instruments, Inc. warrants for 12 months from date of shipment any Thermo NESLAB unit according to the following terms.

Any part of the unit manufactured or supplied by Thermo NESLAB and found in the reasonable judgment of Thermo NESLAB to be defective in material or workmanship will be repaired at an authorized Thermo NESLAB Repair Depot without charge for parts or labor. The unit, including any defective part must be returned to an authorized Thermo NESLAB Repair Depot within the warranty period. The expense of returning the unit to the authorized Thermo NESLAB Repair Depot for warranty service will be paid for by the buyer. NESLAB's responsibility in respect to warranty claims is limited to performing the required repairs or replacements, and no claim of breach of warranty shall be cause for cancellation or recision of the contract of sales of any unit.With respect to units that qualify for field service repairs, Thermo NESLAB's responsibility is limited to the component parts necessary for the repair and the labor that is required on site to perform the repair. Any travel labor or mileage charges are the financial responsibility of the buyer.

The buyer shall be responsible for any evaluation or warranty service call (including labor charges) if no defects are found with the Thermo NESLAB product.

This warranty does not cover any unit that has been subject to misuse, neglect, or accident. This warranty does not apply to any damage to the unit that is the result of improper installation or maintenance, or to any unit that has been operated or maintained in any way contrary to the operating or maintenance instructions specified in Thermo NESLAB's Instruction and Operation Manual. This warranty does not cover any unit that has been altered or modified so as to change its intended use.

In addition, this warranty does not extend to repairs made by the use of parts, accessories, or fluids which are either incompatible with the unit or adversely affect its operation, performance, or durability.

Thermo NESLAB reserves the right to change or improve the design of any unit without assuming any obligation to modify any unit previously manufactured.

THE FOREGOING EXPRESS WARRANTY IS IN LIEU OF ALL OTHER WARRANTIES, EXPRESSED OR IMPLIED, INCLUDING BUT NOT LIMITED TO WARRANTIES OR MERCHANTABILITY AND FITNESS FOR A PARTICULAR PURPOSE.

NESLAB'S OBLIGATION UNDER THIS WARRANTY IS STRICTLY AND EXCLUSIVELY LIMITED TO THE REPAIR OR REPLACEMENT OF DEFECTIVE COMPONENT PARTS AND Thermo NESLAB DOES NOT ASSUME OR AUTHORIZE ANYONE TO ASSUME FOR IT ANY OTHER OBLIGATION.

Thermo NESLAB ASSUMES NO RESPONSIBILITY FOR INCIDENTAL, CONSEQUENTIAL, OR OTHER DAMAGES INCLUDING, BUT NOT LIMITED TO LOSS OR DAMAGE TO PROPERTY, LOSS OF PROFITS OR REVENUE, LOSS OF THE UNIT, LOSS OF TIME, OR INCONVENIENCE.

This warranty applies to units sold in the United States. Any units sold elsewhere are warranted by the affiliated marketing company of Thermo NESLAB Instruments, Inc. This warranty and all matters arising pursuant to it shall be governed by the law of the State of New Hampshire, United States. All legal actions brought in relation hereto shall be filed in the appropriate state or federal courts in New Hampshire, unless waived by Thermo NESLAB.

EX Series Bath Circulator
with
Microprocessor Controller

Thermo NESLAB P/N 000261
Rev. 10/26/00

Instruction and Operation Manual

EX-Series Refrigerated Bath Circulator
Table of Contents

PREFACE

Compliance 2
Unpacking 2
Warranty 2
NES-care Extended Warranty 2
After-sale Support 2

SECTION I
Safety

Warnings 3

SECTION II
General Information

Description 4
Specifications 4

SECTION III
Installation

Site 6
Electrical Requirements 6
Plumbing Requirements 7
Tap Water Cooling Coil 9
Drain 9
Fluids 9
Filling Requirements 9

SECTION IV
Controllers

Microprocessor Controller 10
Start Up 12
Temperature Adjustment 12
Alarm/External Functions 13
Program Functions 14
Program Control 16
Error Messages 19
Miscellaneous 19
PID Control 20
Restoring Factory PID Values 20
Calibration 21
High Temperature/Low Liquid Level Safety 23

SECTION V
Maintenance

Service Contracts 24
Reservoir Cleaning 24
Algae 24

SECTION VI
Troubleshooting

Checklist 25
Service Assistance and Technical Support 26

APPENDIX A

RS-232

APPENDIX B

Programming Software

WARRANTY

Preface

Compliance

Products tested and found to be in compliance with the requirements defined in the EMC standards defined by 89/336/EEC as well as Low Voltage Directive (LVD) 73/23/EEC can be identified by the CE label on the rear of the unit. The testing has demonstrated compliance with the following directives:

LVD, 73/23/EEC	Complies with UL 3101-1:93
EMC, 89/336/EEC	EN 55011, Class A Verification EN 50082-1:1992 IEC 1000-4-2:1995 IEC 1000-4-3:1994 IEC 1000-4-4:1995

For any additional information refer to the Letter of Compliance that shipped with the unit (Declaration of Conformity).

Unpacking

Retain all cartons and packing material until the unit is operated and found to be in good condition. The unit control box for microprocessor units is packed in a separate carton. Be sure to locate this separate carton; do not dispose of it by mistake.

If the unit shows external or internal damage, or does not operate properly, contact the transportation company and file a damage claim. Under ICC regulations, this is your responsibility.

Warranty

Units have a warranty against defective parts and workmanship for one full year from date of shipment. See back page for more details.

NES-care Extended Warranty Contract

- Extend parts and labor coverage for an additional year.
- Worry-free operation.
- Control service costs.
- Eliminate the need to generate repair orders.
- No unexpected repair costs.

Other contract options are available. Please contact Thermo NESLAB for more information.

After-sale Support

Thermo NESLAB is committed to customer service both during and after the sale. If you have questions concerning the operation of your unit or the information in this manual, contact our Sales Department. If your unit fails to operate properly or if you have questions concerning spare parts or Service Contracts, contact our Service Department.

Before calling, please refer to the serial number label on the rear of the case top to obtain the following information (see Section II, Description for the serial number label location):

- BOM number _____

- Serial number _____

Section I Safety

Warnings

Make sure you read and understand all instructions and safety precautions listed in this manual before installing or operating your unit. If you have any questions concerning the operation of your unit or the information in this manual, contact our Sales Department.

Performance of installation, operation, or maintenance procedures other than those described in this manual may result in a hazardous situation and may void the manufacturer's warranty.

Transport the unit with care. Sudden jolts or drops can damage the refrigeration lines.

Observe all warning labels.

Never remove warning labels.

Never operate damaged or leaking equipment.

Never operate the unit without bath fluid in the bath.

Never use pure ethylene glycol as a bath fluid. A minimum 80/20 mixture of Ethylene Glycol and tap water is allowed.

For 220 - 240 volt units supplied without a line cord, use a harmonized (HAR) grounded 3-conductor cord, type H 0 5 V V - F , with conductors listed below. A suitable cord end is required for connecting to the equipment (see unit socket) and must terminate with an IEC approved plug for proper connection to power supply.

NON-BOOST HEATER UNITS	**Nominal 1.0 mm² cross section rated 10 Amps** **Unit Socket: IEC - 320 C13**
BOOST HEATER UNITS	**Nominal 1.5 mm² cross section rated 16 Amps** **Unit Socket: IEC - 320 C19**

Always turn off the unit and disconnect the line cord from the power source before performing any service or maintenance procedures, or before moving the unit.

Always empty the bath before moving the unit.

Never operate equipment with damaged line cords.

Refer service and repairs to a qualified technician.

In addition to the safety warnings listed above, warnings are posted throughout the manual. These warnings are designated by an exclamation mark inside an equilateral triangle with text highlighted in bold print. Read and follow these important instructions. Failure to observe these instructions can result in permanent damage to the unit, significant property damage, personal injury or death.

Section II General Information

Description

The EX Series Bath Circulators are designed to provide temperature control for applications requiring a fluid work area or pumping to an external system.

The units consist of a circulation pump, stainless steel bath, a work area cover, and a microprocessor temperature controller.

Specifications

	EX-111	EX-211
Temperature Range[1]	Ambient to +150°C	
Temperature Stability[2]	±0.01°C	
Pumping Capacity	15 lpm at 0' (0 M) 0 lpm at 16' (4.9 M)	
Heater *Watts* *50 Hz Models*	800 1000	
Bath Work Area (H x W x D) *Inches* *Centimeters*	4 3/4 x 8 x 6 12.1 x 20.3 x 15.2	9 1/4 x 10 x 6 23.5 x 25.4 x 15.2
Bath Volume *Gallons* *Liters*	1.9 7.0	3.2 12.3
Case Dimensions *(L x W x D)* *Inches* *Centimeters*	17 x 10 5/16 x 15 7/8 43.2 x 26.2 x 40.3	17 x 12 3/8 x 18 3/8 43.2 x 31.4 x 46.7
Power Requirements[3]	115 V, 60 Hz, 9 Amps 220/240 V, 50 Hz, 5.5 Amps	

1. Low-end temperature with tap water cooling. The controller may be set to -30°C, however to achieve temperatures below the specified range requires accessory cooling. Contact Thermo Neslab for more details.
2. Stability is a function of the bath fluid temperature. The use of a work area cover and tap water cooling may optimize bath stability for your work.
3. Power Board Transformer Fuse– T 2.0A 250V (Qty 1) [T=Time Delay].

Specifications

	EX-221	EX-411	EX-511
Temperature Range[1]	Ambient to +150°C		
Temperature Stability[2]	±0.01°C		
Pumping Capacity	15 lpm at 0' (0 M) 0 lpm at 16' (4.9 M)		
Heater *Watts* *50 Hz Models*	800/800 boost 1000/800 boost	800 1000	800/800 boost 1000/800 boost
Bath Work Area *(H x W x D)* *Inches* *Centimeters*	9 1/4 x 10 x 9 23.5 x 25.4 x 22.9	19 1/4 x 10 x 6 48.9 x 25.4 x 15.2	16 1/4 x 10 x 12 41.3 x 25.4 x 30.5
Bath Volume *Gallons* *Liters*	5.4 20.5	5.8 22.0	11.0 41.5
Case Dimensions *(L x W x D)* *Inches* *Centimeters*	20 x 12 3/8 x 18 3/8 50.8 x 31.4 x 46.7	17 x 12 3/8 x 28 3/8 43.2 x 31.4 x 72.1	23 x 12 3/8 x 25 3/8 58.4 x 31.4 x 64.5
Power Requirements	115 V, 60 Hz, 16 Amps 220/240 V, 50 Hz, 10 Amps	115 V, 60 Hz, 9 Amps 220/240 V, 50 Hz, 5.5 Amps	115 V, 60 Hz, 16 Amps 220/240 V, 50 Hz, 10 Amps

1. Low-end temperature with tap water cooling. The controller may be set to -30°C, however to achieve temperatures below the specified range requires accessory cooling. Contact Thermo Neslab for more details.
2. Stability is a function of the bath fluid temperature. The use of a work area cover and tap water cooling may optimize bath stability for your work.
3. Power Board Transformer Fuse- T 2.0A 250V (Qty 1) [T=Time Delay].

Section III Installation

Site



Never place the unit in a location where excessive heat, moisture, or corrosive materials are present.

Lift the unit by grasping under the case near the rubber feet. Locate the unit on a sturdy table or bench top. Ambient temperatures should be inside the range of +50°F to +80°F (+10°C to +27°C).

Electrical Requirements



Line voltage may be easily accessible inside the pump/control box. Always unplug the unit prior to removing pump/control box cover.

Refer to the serial number label on the rear of the unit to identify the specific electrical requirements of your unit.

Ensure the voltage of the power source meets the specified voltage, ±10%.

The unit construction provides extra protection against the risk of electric shock by grounding appropriate metal parts. The extra protection may not function unless the power cord is connected to a properly grounded outlet. It is the user's responsibility to assure a proper ground connection is provided.



For 220 - 240 volt units supplied without a line cord, use a harmonized (HAR) grounded 3-conductor cord, type H 0 5 V V - F , with conductors listed below. A suitable cord end is required for connecting to the equipment (see unit socket) and must terminate with an IEC approved plug for proper connection to power supply.

BOOST HEATER UNITS	**Nominal 1.5 mm² cross section rated 16 Amps**
	Unit Socket: IEC - 320 C19
NON-BOOST HEATER UNITS	**Nominal 1.0 mm² cross section rated 10 Amps**
	Unit Socket: IEC - 320 C13

Plumbing Requirements



Ensure the unit is off before connecting tubing to the unit.

To prevent damage to the plumbing lines, always support the ¾" fittings while installing/removing the pumping caps and lines.

Hose Connections

The pump connections are located at the rear of the pump box and are labelled PUMP INLET and PUMP OUTLET. These connections are bent upward so the recirculating fluid will drain back into the reservoir when the hoses are disconnected. Both connections are capped with stainless steel serrated plugs.

The pump lines have ¼ inch male pipe threads for mating with standard plumbing fittings. For your convenience stainless steel adapters, ¼ inch female pipe thread to ⅜ inch O.D. serrated fitting, are provided. (To assure proper fit, they should be installed using Teflon® tape around the threads.)

Flexible tubing, if used, should be of heavy wall or reinforced construction. Make sure all tubing connections are securely clamped. Avoid running tubing near radiators, hot water pipes, etc. If substantial lengths of tubing are necessary, insulation may be required to prevent loss of cooling capacity.

Tubing and insulation are available from Thermo NESLAB. Contact our Sales Department for more information (see Preface, After-sale Support).

It is important to keep the distance between the unit and the external system as short as possible, and to use the largest diameter tubing practical. Tubing should be straight and without bends. If diameter reductions must be made, make them at the inlet and outlet of the external system, not at the unit.

If substantial lengths of cooling lines are required, they should be pre-filled with bath fluid before connecting them to the unit. This will ensure that an adequate amount of fluid will be in the bath once it is in operation.

Pumping

The pump is designed to deliver a flow of 15 liters/minute (4 gallons minute) at 0 feet head. To prevent external circulation, the PUMP INLET and PUMP OUTLET lines on the rear of the unit are capped. The caps must be removed when external circulation is required.

To properly secure external hose connections to the unit, wrap Teflon® tape around the pipe line threads before installation. Once the hose connections are made, the hoses must be properly plumbed to an external system. *It is important the bath is not in operation until all plumbing is complete.*

If the bath is not used for external circulation, make sure the stainless steel caps are in place prior to operating the bath.

Circulating to an open container

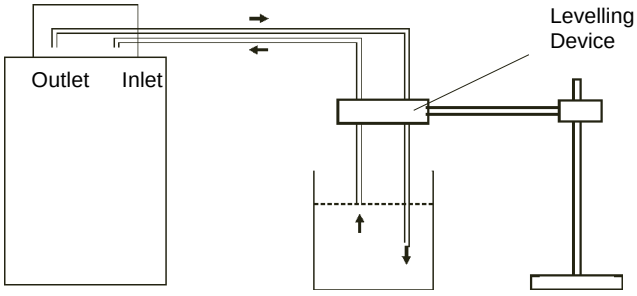

A stainless steel leveling device is available to aid circulation to an open vessel. Contact our Sales Department for more information (see Preface, After-sale Support).

Support the leveling device over the open container with a ringstand. Stagger the tubes in the leveling device so one tube is submerged in the vessel fluid, and the other tube is level with the fluid surface. Connect the deeper tube to the PUMP OUTLET and the shorter tube to the PUMP INLET.

Adjust the flow rate using the accessory flow control valve connected to the PUMP OUTLET, or by partially restricting the outlet tubing. When properly adjusted, the pump inlet will draw an occasional air bubble to prevent over flow, and the pump outlet will force fluid through the submerged tube to prevent aeration of the vessel.

To avoid siphoning the bath work area when the unit is shut off, lift the leveling device out of the vessel and above the level of the unit.

Circulating through two closed loops

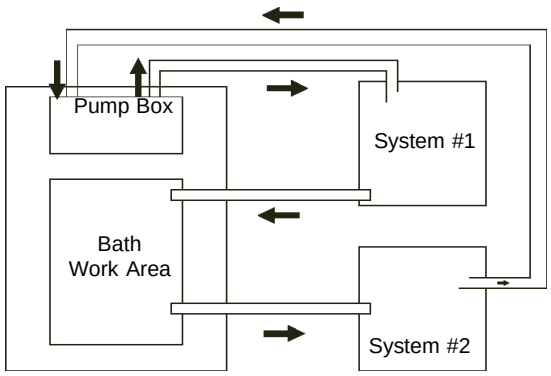

Bath (Top View)

The pump can be used to circulate through two closed loop systems. Connect the shortest practical length of flexible tubing from the PUMP OUTLET to the inlet of external system #1. Connect the outlet of system #1 directly into the bath work area. Connect tubing from the bath work area to the inlet of system #2. Connect the outlet of system #2 to the PUMP INLET.

Tap Water Cooling Coils

The unit is equipped with a cooling coil located behind the stainless steel baffle in the bath. The bath can be cooled and temperature stability improved by circulating cold fluid through the coil. For best results, the fluid should be a least 5°C below the temperature setpoint. The required fluid flow rate depends on the type of fluid, the setpoint, and the desired stability.

The plumbing connections for the cooling coil are $^{3}/_{8}$ inch OD stainless steel tubes located on the rear of the unit. These connections will accept $^{3}/_{8}$ inch or $^{5}/_{16}$ inch ID tubing. Tubing is available from Thermo NESLAB. Connect the COOLING COIL IN tube to the cold fluid source. Connect the COOLING COIL OUT tube to the cold fluid return (or drain if tap water is being used).

Drain



Ensure the temperature of the bath fluid is safe before draining the unit.

The unit is equipped with a drain located at the back of the unit at the base of the bath. The drain has ¼ inch male pipe threads and is capped with a stainless steel plug. To drain the reservoir simply remove the cap.

To assure proper fit when replacing the cap, be sure to line the threads with Teflon® tape.

Fluids



Never use flammable or corrosive fluids with this unit.

Filtered tap water is the recommended fluid for operation from +8°C to +80°C.

Above +80°C, the user is responsible for fluids used.



Never use pure ethylene glycol as a bath fluid. A minimum 80/20 mixture of Ethylene Glycol and tap water is allowed.

Filling Requirements

The bath work area has a high and low level marker to guide filling. The markers are 1 inch horizontal slits located in the center of the stainless steel baffle separating the work area and the pump assembly. The correct fluid level falls between these two markers. The heating coils will be exposed and may become damaged if the correct fluid level is not provided.

When pumping to an external system, keep extra fluid on hand to maintain the proper level in both the circulating lines and the external system.



Never run the unit when the work area is empty. Avoid overfilling. Overfilling the bath may damage the insulation and affects stability.

Section IV Microprocessor Controllers

Microprocessor Controller

Description

The microprocessor controller is designed as a separate component from the unit. The controller can be mounted directly on the pump box, or remotely from the bath. The controller provides proportional with integral and derivative (PID) control.

The controller has two sections. The upper section contains the LED indicators and the Main display which provide feedback to you about the controller and bath. The ten individual LED indicators provide output on selected parameters while the Main display will provide information on various unit conditions.[1] The lower section contains the keypad you use to input data to the controller.

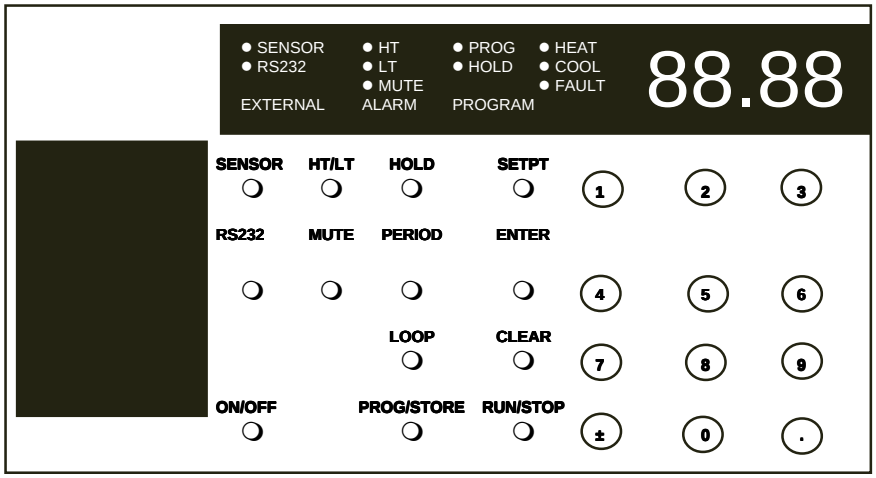

Microprocessor Temperature Controller (Front View)

Controller Mounting

The controller can be removed from the bath and placed in a remote location. Extension cables are available from Thermo NESLAB. Contact our Sales Department for more information.

Controller Connection

Microprocessor controllers are supplied with a cable needed to connect the controller to the pump box. Connect the cable to the 25-pin male connector on the control box and the female connector on the pump box. Once the connection is made, the unit is ready for operation.

NOTE: The MAIN POWER should be OFF before connecting/disconnecting cables from the control box.

1. The COOL LED is applicable only to refrigerated units.

LED Indicators

The following table explains the controller LED indicators. The LEDs can be on, off or flashing.

LED	STATUS	INDICATION
SENSOR	OFF	All controller functions are operating from the unit's internal probe.
	ON	All controller functions are operating from remote sensor input.
	FLASHING	The Main display indicates the remote sensor temperature. The controller, however, still uses the internal probe to control the bath temperature.
RS232	OFF	Communication port disabled.
	ON	Communication port enabled.
	FLASHING	Awaiting next key press
LT	OFF	No alarm.
	ON	Main display indicates low limit setpoint.
	FLASHING	Low limit alarm condition.
HT	OFF	No alarm.
	ON	Main display indicates high limit setpoint.
	FLASHING	High limit alarm condition.
HOLD	OFF	Programming hold feature disabled.
	ON	Programming hold feature enabled.
PROG	OFF	No program running.
	ON	The program is suspended[1].
	FLASHING	The program is running.
COOL[2]	OFF	Refrigeration is off.
	ON	Refrigeration is on.
HEAT	OFF	The heater is off.
	ON	The heater is on.
	FLASHING	The heater duty cycle.
MUTE	OFF	The alarm is enabled.
	ON	The alarm horn is disabled.
	FLASHING	The alarm horn has been disabled for any current condition. The alarm horn will automatically reset when the condition is cleared.
FAULT	OFF	No fault condition.
	ON	The high temperature/low level safety has activated.

1. The bath fluid will maintain he setpoint achieved at the time the program is suspended. No operator inputs are available to the controller while in a suspended condition.
2. The COOL LED is applicable only to refrigerated units.

Start Up

Before starting the unit, check all electrical and plumbing connections and make sure the work area has been properly filled with bath fluid.

NOTE: The fluid level should be between the two lateral slots at the rear of the reservoir.

To power the controller on 115V units, place the MAIN POWER switch on the side of the unit to the ON position. This only supplies power to the controller. *The unit itself is not operating.* The Main display on the controller will display OFF.

220V units have a circuit breaker instead of a switch. The circuit breaker is labeled **I** (power on) and **O** (power off). Ensure the circuit breaker is in the **I** position.

Press the keypad ON/OFF button on the controller. The pump will start and the Main display will indicate the temperature of the fluid in the bath. The controller will respond to the current setpoint.

Pressing the keypad ON/OFF button again will disable control of the bath and shut down the pump. The Main display will indicate OFF. (When the controller is in the RS232 mode of operation, see page 13, the ON/OFF button is deactivated. Control of the bath can only be disabled via an RS232 input.)

Temperature Adjustment

To display the temperature setpoint, press SETPT. The Main display will flash the current setpoint. Press ENTER to return the display to the bath's fluid temperature. To adjust the setpoint press SETPT and then press CLEAR, the display will go blank. Use the keypad to input the desired value. If the value is correct press ENTER. If the value is incorrect press CLEAR, the display will go blank. Use the keypad to correct the value and press ENTER.

Low and High Temperature Limits

To display the temperature limits, press HT/LT. Either the HT or LT LED will illuminate and the Main display will flash the corresponding temperature limit. Press ENTER and then press HT/LT again to observe the other temperature limit. The corresponding LED on the controller will illuminate. Should either limit be exceeded an alarm will sound (if not muted) and the corresponding LED will flash.

To adjust either limit, press HT/LT and then press CLEAR, the display will go blank. Use the keypad to input the desired value. If the value is correct press ENTER. If the value is incorrect press CLEAR, the display will go blank. Use the keypad to correct the value and press ENTER. Use the LT or HT LED indicators to verify which temperature limit you are changing.

Alarm/External Functions

Mute Alarm

The alarm audio may be permanently silenced by pressing MUTE, and then immediately (within one second) pressing HOLD. The MUTE LED will now stay lit. To restore the audio, press MUTE and then immediately (within one second) press CLEAR. The MUTE LED will extinguish.

If desired, you may mute the audible portion of an alarm for an existing condition. Press MUTE on the temperature controller. The MUTE LED flashes to indicate a muted alarm horn. The MUTE button acts as a toggle switch to activate/deactivate the alarm horn. The appropriate HT or LT LED will continue to flash during the alarm condition. If the alarm is muted for an existing condition it will automatically reset once the temperature limit problem is corrected. The alarm will resound if a limit is exceeded another time unless MUTE is pressed again.

Sensor

The controller has the capability to enable and/or monitor a remote bath's temperature sensor. (Remote sensor probes of various sizes are available from Thermo NESLAB. Contact our Sales Department for more information.) Pressing SENSOR, when a remote sensor is properly connected to the controller's
9-pin SENSOR connector, will display the remote sensor's temperature on the Main display. The SENSOR LED will flash. *The controller and alarm, however, will continue to respond to the signals from the unit's internal probe.*

To completely transfer all display, control and alarm functions to the remote sensor, press SENSOR and then press ENTER. The SENSOR LED will stay lit. The controller will not respond to the signal from the unit's internal probe.

To disable the remote sensor press SENSOR and then press CLEAR. The SENSOR LED will extinguish. All display and alarm functions will again respond to the signal from the unit's internal probe.

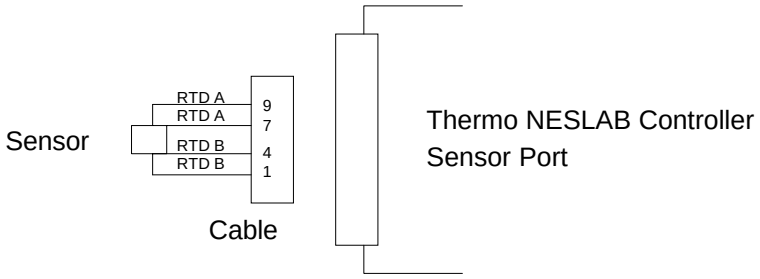

RS232

The unit can be controlled through your computer's serial port by using a standard 9-pin RS232 connection on ther rear of the temperature controller. For complete information see Appendix A.

Program Functions

Programming

The microprocessor controller can store up to 8 temperature programs, each one having up to 15 program steps (16 setpoints). You can select, enter or run one program at a time. The procedure for selecting a program is discusssed in Program Control on page 15. The programs can cover the unit's full temperature operating range in 0.01°C increments. Step times can vary from 0.1 to 6,500 minutes in 0.1 minute increments. Each program can be set up to run as many as 9999 repetitions (LOOPS).

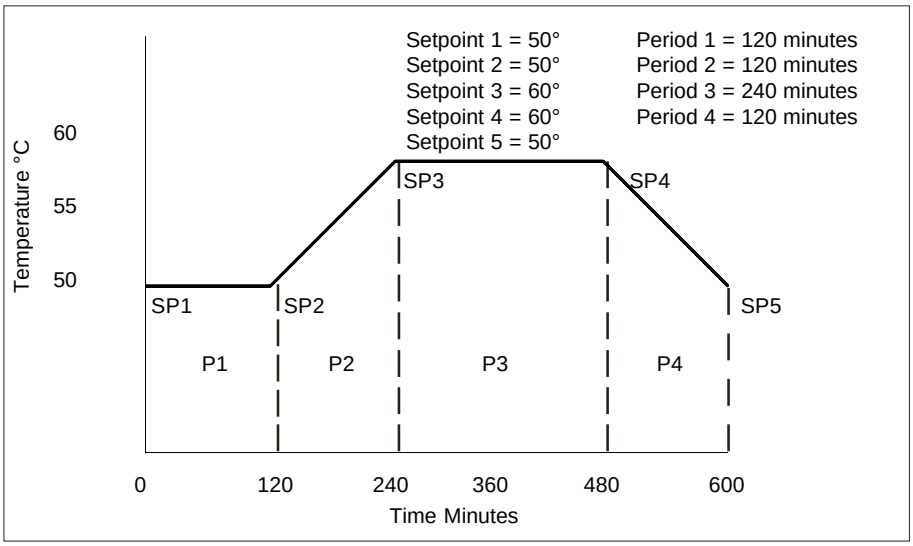

Typical Program

The controller can store all programs in its nonvolatile memory, see Program Control on page 16.

The programming process begins with program definition. Define your program as a series of setpoints with a known period of time interval between each of them. Each interval is one step of the program. Give careful attention to the first part of your program. What conditions must exist at the beginning of your process? For example, you may wish to program an initial period of constant temperature to allow for thermal stabilization.

When a program is started, it begins immediately at the initial program setpoint.

Consider the unit's limitations when designing programs. Temperature or time parameters which exceed the performance capabilities of the bath will result in unsatisfactory operation. It is possible to create a program calling for very rapid changes in temperature. Although the equipment may not be capable of producing such changes, it may be practical to program such steps as a way to cause the fastest *possible* temperature change.

Loops

This option allows for automatic repetition(s) of a program. For example, set the number of loops to three. Once the program reaches the last setpoint, it will loop back to the first setpoint and run the program again. In this instance the program will loop back three times. The entire program will run a total of four times. The maximum number of loops is 9999.

Hold

This option determines what will happen at the end of a program. In the hold mode of operation the setpoint will remain at the final temperature when the program is completed. Without hold the setpoint will return to the starting setpoint when the program is completed. The setpoint may change abruptly, but the fluid temperature will respond as quickly as the system's heating and cooling capacity allows.

The procedures for placing the controller in the hold mode is discussed in Program Control on page 16.

Current Values

While a program is running, the program selected, current period, current setpoint, time remaining for the current step, or the current loop, may be viewed on the Main display. Momentarily depress the appropriate key listed below to view the desired parameter. After several seconds, the Main display will again indicate the temperature of the bath fluid.

SETPT	View Current Setpoint
LOOP	View Current Loop
PERIOD	Time Remaining in Current Period
PERIOD PERIOD	Current Period Number
+/- followed immediately by **PROG/STORE**	Selected Program Number

Assured Soak

This option is used when you need to ensure the bath temperature will reach the next setpoint (regardless of time) before moving onto the next period.

This option is controlled by a DIP switch on the rear of the controller. Turn DIP switch number seven (7) to the ON position to enable this feature.

Period Adjust

This option is used to skip the current period of a running program. See Table 13 on page 18 for the appropriate procedure. **NOTE:** If Assured Soak is activated, the bath *must* reach that setpoint before the program will continue.

Program Control

The following tables show how to use the keypad and Main display to program the controller.

Use Table 1 to select one of the eight programs to be the current program for either entering or running.

TABLE 1

Keypad input	Main Display	Comments
+/-	Current bath temperature	
-PROG/STORE[1]	**Pro** followed by the program number	Enter desired program number.
-ENTER	Current bath temperature	

1. PROG/STORE must be depressed immediately (within one second) after +/-.

Once Table 1 is complete, use Table 2 for entering and storing a two-setpoint program. You would follow this procedure for programming any number of setpoints (up to the 16 setpoint maximum).

TABLE 2

Keypad input	Main Display	Comments
-PROG/STORE	**- - - - - -**	If YES appears you should clear the current program (see Table 10).
-SETPT	**SP-1**	Input setpoint.
-ENTER	Desired setpoint	
-PERIOD	**P-1**	Input time in minutes.
-ENTER	Desired time	
-SETPT	**SP-2**	Input setpoint.
-ENTER	Desired setpoint	
-LOOPS	**LOOPS**	Input number of loops
-ENTER	Desired number of loops	
-PROG/STORE	**FILE?**	
-ENTER	Current bath temperature	

Use Table 3 to abort programming at any time.

TABLE 3

Keypad input	Main Display	Comments
-ENTER	**- - - - -**	
-PROG/STORE	**FILE?**	
-CLEAR	Current bath temperature	

Use Table 4 to scroll through a two-setpoint stored program. You would use this procedure for scrolling any number of setpoints (up to the 16 setpoint maximum).

TABLE 4

Keypad input	Main Display	Comments
-PROG/STORE	**YES**	
-ENTER	**SP-1** followed by actual value	
-ENTER	**SP-2** followed by actual value	
-ENTER	**P-1** followed by actual value	
-ENTER	**LOOPS** followed by actual value	
-ENTER	Current bath temperature	

Use Table 5 to abort scrolling through a program at any time.

TABLE 5

Keypad input	Main Display	Comments
-PROG/STORE	**FILE?**	
-ENTER	Current bath temperature	

Once Tables 1 and 2 are complete, use Table 6 to run a stored program.

TABLE 6

Keypad input	Main Display	Comments
-RUN/STOP	Current bath temperature	**PROG LED** will flash.

Use Table 7 to stop a running program.

TABLE 7

Keypad input	Main Display	Comments
-RUN/STOP	Current bath temperature	**PROG LED** will stay on steady.
-CLEAR	Current bath temperature	**PROG LED** extinguishes.

Use Table 8 to temporarily suspend a running program.

TABLE 8

Keypad input	Main Display	Comments
-RUN/STOP	Current bath temperature	**PROG LED** stays on steady.

Use Table 9 to resume a suspended program.

TABLE 9

Keypad input	Main Display	Comments
-RUN/STOP	Current bath temperature	**PROG LED** flashes.

Use Table 10 to clear a stored program.

TABLE 10

Keypad input	Main Display	Comments
-PROG/STORE	**YES**	
-PROG/STORE	**FILE?**	
-CLEAR	Current bath temperature	

Use Table 11 to add HOLD operation. (Hold must be established before running a program. The hold function is not part of the stored program.)

TABLE 11

Keypad input	Main Display	Comments
-PROG/STORE	**YES**	
-HOLD	**YES**	**HOLD** LED stays on steady.
-PROG/STORE	**FILE?**	
-ENTER	Current bath temperature	

Use Table 12 to clear hold operation.

TABLE 12

Keypad input	Main Display	Comments
-PROG/STORE	**YES**	
-HOLD	**YES**	**HOLD** LED extinguishes.
-PROG/STORE	**FILE?**	
-ENTER	Current bath temperature	

Use Table 13 to force a running program to skip ahead to the next period.

TABLE 13

Keypad input	Main Display	Comments
+/-	Current bath temperature	
-PERIOD[1]	**P-Adj**	(Period adjust)

1. PERIOD must be depressed immediately (within one second) after +/-.

Error Messages

The Main LED will indicate an error message for eight different conditions.

Error1 - Program incomplete or illogical. Re-enter the program.

Error2 - Period entered exceeds 6,500 minutes. Reenter a period.

Error3 - Entered value exceeds allowable limits. Reenter proper value.

Error4 - Loops entered greater than 9,999. Reenter loops

Error5 - Attempted to run a program without a program in memory. Build a program.

Error6 - No period or 0 entered entered for a program. Enter a period.

Error7 - With alarm - SENSOR depressed without a sensor properly connected to controller. Properly connect a sensor. (If sensor is properly connected the sensor may have failed.)
Without alarm - Internal probe failure, unit will shut off.

Error8 - Internal nonvolatile memory has failed. Press ENTER for the controller to reinitialize nonvolatile memory to factory preset parameters. **NOTE:** This will erase any program and setpoints in nonvolatile memory. The unit will have to be recalibrated.

Miscellaneous

Additional Parameters

Two parameters can also be set while the controller is deactivated (Main display shows OFF). You can adjust the light intensity of the Main display and set the controller pushbuttons to "beep" or not when depressed.

To adjust the Main display intensity first press the "±" key on the controller keyboard. Repeatedly depress the "1" key to decrease intensity or the "3" key to increase. Each press changes the intensity an incremental amount. Once the desired intensity is displayed press ENTER.

To silence the "beep" first press the "." key. Press "0" to turn the beep off or press "1" to turn it on. Next, press ENTER.

DIP Switches

Three DIP switches on the rear of the controller are operational. Switch #1 controls the temperature scale. OFF (up position) displays the temperature in °C, ON (down position) displays the temperature in °F.

Switch #6 sets the display update rate the controller uses to display temperature. This will determine how sensitive the display will be to temperature fluctuations. OFF (up position) sets a fast rate, ON (down position) sets a slow rate. (OFF causes more fluctuations than ON.)

Switch #7 controls the assured soak option for programs. ON enables assured soak.

PID Control

PID controllers are best suited for systems that may experience changing heat loads. Proportional control is combined with Integral and Derivative adjustments which allow the controller to automatically compensate for any changes from the setpoint. You may have to experiment with the PID settings to find out which are most suitable to your application.

To change or view any of the PID settings the controller must be operating.

To change or view the proportional band, press "1" and immediately, within one second, press ENTER. The "percent of span" value will flash on the Main display. Press ENTER to accept the value. To change the value press CLEAR and then enter the desired value. Press ENTER to exit this mode.

To change or view the Integral, press "2" and and immediately, within one second, press ENTER. The "repeats per minute" value will flash on the Main display. Press ENTER to accept the value. To change the value press CLEAR and then enter the desired value. Press ENTER to exit this mode.

To change or view the Derivative, press "3" and and immediately, within one second, press ENTER. The "minutes" value will flash on the screen. Press ENTER to accept the value. To change the value press CLEAR and then enter the desired value. Press ENTER to exit this mode.

Restoring Factory Preset Values

To restore the factory preset values hold the "0" button on the keypad and turn the Main Power switch on the side of the unit to the ON position. Release the "0" button and the Main display will indicate OFF. The following preset values will be installed:

P = 0.6%
I = 0.25 repeats per minute
D = 0.05 minutes

In addition, the following values will be preset

BAUD Rate = 9600
Stop bits = 1
Data Bits = 8
Parity = none

Calibration

The microprocessor controller has three different modes of calibration: Self-Cal, Two-point, and One-point. The controller is shipped from the factory with a Two-point calibration so no additional controller calibration may be required. Both the internal probe and the remote sensor input must be independently calibrated. Different calibration modes for each probe can be used if desired. The remote sensor input has been Self-Calibrated at the factory.

Self-Cal is used to initialize the analog-to-digital (A/D) converter input channel before performing the other types of calibrations. This mode removes all previous calibrations and brings the measurement error to less than 2°C. If this is the required accuracy, then no additional calibration is needed.

Two-point calibration is used to negate A/D and probe errors over the full span of the controller. This type of calibration is performed when high accuracy is desired.

One-point calibration (offset) is used to make the controller very accurate at one specific operating temperature.

One-point Calibration can be performed after a Two-point calibration as many times as desired. Each One-point calibration adds a different offset to the original Two-point calibration data (if one was already performed).

Calibration Procedures

Note: The controller should be powered at least 15 minutes before calibration to assure the electronic circuits are at operating temperature. To perform One and Two-point calibrations on the remote sensor input the unit must be in the remote sensor mode. Messages will end with CAL 1 for internal probe calibrations and CAL 2 for remote sensor calibrations.

Self-Cal: The controller must be deactivated (displaying OFF) to access this mode. Press SETPT followed by ENTER to Self-Cal the internal probe input. The message “S-CAL 1” will be followed by “done”. To Self-CAL the sensor input press SENSOR followed by ENTER. The message “S-CAL 2” followed by “done” will be displayed.

Two-point: For high accuracy measurements the controller input can be calibrated at two points. These two points (one high, one low) should be as far apart as practical for good performance.



Do not pick points that are outside the safe operating limits of the fluid in your application. For example with a water bath, 5°C and 90°C would be typical calibration points.

Before a Two-point cal, Self-cal must be performed on the desired sensor input.

With the controller on and measuring from the internal or remote probe, depending on which sensor is being calibrated, set the controller setpoint to the desired high cal temperature. When the bath reaches the setpoint and stabilizes, measure the actual bath temperature with an external calibrated thermometer. Press in quick succession “2” “.” “ENTER”. The message H-CAL # will appear followed by the flashing setpoint. Now enter in the actual bath temperature as measured by the calibrated thermometer and press ENTER. The Main display will indicate the temperature of the bath fluid (the calibrated temperature will not appear until the next step is complete).

Next set the controller setpoint to the desired low cal temperature. When the bath reaches this setpoint and stabilizes, measure the actual bath temperature with an external calibrated thermometer. Press in quick succession “2” “.” “ENTER”. The message L-CAL # will appear followed by the flashing setpoint. Now enter in the actual bath temperature as measured by the calibrated thermometer and press ENTER. The Main display will now indicate the calibrated temperature of the fluid in the bath.

One-point: Before a One-point cal, Self-cal or Two-point cal must be performed on the desired sensor.

With the controller on, and measuring from the internal or remote probe, depending on which sensor is being calibrated, set the controller setpoint to the desired temperature. When the bath reaches this setpoint and stabilizes, measure the actual bath temperature with an external calibrated thermometer. Press in quick succession “1” “.” “ENTER”. The message 1-CAL # will appear followed by the flashing setpoint. Now enter in the actual bath temperature as measured by the calibrated thermometer and press ENTER. The display will now show the calibrated temperature and all temperatures will have this offset added to them.

Calibration clear: At any point the calibration data from a One or Two-point cal can be erased by quickly pressing “2” “.” “CLEAR”. This procedure clears the calibration data only for the selected probe.

High Temperature/ Low Liquid Level Safety

To protect your application, the adjustable High Temperature/Low Liquid Level Safety (HIGH TEMP/LOW LEVEL) ensures the heater will not exceed temperatures which can cause serious damage to your unit. A single temperature sensor, located on the heater coils in the bath, monitors both conditions. A High Temperature/Low Liquid Level fault occurs when the temperature of the sensor exceeds the set temperature limit.

In the event of a fault, the unit will shut down. The cause of the fault must be identified and corrected before the unit can be restarted.

The safety on single heater systems is not preset and must be adjusted during initial installation.

Units with a boost heater have an additional nonadjustable safety located behind the main safety. It has a red reset button but no adjustment knob.

To set the safety, locate the HIGH TEMP/LOW LEVEL SAFETY adjustment dial on the right side of the pump box. Turn the dial fully clockwise and press the red RESET switch. The RESET switch is located NEXT TO the adjustment dial. **NOTE:** For units without a reset switch turn the power switch off and then back on.

Start the unit. Adjust the setpoint for a few degrees higher than the highest desired fluid temperature and allow the bath to stabilize at the temperature setpoint. Turn the HIGH TEMP/LOW LEVEL SAFETY dial counter-clockwise until you hear a click and the unit shuts down. The red FAULT LED on the temperature controller will light to indicate a fault has occurred.

NOTE: The minimum high temperature safety setting is 50°C. For units without a reset switch the temperature range is 0°C to 180°C.

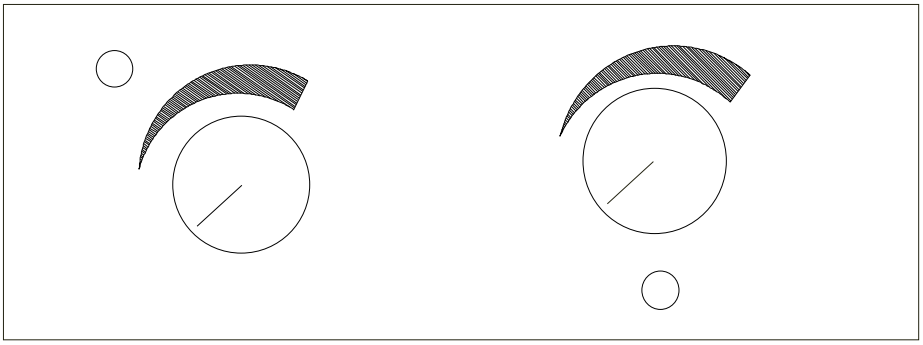

High Temperature/Low Liquid Level Safety
(Some units do not have a rese switrch.)

Section V Maintenance



To avoid electrical shock, disconnect the mains cord prior to removing any access panels or covers.

Service Contracts

Thermo NESLAB offers on-site Service Contracts that are designed to provide extended life and minimal down-time for your unit. For more information, contact our Service Department (see Preface, After-sale Support).

Reservoir Cleaning

Routine cleaning can be achieved by simply sponging down the seamless stainless steel tank with tap water. (Dish washing detergent may be used but the tank must be thoroughly rinsed.)

To gain access to the entire reservoir the pump box and reservoir cover should be removed.

Remove the line cord from the rear of the unit.

Remove the four screws securing the reservoir's cover.

Carefully raise the controller and cover assembly to remove it from unit.

Place the cover on its side.

Algae

To restrict the growth of algae in the bath, we recommend the bath cover be kept in place and that all circulation lines be opaque. This will eliminate the entrance of light required for the growth of most common algae.

Thermo NESLAB recommends rthe use ofChloramine-T, 1 gram per 3.8 liters.

Section VI Troubleshooting

Checklist

Unit will not start

Make sure the voltage of the power source meets the specified voltage, ±10%. Refer to the serial number label on the rear of the unit to identify the specific electrical requirements of your unit.

Check the High Temperature/Low Liquid Level Safety. If the FAULT light is on, make sure the fluid level in the bath is between the marks in the baffle and the HIGH TEMP/LOW LEVEL SAFETY setting is greater than the fluid temperature. Push the RESET switch(es), or, for units without a reset switch, turn the power switch off and then back on and attempt to restart.

No external circulation

Make sure the stainless steel plugs on the PUMP INLET and PUMP OUTLET have been removed.

Check for obstructions, kinks, or leaks in the circulation tubing.

Circulation will cease when the pump head has been exceeded.

No communication between bath's microprocessor and your computer

Ensure the bath's microprocessor parameters (baud rate, parity etc.) match your computer requirements.

Ensure the RS-232 light is on steady. **NOTE:** You cannot input data from the keypad when the RS-232 mode is enabled.

Check the cable. The microprocessor reads data on pin 2 and transmit data on pin 3. Ensure the cable is correctly connected. Computer 25-pin and 9-pin communication ports usually have different conventions.

Ensure the only pins connected to the microprocessor are 2, 3 and 5. All other pins must *not* be connected.

Keypad locked up

NOTE: When communication is enabled, or a program is running, data entry and many many keypad functions are disabled. This is normal operation.

If necessary, remove computer cable. Turn off the bath using the main power switch on the side of the unit. While holding the "0" button on the keypad, turn the unit back on. The Main Display will read OFF.

This will also restore the factory preset PID values and also reset the communication parameters and buffer. See Restoring Factory Preset Values on page 20.

Service Assistance and Technical Support

If, after following these troubleshooting steps, your unit fails to operate properly, contact our Customer Service Department for assistance (see Preface, After-sale Support). Before calling, please obtain the following information:

Part number
Serial number
Voltage of unit
Voltage of power source

In addition to arranging warranty service, our Service Department can provide you with a wiring diagram and a complete list of spare parts for your unit. Before calling, please obtain the following information:

Part number
Serial number

Appendix A RS-232

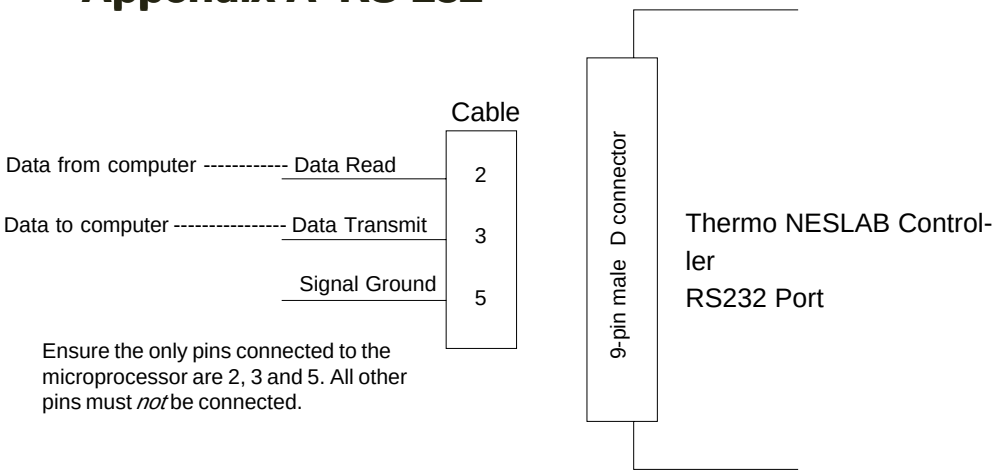

The unit can be controlled through your computer's serial port by using a standard 9-pin RS232 connection on the rear of the temperature controller. Data transmit of the serial port connects to data read (pin 2) of the bath. Data read of the serial port connects to the data transmit (pin 3) of the bath.

NOTE: Do not use a cable that connects to the unused pins on the bath communications port. This may cause a communication fault. Communication cables are available from Thermo NESLAB. Contact our sales department for additional information.

With a cable properly connected to the controller press RS232, the RS232 LED will start to flash. Press ENTER while the LED is flashing and the RS232 LED will come on steady indicating your computer's serial port can control the unit's operation.

In this mode of operation you cannot manually input data with the keypad. You can, however, observe the setpoint and/or alarm temperature limits by pressing the appropriate button on the controller. Your computer can be used to operate all modes of operation.

NOTE: When serial communication is enabled, and a temperature program is running, no keypad operations are allowed.

Communication Commands

All commands must be entered in the exact format shown in the following four tables. Do not send a [LF] (line feed) after the [CR]. Ensure the specified letter case is used. The tables on the next few pages show all commands available, their format and responses. Controller responses are either the requested data, an exclamation point (!) if the command was properly executed, or a question mark (?) if the controller could not execute the command. A question mark response indicates either an improper command format or an attempt to enter settings that are outside the allowable range. The controller response *must* be received before sending the next command.

NOTE: All responses from the bath are terminated with a single [CR] only. Wait for your computer to respond before sending the next command.

TABLE 1 GENERAL COMMANDS

Command Echo Echo: i = 1, No echo: i = 0 (control returns commands)	SEi[CR]
Set Setpoint -30.00 to +150.00°C or -22.00 to +300.00°F	SSxxx.xx[CR]
Read Setpoint	RS[CR]
Read Main Probe Temperature	RT[CR]
Read Remote Probe Temperature	RR[CR]
Turn Control On or Off On: i = 1, Off: i = 0	SOi[CR]
Set Power Status Flag Set: i = 1, Reset i = 0 (reset when controller power is lost)	SWi[CR]
Read Power Status Flag	RW[CR]
Read F or C Units	RU[CR]

TABLE 2 ALARM COMMANDS

Set High Alarm Limit Same range as setpoint	SHxxx.xx[CR]
Read High Alarm Limit	RH[CR]
Set Low Alarm Limit Same range as setpoint	SLxxx.xx[CR]
Read Low Alarm Limit	RL[CR]
Read Alarm Status Returns: 0 = no alarm, 1 = alarm	RF[CR]

TABLE 3 CONTROL COMMANDS

Set Proportional Bandwidth 0.10 to 10.00 % of full scale	SPxx.xx[CR]
Read Proportional Bandwidth	RP[CR]
Set Integral Compensation 0.00 to 10.00 repeats/minute	SIxx.xx[CR]
Read Integral Compensation	RI[CR]
Set Derivative Compensation 0.00 to 1.00 minutes	SDx.xx[CR]
Read Derivative Compensation	Rd[CR]
Main/Remote Probe Selection Main: i = 0, Remote: i = 1	Sri[CR]
Boost Heater Inhibit Inhibit: i = 0, Enable: i = 1	SBi[CR]

TABLE 4 PROGRAMMING COMMANDS

Set Step Setpoint n = step number	SYn,xxx.xx<[CR]
Read Step Setpoint	RYn[CR]
Set Step Period n = step number	SXn,xxx.xx[CR]
Read Step Period	RXn[CR]
Read Number of Steps	Rs[CR]
Set Number of Loops 0 to 9999 additional loops after first program execution	SKxxxx[CR]
Read Number of Loops	RK[CR]
Set Hold Status Hold: i = 1, No hold: i = 0	SZi[CR]
Pause/Resume Program Resume: i = 1, Pause: i = 0	SGi[CR]
End Program	SR[CR]
Read Elapsed Step Time	RE[CR]
Select Program Number	SVx[CR]
Read Selected Program Number	RV[CR]
Read Current Period	RC[CR]
Skip Ahead One Period	SJ[CR]

To set the communications data format the controller must be deactivated (Main display indicates OFF). Press the RS232 button. The word "Baud" will momentarily appear followed by the current baud rate (9600, 4800, 1200, 600 or 300). Use the keypad to enter the desired change, if any. Press ENTER and "db" will momentarily appear followed by the current number of data bits setting. Again, use the keypad to enter any desired change (7 or 8) and then press ENTER. "Sb" will momentarily appear followed by the current number of stop bits (1 or 2). Change, if needed, and press ENTER and "PAr" will momentarily appear followed by the current parity control setting (0 = none, 1 = odd, 2 = even). Change, if needed, and press ENTER.

To manually exit this mode of operation press RS232. The RS232 LED will start to flash. Press the CLEAR button and the RS232 LED will extinguish.

Communication Command Protocol

The following table lists the communication command protocol for programming the controller via a computer.Use the Ctrl - C key combination to clear the controller receiving buffer if an erroneous character is detected.

FUNCTION	SYNTAX[1]	RETURN MESSAGE[2]
SET SETPOINT	SSxxx.xx[CR]	![CR]
SET LOW LIMIT	SLxxx.xx[CR]	![CR]
SET HIGH LIMIT	SHxxx.xx[CR]	![CR]
SET PROPORTIONAL BAND[3]	SPxx.xx[CR]	![CR]
SET INTEGRAL[4]	SIxx.xx[CR]	![CR]
SET DERIVATIVE[5]	SDx.xx or Sdx.xx[CR]	![CR]
BOOST HEATER INHIBIT	SBi[CR]	![CR]
SET POWER STATUS FLAG	SWi[CR]	![CR]
SET ON/OFF	SOi[CR]	![CR]
SELECT PROGRAM NUMBER	SVx[CR]	![CR]
SET STEP SETPOINT	SYn,xxx.xx[CR]	![CR]
SET STEP PERIOD	SXn,xxx.x[CR]	![CR]
SET NUMBER OF PERIODS	Ssn[CR]	![CR]
SET NUMBER OF LOOPS	SKxxxx[CR]	![CR]
SET HOLD STATUS	SZi[CR]	![CR]
END PROGRAM	SR[CR]	![CR]
ECHO CONTROL[6]	SEi[CR]	![CR]
REMOTE SENSOR CONTROL	Sri[CR]	![CR]
SUSPEND/RESUME PROGRAM	SGi[CR]	![CR]
SKIP AHEAD ONE PERIOD	SJ[CR]	![CR]
READ SETPOINT	RS[CR]	xxx.xx[CR]
READ TEMPERATURE	RT[CR]	xxx.xx[CR]
READ ALARM STATUS	RF[CR]	![CR]
READ REMOTE TEMPERATURE	RR[CR]	xxx.xx[CR]
READ UNITS	RU[CR]	C[CR] or F[CR]
READ CURRENT PERIOD	RC[CR]	xx[CR]
READ ELAPSED TIME	RE[CR]	xxx.x[CR]
READ LOW LIMIT	RL[CR]	xxx.xx[CR]
READ HIGH LIMIT	RH[CR]	xxx.xx[CR]
READ PROPORTIONAL BAND	RP[CR]	xx.xx[CR]
READ INTEGRAL	RI[CR]	xx.xx[CR]
READ DERIVATIVE	Rd[CR]	x.xx[CR]
READ PROGRAM NUMBER	RV[CR]	x[CR]
READ STEP SETPOINT	RYn[CR]	xxx.xx[CR]
READ STEP PERIOD	RXn[CR]	xxx.x[CR]
READ NUMBER OF STEPS	Rs[CR]	x[CR]
READ NUMBER OF LOOPS	RK[CR]	xxxx[CR]
READ POWER STATUS	RW[CR]	x[CR]

1. x = ASCI digit, i = 0 (OFF or STOP) i = 1 (ON or GO), n = step number.
2. Ensure the return message is correct. If not, resend or troubleshoot communication lines.
3. Factory preset at 0.6%.
4. Factory preset at 0.25 repeats per minute.
5. Factory preset at 0.05 minutes.
6. Allows computer to compare send signal to receive signal.

Remote Programming

The bath can be programmed and controlled by a remote computer. Enter step setpoints using the SYn command, time periods using the SXn command, number of loops using the SKxxxx command and number of periods in the program using the Ssn command. Start the program using SG1 and suspend the program using SG0. When the program is finished it will stop automatically. If needed, SR will end the program at any time. Here is a four setpoint, two loop example:

SV1[CR]	Select program number one
SY1,25.00[CR]	First setpoint = 25.00 degrees
SX1,20.0[CR]	First period = 20.0 minutes
SY2,40.00[CR]	Second setpoint = 40.00 degrees
SX2,60.0[CR]	Second period = 60.0 minutes
SY3,40.00[CR]	Third setpoint = 40.00 degrees
SX3,45.0[CR]	Third period = 45.0 minutes
SY4,25.00[CR]	Fourth setpoint = 25.00 degrees
Ss3[CR]	Program has three periods
SK2[CR]	Execute the program three times total
SG1[CR]	Begin executing program
SG0[CR]	Temporarily suspend the program
SR[CR]	Stop the program before it is finished

WARRANTY

Thermo NESLAB Instruments, Inc. warrants for 12 months from date of shipment any Thermo NESLAB unit according to the following terms.

Any part of the unit manufactured or supplied by Thermo NESLAB and found in the reasonable judgment of Thermo NESLAB to be defective in material or workmanship will be repaired at an authorized Thermo NESLAB Repair Depot without charge for parts or labor. The unit, including any defective part must be returned to an authorized Thermo NESLAB Repair Depot within the warranty period. The expense of returning the unit to the authorized Thermo NESLAB Repair Depot for warranty service will be paid for by the buyer. NESLAB's responsibility in respect to warranty claims is limited to performing the required repairs or replacements, and no claim of breach of warranty shall be cause for cancellation or recision of the contract of sales of any unit.

With respect to units that qualify for field service repairs, Thermo NESLAB's responsibility is limited to the component parts necessary for the repair and the labor that is required on site to perform the repair. Any travel labor or mileage charges are the financial responsibility of the buyer.

The buyer shall be responsible for any evaluation or warranty service call (including labor charges) if no defects are found with the Thermo NESLAB product.

This warranty does not cover any unit that has been subject to misuse, neglect, or accident. This warranty does not apply to any damage to the unit that is the result of improper installation or maintenance, or to any unit that has been operated or maintained in any way contrary to the operating or maintenance instructions specified in Thermo NESLAB's Instruction and Operation Manual. This warranty does not cover any unit that has been altered or modified so as to change its intended use.

In addition, this warranty does not extend to repairs made by the use of parts, accessories, or fluids which are either incompatible with the unit or adversely affect its operation, performance, or durability.

Thermo NESLAB reserves the right to change or improve the design of any unit without assuming any obligation to modify any unit previously manufactured.

THE FOREGOING EXPRESS WARRANTY IS IN LIEU OF ALL OTHER WARRANTIES, EXPRESSED OR IMPLIED, INCLUDING BUT NOT LIMITED TO WARRANTIES OR MERCHANTABILITY AND FITNESS FOR A PARTICULAR PURPOSE.

NESLAB'S OBLIGATION UNDER THIS WARRANTY IS STRICTLY AND EXCLUSIVELY LIMITED TO THE REPAIR OR REPLACEMENT OF DEFECTIVE COMPONENT PARTS AND Thermo NESLAB DOES NOT ASSUME OR AUTHORIZE ANYONE TO ASSUME FOR IT ANY OTHER OBLIGATION.

Thermo NESLAB ASSUMES NO RESPONSIBILITY FOR INCIDENTAL, CONSEQUENTIAL, OR OTHER DAMAGES INCLUDING, BUT NOT LIMITED TO LOSS OR DAMAGE TO PROPERTY, LOSS OF PROFITS OR REVENUE, LOSS OF THE UNIT, LOSS OF TIME, OR INCONVENIENCE.

This warranty applies to units sold in the United States. Any units sold elsewhere are warranted by the affiliated marketing company of Thermo NESLAB Instruments, Inc. This warranty and all matters arising pursuant to it shall be governed by the law of the State of New Hampshire, United States. All legal actions brought in relation hereto shall be filed in the appropriate state or federal courts in New Hampshire, unless waived by Thermo NESLAB.

FTC-350A
Flow Through Cooler

Thermo NESLAB Manual P/N 002679
Rev. 11/08/00

Instruction and Operation Manual

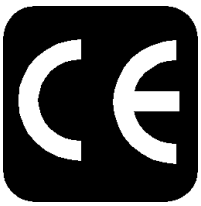

FTC-350A Flow Through Cooler
Instruction and Operation Manual

PREFACE

Compliance 2
Unpacking 2
Warranty 2
NES-care 2
After-sale Support 2

SECTION I
Safety

Warnings 3

SECTION II
General Information

Description 4
Specifications 4

SECTION III
Installation

Site 4
Air Intake 5
Electrical Requirements 5
Plumbing Requirements 6
Fluids 7
Filling Requirements 7

SECTION IV
Operation

Start Up 8
Flow Control Switch (Optional) 8

SECTION V
Maintenance/
Troubleshooting

Cleaning 9
Checklist 9
Service Assistance 10

SECTION VII
Warranty 11

Preface

Compliance

Products tested and found to be in compliance with the requirements defined Products tested and found to be in compliance with the requirements defined in the EMC standards defined by 89/336/EEC as well as Low Voltage Directive (LVD) 73/23/EEC can be identified by the CE label on the rear of the unit. The testing has demonstrated compliance with the following directives:

LVD, 73/23/EEC	Complies with UL 3101-1:93
EMC, 89/336/EEC	EN 55011, Class A Verification EN 50082-1:1992 IEC 1000-4-2:1995 IEC 1000-4-3:1994 IEC 1000-4-4:1995

For any additional information refer to the Letter of Compliance that shipped with the unit (Declaration of Conformity).

Unpacking

Retain all cartons and packing material until the unit is operated and found to be in good condition. If the unit shows external or internal damage, or does not operate properly, contact the transportation company and file a damage claim. Under ICC regulations, this is your responsibility.

Warranty

Units have a one year warranty against defective parts and workmanship from date of shipment. See back page for more details.

NES-care Extended Warranty Contract

- Extend parts and labor coverage for an additional year.
- Worry-free operation.
- Control service costs.
- Eliminate the need to generate repair orders.
- No unexpected repair costs.

Other contract options are available. Please contact Thermo NESLAB.

After-sale Support

Thermo NESLAB is committed to customer service both during and after the sale. If you have questions concerning the operation of your unit, contact our Sales Department. If your unit fails to operate properly, or if you have questions concerning spare parts or Service Contracts, contact our Customer Service Department. Before calling, *please* obtain the following information from the unit's serial number label:

- *BOM number* _____
- *Serial number* _____

Section I Safety

Warnings

Make sure you read and understand all instructions and safety precautions listed in this manual before installing or operating your unit. If you have any questions concerning the operation of your unit, or the information in this manual, contact our Sales Department for assistance.

Performance of installation, operation, or maintenance procedures other than those described in this manual may result in a hazardous situation and may void the manufacturer's warranty.

Transport the unit with care. Sudden jolts or drops can damage the refrigeration lines.

Observe all warning labels.

Never remove warning labels.

Never operate damaged or leaking equipment.

Always turn off the unit and disconnect the line cord from the power source before performing any service or maintenance procedures, or before moving the unit.

Never operate equipment with damaged line cords.

Refer service and repairs to a qualified technician.

In addition to the safety warnings listed above, warnings are posted throughout the manual. These warnings are designated by an exclamation mark inside an equilateral triangle with text highlighted in bold print. Read and follow these important instructions. Failure to observe these instructions can result in permanent damage to the unit, significant property damage, or personal injury or death.

Section II General Information

Description

The FTC-350A Flow Through Cooler is a mechanical refrigeration unit designed to allow a Thermo NESLAB EXACAL bath/circulator to operate at temperatures from +40°C to -20°C. The FTC-350A can also be used in conjunction with an EXACAL bath/circulator to maintain or cool the temperature of a closed loop external system.

The unit consists of an air-cooled refrigeration system and a stainless steel heat exchanger.

The unit incorporates design features to prevent damage to the unit in the event that the circulating fluid freezes. If temperatures below 8°C are desired, a non-freezing fluid should be used.

Specifications

Cooling Capacity[1]	450 Watts @ 20°C 180 Watts @ 0°C
Unit Dimensions (HxWxD) *Inches* *Centimeters*	 14 x 8¾ x 12 35.8 x 22.2 x 30.5
Compressor	¼ h p
Heat Exchanger	Stainless Steel

1. Cooling capacity at +25°C ambient, fluid temperature 20°C.
   Specific heat of cooling fluid is 0.5.

Section III Installation

Site

The unit should be placed on a sturdy bench or table. Ambient temperatures should be in the range of +50°F to +90°F (+10°C to +32°C). Never locate the unit where excessive heat, moisture, or corrosive materials are present.

The unit has an air-cooled refrigeration system. Air is drawn through the top of the unit and discharged through the sides and the rear of the unit. The unit should be positioned so the intake and discharge are not impeded. A minimum clearance of 1.5 feet (0.5 meters) on all four sides is necessary for adequate ventilation.

Excessively dusty areas should be avoided and a periodic cleaning schedule should be instituted (see Section VI, Maintenance).

The unit will retain its full rated cooling capacity in ambient temperatures up to approximately +75°F (+24°C). Reduce the cooling capacity 1% for every 1°F above +75°F, up to a maximum ambient temperature of +90°F. In terms of Celsius, reduce the cooling capacity 1% for every 0.5°C above +24°C, up to a maximum ambient temperature of +32°C.

Air Intake

The approximate air intake through the condenser is 200 cubic feet/minute (1 cubic foot = 28.35 liters).

Electrical Requirements

Refer to the table below for the specific electrical requirements of your unit.

Volts	115	220/240
Hertz	60	50
Amps	4.5	2.3

Make sure the voltage the power source meets the specified voltage of the unit, ±10%.

Plumbing Requirements

The inlet and outlet connections are located at the rear of the unit and labelled INLET and OUTLET. These connections are 3/8 inch OD stainless steel serrated tubing. These connections will accept 3/8 or 5/16 inch ID flexible tubing.

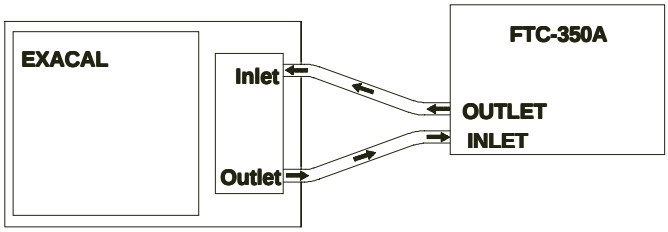

Connect the FTC-350A INLET to the outlet of the EXACAL circulating pump.

Connect the FTC-350A OUTLET to the inlet of the EXACAL circulating pump.

Keep all tubing as short as possible and free of kinks. All tubing should be insulated to prevent the loss of cooling capacity. Tubing and insulation are available from Thermo NESLAB. Contact our Sales Department for more information.

The FTC-350A can be used in conjunction with an EXACAL bath/circulator to maintain or cool temperatures in a closed loop external system. In this case, connect the EXACAL circulation pump to the external system inlet. Connect the external system outlet to the INLET of the FTC-350A.

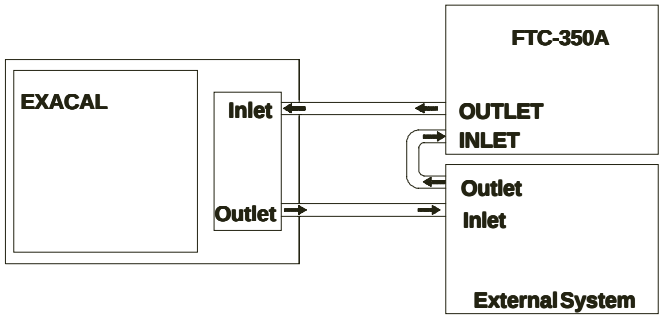

Use of tubing less than 3/8 inch ID is not recommended and will cause a significant deration of flow. If it is necessary to make a reduction in the tubing size to fit external equipment, the reduction should be made at the inlet of the external equipment, not at the pump outlet. The tubing connecting the external equipment and the FTC-350A should be increased to 3/8 inch ID tubing at the outlet of the external equipment.

Fluids

Filtered tap water is the recommended fluid for operation above +8°C.

Below +8°C, a non-freezing fluid must be used. A 50/50 mixture, by volume, of water and laboratory grade ethylene glycol is recommended.



Do not use automobile anti-freeze. Commercial anti-freeze contains silicates that can damage the equipment.

The selected fluid must have a viscosity of 50 centistokes or less at the lowest operating temperature. Never use flammable or corrosive fluids with this unit.

Filling Requirements

Refer to the filling requirements in the EXACAL bath/circulator manual for complete instructions.

Section IV Operation

Start Up

Never operate the FTC-350A when the EXACAL bath/circulator operating temperature is above +40°C. Excessively hot fluid can damage the heat exchanger in the FTC-350A. Allow the EXACAL bath/circulator to cool below +40°C before starting the unit.



The EXACAL bath/circulator must be operating and pumping fluid through the FTC-350A before the FTC-350A can be turned on. If the FTC-350A is turned on before flow is established, the heat exchanger may be permanently damaged.

Make sure the electrical and plumbing connections are correct (see Section II, Electrical Requirements and Plumbing Requirements) and the unit has been properly filled (see Section II, Fluids and Filling Requirements).

Place the POWER switch in the ON position. The POWER switch will light and the refrigeration system will start.



When shutting down the system, turn off the FTC-350A first and allow 15 minutes before turning off the Exacal bath/circulator. Again, this is to prevent damage to the heat exchanger.

When the FTC-350A is shut off, allow about five minutes before restarting the unit. This allows time for the refrigeration pressures to equalize. If the pressures do not equalize, the refrigeration compressor will short cycle (clicking sound) and no cooling will occur.

Flow Control Switch (Optional)

The flow control switch is designed to protect the unit's heat exchanger from freezing in the event flow from the external bath is stopped. Should the flow rate drop below 2.5 liters per minute the unit will shut down and the FAULT light will illuminate. The unit will restart once the flow rate is restored.

The unit will not start unless the flow rate is higher than 2.5 liters per minute. If sufficient flow is supplied and the unit still will not start, the flow switch may be dirty. Contact our Customer Service Department for instructions on flow switch removal and cleaning.

Section V Maintenance & Troubleshooting

Cleaning

The unit pulls a substantial amount of air through a finned condenser. This condenser, located on top of the unit (air intake), is covered with a filter. A buildup of dust or debris on this filter will impede air flow and may result in a loss of cooling capacity.

Periodic vacuuming of the filter is necessary. The vacuuming frequency depends on the operating environment. We recommend a monthly visual after initial installation. After several months, the cleaning frequency of required should be established.

The filter may be removed and cleaned as follows. Place the edge of the unit over the edge of the bench and remove two screws from either side of the unit. Slide the cover off. Remove the filter, rinse in water, allow it to dry, then replace in the unit.

Checklist

Unit will not start.

Check house circuit breaker.

Check power source for correct voltage output. Power source must be specified voltage, ±10%. Refer to the serial number label on the rear of your unit for the specific electrical requirements.

Loss of cooling capacity.

Check the condenser. A build up of dust or debris can cause a loss of cooling capacity. If dust or debris has accumulated, vacuum the condenser filter (see Section V, Cleaning).

Make sure the heat load has not overcome the cooling capacity of the FTC-350A (see Section I, Specifications).

After the FTC-350A has been shut off, allow five minutes before restarting. The refrigeration compressor will short cycle (clicking sound) if time is not allowed for refrigeration pressures to equalize (see Section IV, Start Up).

The FTC-350A requires proper ventilation for heat removal. If ventilation is poor, the refrigeration compressor will shut down due to heat build up. Ensure the air intake and discharge are not impeded (see Section III, Site).

Check the ambient temperature where the unit is being operated. The ambient range of the unit is +50°F to +90°F (+16°C to +32°C). The unit will retain its full rated capacity in ambient temperatures up to approximately +75°F. Reduce the cooling capacity 1% for every 1°F above +75°F, up to a maximum ambient temperature of +90°F. In terms of Celsius, reduce the cooling capacity 1% for every 0.5°C above +24°C, up to a maximum ambient temperature of +32°C.

Ensure the fluid is suitable for the temperature range (see Section III, Fluids).

Ice build up on the cooling coil in the EXACAL bath/circulator can act as insulation and lower the cooling capacity of the unit. Raise the operating temperature of the EXACAL bath/circulator to de-ice the cooling coil.

Ensure the HEATER light on the pump box of the EXACAL bath/circulator is cycling and not staying on continuously.

No flow through FTC-350

If water is being used as the fluid at temperatures close to freezing, it is possible to freeze the water in the exchanger which will block flow. Shut off the FTC-350 and allow the exchanger to thaw out.

A non-freezing fluid must be used for operation below +8°C.

Service Assistance

If, after following these troubleshooting steps, your unit fails to operate properly, contact our Service Department for assistance. Phone numbers and addresses for all our Thermo NESLAB Sales and Service Centers are located in the back cover of this manual. Before calling, *please* obtain the following:

BOM Number
Serial Number
Voltage
Ambient temperature where the unit is being operated

WARRANTY

Thermo NESLAB Instruments, Inc. warrants for 12 months from date of shipment any Thermo NESLAB unit according to the following terms.

Any part of the unit manufactured or supplied by Thermo NESLAB and found in the reasonable judgment of Thermo NESLAB to be defective in material or workmanship will be repaired at an authorized Thermo NESLAB Repair Depot without charge for parts or labor. The unit, including any defective part must be returned to an authorized Thermo NESLAB Repair Depot within the warranty period. The expense of returning the unit to the authorized Thermo NESLAB Repair Depot for warranty service will be paid for by the buyer. NESLAB's responsibility in respect to warranty claims is limited to performing the required repairs or replacements, and no claim of breach of warranty shall be cause for cancellation or recision of the contract of sales of any unit.With respect to units that qualify for field service repairs, NESLAB's responsibility is limited to the component parts necessary for the repair and the labor that is required on site to perform the repair. Any travel labor or mileage charges are the financial responsibility of the buyer.

The buyer shall be responsible for any evaluation or warranty service call (including labor charges) if no defects are found with the Thermo NESLAB product.

This warranty does not cover any unit that has been subject to misuse, neglect, or accident. This warranty does not apply to any damage to the unit that is the result of improper installation or maintenance, or to any unit that has been operated or maintained in any way contrary to the operating or maintenance instructions specified in NESLAB's Instruction and Operation Manual. This warranty does not cover any unit that has been altered or modified so as to change its intended use.

In addition, this warranty does not extend to repairs made by the use of parts, accessories, or fluids which are either incompatible with the unit or adversely affect its operation, performance, or durability.

Thermo NESLAB reserves the right to change or improve the design of any unit without assuming any obligation to modify any unit previously manufactured.

THE FOREGOING EXPRESS WARRANTY IS IN LIEU OF ALL OTHER WARRANTIES, EXPRESSED OR IMPLIED, INCLUDING BUT NOT LIMITED TO WARRANTIES OR MERCHANTABILITY AND FITNESS FOR A PARTICULAR PURPOSE.

NESLAB'S OBLIGATION UNDER THIS WARRANTY IS STRICTLY AND EXCLUSIVELY LIMITED TO THE REPAIR OR REPLACEMENT OF DEFECTIVE COMPONENT PARTS AND Thermo NESLAB DOES NOT ASSUME OR AUTHORIZE ANYONE TO ASSUME FOR IT ANY OTHER OBLIGATION.

Thermo NESLAB ASSUMES NO RESPONSIBILITY FOR INCIDENTAL, CONSEQUENTIAL, OR OTHER DAMAGES INCLUDING, BUT NOT LIMITED TO LOSS OR DAMAGE TO PROPERTY, LOSS OF PROFITS OR REVENUE, LOSS OF THE UNIT, LOSS OF TIME, OR INCONVENIENCE.

This warranty applies to units sold in the United States. Any units sold elsewhere are warranted by the affiliated marketing company of Thermo NESLAB Instruments, Inc. This warranty and all matters arising pursuant to it shall be governed by the law of the State of New Hampshire, United States. All legal actions brought in relation hereto shall be filed in the appropriate state or federal courts in New Hampshire, unless waived by Thermo NESLAB.

GP Series
Constant Temperature
Bath and Circulator

NESLAB Manual P/N U00222
Rev . 07/16/97

Instruction and Operation Manual

GP-Series Constant Temperature Bath and Circulator Instruction and Operation Manual

Table of Contents

PREFACE

Compliance 2
Unpacking 2
Warranty 2
After-sale Support 2

SECTION I
Safety

Warnings 3

SECTION II
General Information

Description 4
Specifications 4

SECTION III
Installation

Site 6
Electrical Requirements 6
Plumbing Requirements 6
Fluids 7
Filling Requirements 7

SECTION IV
Operation

Digital Controller 8
High Temperature/Low Liquid Level Safety 9
Tap Water Cooling Coil 10

SECTION V
Maintenance

Service Contracts 11
Cleaning 11
Algae 11

SECTION VI
Troubleshooting

Checklist 12
Service Assistance 12
Technical Support 12

SECTION VII
Warranty 13

Preface

Compliance

Products tested and found to be in compliance with the requirements defined in the EMC standards defined by 89/336/EEC as well as Low Voltage Directive (LVD) 73/23/EEC can be identified by the CE label on the rear of the unit. The testing has demonstrated compliance with the following directives:

LVD, 73/23/EEC	Complies with UL 3101-1:93
EMC, 89/336/EEC	EN 55011, Class A Verification EN 50082-1:1992 IEC 1000-4-2:1995 IEC 1000-4-3:1994 IEC 1000-4-4:1995

For any additional information refer to the Letter of Compliance that shipped with the unit (Declaration of Conformity).

Unpacking

Retain all cartons and packing material until the unit is operated and found to be in good condition.

If the unit shows external or internal damage, or does not operate properly, contact the transportation company and file a damage claim. Under ICC regulations, this is your responsibility.

Warranty

The unit has a warranty against defective parts and workmanship is for one full year from date of shipment. See back page for more details.

After-sale Support

NESLAB is committed to customer service both during and after the sale. If you have questions concerning the operation of your unit, contact our Sales Department. If your unit fails to operate properly, or if you have questions concerning spare parts or Service Contracts, contact our Customer Service Department. Before calling, please obtain the following information from the unit's serial number label:

- *BOM number* _____

- *Serial number* _____

Section I Safety

Warnings

Make sure you read and understand all instructions and safety precautions listed in this manual before installing or operating your unit. If you have any questions concerning the operation of your unit or the information in this manual, contact our Sales Department. Addresses and phone numbers for all our NESLAB Sales and Service Centers are printed on the back cover of this manual.

Performance of installation, operation, or maintenance procedures other than those described in this manual may result in a hazardous situation and may void the manufacturer's warranty.

Observe all warning labels.

Never remove warning labels.

Never operate damaged or leaking equipment.

Never use flammable or corrosive fluids with this unit.

Never operate the unit without bath fluid in the bath.

Always turn off the unit and disconnect the line cord from the power source before performing any service or maintenance procedures, or before moving the unit.

Always empty the bath before moving the unit.

Never operate equipment with damaged line cords.

Refer service and repairs to a qualified technician.

In addition to the warnings listed above, warnings are posted throughout the manual. These warnings are designated by an exclamation mark inside an equilateral triangle with text highlighted in bold print. Read and follow these important instructions. Failure to observe these instructions can result in permanent damage to the unit, significant property damage, or personal injury, or death.

Section II General Information

Description

The GP-Series Constant Temperature Baths are designed to provide temperature control for applications requiring a fluid work area or pumping to an external system.

The units consist of a heater, stirrer or optional circulation pump, stainless steel bath, and temperature controller.

Specifications

	GP Series
Temperature Range	
Analog Controller	ambient to +150°C
Digital Controller	ambient to +150°C
Temperature Stability[1]	±0.03°C
Pump Capacity[1,2]	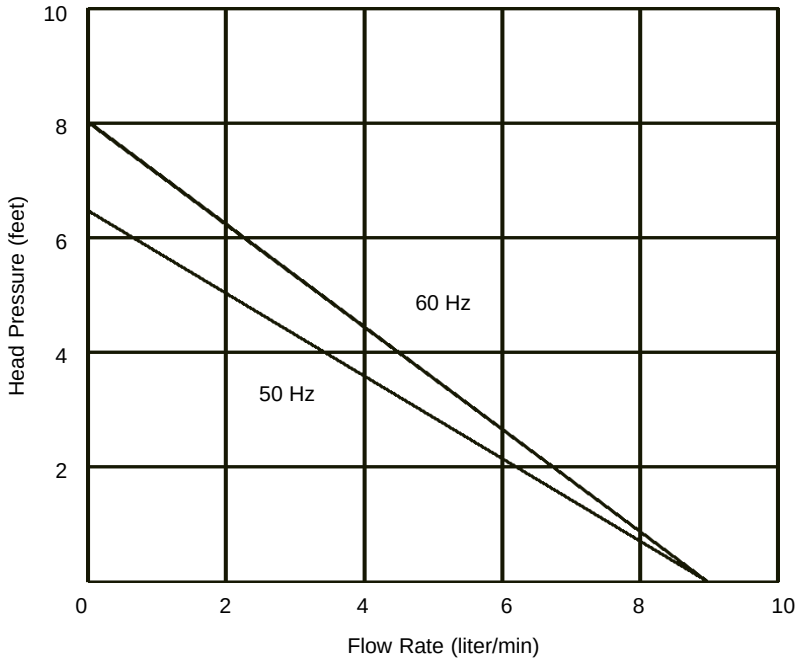

1. Specifications listed for units operating at +37°C bath temperature, +21°C (+70°F) ambient, with tap water as bath fluid.
2. The circulation pump is an optional feature. It is factory installed and must be specified at the time of order.

	GP-100	GP-200	GP-300
Heater			
Watts	1200		
Bath Work Area			
(L x W x D)			
Inches	5 x 6 x 5¾	10 x 10 3/8 x 5¾	10 x 10 3/8 x 8½
Centimeters	12.7 x 15.2 x 14.6	25.4 x 26.4 x 14.6	25.4 x 26.4 x 21.6
Bath Volume			
Gallons	1.3	3.2	5.25
Liters	5.0	12.0	20.0
Unit Dimensions			
(H x W x D)			
Inches	14¼ x 8¾ x 13	14¼ x 12½ x 18½	17 5/8 x 12½ x 18½
Centimeters	36.2 x 22.2 x 33.0	36.2 x 31.7 x 47.0	44.7 x 31.7 x 47.0
Power Requirements			
Volts	115	or	220/240
Hz	60		50
Amps	12		7
Shipping Weight			
Pounds	33	49	54
Kilograms	15	23	25

	GP-400	GP-500
Heater		
Watts	1200	
Bath Work Area		
(L x W x D)		
Inches	20 x 10 3/8 x 5 ¾	17 x 10 3/8 x 11½
Centimeters	50.8 x 26.4 x 14.6	43.2 x 26.4 x 29.2
Bath Volume		
Gallons	5.5	11
Liters	21	42
Unit Dimensions		
(H x W x D)		
Inches	14¼ x 12½ x 28¼	20½ x 12½ x 25½
Centimeters	36.2 x 31.7 x 71.8	52.1 x 31.7 x 64.8
Power Requirements		
Volts	115	220/240
Hz	60 or	50
Amps	12	7
Shipping Weight		
Pounds	65	130
Kilograms	30	60

Section III Installation

Site

The unit should be located on a sturdy table or bench top. Ambient temperatures should be inside the range of +50°F to +90°F (+10°C to +32°C).



Never place the unit in a location where excessive heat, moisture, or corrosive materials are present.

A minimum clearance of 6 inches (15 centimeters) between the rear of the unit and the nearest wall is required for adequate ventilation through the pump box. This space will also accommodate the pump connections, the tap water cooling coil connections.

Excessively dusty areas should be avoided and a periodic cleaning schedule should be instituted (see Section VI, Cleaning).

Electrical Requirements



The unit construction provides extra protection against the risk of electric shock by grounding appropriate metal parts. The extra protection may not function unless the power cord is connected to a properly grounded outlet. It is your responsibility to assure that a proper ground connection is provided.

50 Hertz units are equipped with an IEC320 C14 power inlet receptacle. Use the appropriate line cord with respect to the unit's rated voltage.

Refer to the serial number label on the rear of the unit to identify the specific electrical requirements of your unit.

Ensure the voltage of the power source meets the specified voltage, ±10%.

Plumbing Requirements

Hose Connections (if equipped with circulation pump)
The pump connections are located at the rear of the pump box and are labelled. These connections are stainless steel serrated hose connections that accept $^{3}/_{8}$ inch ID flexible tubing.

Flexible tubing, if used, should be of heavy wall or reinforced construction. Make sure all tubing connections are securely clamped. Avoid running tubing near radiators, hot water pipes, etc. If substantial lengths of tubing are necessary, insulation may be required for improved temperature control.

Please consider hard plumbing circulation lines when excessively high fluid temperatures are required.

Tubing and insulation are available from NESLAB. Contact our Sales Department for more information (see Preface, After-sale Support).

Pumping (if equipped)
The pump is designed to deliver a flow of 9 liters/minute (2.3 gallons/ minute) at 0 feet of head. To prevent unwanted flow, the bath is supplied with two stainless steel disks which block the PUMP INLET and PUMP OUTLET.

The disks must be removed when flow is required. To prevent leaking around the inlet and outlet connections, be sure the two Teflon® O-rings remain in place. To prevent distortion of the O-rings, only tighten the connections "hand tight." Once the hose connections are made, the pump must be properly plumbed to an external system. It is important the bath is not in operation when all plumbing work is done.

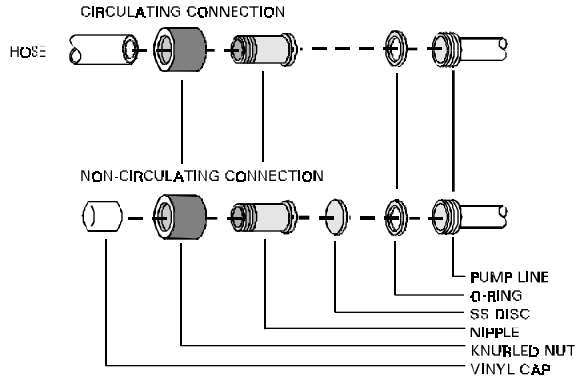

It is important to keep the distance between the unit and the external system as short as possible, and to use the largest diameter tubing practical. Tubing should be straight and without bends. If diameter reductions must be made, make them at the inlet and outlet of the external system, not at the unit.

If the bath is not used for external circulation, make sure the stainless steel disks are in place prior to operating the bath.

Fluids

Tap water is the recommended fluid for operation from ambient to +80°C.

Above +80°C, the user is responsible for fluids used.

Never use flammable or corrosive fluids with this unit.

Filling Requirements

The bath work area has a high and low level marker to guide filling. The markers are 1 inch horizontal slits located in the center of the stainless steel baffle that separates the work area and the pump assembly. The correct fluid level falls between these two markers. If the correct fluid level is not maintained, the heater will be exposed and may become damaged.

When pumping to an external system, keep extra fluid on hand to maintain the proper level as the circulating lines and external system are filled.

Never run the unit when the work area is empty.

Section IV Operation

Digital Controller

Start Up

Before starting the unit, double check all electrical and plumbing connections and make sure the work area has been properly filled with bath fluid.

To start the unit, press the MAIN circuit breaker located on the rear of the control box. The pump will start and the DEGREE CELSIUS LED display will indicate the temperature of the bath fluid.

Temperature Adjustment

To display the temperature setpoint, press the DISPLAY button. To adjust the setpoint, press the DISPLAY button and turn the COARSE and FINE dials until the temperature setpoint is indicated on the LED display.

NOTE: Inadvertent movement of the COARSE and/or FINE dials, regardless of the position of the DISPLAY button, will result in a change in the setpoint. This change will not be immediately reflected on the LED display, unless the DISPLAY button is pressed. The display will eventually change as the unit responds to the new setpoint

The HEAT LAMP indicates the status of the heater. As the temperature of the fluid in the bath approaches the temperature setpoint, the LAMP will cycle on and off to indicate the approximate duty cycle of the heater.

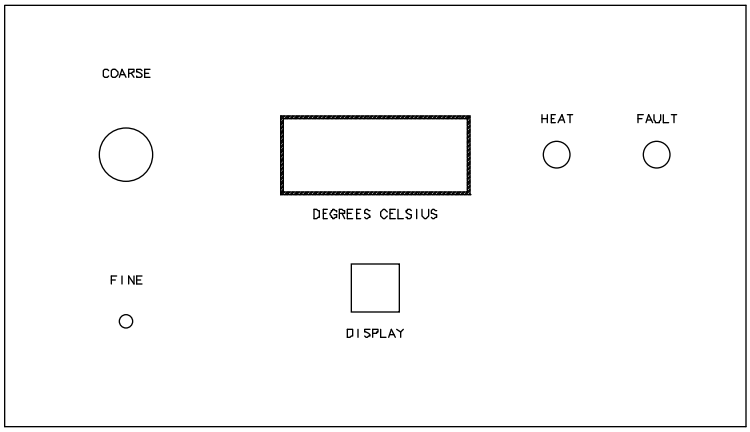

Temperature Controller (Front View)

High Temperature/ Low Liquid Level Cutout

The unit is equipped with an adjustable High Temperature/Low Liquid Level Cutout (HIGH TEMP/LOW LEVEL SAFETY). The cutout prevents the heater from reaching excessively high temperatures that can cause serious damage to the unit. A single temperature sensor, located on the heater coils in the bath, is used to monitor both conditions. A High Temperature/Low Liquid Level fault occurs when the temperature of the sensor exceeds the set temperature limit. In the event of a fault, the unit will shut down. The cause of the fault must be identified and corrected before the unit can be restarted.

The temperature range of the cutout is 0°C to 180°C.

The cutout is not preset and must be adjusted during initial installation.

To set the cutout , locate the adjustment dial on the rear of the control box. It is labelled HIGH TEMP/LOW LEVEL SAFETY. Turn the dial fully clockwise.

Start the unit. Adjust the temperature setpoint for a few degrees higher than the highest desired operating temperature and allow the bath to stabilize at the setpoint. Turn the HIGH TEMP/LOW LEVEL SAFETY dial counter-clockwise until you hear a click and the unit shuts down. The red FAULT lamp on the front of the pump box will light to indicate a fault has occurred.

The cutout is now set. Allow the fluid to cool below the cutout temperature and then, without moving the adjustment dial, turn the MAIN circuit breaker off then back on to reset the cutout.

If a fault occurs, the MAIN circuit breaker must be turned off and then back on before the unit will start.

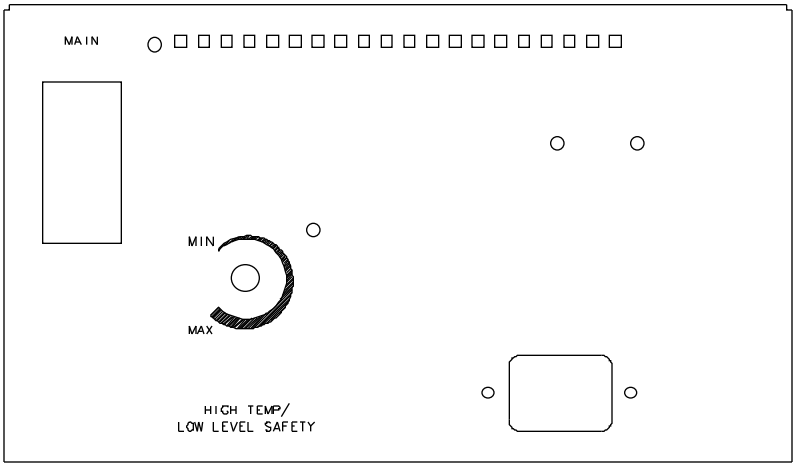

Temperature Controller (Rear View)

Tap Water Cooling Coil

The unit is equipped with a cooling coil located in the bath. The work area can be cooled and temperature stability improved by circulating cold fluid through the coil. For best results, the fluid should be 5°C or more below the temperature setpoint. The required flow rate of the fluid depends on the type of fluid and the setpoint.

The plumbing connections for the cooling coil are 3/8 inch OD stainless steel tubes located at the rear of the pump box. These connections will accept 3/8 or 5/16 inch ID flexible tubing. A 3/8 inch ID is the minimum recommended tubing diameter. Tubing is available from NESLAB. Contact our Sales Department for more information (see Preface, After-sale Support).

Connect one COOLING COIL tube to the cold fluid source. Connect the other COOLING COIL tube to the cold fluid return (or drain, if tap water is being used).

Section V Maintenance

Service Contracts

NESLAB offers on-site Service Contracts that are designed to provide extended life and minimal downtime for your unit. For more information, contact our Customer Service Department (see Preface, After-sale Support).

Cleaning

Periodically clean the case and stainless steel bath using a mild soapy solution. **Do not use steel wool; its abrasiveness will lead to rusting.** Dry the bath using a soft cloth.

Algae

To restrict the growth of algae in the bath, it is recommended that the bath cover be kept in place and that all circulation lines be opaque. This will minimize the entrance of light which is required for the growth of most common algae.

NESLAB recommends the use of Chloramine-T, one gram per gallon.

Section VI Troubleshooting

Checklist

Unit will not start

Ensure the voltage of the power source meets the specified voltage ±10%. Refer to the serial number label on the rear of the unit to identify the specific electrical requirements of your unit.

Check the High Temperature/Low Liquid Level Safety. If the FAULT light is on, make sure the fluid level in the bath is between the marks in the baffle and the HIGH TEMP/LOW LEVEL SAFETY setting is greater than the bath temperature. Turn the MAIN circuit breaker off and the back on and attempt to restart.

No display on temperature controller

The controller's transformer is circuit protected by a 1/8 Amp, 250 Volt Time Delay 5 mm x 20 mm fuse. Check the fuse.

No external circulation

Make sure the stainless steel disks on the PUMP INLET and PUMP OUTLET have been removed.

Check for obstructions, kinks, or leaks in the circulation tubing.

Circulation will cease when the pump head pressure has been exceeded.

Check the High Temperature/Low Liquid Level Safety. If the FAULT light is on, make sure the fluid level in the bath is between the marks in the baffle and the HIGH TEMP/LOW LEVEL SAFETY setting is greater than the bath temperature. Turn the MAIN circuit breaker off and the back on and attempt to restart.

Service Assistance

If, after following these troubleshooting steps, your units fails to operate properly, contact our Service Department for assistance (see Preface, After-sale Support). Before calling, please obtain the following information:

BOM number
Serial number
Voltage of unit
Voltage of power source

Technical Support

Our Customer Service Department can provide you with a wiring diagram and a complete list of spare parts for your unit. Before calling, please obtain the following information:

BOM number
Serial number

WARRANTY

NESLAB Instruments, Inc. warrants for 12 months from date of shipment any NESLAB unit according to the following terms.

Any part of the unit manufactured or supplied by NESLAB and found in the reasonable judgment of NESLAB to be defective in material or workmanship will be repaired at an authorized NESLAB Repair Depot without charge for parts or labor. The unit, including any defective part must be returned to an authorized NESLAB Repair Depot within the warranty period. The expense of returning the unit to the authorized NESLAB Repair Depot for warranty service will be paid for by the buyer. NESLAB's responsibility in respect to warranty claims is limited to performing the required repairs or replacements, and no claim of breach of warranty shall be cause for cancellation or recision of the contract of sales of any unit. With respect to units that qualify for field service repairs, NESLAB's responsibility is limited to the component parts necessary for the repair and the labor that is required on site to perform the repair. Any travel labor or mileage charges are the financial responsibility of the buyer.

The buyer shall be responsible for any evaluation or warranty service call (including labor charges) if no defects are found with the NESLAB product.

This warranty does not cover any unit that has been subject to misuse, neglect, or accident. This warranty does not apply to any damage to the unit that is the result of improper installation or maintenance, or to any unit that has been operated or maintained in any way contrary to the operating or maintenance instructions specified in NESLAB's Instruction and Operation Manual. This warranty does not cover any unit that has been altered or modified so as to change its intended use.

In addition, this warranty does not extend to repairs made by the use of parts, accessories, or fluids which are either incompatible with the unit or adversely affect its operation, performance, or durability.

NESLAB reserves the right to change or improve the design of any unit without assuming any obligation to modify any unit previously manufactured.

THE FOREGOING EXPRESS WARRANTY IS IN LIEU OF ALL OTHER WARRANTIES, EXPRESSED OR IMPLIED, INCLUDING BUT NOT LIMITED TO WARRANTIES OR MERCHANTABILITY AND FITNESS FOR A PARTICULAR PURPOSE.

NESLAB'S OBLIGATION UNDER THIS WARRANTY IS STRICTLY AND EXCLUSIVELY LIMITED TO THE REPAIR OR REPLACEMENT OF DEFECTIVE COMPONENT PARTS AND NESLAB DOES NOT ASSUME OR AUTHORIZE ANYONE TO ASSUME FOR IT ANY OTHER OBLIGATION.

NESLAB ASSUMES NO RESPONSIBILITY FOR INCIDENTAL, CONSEQUENTIAL, OR OTHER DAMAGES INCLUDING, BUT NOT LIMITED TO LOSS OR DAMAGE TO PROPERTY, LOSS OF PROFITS OR REVENUE, LOSS OF THE UNIT, LOSS OF TIME, OR INCONVENIENCE.

This warranty applies to units sold in the United States. Any units sold elsewhere are warranted by the affiliated marketing company of NESLAB Instruments, Inc. This warranty and all matters arising pursuant to it shall be governed by the law of the State of New Hampshire, United States. All legal actions brought in relation hereto shall be filed in the appropriate state or federal courts in New Hampshire, unless waived by NESLAB.

GP Series
Constant Temperature
Bath and Circulator

NESLAB Manual P/N 000800
Rev . 07/16/97

Instruction and Operation Manual

GP-Series Constant Temperature Bath and Circulator Instruction and Operation Manual

Table of Contents

PREFACE

Compliance 2
Unpacking 2
Warranty 2
After-sale Support 2

SECTION I
Safety

Warnings 3

SECTION II
General Information

Description 4
Specifications 4

SECTION III
Installation

Site 6
Electrical Requirements 6
Plumbing Requirements 6
Fluids 7
Filling Requirements 7

SECTION IV
Controllers

Controllers 8
Analog 8
Digital 9
High Temperature/Low Liquid Level Safety 10
Tap Water Cooling Coil 11
Thermometer 11

SECTION V
Maintenance

Service Contracts 12
Cleaning 12
Algae 12

SECTION VI
Troubleshooting

Checklist 13
Service Assistance 13
Technical Support 13

SECTION VII
Warranty 14

Preface

Compliance

Products tested and found to be in compliance with the requirements defined in the EMC standards defined by 89/336/EEC as well as Low Voltage Directive (LVD) 73/23/EEC can be identified by the CE label on the rear of the unit. The testing has demonstrated compliance with the following directives:

LVD, 73/23/EEC	Complies with UL 3101-1:93
EMC, 89/336/EEC	EN 55011, Class A Verification EN 50082-1:1992 IEC 1000-4-2:1995 IEC 1000-4-3:1994 IEC 1000-4-4:1995

For any additional information refer to the Letter of Compliance that shipped with the unit (Declaration of Conformity).

Unpacking

Retain all cartons and packing material until the unit is operated and found to be in good condition.

If the unit shows external or internal damage, or does not operate properly, contact the transportation company and file a damage claim. Under ICC regulations, this is your responsibility.

Warranty

The unit has a warranty against defective parts and workmanship is for one full year from date of shipment. See back page for more details.

After-sale Support

NESLAB is committed to customer service both during and after the sale. If you have questions concerning the operation of your unit, contact our Sales Department. If your unit fails to operate properly, or if you have questions concerning spare parts or Service Contracts, contact our Customer Service Department. Before calling, please obtain the following information from the unit's serial number label:

- *BOM number* _____

- *Serial number* _____

Section I Safety

Warnings

Make sure you read and understand all instructions and safety precautions listed in this manual before installing or operating your unit. If you have any questions concerning the operation of your unit or the information in this manual, contact our Sales Department. Addresses and phone numbers for all our NESLAB Sales and Service Centers are printed on the back cover of this manual.

Performance of installation, operation, or maintenance procedures other than those described in this manual may result in a hazardous situation and may void the manufacturer's warranty.

Observe all warning labels.

Never remove warning labels.

Never operate damaged or leaking equipment.

Never use flammable or corrosive fluids with this unit.

Never operate the unit without bath fluid in the bath.

Always turn off the unit and disconnect the line cord from the power source before performing any service or maintenance procedures, or before moving the unit.

Always empty the bath before moving the unit.

Never operate equipment with damaged line cords.

Refer service and repairs to a qualified technician.

In addition to the warnings listed above, warnings are posted throughout the manual. These warnings are designated by an exclamation mark inside an equilateral triangle with text highlighted in bold print. Read and follow these important instructions. Failure to observe these instructions can result in permanent damage to the unit, significant property damage, or personal injury, or death.

Section II General Information

Description

The GP-Series Constant Temperature Baths are designed to provide temperature control for applications requiring a fluid work area or pumping to an external system.

The units consist of a heater, stirrer or optional circulation pump, stainless steel bath, and temperature controller.

Specifications

	GP Series
Temperature Range	
Analog Controller	ambient to +150°C
Digital Controller	ambient to +150°C
Temperature Stability[1]	±0.03°C
Pump Capacity[1,2]	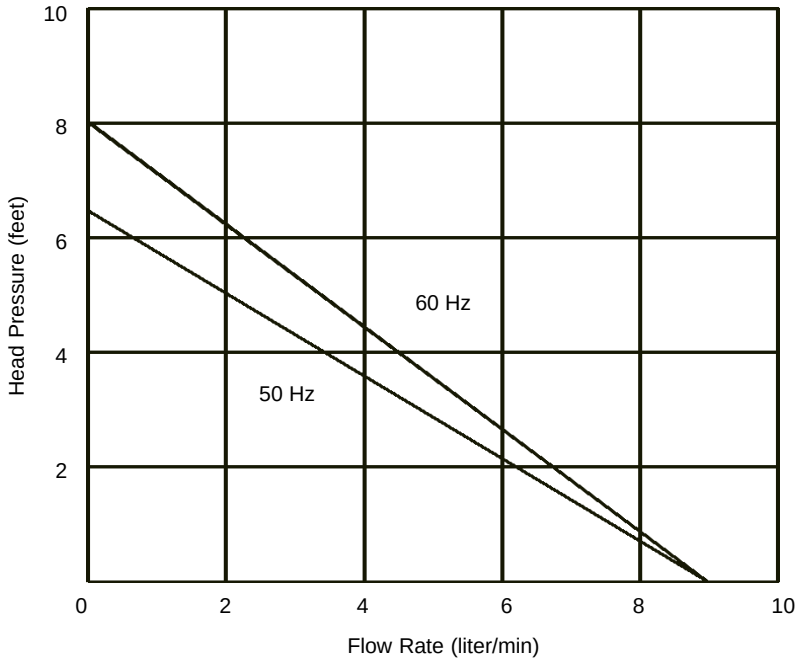

1. Specifications listed for units operating at +37°C bath temperature, +21°C (+70°F) ambient, with tap water as bath fluid.
2. The circulation pump is an optional feature. It is factory installed and must be specified at the time of order.

	GP-100	GP-200	GP-300
Heater			
Watts	1200		
Bath Work Area			
(L x W x D)			
Inches	12.7 x 15.2 x 14.6	10 x 10 3/8 x 5 ¾	10 x 10 3/8 x 8 ½
Centimeters	5 x 6 x 5 ¾	25.4 x 26.4 x 14.6	25.4 x 26.4 x 21.6
Bath Volume			
Gallons	1.3	3.2	5.25
Liters	5.0	12.0	20.0
Unit Dimensions			
(H x W x D)			
Inches	13 ¼ x 8 ¾ x 13	13 ¼ x 12 ½ x 18 ½	16 5/8 x 12 ½ x 18 ½
Centimeters	33.7 x 22.2 x 33.0	33.7 x 31.7 x 47.0	41.9 x 31.7 x 47.0
Power Requirements			
Volts	115	or	220/240
Hz	60		50
Amps	12		7
Shipping Weight			
Pounds	33	49	54
Kilograms	15	23	25

	GP-400	GP-500
Heater		
Watts	1200	
Bath Work Area		
(L x W x D)		
Inches	20 x 10 3/8 x 5 ¾	17 x 10 3/8 x 11½
Centimeters	50.8 x 26.4 x 14.6	43.2 x 26.4 x 29.2
Bath Volume		
Gallons	5.5	11
Liters	21	42
Unit Dimensions		
(H x W x D)		
Inches	13 ¼ x 12 ½ x 28 ¼	19 ½ x 12 ½ x 25 ½
Centimeters	33.7 x 31.7 x 71.8	49.5 x 31.7 x 64.8
Power Requirements		
Volts	115	220/240
Hz	60 or	50
Amps	12	7
Shipping Weight		
Pounds	65	130
Kilograms	30	60

Section III Installation

Site

The unit should be located on a sturdy table or bench top. Ambient temperatures should be inside the range of +50°F to +90°F (+10°C to +32°C).



Never place the unit in a location where excessive heat, moisture, or corrosive materials are present.

A minimum clearance of 6 inches (15 centimeters) between the rear of the unit and the nearest wall is required for adequate ventilation through the pump box. This space will also accommodate the pump connections, the tap water cooling coil connections.

Excessively dusty areas should be avoided and a periodic cleaning schedule should be instituted (see Section VI, Cleaning).

Electrical Requirements

Refer to the serial number label on the rear of the unit to identify the specific electrical requirements of your unit.

Ensure the voltage of the power source meets the specified voltage, ±10%.

The unit construction provides extra protection against the risk of electric shock by grounding appropriate metal parts. The extra protection may not function unless the power cord is connected to a properly grounded outlet. It is your responsibility to assure that a proper ground connection is provided.

Plumbing Requirements

Hose Connections (if equipped with circulation pump)
The pump connections are located at the rear of the pump box and are labelled. These connections are stainless steel serrated hose connections that accept $^{3}/_{8}$ inch ID flexible tubing.

Flexible tubing, if used, should be of heavy wall or reinforced construction. Make sure all tubing connections are securely clamped. Avoid running tubing near radiators, hot water pipes, etc. If substantial lengths of tubing are necessary, insulation may be required for improved temperature control.

Please consider hard plumbing circulation lines when excessively high fluid temperatures are required.

Tubing and insulation are available from NESLAB. Contact our Sales Department for more information (see Preface, After-sale Support).

Pumping (if equipped)
The pump is designed to deliver a flow of 9 liters/minute (2.3 gallons/ minute) at 0 feet of head. To prevent unwanted flow, the bath is supplied with two stainless steel disks which block the PUMP INLET and PUMP OUTLET.

The disks must be removed when flow is required. To prevent leaking around the inlet and outlet connections, be sure the two Teflon® O-rings remain in place. To prevent distortion of the O-rings, only tighten the connections "hand tight." Once the hose connections are made, the pump must be properly plumbed to an external system. It is important the bath is not in operation when all plumbing work is done.

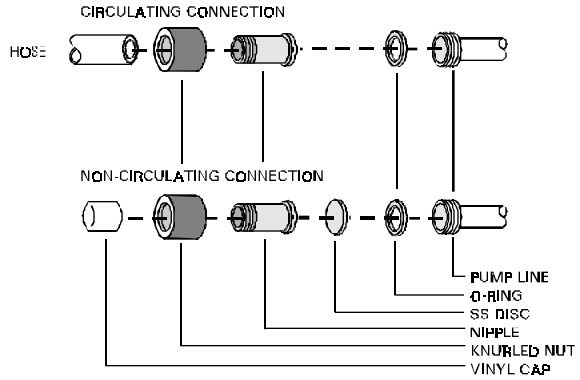

It is important to keep the distance between the unit and the external system as short as possible, and to use the largest diameter tubing practical. Tubing should be straight and without bends. If diameter reductions must be made, make them at the inlet and outlet of the external system, not at the unit.

If the bath is not used for external circulation, make sure the stainless steel disks are in place prior to operating the bath.

Fluids

Tap water is the recommended fluid for operation from ambient to +80°C.

Above +80°C, the user is responsible for fluids used.

Never use flammable or corrosive fluids with this unit.

Filling Requirements

The bath work area has a high and low level marker to guide filling. The markers are 1 inch horizontal slits located in the center of the stainless steel baffle that separates the work area and the pump assembly. The correct fluid level falls between these two markers. If the correct fluid level is not maintained, the heater will be exposed and may become damaged.

When pumping to an external system, keep extra fluid on hand to maintain the proper level as the circulating lines and external system are filled.

Never run the unit when the work area is empty.

Section IV Controllers

Controllers

Two temperature controllers are available with GP-Series baths: Analog and Digital. This section explain the installation and operation of the controllers.

Analog

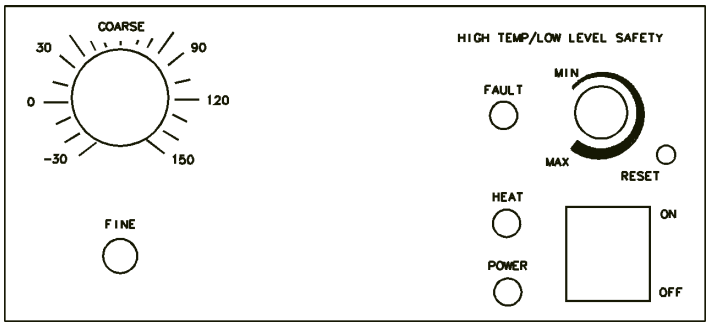

Analog Temperature Controller (Front View)

Start Up

Before starting the unit, double check all electrical and plumbing connections and make sure the work area has been properly filled with bath fluid.

To start the unit, press the ON/OFF button. The pump will start and the ON lamp will light.

Temperature Adjustment

To adjust the bath temperature, turn the calibrated COARSE dial and position the reference line as close to the temperature setpoint as possible. Use the FINE dial and the bath thermometer to make fine adjustments to the bath temperature.

The HEAT lamp indicates the status of the heater. As the temperature of the fluid in the bath approaches the temperature setpoint, the lamp will cycle on and off to indicate the approximate duty cycle of the heater.

Digital

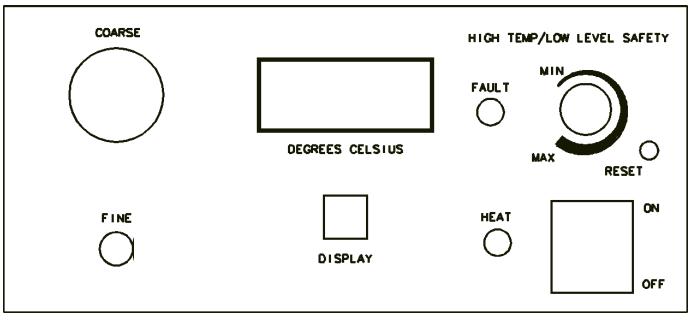

Start Up

Before starting the unit, double check all electrical and plumbing connections and make sure the work area has been properly filled with bath fluid.

To start the unit, press the ON/OFF switch. The pump will start and the display will indicate the temperature of the fluid in the bath.

Temperature Adjustment

To display the temperature setpoint, press the DISPLAY button. To adjust the setpoint, press the DISPLAY button and turn the COARSE and FINE dials until the temperature setpoint is indicated on the LED display.

NOTE: Inadvertent movement of the COARSE and/or FINE dials, regardless of the position of the DISPLAY button, will result in a change in the setpoint. This change will not be immediately reflected on the LED display, unless the DISPLAY button is pressed. The display will eventually change as the unit responds to the new setpoint

The HEAT LAMP indicates the status of the heater. As the temperature of the fluid in the bath approaches the temperature setpoint, the LAMP will cycle on and off to indicate the approximate duty cycle of the heater.

High Temperature/ Low Liquid Level Safety

The unit is equipped with an adjustable High Temperature/Low Liquid Level Safety (HIGH TEMP/LOW LEVEL). The safety prevents the heater from reaching excessively high temperatures that can cause serious damage to the unit. A single temperature sensor, located on the heater coils in the bath, is used to monitor both conditions. A High Temperature/Low Liquid Level fault occurs when the temperature of the sensor exceeds the set temperature limit. In the event of a fault, the unit will shut down. The cause of the fault must be identified and corrected before the unit can be restarted.

The safety is not pre-set and must be adjusted during initial installation.

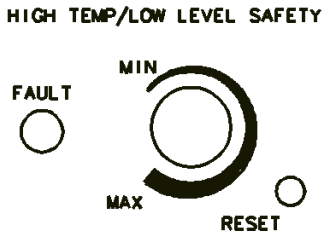

To set the safety, locate the adjustment dial on the front of the control box. It is labelled HIGH TEMP/LOW LEVEL SAFETY. Turn the dial fully clockwise and press the RESET button. **NOTE:** On units without a reset button turn the ON/OFF switch off and then back on.

Start the unit. Adjust the temperature setpoint for a few degrees higher than the highest desired operating temperature and allow the bath to stabilize at the setpoint. Turn the HIGH TEMP/LOW LEVEL SAFETY dial counter-clockwise until you hear a click and the unit shuts down. The red FAULT lamp on the front of the pump box will light to indicate a fault has occurred.

The safety is now set. Allow the fluid to cool below the cutout temperature and then, without moving the adjustment dial, press the RESET button or turn the ON/OFF switch off and then back on.

If a fault occurs, the RESET button must be pressed or the ON/OFF swiitch turned off and then back on before the unit will start.

NOTE: The minimum high temperature safety setting is 50°C.

Tap Water Cooling Coil

The unit is equipped with a cooling coil located in the bath. The work area can be cooled and temperature stability improved by circulating cold fluid through the coil. For best results, the fluid should be 5°C or more below the temperature setpoint. The required flow rate of the fluid depends on the type of fluid and the setpoint.

The plumbing connections for the cooling coil are 3/8 inch OD stainless steel tubes located at the rear of the pump box. These connections will accept 3/8 or 5/16 inch ID flexible tubing. A 3/8 inch ID is the minimum recommended tubing diameter. Tubing is available from NESLAB. Contact our Sales Department for more information (see Preface, After-sale Support).

Connect one COOLING COIL tube to the cold fluid source. Connect the other COOLING COIL tube to the cold fluid return (or drain, if tap water is being used).

Thermometer

Units with an Analog temperature controller will accept a glass tube thermometer. Insert the thermometer in the grommet located on the left side of the work area.

Section V Maintenance

Service Contracts

NESLAB offers on-site Service Contracts that are designed to provide extended life and minimal down-time for your unit. For more information, contact our Customer Service Department (see Preface, After-sale Support).

Cleaning

Periodically clean the case and stainless steel bath using a mild soapy solution. **Do not use steel wool; its abrasiveness will lead to rusting.** Dry the bath using a soft cloth.

Algae

To restrict the growth of algae in the bath, it is recommended that the bath cover be kept in place and that all circulation lines be opaque. This will minimize the entrance of light which is required for the growth of most common algae.

NESLAB recommends the use of Chloramine-T, one gram per gallon.

Section VI Troubleshooting

Checklist

Unit will not start

Ensure the voltage of the power source meets the specified voltage ±10%. Refer to the serial number label on the rear of the unit to identify the specific electrical requirements of your unit.

Check the High Temperature/Low Liquid Level Safety. If the FAULT light is on, make sure the fluid level in the bath is between the marks in the baffle and the HIGH TEMP/LOW LEVEL SAFETY setting is greater than the bath temperature. Push the RESET button or, for units without a reset button, turn the ON/OFF switch off and then back on and attempt to restart.

No external circulation

Make sure the stainless steel disks on the PUMP INLET and PUMP OUTLET have been removed.

Check for obstructions, kinks, or leaks in the circulation tubing.

Circulation will cease when the pump head pressure has been exceeded.

Check the High Temperature/Low Liquid Level Safety. If the FAULT light is on, make sure the fluid level in the bath is between the marks in the baffle and the HIGH TEMP/LOW LEVEL SAFETY setting is greater than the bath temperature. Push the RESET button or, for units without a reset button, turn the ON/OFF switch off and then back on and attempt to restart.

Service Assistance

If, after following these troubleshooting steps, your units fails to operate properly, contact our Service Department for assistance (see Preface, After-sale Support). Before calling, please obtain the following information:

BOM number
Serial number
Voltage of unit
Voltage of power source

Technical Support

Our Customer Service Department can provide you with a wiring diagram and a complete list of spare parts for your unit. Before calling, please obtain the following information:

BOM number
Serial number

WARRANTY

NESLAB Instruments, Inc. warrants for 12 months from date of shipment any NESLAB unit according to the following terms.

Any part of the unit manufactured or supplied by NESLAB and found in the reasonable judgment of NESLAB to be defective in material or workmanship will be repaired at an authorized NESLAB Repair Depot without charge for parts or labor. The unit, including any defective part must be returned to an authorized NESLAB Repair Depot within the warranty period. The expense of returning the unit to the authorized NESLAB Repair Depot for warranty service will be paid for by the buyer. NESLAB's responsibility in respect to warranty claims is limited to performing the required repairs or replacements, and no claim of breach of warranty shall be cause for cancellation or recision of the contract of sales of any unit.With respect to units that qualify for field service repairs, NESLAB's responsibility is limited to the component parts necessary for the repair and the labor that is required on site to perform the repair. Any travel labor or mileage charges are the financial responsibility of the buyer.

The buyer shall be responsible for any evaluation or warranty service call (including labor charges) if no defects are found with the NESLAB product.

This warranty does not cover any unit that has been subject to misuse, neglect, or accident. This warranty does not apply to any damage to the unit that is the result of improper installation or maintenance, or to any unit that has been operated or maintained in any way contrary to the operating or maintenance instructions specified in NESLAB's Instruction and Operation Manual. This warranty does not cover any unit that has been altered or modified so as to change its intended use.

In addition, this warranty does not extend to repairs made by the use of parts, accessories, or fluids which are either incompatible with the unit or adversely affect its operation, performance, or durability.

NESLAB reserves the right to change or improve the design of any unit without assuming any obligation to modify any unit previously manufactured.

THE FOREGOING EXPRESS WARRANTY IS IN LIEU OF ALL OTHER WARRANTIES, EXPRESSED OR IMPLIED, INCLUDING BUT NOT LIMITED TO WARRANTIES OR MERCHANTABILITY AND FITNESS FOR A PARTICULAR PURPOSE.

NESLAB'S OBLIGATION UNDER THIS WARRANTY IS STRICTLY AND EXCLUSIVELY LIMITED TO THE REPAIR OR REPLACEMENT OF DEFECTIVE COMPONENT PARTS AND NESLAB DOES NOT ASSUME OR AUTHORIZE ANYONE TO ASSUME FOR IT ANY OTHER OBLIGATION.

NESLAB ASSUMES NO RESPONSIBILITY FOR INCIDENTAL, CONSEQUENTIAL, OR OTHER DAMAGES INCLUDING, BUT NOT LIMITED TO LOSS OR DAMAGE TO PROPERTY, LOSS OF PROFITS OR REVENUE, LOSS OF THE UNIT, LOSS OF TIME, OR INCONVENIENCE.

This warranty applies to units sold in the United States. Any units sold elsewhere are warranted by the affiliated marketing company of NESLAB Instruments, Inc. This warranty and all matters arising pursuant to it shall be governed by the law of the State of New Hampshire, United States. All legal actions brought in relation hereto shall be filed in the appropriate state or federal courts in New Hampshire, unless waived by NESLAB.

HTC-1200
Recirculating Heater

NESLAB Manual P/N 013966
Rev. 04/22/98

Operation and Maintenance Manual

HTC-1200 Recirculating Heater
Operation and Maintenance Manual

Table of Contents

PREFACE

Compliance 2
Unpacking 2
Warranty 2
After-sale Support 2

SECTION I
Safety

Warnings 3

SECTION II
General Information

Description 4
Specifications 4

SECTION III
Installation

Site 5
Electrical Requirements 5
Plumbing Requirements 5
Fluids 6
Filling Requirements 6
Auto Refill (Optional) 6
Water Quality Recommendations 7

SECTION IV
Operation

Start Up 8
Temperature Adjustment 8
Fault Interlock Contact 8
Low Fluid Level Monitor 9
High Temperature Monitor 9
Flow Control 9

SECTION V
Maintenance

Service Contracts 10
Pressure Relief Valve 10
Cleaning 10
Algae 10

SECTION VII
Service

Configuration 11
Pump Strainer 11
Pump Motor Lubrication 12

SECTION VIII
Warranty 13

Preface

Compliance

Products tested and found to be in compliance with the requirements defined in the EMC standards defined by 89/336/EEC as well as Low Voltage Directive (LVD) 73/23/EEC can be identified by the CE label on the rear of the unit. The testing has demonstrated compliance with the following directives:

LVD, 73/23/EEC	Complies with UL 3101-1:93
EMC, 89/336/EEC	EN 55011, Class A Verification EN 50082-1:1992 IEC 1000-4-2:1995 IEC 1000-4-3:1994 IEC 1000-4-4:1995

For any additional information refer to the Letter of Compliance that shipped with the unit (Declaration of Conformity).

Unpacking

Retain all cartons and packing material until the unit is operated and found to be in good condition. If the unit shows external or internal damage, or does not operate properly, contact the transportation company and file a damage claim. Under ICC regulations, this is your responsibility.

Warranty

Units have a one year warranty against defective parts and workmanship starting from the date of shipment. See back page for more details.

After-sale Support

NESLAB is committed to customer service both during and after the sale. If you have questions concerning the operation of your unit, contact our Sales Department. If your unit fails to operate properly, or if you have questions concerning spare parts or Service Contracts, contact our Service Department. Before calling, please copy the following information off the serial tag on the rear of the unit.

Unit Serial Number _____

Unit BOM Number _____

Section I Safety

Warnings

Make sure you read and understand all instructions and safety precautions listed in this manual before installing or operating your unit. If you have any questions concerning the operation of your unit or the information in this manual, contact our Sales Department (see After-sale Support).

Performance of installation, operation, or maintenance procedures other than those described in this manual may result in hazardous situations and may void the manufacturer's warranty

Observe all warning labels.

Never remove warning labels.

Never operate damaged or leaking equipment.

Never operate the unit without fluid in the reservoir.

Always turn off the unit and disconnect the line cord from the power source before performing any service or maintenance procedures, or before moving the unit.

Always empty the reservoir before moving the unit.

Always turn off the unit and disconnect the line cord from the power source before moving the unit.

Never operate equipment with damaged line cords.

Refer service and repairs to a qualified technician.

In addition to the safety warnings listed above, warnings are posted throughout the manual. The warnings are designated by an exclamation point inside an equilateral triangle with text highlighted in bold print. Read and follow these important instructions. Failure to observe these instructions can result in permanent damage to the unit, significant property damage, or personal injury or death.

Section II General Information

Description

The HTC-1200 Recirculating Heater is designed to provide a continuous flow of heated fluid at a constant flow rate and temperature.

The unit consists of a stainless steel reservoir, a pump, a heater with a high temperature limit device, and a digital temperature controller.

Specifications

Temperature Range[1,2]	Ambient to +90°C
Pumping Capacity[3]	3 gpm, 60 psi
Unit Dimensions[4] (H x W x D) *Inches* *Centimeters*	 19 x 23 1/8 x 18 5/8 48.3 x 58.7 x 47.3
Reservoir Volume *Gallons* *Liters*	 5.5 20.8
Weight *Pounds* *Kilograms*	 85 38.5

1. High temperature ranges are available up to +130°C. Contact us for details.
2. Using water as recirculating fluid, 60°C setpoint, 21°C ambient. Specification will be affected by temperature, ambient or fluid.
3. PD-2 pump, 60Hz unit. 2.5 gpm, 60 psi for 50Hz units. Optional pumps are available.
4. For units with other than PD-2 pumps, dimensions are 35¾" x 23¼" x 18¾" (H x W xD).

Section III Installation

Site

The unit should be located in a laboratory or clean industrial environment where ambient temperatures are inside the range of +55°F to +95°F (+13°C to +35°C).



Never place the unit in a location where excessive heat, moisture, or corrosive materials are present.

Electrical Requirements



The unit construction provides extra protection against the risk of electrical shock by grounding appropriate metal parts. The extra protection may not function unless the power cord is connected to a properly grounded outlet. It is your responsibility to assure a proper ground protection is provided.

Refer to the serial number on the rear of the unit for the specific electrical requirements of your unit.

Ensure the voltage of the power source meets the specified voltage, ±10%.

Plumbing Requirements

Before installing the unit to an instrument that previously used tap water as a circulating fluid, flush the instrument several times to remove any rust or scale that has built up. The manufacturer of the instrument should be able to recommend a cleaning fluid for their equipment.

The plumbing connections are located on the right side of the unit and are labelled SUPPLY and RETURN. These connections are ½ inch MPT.

Connect the SUPPLY fitting to the inlet of the instrument being heated. Connect the RETURN fitting to the outlet of the instrument being heated.

Flexible tubing, if used, should be of heavy wall or reinforced construction. All tubing should be rate to withstand 80 psi at at the highest operating temperature. Make sure all tubing connections are securely clamped. Avoid running tubing near radiators, hot water pipes, etc. If substantial lengths of tubing are necessary, insulation may be required to prevent heat loss.

Tubing and insulation are available from NESLAB. Contact our Sales Department for more information (see Preface, After-sale Support).

It is important to keep the distance between the unit and the instrument being heated as short as possible, and to use the largest diameter tubing practical. Tubing should be straight and without bends. If diameter reductions

must be made, they should be made at the inlet and outlet of the instrument being heated, not at the unit.

If substantial lengths of lines are required, they should be pre-filled with circulating fluid before connecting them to the unit.

Fluids

The selected circulating fluid must have a viscosity of 50 centistokes or less at the lowest operating temperature.



Never use flammable or corrosive fluids with this unit.



Do not use automobile anti-freeze. Commercial anti-freeze contains silicates that can damage the pump seals. Use of automobile anti-freeze will void the manufacturer's warranty.

Filtered tap water is the recommended fluid for operation from +8°C to +80°C. See Water Quality Recommendations on the next page.

Above +80°C, you are responsible for fluids used.

Filling Requirements

The reservoir access panel is located at the left rear of the top cover. To remove the access panel, slide the latch back (towards the rear of the unit) and lift.

The reservoir cover is located below the access panel. Loosen the thumb screws and remove the reservoir cover.

Fill the reservoir with cooling fluid to within 1 inch of the top.

Keep extra fluid on hand until the entire system (HTC-1200, the instrument being heated and the tubing that connects them) is filled.

Replace the reservoir cover and the access panel.

Auto Refill (Optional)

Auto refill maintains the correct fluid level in the reservoir. The device consists of a reservoir float switch, a solenoid valve and a plumbing connection.

The plumbing connection is labelled AUTO REFILL. The connection is a $^{3}/_{8}$ inch OD barbed fitting. Connect this fitting to a make-up fluid source.

Make sure all connections are securely clamped.

Water Quality Recommendations

Unfavorably high total ionized solids (TIS) can accelerate the rate of galvanic corrosion. These contaminants can function as electrolytes which increase the potential for galvanic cell corrosion and lead to localized corrosion such as pitting which can be observed at the studs and on the outside surface of cooling coils. Eventually, the pitting will become so extensive that the coil will leak refrigerant into the water reservoir.

As an example, raw water in the United States averages 171 ppm (as NaCl). The recommended level for use in a water system is between 0.5 to 5.0 ppm (as NaCl).

Recommendation: Initially fill the tank with distilled/deionized water. Do not use untreated tap water as the total ionized solids level may be too high.

Maintain this water quality at a resistivity of between 1 to 10 megohm-cm (compensated at 25°C) by using a purification system. Although the initial fill may be as high as 10 megohm-cm (compensated at 25°C), the desired level for long time usage is 1 to 3 megohm-cm (compensated at 25°C).

The above two recommendations will reduce the electrolytic potential of the water and prevent or reduce the galvanic corrosion observed.

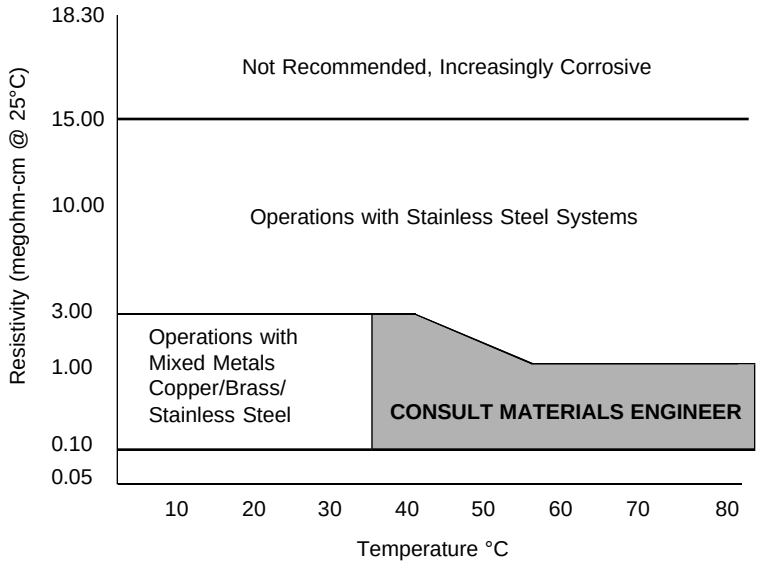

Water Quality Considerations

Section IV Operation

Start Up

Before starting the unit, double check all electrical and plumbing connections and make sure the circulating system (the HTC-1200, the instrument being heated, and the tubing that connects them) has been properly filled with circulating fluid.

To start the unit, place the POWER ON/OFF switch in the ON position and momentarily press the START switch upward. The circulation pump will start and the TEMPERATURE LED will indicate the fluid temperature.

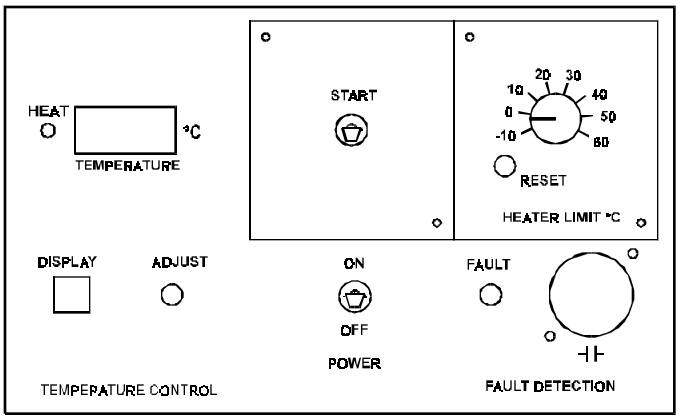

Digital Temperature Controller

Temperature Adjustment

To display the temperature setpoint, press and hold the DISPLAY button. To adjust the temperature setpoint, press and hold the DISPLAY button and turn the ADJUST dial until the desired temperature setpoint is indicated on the TEMPERATURE LED display.

NOTE: Inadvertent movement of the ADJUST dial, regardless of the position of the DISPLAY button, will result in a change in the setpoint. This change will not be immediately reflected on the digital display, unless the DISPLAY button is pressed. The display will eventually change as the unit responds to the new setpoint.

The HEAT LED on the front of the control box indicate the status of the heater. The LED indicates power is supplied to the heater.

Fault Interlock Contact

A set of contacts are connected to a receptacle on the front of the control box. The contacts are rated 15A, 125V. This is not a power inlet or outlet. The receptacle is isolated from the circuitry. Its ground pin is connected to the chassis. The contacts are closed during normal operation and open when the unit is turned off or when a fault occurs.

Low Fluid Level Monitor

The low fluid level monitor is connected to a float switch in the reservoir. A low liquid level fault occurs when the fluid in the reservoir drops below the operating level.

In the event of a low fluid fault, the unit will shut down immediately and the FAULT LED will light. The fault must be identified and corrected before the unit can be restarted.

High Temperature Monitor

The high temperature monitor is connected to a sensor that monitors the fluid temperature as it exits the heat exchanger. The monitor protects the system from exposure to excessively hot fluid. A temperature fault occurs when the circulating fluid temperature exceeds the set temperature limit.

In the event of a high temperature fault, the unit will shut down immediately and the FAULT LED will light. The fault must be identified and corrected before the unit can be restarted.

NOTE: Another adjustable heater limit is located under the bonnet. To set the limit, first turn the dial fully clockwise and press the red RESET button. On units without a reset button recycle the POWER switch OFF then back ON. Next, turn the dial on the front of the control box until the reference line points to the desired temperature. The temperatures surrounding the adjustment dial are in degrees Celsius

Flow Control

The flow control handle is connected to a valve that controls the flow of fluid to the instrument being heated. The handle is located on the right side of the unit, next to the plumbing connections.

When the handle is turned fully counterclockwise, the valve is open and all fluid is supplied to the instrument being heated. When the handle is turned fully clockwise, the valve is closed and no fluid is supplied to the instrument being heated. When the handle is between these two positions, the flow rate of the fluid is between full flow and no flow. Use a flow meter on the SUPPLY line to adjust the desired flow rate.

Make sure the flow control valve is closed position before starting the unit. Once the unit is running, use the handle to slowly open the valve until the desired flow rate is adjusted. Never start the unit with the valve in the open position and never “crank” the valve wide open from the closed position.

Section V Maintenance

Service Contracts

NESLAB offers on-site Service Contracts that are designed to provide extended life and minimal down-time for your unit. For more information, contact our Customer Service Department (see Preface, After-sale Support).

Pressure Relief Valve

On units with PD-2 pumps an adjustable pressure relief valve establishes the maximum operating pressure of the unit. If the pressure of the fluid leaving the pump exceeds the valve setting, the relief valve will bypass the fluid within the unit to relieve the pressure. The relief valve does not determine the actual operating pressure; the operating pressure of the system is determined by the back pressure of the connected equipment and the setting of the flow control.

If adjustment is necessary, consult our Service Department for assistance.

For applications requiring a maximum pressure less than 55 psi, an External Pressure Reducer (EPR) is available. An EPR allows an adjustable operating pressure of 10 to 50 psi. Contact our Sales Department for more information (see Preface, After-sale Support). Before calling, please obtain the following information:

BOM number
Serial number

Cleaning

Periodically inspect the reservoir. If cleaning is necessary, flush the reservoir with a cleaning fluid compatible with the circulating system and the fluid.

Algae

To restrict the growth of algae in the reservoir, we recommend the reservoir cover be kept in place and that all circulation lines be opaque. This will eliminate the entrance of light which is required for the growth of most common algae.

NESLAB recommends the use of Chloramine-T, 1 gram per 3.5 liters.

Section VI Service

For personal safety and equipment reliability, the following procedure should only be performed by a qualified technician. Contact our Service Department for assistance (see Preface, After-sale Support).

Configuration

The unit has a hinged top cover to allow service access. The top cover is secured to the unit base by a hinge between the top cover and base (along the rear of the unit), and by two spring clips located at the front corners. To gain access to the pump or the reservoir area, lift the top cover and tilt it back. A support brace, located on the right side of the inner base, will stop and support the top cover.

Pump Strainer

If debris is in the system, the strainer will prevent the material from being drawn into the pump and damaging the pump vanes.

After initial installation, the strainer will most probably become clogged with debris and scale within the first week. Therefore, the strainer must be cleaned after the first week of installation. After this first cleaning, a monthly visual inspection is recommended. After several months, the frequency of cleaning will be established.

Before cleaning the strainer, disconnect the line cord from the power source and drain the reservoir.

PD-2 Pumps

PD-2 pumps have a wire mesh screen (under hex nut) located in the pump suction line.

Remove the right side access panel. Unscrew the hex nut on the strainer and remove the screen. Clean the screen by rinsing it with water.

When the screen is clean, replace it in the strainer, tighten the hex nut and replace the panel. Refer to Section III, Filling Requirements for instructions on replacing the circulating fluid.

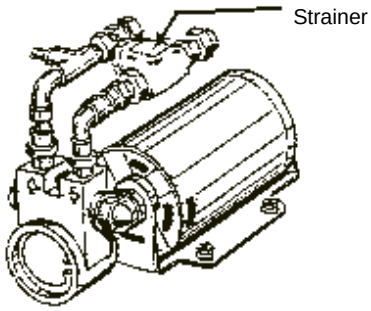

TU Pumps

TU pumps have a wire mesh screen located in the reservoir.

Open the bonnet and remove the access panel located on top of the reservoir cover.

Cover the strainer with a plastic bag to help catch any debris which may become free.

Unscrew the strainer, rinse it with water. Replace the strainer. Refer to Section III, Filling Requirements for instructions on replacing the fluid.

Pump Motor Lubrication

PD recirculating pumps require motor lubrication. Motors used to drive the pump are manufactured by several companies. These motors use sleeve type bearings with large oil reservoirs. Oiling instructions are generally posted on each motor. In the absence of legible lubrication instructions, add approximately 30 to 35 drops of SAE 20 non-detergent oil to each bearing on the following schedule (SAE 20 = 142 CS viscosity):

Duty Cycle	Oiling Frequency
Continuous	Each year
Intermittent	Each 2 years
Occasional	Each 5 years

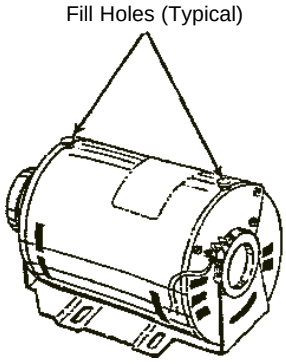

WARRANTY

NESLAB Instruments, Inc. warrants for 12 months from date of shipment any NESLAB unit according to the following terms.

Any part of the unit manufactured or supplied by NESLAB and found in the reasonable judgment of NESLAB to be defective in material or workmanship will be repaired at an authorized NESLAB Repair Depot without charge for parts or labor. The unit, including any defective part must be returned to an authorized NESLAB Repair Depot within the warranty period. The expense of returning the unit to the authorized NESLAB Repair Depot for warranty service will be paid for by the buyer. NESLAB's responsibility in respect to warranty claims is limited to performing the required repairs or replacements, and no claim of breach of warranty shall be cause for cancellation or recision of the contract of sales of any unit.

With respect to units that qualify for field service repairs, NESLAB's responsibility is limited to the component parts necessary for the repair and the labor that is required on site to perform the repair. Any travel labor or mileage charges are the financial responsibility of the buyer.

The buyer shall be responsible for any evaluation or warranty service call (including labor charges) if no defects are found with the NESLAB product.

This warranty does not cover any unit that has been subject to misuse, neglect, or accident. This warranty does not apply to any damage to the unit that is the result of improper installation or maintenance, or to any unit that has been operated or maintained in any way contrary to the operating or maintenance instructions specified in NESLAB's Instruction and Operation Manual. This warranty does not cover any unit that has been altered or modified so as to change its intended use.

In addition, this warranty does not extend to repairs made by the use of parts, accessories, or fluids which are either incompatible with the unit or adversely affect its operation, performance, or durability.

NESLAB reserves the right to change or improve the design of any unit without assuming any obligation to modify any unit previously manufactured.

THE FOREGOING EXPRESS WARRANTY IS IN LIEU OF ALL OTHER WARRANTIES, EXPRESSED OR IMPLIED, INCLUDING BUT NOT LIMITED TO WARRANTIES OR MERCHANTABILITY AND FITNESS FOR A PARTICULAR PURPOSE.

NESLAB'S OBLIGATION UNDER THIS WARRANTY IS STRICTLY AND EXCLUSIVELY LIMITED TO THE REPAIR OR REPLACEMENT OF DEFECTIVE COMPONENT PARTS AND NESLAB DOES NOT ASSUME OR AUTHORIZE ANYONE TO ASSUME FOR IT ANY OTHER OBLIGATION.

NESLAB ASSUMES NO RESPONSIBILITY FOR INCIDENTAL, CONSEQUENTIAL, OR OTHER DAMAGES INCLUDING, BUT NOT LIMITED TO LOSS OR DAMAGE TO PROPERTY, LOSS OF PROFITS OR REVENUE, LOSS OF THE UNIT, LOSS OF TIME, OR INCONVENIENCE.

This warranty applies to units sold in the United States. Any units sold elsewhere are warranted by the affiliated marketing company of NESLAB Instruments, Inc. This warranty and all matters arising pursuant to it shall be governed by the law of the State of New Hampshire, United States. All legal actions brought in relation hereto shall be filed in the appropriate state or federal courts in New Hampshire, unless waived by NESLAB.

HTD-I Water-Cooled Galden® Chiller

NESLAB Manual P/N 000806
Rev. 09/09/97

Instruction and Operation Manual

HTD-I Water-Cooled Galden® Chiller

PREFACE

Compliance 4
Unpacking 4
Shipping List 4
After-sale Support 4

SECTION I
Safety

Warnings 5
Material Data Safety Sheets 5

SECTION II
General Information

Description 6
Specifications 6

SECTION III
Installation

Site 8
Electrical Requirements 8
Plumbing Requirements 9
Fluids 10
Filling Requirements 10

SECTION IV
Operation

Start Up 11
Front Panel Controls 12
Front Panel Gauges 13
Rear Panel Controls 13
Control Display 14
Indicator Lamps 15
Failure and Warning Condition Table 18
Changing a Value 20
Controller Displays 20
Error Messages 27

SECTION V
Special Features

Heater Package 30
Pump Motor Overload Protector 30
Compressor Motor Overload Protector 30
Pressure Relief Valve 31
High Pressure Cutout 31
Low Pressure Cutout 32
High Temperature Cutouts 32
Cabinet High Temperature Cutout 32
Electrical Interlocks 32
Tank Relief Valves 32

High Injector Temperature 33
Phase Voltage Monitor 33
Temperature Control 33
Flow Monitors 33
Low Level Monitors 33
Temperature Sensor 33
Accessory Connections 34

SECTION VI
Maintenance

Service Contracts 35
Draining 35
Reservoir Cleaning 36
Filter Cartridge Cleaning 36
Preventive Maintenance 37

SECTION VII
Troubleshooting

Troubleshooting 38

SECTION VIII
Spare Parts List

Critical Spare Parts List 39
Common Spare Parts List 40

SECTION IX
Diagrams

Flow Diagram 41
Wiring Diagrams 42

HDT-I Quick Reference Guide

Description
The HTD-I Water-Cooled Chiller is designed to provide a continuous flow of Galden® heat transfer fluid at a constant temperature and flow rate. The unit consists of 2 water-cooled refrigeration systems each with a fluid reservoir, fluid recirculation pump and a microprocessor temperature controller. A 5 kilowatt heater is located in each fluid reservoir.

Specifications

Refer to page 6 for each channel's specifications.

Site
Locate the unit in a laboratory or clean industrial environment where ambient temperatures are inside the range of +68°F to +86°F (+20°C to +30°C). The unit will retain its full rated capacity with cooling water temperatures to approximately 86°F (30°C). Above 86°F, derate the cooling capacity 1% for every 1°F above 86°F.

Never place the unit in a location where excessive heat, moisture, orcorrosive materials are present

Electrical Requirements
Control
Rated Voltage: 208VAC ±10%, 50/60Hz, 1Ø
Rated Current: 5Amps

Electrical Requirements
Power
Rated Voltage: 208VAC ±10%, 50/60Hz, 3Ø
Rated Current: 63Amps

Make sure the voltage of the power source meets the specified voltage, ±10%.

The unit construction provides extra protection against the risk of electrical shock by grounding appropriate metal parts. It is the user's responsibility to assure that a proper ground connection is provided to the unit.

Each channel is provided with a 4-conductor line cord for power and a 3-conductor line cord for control.

The wiring code is:

Phase [1] A	U BLK
Phase [2] B	V WHT
Phase [3] C	W RED

The green wire is safety ground and must be attached to the ground bar.

NFPA-79, Section 7.8.1, Exception No2, allows this machine to have the main disconnect remotely mounted "through a flexible cord, cable or conduit providing the disconnect means is in sight from, readily accessible to, and no more than 20 feet (6m) from the machine operator."

Plumbing Requirements
The coolant plumbing connections are located on the rear of the unit. The connections are½" Swagelock fittings. Connect the SUPPLY fittings to the application's inlet. Connect the RETURN fittings to your application's outlet.

Keep the distance between the chiller and your application as short as possible, and use the largest diameter tubing practical. The tubing should be straight and without bends. If diameter reductions are needed make them at the inlet and outlet of your application, not at the chiller.

The reservoir DRAIN connections are on the back of the unit. They are Nupro brass plug valves with a $^{3}/_{8}$" O.D. Swagelock connection.

Start Up
Before starting check all electrical connections and ensure the plumbing connections are correctly made to the fittings on the rear of the unit.

To place the chiller in “off” mode (power available but each channel is off)

-connect power cord to 208V 3Ø supply

-connect control cord to 208V 1Ø supply

-place main and control power breakers in closed position

-unit is now in “off” mode (white POWER lamp will illuminate)

-ensure the EMO (Red Emergency Stop Button) is out

-the cover must be on the power box or the power box interlock placed in the maintenance position

-the cover must be on the heater box or the heater box interlock placed in the maintenance position

To start the channel

-depress the ON/OFF or, if channel is in remote, the remote START button

-the chiller will start as long as no failure conditions are present (channel UNIT OK and RUNNING LEDs illuminated)

To stop the channel

-depress the ON/OFF or, if channel is in remote, the remote STOP button

NOTE: Any failure will place the chiller into the “off” mode.

NOTE: Opening the power, depressing the chiller STOP switch or activating the Emergency Stop Button (EMO) switch places the chiller in “off” mode.

Changing a Value
The **YES** key increments the value. The **NO** key decrements the value. The display will flash as soon as either key is depressed, and will continue to flash until the **ENTER** key is pressed to accept the new value.

The new value will not be used by the controller until the **ENTER** key is depressed and the display stops flashing. If the **NEXT** or **LAST** key is pressed while the value is flashing, the new value will not be accepted. The display will stop flashing and the original value will be displayed. In this case the **NEXT** or **LAST** key can be used to abort data entry. The display will not sequence unless the **NEXT** or **LAST** key is depress again.

The controller will not allow you to enter a value above the maximum or below the minimum value, or any illegal value. If you try to enter an illegal value the display will revert to its original value when the last digit is entered.

Preface

Compliance

Products tested and found to be in compliance with the requirements defined in the EMC standards defined by 89/336/EEC as well as Low Voltage Directive (LVD) 73/23/EEC can be identified by the CE label on the rear of the unit. This label indicates testing has demonstrated compliance with the following directives:

LVD, 73/23/EEC	Complies with UL 3101-1:93
EMC, 89/336/EEC	EN 55011, Class A Verification EN 50082-1:1992 IEC 1000-4-2:1995 IEC 1000-4-3:1994 IEC 1000-4-4:1995

For any additional information refer to the Letter of Compliance that shipped with the unit (Declaration of Conformity).

Unpacking

NOTE: A copy of these instructions is attached to the crate's exterior surface.

Remove the front panel. The panel will serve as a ramp.

Remove the remaining side panels as one piece by unscrewing the lag bolts which hold the sides to the base.

Mount the ramp to the base and install lag bolts to secure the ramp to the base.

Remove the support and strapping.

Extend the four leveling feet on the chiller and then slowly raise the chiller evenly off the support rails.

Remove the support rails by loosening the lag screws.

Lower the chiller onto the castors and then slowly push the chiller towards the ramp.

Reverse these directions to repackage the chiller.

Retain all cartons and packing material until the unit is operated and found to be in good condition. If the unit shows external or internal damage, or does not operate properly, contact the transportation company and file a damage claim. Under ICC regulations, this is your responsibility.

Shipping List

TEL HTD-I Chiller
Exhaust ring with 4 mounting screws
Control system power cord
Main power cord
Declaration of Conformity for CE Mark
QA checklist
Test data
System verification checklist
Flow Diagram
Wiring diagrams (3 pages)
Operator's manual

After-sale Support

NESLAB is committed to customer service both during and after the sale. If you have questions concerning the operation of your unit, contact our Sales Department. Before calling, please refer to the serial number label on the rear of the unit to obtain the following information (see Section II, Description for

serial number label location).

Section I Safety

Warnings

Make sure you read and understand all instructions and safety precautions listed in this manual before installing or operating your unit. If you have any questions concerning the operation of your unit or the information in this manual, please contact our Sales Department (see After-sale Support).

Performance of installation, operation, or maintenance procedures other than those described in this manual may result in a hazardous situation and may void the manufacturer's warranty.

Transport the unit with care. Sudden jolts or drops can cause damage.

Observe all warning labels.

Never remove warning labels.

Never operate damaged or leaking equipment.

Never operate the unit without fluid in the reservoir.

Always turn off the unit and disconnect the power supply from the power source before performing any service or maintenance, or before moving the unit.

Always empty the reservoir before moving the unit.

Never operate equipment with damaged power cords.

Refer service and repairs to a qualified technician.

In addition to the safety warnings listed above, warnings are posted throughout the manual. Read and follow these important instructions. Failure to observe these instructions can result in permanent damage to the unit, significant property damage, or personal injury or death.

Material Data Safety Sheets

Galden® HT-200	Ausimont USA, Inc. PO Box 26 Thorofare, NJ 08086-0026 609-853-8119
LOCTITE®	LOCTITE Corporation 705 North Mountain Road Newington, CN 06111 203-278-1280
De-Ox Anti-Oxident	Ilsco 4730 Madison Road

Cincinnati, OH 45227
513-871-4000

Section II General Information

Description

The HTD-I Water-Cooled Chiller is designed to provide a continuous flow of Galden® heat transfer fluid at a constant temperature and flow rate.

The unit consists of 2 water-cooled refrigeration systems, 2 fluid reservoirs, 2 fluid recirculation pumps and 2 microprocessor temperature controllers. A 5 kilowatt heater is located in each fluid reservoir.

Specifications

Temperature Range	-20°C to 150°C
Reservoir Volume	5 Gallons 19 Liters
Unit Dimensions[1] (Outer Envelope) (H x W x D)	59 x 31 x 34 Inches 149.9 x 81.3 x 86.4 Centimeters
Frame Dimensions (H x W x D)	55 x 31 x 34 Inches 139.7 x 78.7 x 86.4 Centimeters
Cooling Capacity[2]	1050 watts @ -10°C 962 Kcal @ -10°C 3580 BTU/Hr @ -10°C
Heating Capacity	5000 watts @ 208V 4300 Kcal @ 208V 17050 BTU/Hr @ 208V
	15 LPM @ 5 Kg/Cm^2 4 GPM @ 71PSIG

1. Includes casters.
2. Cooling capacities were obtained at 30°C ambient using HT-200 Galden® heat transfer fluid with 208VAC, 50Hz power. Cooling capacities vary depending on the fluid temperature, ambient temperature and cooling fluid .
2. 208VAC, 50 Hz power.

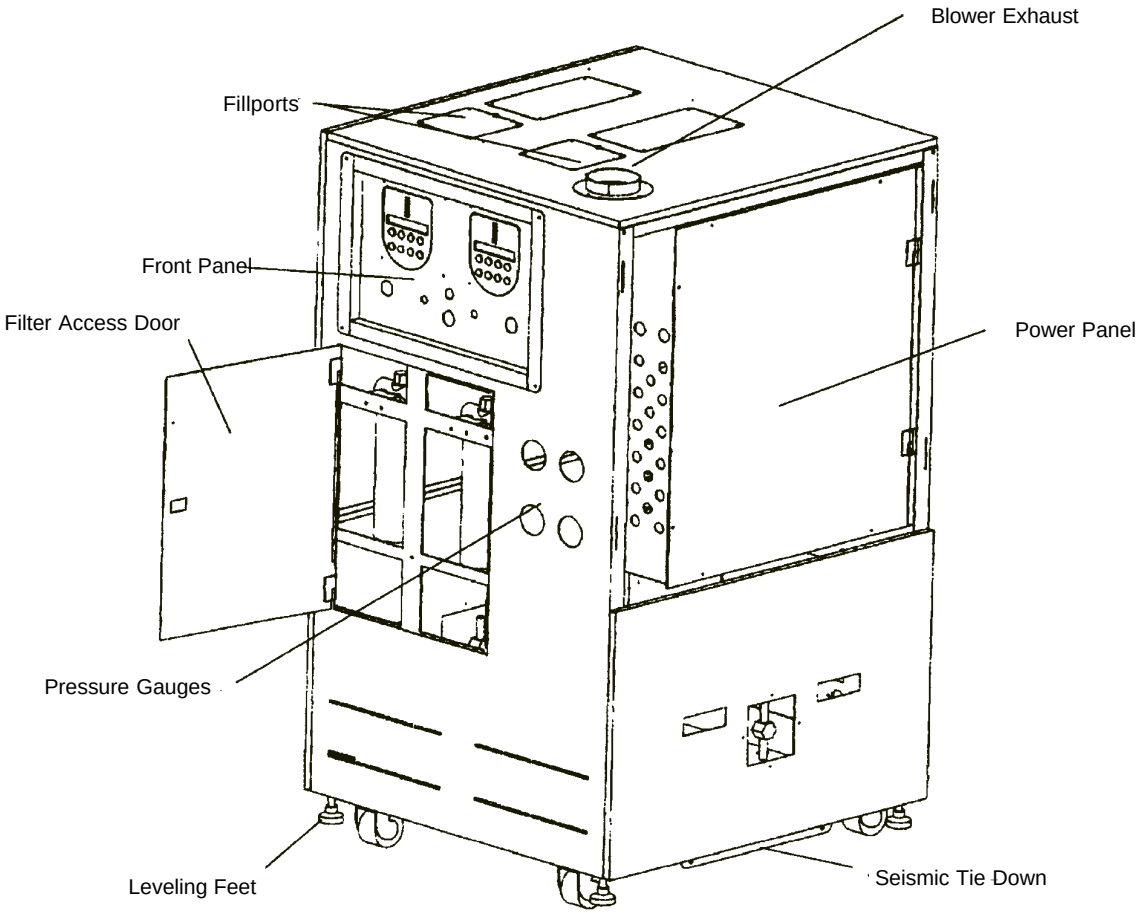

The unit is equipped with four lockable casters and leveling feet. The leveling feet can be retracted 2¾" (70mm) from the floor and extended 6⅛" (156mm) from the unit's case bottom.

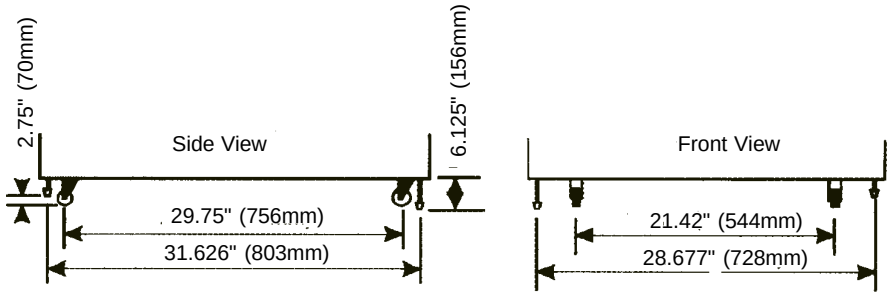

Section III Installation

Pumping Capacity[3]

Site

Locate the unit in a laboratory or clean industrial environment where ambient temperatures are inside the range of +20°C to +30°C (+68°F to +86°F).

The unit will retain its full rated capacity with cooling water temperatures to approximately 30°C (86°F). Above 30°C, derate the cooling capacity 1% for every 0.5°C above 30°C.

Never place the unit in a location where excessive heat, moisture, or corrosive materials are present.

Electrical Requirements

The unit construction provides extra protection against the risk of electrical shock by grounding appropriate metal parts. It is the user's responsibility to assure that a proper ground connection is provided to the unit.

Control
Rated Voltage: 208VAC ±10%, 50/60Hz, 1Ø
Rated Current: 5Amps

Power
Rated Voltage: 208VAC ±10%, 50/60Hz, 3Ø
Rated Current: 63Amps

Make sure the voltage of the power source meets the specified voltage ±10%.

The prototype is provided with a 4-conductor line cord for power and a 3-conductor line cord for control.

The wiring code is:

Phase A	208VAC
Phase B	208VAC
Phase C	208VAC

The green wire is safety ground and must be attached to the ground bar.

NFPA-79, Section 7.8.1, Exception No 2, allows this machine to have the main disconnect remotely mounted "through a flexible cord, cable or conduit providing the disconnect means is in sight from, readily accessible to, and no more than 20 feet (6m) from the machine operator."

Plumbing Requirements

The plumbing connections are located on the bottom rear of the unit. The connections are ½" Swagelock fittings. Connect the SUPPLY fitting to the inlet of the application. Connect the RETURN fittings to the application outlet.

Keep the distance between the chiller and your application as short as possible, and use the largest diameter tubing practical. The tubing should be straight and without bends. If diameter reductions are needed make them at the inlet and outlet of your application, not at the chiller.

The reservoir DRAIN connections are also on the rear of the unit. They are Nupro brass plug valves with a ⅜" O.D. Swagelock connection. The drain outlet is located directly below the drain valve handle.

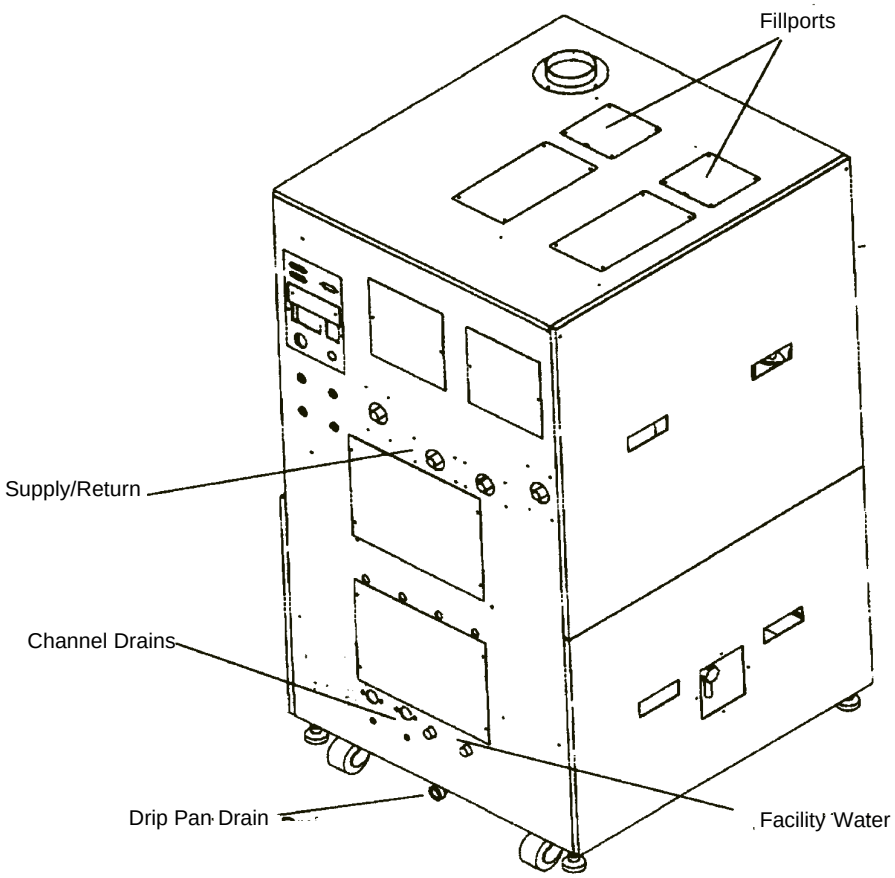

Fluids



The unit is designed to use Galden® HT200 or Flourinert 4236 as a heat transfer fluid..



Do not use water as a substitute fluid.

Never use flammable or corrosive fluids with the unit. Do not use automobile antifreeze. Commercial antifreeze contains silicants that can damage the pump seals and cause leaks. Use of automobile antifreeze will void the manufacturer's warranty.

Filling Requirements

Remove the reservoir access cover and then the filler cap from the top of the reservoir. Using a funnel, carefully fill the reservoir with fluid.

Fill the reservoir until the ADD FLUID LED on the microprocessor extinguishes.

The amount of recirculating fluid required depends on the total requirements of the application system. If substantial lengths of recirculating lines are used, add enough fluid to compensate for their volume. The maximum reservoir volume is 5 gallons (19 liters).

Replace the filler cap and access panel.

Section IV Operation

Start Up

Before starting the unit check all electrical connections and ensure the plumbing connections are correctly made to the fittings on the rear of the unit.

To place the chiller in "off" mode (power available but each channel is off)

-connect power cord to 208V 3Ø supply

-connect control cord to 208V 1Ø supply

-place main and control power breakers in closed position

-unit is now in "off" mode (white POWER lamp will illuminate)

-pull out the EMO (Red Emergency Stop Button)

-the cover must be on the power box or the power box interlock placed in the maintenance position

-the cover must be on the heater box or the heater box interlock placed in the maintenance position

To start either channel

-depress the ON/OFF or, if channel is in remote, the remote START button

-the chiller will start as long as no failure conditions are present (channel UNIT OK and RUNNING LEDs illuminated)

To stop either channel

-depress the ON/OFF or, if channel is in remote, the remote STOP button

NOTE: Any failure will place the chiller in the "off" mode.

NOTE: Removing the power or heater box cover, depressing the chiller STOP switch or activating the Emergency Stop Button (EMO) switch places the chiller in "off" mode.

Front Panel Controls

1 POWER light (white)
The POWER light indicated that the main disconnect circuit breaker is on, the phase voltage monitor is operational, and all electrical enclosure doors and interlocks are set.

28 status indicators LEDs (14/channel)

2 vacuum florescent displays, alphanumeric, 10 character (1/channel)

16 control switches, low profile pressure sensitive (8/channel)

1 EMO emergency stop button, push-pull

2 warning/failure buzzers (1/channel)

2 LOCAL/REMOTE selector switches (1/channel)

Temperature control is done through PID algorithms. Heat and cool have separate PID parameters. PID values can be changed, see Display section.

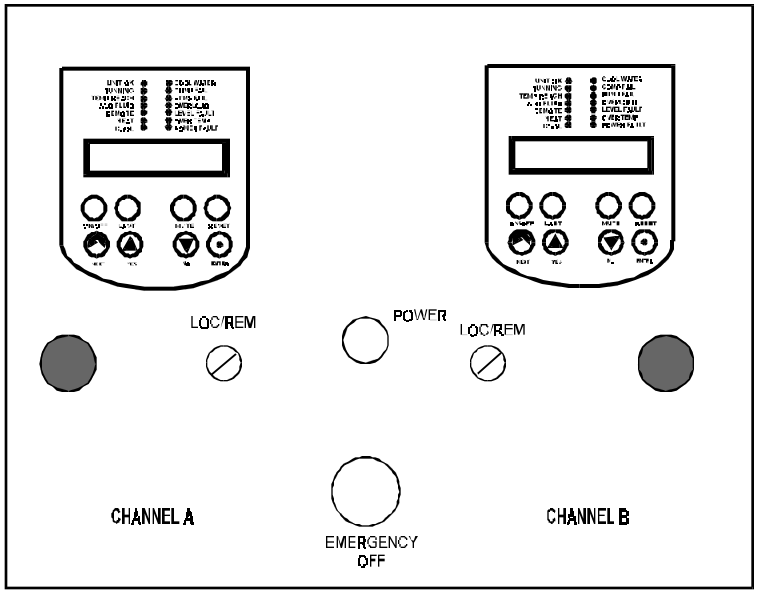

Front Panel Gauges

2 fluid supply pressure gauges. Reads the fluid pressure at each channel outlet.

2 fluid filter inlet pressure gauges. Reads the fluid pressure at each channel filter inlet.

Rear Panel Controls

Main Disconnect Circuit Breakers
The unit is provided with:

1 63 AMP GFI circuit breaker for the power system

1 16 AMP GFI circuit breaker for the control system

2 25-pin D-subminiature connectors (CN1, CN2) for RS-232 communications (1/channel)

1 24-pin Type 57F connector (CN3) for control signal I/O

1 power cable, #4 AWG with 4 conductors. "SO" line cord, 10 meters in length

1 control cable, #12 AWG with 3 conductors. "SO" line cord, 10 meters in length.

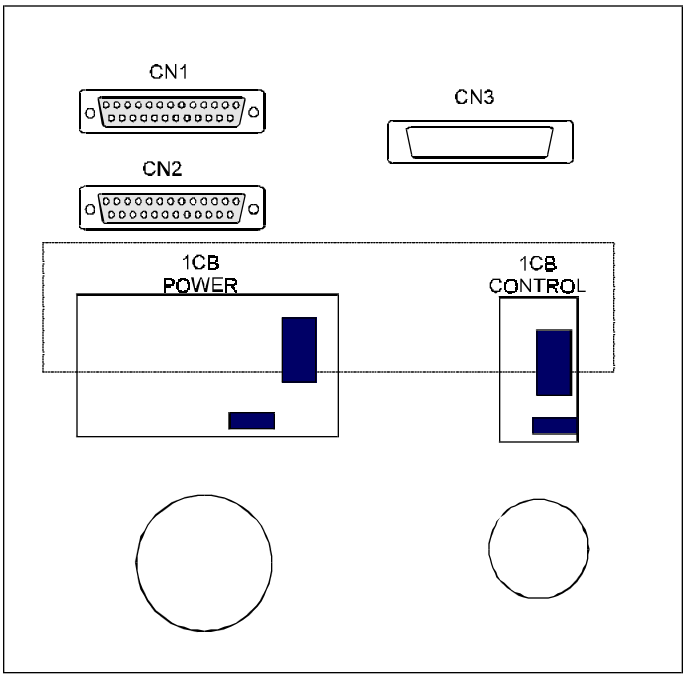

Controller Keypad

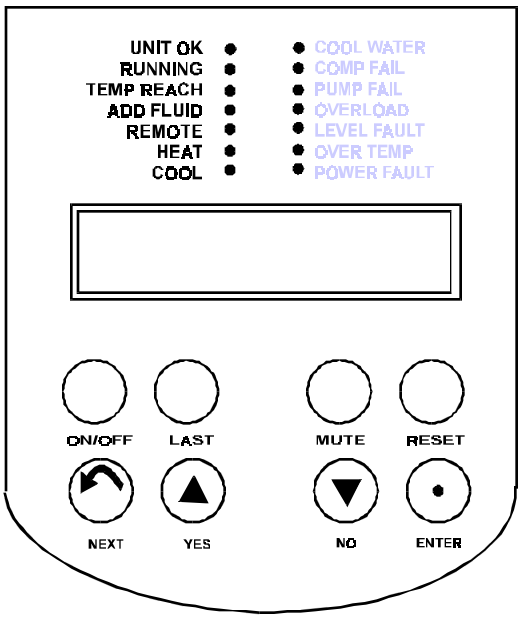

ON/OFF Toggles the controller between on and off. The controller will not switch to the on mode unless proper condition exist inside the unit. See Error Messages in this section.

LAST Scrolls backward through the displays.

MUTE Toggles audible alarm silence function for the current alarm. The MUTE key will not prevent a new warning or failure condition.

RESET Clears the warning or failure condition status.

NEXT Scrolls forward through the menus.

YES Answers Yes to Y/N questions, increments numerical values upward for setting numeric values.

NO Answers NO to Y/N questions, increments numerical values downward for setting numeric values.

ENTER Used to accept new values.

Indicator Lamps

UNIT OK (Yellow Light)
When lit, the unit is in either stand by or running. No chiller failures or warnings are present.

RUNNING (Yellow Light)
When lit, the unit is running and cooling/heating is taking place. No chiller failures or warnings present.

TEMP REACH (Yellow Light)
When lit, the unit is running and cooling/heating is taking place. The fluid temperature matches the setpoint (± the ready width).

ADD FLUID (Yellow Light)
When lit, the unit is in run or off and the coolant level is below the low level value set on the controller. The unit continues to operate and the audible alarm will sound. The LEVEL OK lamp is extinguished and the WARNING SIGNAL is given.

REMOTE (Yellow Light)
When lit, the unit will respond to the remote setpoint, ready width and remote start/stop.

HEAT (Yellow Light)
When lit, the unit is in run. The lamp is on steady when the controller is supplying 100% heat. The lamp is off when the controller is not supplying any heat. The lamp is flashing when the controller is controlling the temperature inside the heat PID proportional band.

COOL (Yellow Light)
When lit, the unit is in run. The lamp is on steady when the controller is in full cool mode. The lamp is off when the controller is not supplying any cooling. The lamp is flashing when the controller is controlling the temperature inside the cool PID proportional band.

COOL WATER (Red Light)

When lit, a cooling water failure exists. The lamp is on when no cooling water is available to the chiller channel. There will be no flow indication on the flow meter, the high pressure cutout will activate and the UNIT OK lamp will extinguish.

NOTE: To restart the channel, the limit switch or failure must be cleared or repaired the alarm reset button must be pressed.

COMP FAIL (Red Light)
When lit, the unit was running and cooling/heating was taking place. This condition is reached by the following:

1) high pressure limit switch opening,

2) low pressure switch opening,

3) high injector temperature exceeded.

The channel stops and the audible alarm sounds. A FAIL SIGNAL is given, and the COMP FAIL lamp illuminates.

NOTE: To restart the unit, the limit switch or failure must be cleared or repaired, the alarm reset button is pressed and the unit placed in run.

PUMP FAIL (Red Light)
When lit, the unit was running and cooling/heating was taking place. This condition is reached by the following:

1) low or no Galden® fluid flow,

2) pump overload relay shorted,

3) pump breaker tripped.

A FAIL SIGNAL is given, the PUMP FAIL lamp illuminates, and the UNIT OK lamp extinguishes.

NOTE: To restart the channel, the limit switch or failure must be cleared or repaired and the alarm reset button is pressed.

OVERLOAD (Red Light)
When lit, the unit was running and cooling/heating was taking place. This condition is reached by the following:

1) main GFI breaker tripped,

2) compressor breaker tripped,

3) pump breaker tripped,

4) heater breaker tripped

5) pump overload relay tripped,

6) compressor overload tripped.

A FAIL SIGNAL is given, the OVERLOAD lamp illuminates and the UNIT OK lamp extinguishes.

NOTE: To restart the channel, the limit switch or failure must be cleared or repaired and the alarm reset button is pressed.

LEVEL FAULT (Red Light)
When lit, the unit was running or in the off mode and the coolant level was below the low level value or above the high level value set on the controller. The channel turns off and the audible alarm sounds. A FAIL SIGNAL is given, the LEVEL FAULT lamp illuminates, and the UNIT OK lamp extinguishes.

NOTE: To restart the unit, the limit switch must be cleared and the unit placed in run.

OVERTEMP (Red Light)
When lit, the unit was running and cooling/heating was taking place. This condition is reached by the following:

1) high Galden® fluid temperature in the tank,

2) high cabinet temperature,

3) high fluid outlet temperature.

A FAIL SIGNAL is given, the OVERTEMP lamp illuminates, and the UNIT OK lamp extinguishes

NOTE: To restart the channel, the limit switch or failure must be cleared or repaired and the alarm reset button pressed.

POWER FAULT (Red Light)
When lit, the unit was running or in the off mode and:

1) the phase and voltage monitor relay detected a problem,

2) the door interlock is tripped,

3) loss of 12VDC.

NOTE: To restart the unit, the limit switch must be cleared, the alarm reset button pressed and the unit placed in run.

Failure and warning Condition Table

Error Message	Indications	Type	Corrective action
FLUID RTD	UNIT OK off, RUNNING off	Failure	Check connection, replace RTD.
INJ RTD	UNIT OK off, RUNNING off	Failure	Check connection, replace RTD.
PHASE VOLT	UNIT OK off, RUNNING off, POWER FAULT on	Failure	Check input voltage for 208±10%, check for three phase power, and check for phase voltage imbalance.
EMG STOP	UNIT OK off, RUNNING off	Failure	Reset emergency stop button by pulling out.
DOOR INTLK	UNIT OK off, RUNNING off, POWER FAULT on	Failure	Check that power box and heater door are in place. Check that door interlocks are working properly.
PUMP OVLD	UNIT OK off, RUNNING off, PUMP FAIL on, OVERLOAD on	Failure	Overload must be reset before unit will run. If overload has tripped more than twice investigation of pump is required.
COMP OVLD	UNIT OK off, RUNNING off, COMP FAIL on, OVERLOAD on,	Failure	Overload must be reset before unit will run. If overload has tripped more than twice investigation of compressor is required.
LOW PRESS	UNIT OK off, RUNNING off, COMP FAIL on	Failure	Reset low pressure cutout and if LPC trips again check charge in compressor.
HIGH PTESS	UNIT OK off, RUNNING off, COMP FAIL on	Failure	Reset high pressure cutout and if HPC trips again check charge in compressor.
COOL WATER	UNIT OK off, RUNNING off, COOL WATER on	Failure	Reset high pressure cutout and research loss of facility cooling water.
TEMP FAIL	UNIT OK off, RUNNING off, OVERTEMP on	Failure	Check cooling fan for proper airflow.
HI INJ TEMP	UNIT OK off, RUNNING off, COMP FAIL on	Failure	Check for proper injector solenoid operation.
HI HTR TEMP	UNIT OK off, RUNNING off, OVERTEMP on	Failure	Check for proper heater operation.
HI LIQ TEMP	UNIT OK off, RUNNING off, OVERTEMP on	Failure	Check for proper heater operation.
HI TNK TEMP	UNIT OK off, RUNNING off, OVERTEMP on	Failure	Check for proper heater operation.

Error Message	Indications	Type	Corrective action
NO FLOW	UNIT OK off, RUNNING off, PUMP FAIL on	Failure	Check blockage in supply line, check flow out of pump.
LOW FLOW	UNIT OK off, RUNNING on, PUMP FAIL on	Warning	Check blockage in supply line, check flow out of pump.
LOW LEVEL	UNIT OK off, RUNNING off, LEVEL FAULT on	Failure	Add fluid until level resets, check for leaks.
HIGH LEVEL	UNIT OK off, RUNNING off, LEVEL FAULT on	Failure	Drain fluid until level resets.
ADD FLUID	UNIT OK off, RUNNING on, ADD FLUID on	Warning	Add fluid until level resets, check for leaks.
CHAN BKR	UNIT OK off, RUNNING off, OVERLOAD on	Failure	Breaker must be reset before unit will run. If breaker has tripped more than twice investigation of channel is required.
PUMP BKR	UNIT OK off, RUNNING off, OVER LOAD on	Failure	Breaker must be reset before unit will run. If breaker has tripped more than twice investigation of pump is required.
HEATER BKR	UNIT OK off, RUNNING off, OVER LOAD on	Failure	Breaker must be reset before unit will run. If breaker has tripped more than twice investigation of heater is required.
COMP BKR	UNIT OK off, RUNNING off, COMP FAIL on, OVERLOAD on	Failure	Breaker must be reset before unit will run. If breaker has tripped more than twice investigation of compressor is required.
LOSS 12VDC	UNIT OK off, RUNNING off	Failure	Check FU12 and FU13, replace if blown. Also check 1PWS and replace if necessary.
REM STOP	UNIT OK off, RUNNING off		This is not a fault condition. To restart the unit locally place the LOCAL/REMOTE selector switch to the LOCAL position.
TEMP WARN	UNIT OK off, RUNNING on, OVERTEMP on	Warning	Check cooling fan for proper airflow.

Changing a Value

The **YES** key increments the value. The **NO** key decrements the value.

The display will flash as soon as either key is depressed, and will continue to flash until the **ENTER** key is pressed to accept the new value.

The new value will not be used by the controller until the **ENTER** key is depressed and the display stops flashing.

If the **NEXT** key is pressed while the value is flashing, the new value will not be accepted. The display will stop flashing and the original value will be displayed. In this case the **NEXT** key can be used to abort data entry. The display will not sequence unless the **NEXT** key is depress again.

For large values the display can be changed by manipulating the individual digits. Press the **YES** key and the **NO** key at the same time. The most significant digit will start to flash. The **YES** key increments or the **NO** key decrements the digit. Press the **ENTER** key to accept the digit and to move to the next most significant digit. Repeat until all digits are entered. Pressing the **NEXT** key before all digit are entered will abort the procedure and return the display to the original value.

The controller will not allow you to enter a value above the maximum (+150°C) or below the minimum (-20°C). If you try to enter an value outside the range, the display will revert to its original value.

Controller Displays

An alphanumeric display presents numeric readings of various operating conditions within the chiller. Display function is selected by pressing the appropriate keys to move through a menu of available information.

Various controller loops allow you to display and/or alter different parameters of the controller. They can be accessed from the temperature display by pressing and holding the key combinations shown on Figure 1 on the next page. Public loops are designed for day-to-day operation, private loops should be run by only qualified technicians.

When the controller is first powered up it goes through a short self test and then enters the Operator's Loop, displaying the reservoir fluid temperature.

NOTE: Should you desire to return to the temperature display and abort any changes, keep pressing the **NEXT** until the display reads **SAVE?** Press **NO**.

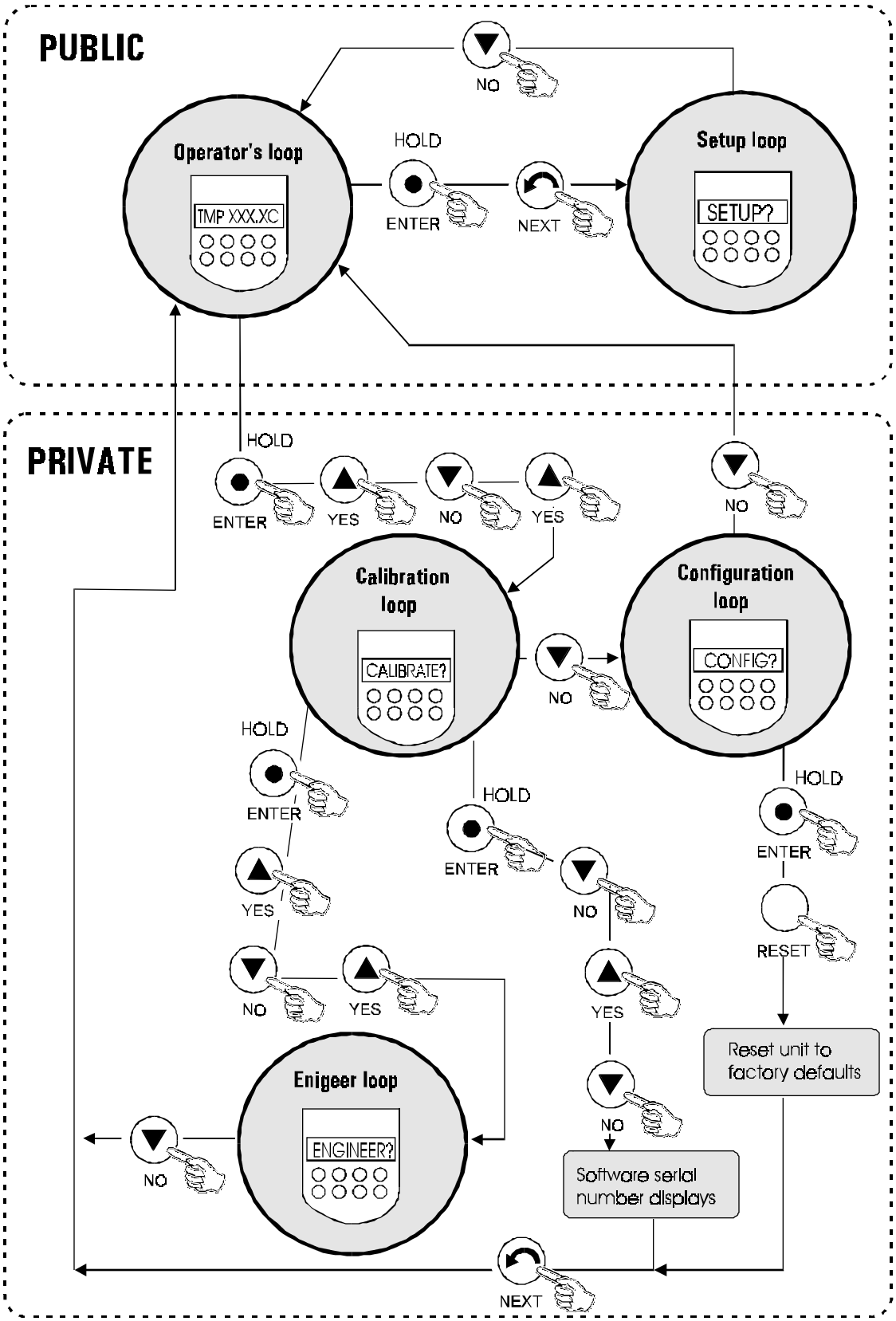

Figure 1 Changing Loops

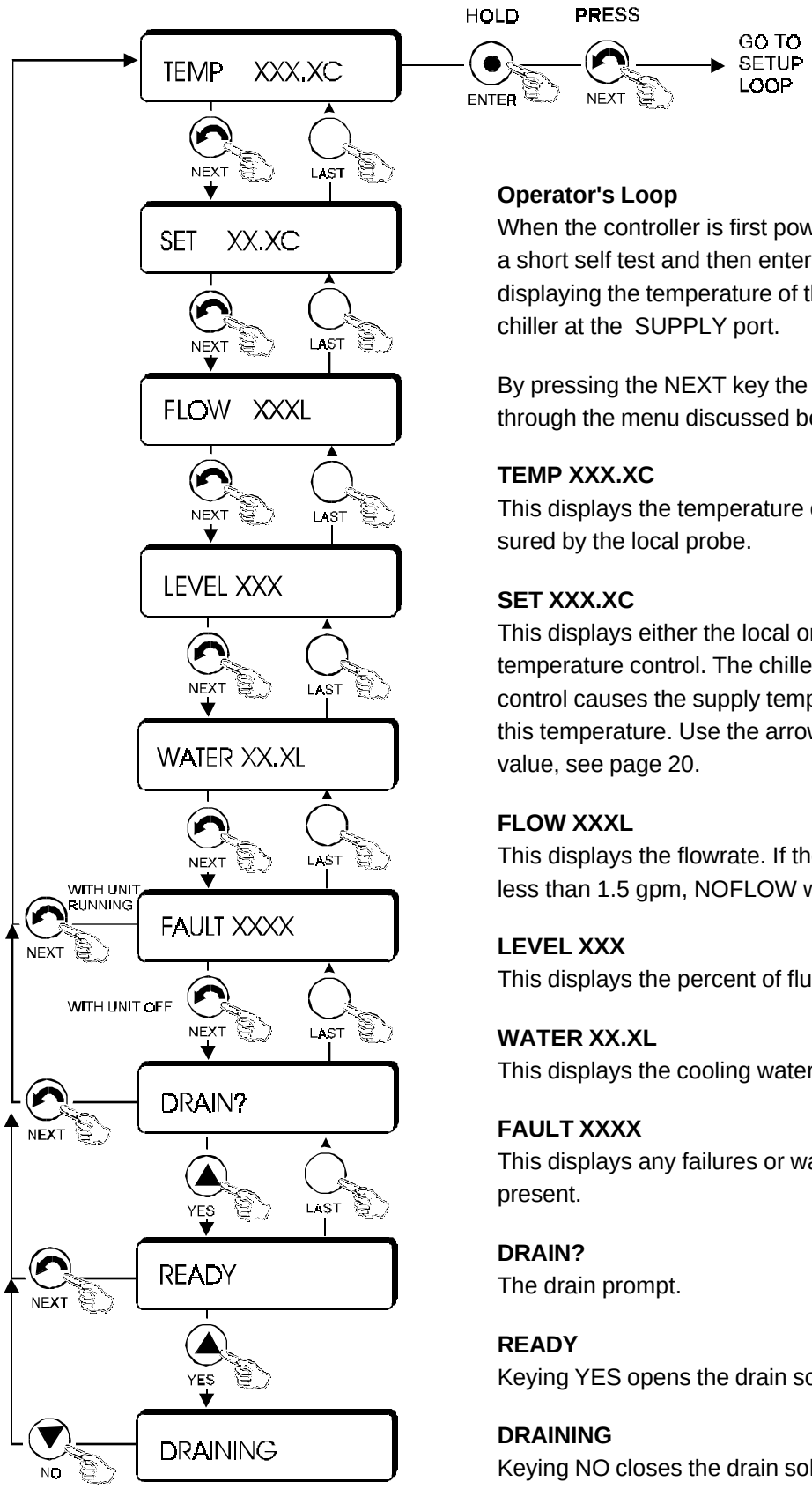

Operator's Loop
When the controller is first power up it goes through a short self test and then enters the Operator's Loop, displaying the temperature of the coolant leaving the chiller at the SUPPLY port.

By pressing the NEXT key the controller will step through the menu discussed below.

TEMP XXX.XC
This displays the temperature of the coolant measured by the local probe.

SET XXX.XC
This displays either the local or remote setpoint for temperature control. The chiller's temperature control causes the supply temperature to be equal to this temperature. Use the arrow keys to change the value, see page 20.

FLOW XXXL
This displays the flowrate. If the flow alarm is set for less than 1.5 gpm, NOFLOW will be displayed.

LEVEL XXX
This displays the percent of fluid in the tank.

WATER XX.XL
This displays the cooling water flow rate.

FAULT XXXX
This displays any failures or warnings that are present.

DRAIN?
The drain prompt.

READY
Keying YES opens the drain solenoid valve.

DRAINING
Keying NO closes the drain solenoid valve.

Figure 2 Operator's Loops

Setup Loop

The Setup Loop allows the operator to change the low flow setpoint and low flow; the normal level setpoint and alarm; the ready width and delay time; and the controller constants.

To enter this loop you must be in the Operator's Loop and displaying the temperature. Depress and hold the ENTER key and then press the NEXT key. Adjust values with the up and down arrow keys. Press ENTER for the controller to accept each new entry.

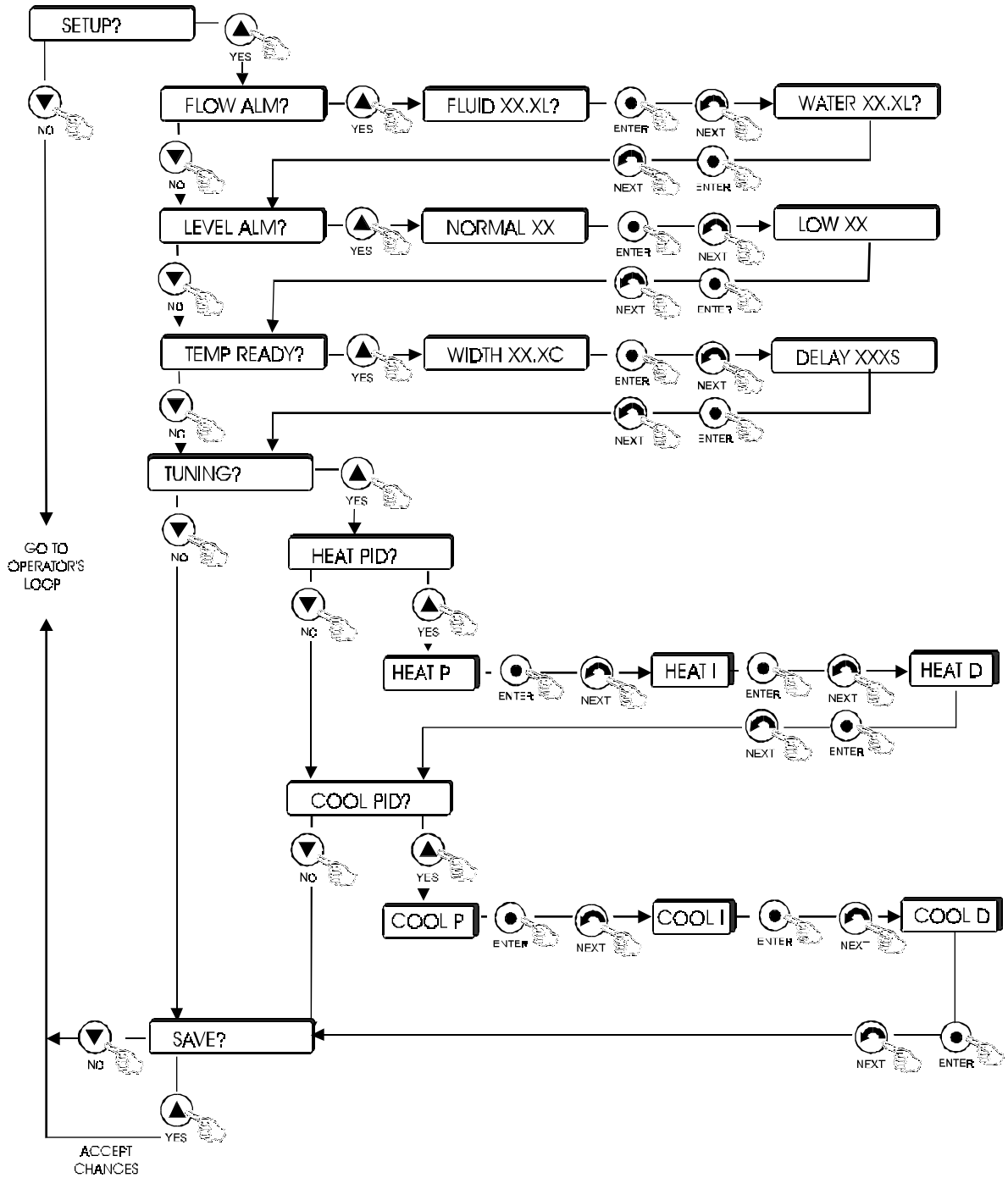

Figure 3 Setup Loop

Calibration Loop

The unit is factory calibrated. Changing any values will nullify temperature indications. Only qualified technicians should use this loop. Improper calibration can affect product temperature measurements.

To enter this loop you must be in the Operator's Loop and displaying the temperature. Depress and hold the ENTER key. While holding the ENTER key enter the key sequence YES-NO-YES. Answer YES to CALIBRATE? Adjust values with the up and down arrow keys. Press ENTER for the controller to accept each new entry.

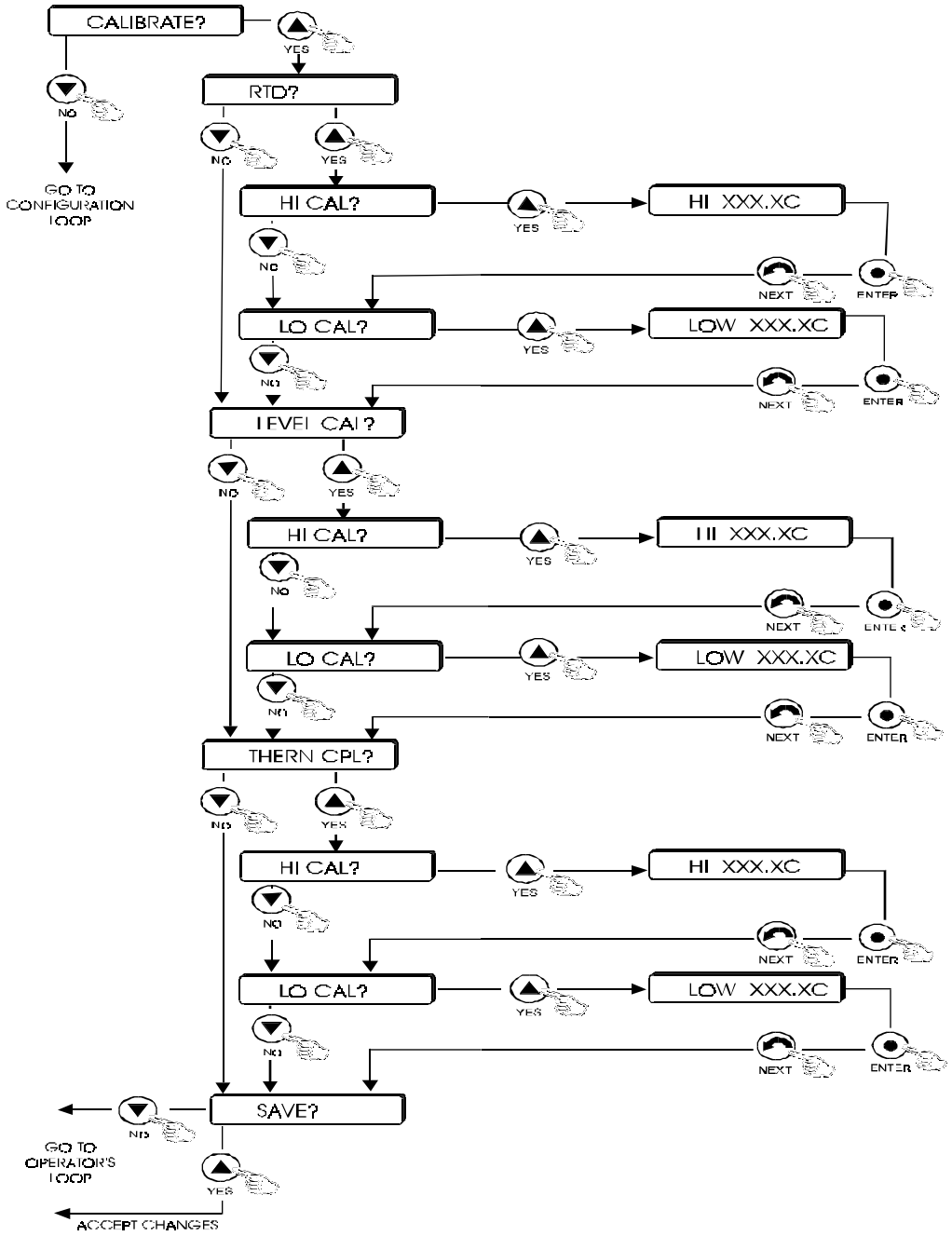

Figure 4 Calibration Loop

Configuration Loop

The unit is factory configured. Changing any values will nullify temperature indications. Only qualified technicians should use this loop. Improper calibration can affect product temperature measurements.

The Configuration Loop allows you to adjust frequency; cooling valve cycle time; and adjust the blower for high, low, or low only operation.

To enter this loop you must be in the Operator's Loop and displaying the temperature. Depress and hold the ENTER key. While holding the ENTER key enter key the sequence YES-NO-YES. Answer NO to CALIBRATE? and then YES to CONFIGURE? Adjust values with the up and down arrow keys. Press ENTER for the controller to accept each new entry.

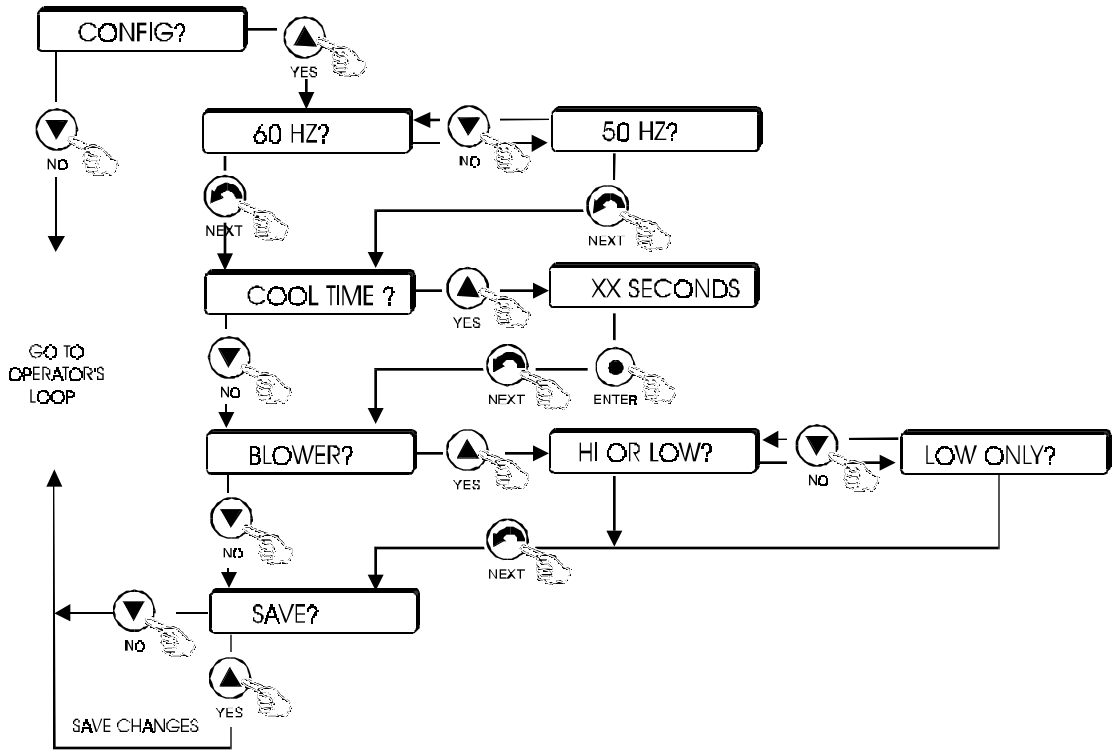

Figure 5 Configuration Loop

Engineer Loop

The Engineer Loop allows you to set the unit alarms and adjust the blower.

To enter this loop you must be at the CALIBRATE? prompt. While holding the ENTER key enter the key sequence NO-YES-NO.

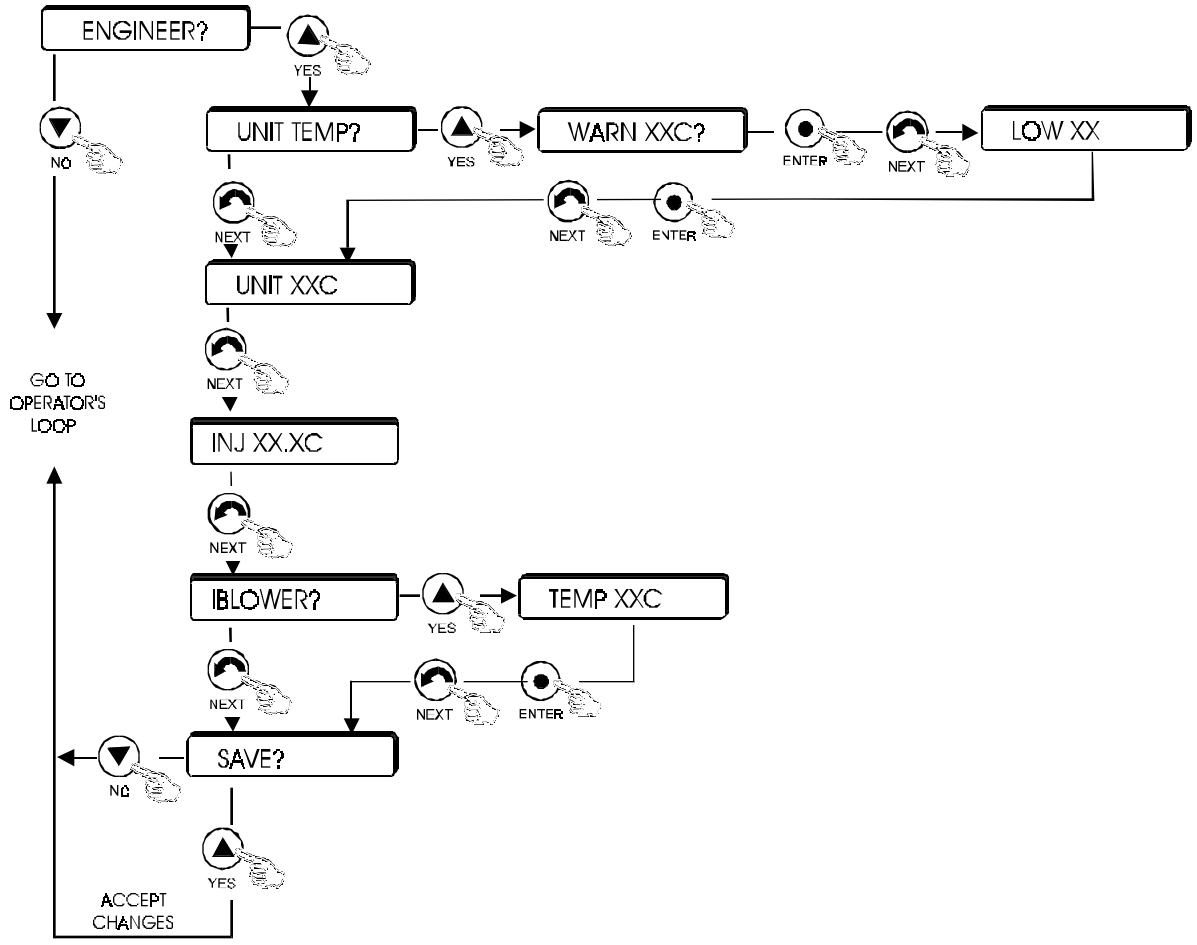

Figure 6 Engineer Loop

Error Messages

Error messages are displayed whenever certain conditions are detected. When this occurs the error message will be displayed by alternating the error message and the normal display. The keys and menus will perform normally.

All error messages will disappear when the error condition is corrected.

FLUID RTD
Indicates the internal temperature probe has failed, i.e. shorted or opened. Upon failure the channel enters the off mode.

PHASE VOLT
Indicates the phase voltage monitor relay has detected an incoming power problem, i.e., loss of phase, phase voltage imbalance, phase reversal, and low voltage. Upon failure the channel enters the off mode.

PUMP OVLD
Indicates the pump motor overload has tripped. Upon failure the channel enters the off mode.

COMP OVLD
Indicates the compressor motor overload has tripped. Upon failure the channel enters the off mode.

LOW PRESS
Indicates the refrigeration system low pressure switch has detected low pressure. Upon failure the channel enters the off mode. The switch must be manually reset.

HIGH PRESS
Indicates the refrigeration system high pressure switch has detected high pressure. Upon failure the channel enters the off mode. The switch must be manually reset.

HI HTR TEM
Indicates the heater high temperature cutout has detected over temperature. Upon failure the channel enters the off mode.

HI INJ TEM
Indicates the refrigeration system high temperature cutout has detected over temperature. Upon failure the channel enters the off mode.

HI LIQ TEM
Indicates the controller sensed a liquid temperature over normal operating range. Upon failure the channel enters the off mode.

NO FLOW
Indicates the controller sensed a liquid line flow loss, i.e., less than 5.75 LPM. Upon failure the channel enters the off mode.

LOW LEVEL
Indicates the controller sensed a liquid level in the tank that is below the heater level. Upon failure the channel enters the off mode.

HIGH LEVEL
Indicates the controller sensed a liquid level in the tank that is above the proper operating level range. Upon failure the channel enters the off mode.

REM STOP
With the channel in the remote mode, indicates the remote stop button is open.

MAIN BKR
Indicates the main breaker has tripped. Upon failure the channel enters the off mode. The breaker must be manually reset.

CHAN BKR
Indicates the channel breaker has tripped. Upon failure each channel enters the off mode. The breaker must be manually reset.

PUMP BKR
Indicates the pump breaker has tripped. Upon failure the channel enters the off mode. The breaker must be manually reset.

COMP BKR
Indicates the compressor breaker has tripped. Upon failure the channel enters the off mode. The breaker must be manually reset.

HEATER BKR
Indicates the heater breaker has tripped. Upon failure the channel enters the off mode. The breaker must be manually reset.

TEMP FAIL
Indicates the internal thermal couple has detected an over temperature condition. Upon failure the channel enters the off mode.

HI TNK TEM
Indicates the tank High Temperature Cutout (HTC) has detected an over temperature condition. Upon failure the channel enters the off mode. The HTC must be manually reset.

EMO
Indicates the EMO button is depressed. Each channel enters the off mode.

DOOR INTLK
Indicates a door interlock (heater boxes or power box) is open. Each channel enters the off mode.

LOSS 12VDC
Indicates the internal 12 volt power supply has failed. Each channel enters the off mode.

COOL WATER
Indicates no cooling water detected so the high pressure cutout opened. The channel enters the off mode.

INJ RTD
Indicates the refrigeration system liquid injector temperature sensor has failed, i.e., shorted or opened.

LOW FLOW
Indicates the controller senses a liquid line flow that is less than a proper operating flow.

ADD FLUID
Indicates the controller senses a tank liquid level that is less than a proper operating level.

TEMP WARM
Indicates the internal thermal couple has detected an over temperature condition. The fan enters the high mode, if possible.

Section IV Special Features

Heater Package

Each heater package consists of a 5000 watt (@208V, 3Ø) immersion heater in the unit's fluid reservoir, and a high temperature limit device. The high temperature limit device disconnects power to the heater if the heater surface temperature exceeds a preset limit.

The heater high temperature limit device senses the surface temperature of the heater. If the heater temperature becomes too high, the limit device opens a mechanical relay to remove power to the heater and pump.

The heater surface temperature may operate several degrees higher than the reservoir fluid. The limit device is factory set to 200°C.



For personal safety and equipment reliability, do not adjust the high temperature limit device.

To reset a tripped temperature limit device depress the reset switch on the back of the unit.

NOTE: The microprocessor controller will indicate a fault and must be manually reset before the unit can be placed in the run mode.

Pump Motor Overload Protector

The unit is equipped with a pump motor overload protector. The overload protector prevents the pump motor from damage due to excessive current. If an overload occurs, due, for example, to excessive pressure or flow, or excessive ambient temperatures, the overload protector will shut off the pump motor.

NOTE: The microprocessor controller will indicate a fault and must be manually reset before the unit can be placed in the run mode.

Compressor Motor Overload Protector

The unit is equipped with a compressor motor overload protector. The overload protector prevents the compressor motor from damage due to excessive current. If an overload occurs, due, for example, to excessive pressure, excessive ambient temperatures, or high suction temperatures, the overload protector will shut off the compressor.

NOTE: The microprocessor controller will indicate a fault and must be manually reset before the unit can be placed in the run mode.

Pressure Relief Valves

The pressure relief valve establishes the maximum operating pressure of the unit. If the pressure of the fluid leaving the pump exceeds the valve setting, the relief valve will bypass fluid within the unit to limit the pressure. The valve does not determine the system operating pressure; the system operating pressure is determined by the back pressure of the connected equipment. If adjustment seems necessary, consult our service department for assistance.

High Pressure Cutout

If the unit's refrigeration discharge pressure become too high, the high pressure cutout activates and shuts down the unit. High pressure can be caused by a lack of cooling water flow to the condenser or debris in the refrigeration lines. The cutout is located on the back of the unit.

Once the cause of the problem has been identified and corrected you must manually reset the cutout. Locate the white reset switch on the high pressure cutout. Press in on the switch until a "click" is heard. If the reset does not "click" the cutout was not activated and the unit shut down occurred for another reason.

NOTE: The microprocessor controller will indicate a fault and must be manually reset before the unit can be placed in the run mode.

NOTE: A main cause of high discharge pressure is insufficient facility cooling water flow or pressure change. Refer to Section VII, Troubleshooting on page 42.

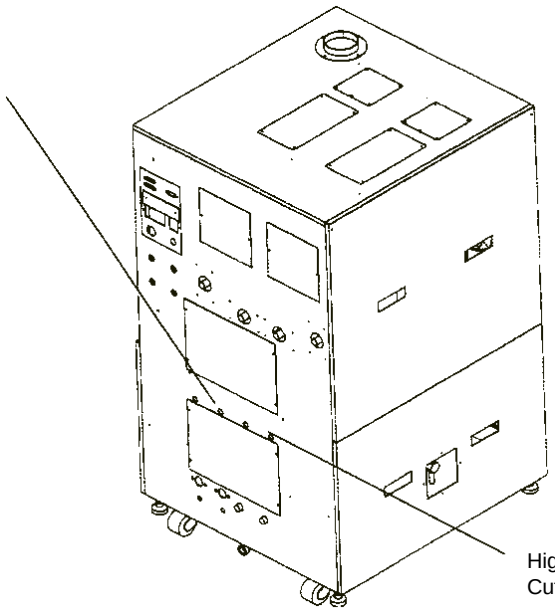

Low Pressure Cutout

If the unit's refrigeration discharge pressure become too low, the low pressure cutout activates and shuts down the unit. The cutout is located on the back of the unit.

Once the cause of the problem has been identified and corrected you must manually reset the cutout. Locate the white reset switch on the low pressure cutout. Press in on the switch until a "click" is heard. If the reset does not "click" the cutout was not activated and the unit shut down occurred for another reason.

NOTE: The microprocessor controller will indicate a fault and must be manually reset before the unit can be placed in the run mode.

High Temperature Cutout

Each channel's tank is equipped with a High Temperature Cutout (HTC). Each HTC is installed on the channel's tank outlet. Should the tank's fluid temperature become too high, the HTC trips and that channel enters the off mode. The HTC is located on the back of the unit.

Once the cause of the problem has been identified and corrected, you must manually reset the HTC.

NOTE: The microprocessor controller will indicate a fault and must be manually reset before the unit can be placed in the run mode.

Cabinet High Temperature

The chiller is equipped with a thermal couple that monitors the power box temperature. Should the unit's internal temperature become too high (>55°C), Channel A enters the off mode.

NOTE: The microprocessor controller will indicate a fault and must be manually reset before the unit can be placed in the run mode.

Electrical Interlocks

Each heater electrical box and the unit's power box is equipped with mechanical interlocks. If any is removed while the chiller is operating, the main chiller power will be disconnected and each channel will enter the off mode.

NOTE: Each interlock can be pulled out to override normal operation and allow the chiller to operate during servicing.

Tank Relief Valve

For safety reasons each reservoir is equipped with pressure and vacuum relief valves. Each valve is a Nupro® check valve. The pressure and vacuum valves are designed to operate at 0.7 kg/cm^2 (10PSI) and 0.02 kg/cm^2 (0.33PSI) respectively.

High Injector Temperature

If the unit's refrigeration suction temperature become too high, the high injector temperature sensor will indicate an over temperature to the controller and the channel will enter the off mode. High temperature can be caused by a defective liquid injection system.

Once the cause of the problem is identified and corrected the cutout automatically resets.

NOTE: The microprocessor controller will indicate a fault and must be manually reset before the unit can be placed in the run mode.

Phase Voltage Monitor

Power input problems activates the phase voltage monitor and places the chiller in the standby mode. Input problems can be caused by low voltage, loss of phase, phase imbalance, and phase reversal.

Once the cause of the problem is identified and corrected the cutout automatically resets.

NOTE: The microprocessor controller will indicate a fault and must be manually reset before the unit can be placed in the run mode.

Temperature Control

Fluid temperature control is achieved by activating a refrigeration system, pump, and a tank heater. PID microprocessor algorithms control both the refrigeration system and the heater.

Flow Monitors

Each recirculating channel is equipped with a flow sensor. The flow sensor confirms proper flow returning from your application.

Each channel is also equipped with a water flow transducer to help diagnose facility water flow problems.

Low Level Monitors

There is an analog level switch in each reservoir. When the fluid level drops to 50%, the ADD FLUID lamp illuminates and a warning signal is sent to the tool. If the fluid level should drop to 25%, the LEVEL FAULT lamp illuminates.

Temperature Sensor

A temperature sensor is located in each recirculating process fluid outlet line. Sensor temperature readings are communicated to the tool via the RS-232 communication port.

Accessory Connector

CN1 RS232

Channel A current temperature, output signal target temperature (setpoint), input signal temperature and deviation value input signal.

CN2 RS232

Channel B current temperature, output signal target temperature (setpoint), input signal temperature and deviation value input signal.

CN3

Pin 1	Ch A Start/Stop
Pin 2	Ch A Remote/Local
Pin 3	Ch A Run (LED)
Pin 4	Ch A ALM1 (LED)
Pin 5	Ch A ALM2 (LED)
Pin 6	Ch B Remote/Local
Pin 7	Ch B Run (LED)
Pin 8	Ch B ALM1 (LED)
Pin 9	Ch B ALM2 (LED)
Pin 10	Cn B Start/Stop
Pin 11	Ch A Stop
Pin 12	EMG SW
Pin 13	12VDC RET
Pin 14	Ch A Common
Pin 15	Ch A Ready (LED)
Pin 16	+12VDC
Pin 17	Ch A Remote/Local (LED)
Pin 18	Ch B Common
Pin 19	Ch B Ready (LED)
Pin 29	+12VDC
Pin 21	Ch B Remote/Local (LED)
Pin 22	12VDC RET
Pin 23	Ch B Stop
Pin 24	EMG SW
Pin 25	Not Used

Section VI Maintenance

For personal safety and equipment reliability, the following procedures should only be performed by a qualified technician. Contact our ... Service Department for assistance (see Preface, After-sale Support).

Service Contracts

NESLAB offers on-site Service Contracts that are designed to provide . extended life and minimal down-time for your unit. For more information, contact our Service Department (see Preface, After-sale Support).

Draining

NOTE: The procedure for draining either channel is identical.

Open Channel A or B drain valve located on the rear of the unit.

When the fluid finishes draining close the drain valve. Open the lower rear access panel. Locate and open the secondary drain. (The secondary drain is located just below the opening on the right side for Channel A, left side for Channel B.) The secondary drain removes the last few ounces in the lower part of the heat exchanger into the drip pan.

Close the secondary valve when the draining is complete.

Remove the insulation off the bottom of the filter cannister and then remove the cannister's bottom drain plug.

When draining is complete replace the cannister's O-ring, reinstall the plug and insulation.

Use the following procedure to drain the exchanger's lines and completely drain either channel.

Open Channel A or B drain valve located on the rear of the unit.

After 2 - 3 gallons (8 - 12 liters) have drained, use the channel control system to manually open the solenoid valve.

The drain option is the seventh display on the main menu. (**NOTE:** The **DRAIN?** display appears only if the channel is off, see Section IV.)

With **DRAIN?** displayed press **YES**.

READY will be displayed, press **YES** to open the valves.

DRAINING will be displayed. When draining is complete press **YES** to close the valves. The fluid temperature will be displayed.

Close the drain valve on the rear of the chiller.

When the fluid finishes draining close the drain valve. Open the lower rear access panel and locate and open the secondary drain. (The secondary drain is located just below the opening on the right side for Channel A, left side for Channel B.) The secondary drain removes the last few ounces in the lower part of the heat exchanger into the drip pan.

Close the secondary valve when the draining is complete.

Remove the insulation off the bottom of the filter cannister and then remove the cannister's bottom drain plug.

When draining is complete replace the cannister's O-ring, reinstall the plug and insulation.

Reservoir Cleaning

Periodically inspect the fluid inside the reservoir. If cleaning is necessary, flush the reservoir with a cleaning fluid compatible with the circulating system and the recirculating fluid.

Filter Cartridge Cleaning

If debris is drawn into the system, the filter prevents the material from being drawn into the fluid loop.

Check the pressure drop across the filter assembly. If the drop is greater than 15 PSI, change or clean the filter cartridge.

Drain the reservoir. The drain for each channel is located on the unit's back.

Drain the fluid from the filter by removing the plug on the sump housing.

Reinstall the plug onto the housing. Unscrew the ring nut from the filter head and slide the sump housing down off the head. Empty the remaining fluid from the sump housing and remove the stainless steel filter cartridge.

The stainless steel cartridge can be cleaned by using either ultrasound or rinsing with Galden® or alcohol.

NOTE: If rinsed, ensure the stainless steel filter cartridge is dry before reinstalling.

Replace the O-ring when the housing is reinstalled.

Reinstall the cannister.

Hand tighten the ring nut and check for leaks.

Preventive Maintenance

NOTE: Every installation can be different, therefore a preventive maintenance can be established after a series of monthly checks.

Requirement	Monthly	Semiannual	Annual
Filter			
Check and record differential pressure	x		
Clean Filter*		x	
Check fluid level	x		
Fluid sampling		x	
Grease pump motor housing			x
Replace pump gears			x
Clean case vents			x
Clean blower inlet and outlet			x
Check calibration of RTDS			x
Check calibration of cabinet thermocouple			x
Check operation of HTCs			x
Check operation of LPCs and HPCs			x
Check operation of circuit breakers			x
Check operation of door interlocks			x
Check operation of motor overloads			x
Verify LEDs**			x
Check low level fault indication			x

* or of differential pressure exceeds 15 PSI.
**can be done with the controller self test during power up.

Section VII Troubleshooting

Main power is not available to unit

-Check main breaker on rear of chiller
-Check incoming power supply
-Check cable connection in the power box and at your application
-Check door interlock on power box
-Check door interlock on heater box
-Check EMO

Unit fails to enter run mode

-Check microprocessor for fault conditions
-See Failure and Warning Condition Table on page 18

Unit will not circulate fluid

-Check tubing between chiller and application
-Check pump circuit breaker
-Check pump overloads
-Check pressure drop across the filter assembly
-Check for proper fluid level

Inadequate temperature control

-Check compressor circuit breaker
-Check heater circuit breaker
-Check temperature probe
-Check for fluctuating input power
-Check microprocessor for proper calibration
-Check for refrigeration system failure

Control system fails to power up

-Check control breaker on the rear of the unit
-Check incoming power supply
-Check cable connection in the power box and at your application

Section VIII Spare Parts

Critical Spare Parts

NESLAB P/N	Description	Quantity	Replace
008916	Pump	2	C
016618	Filter Housing Gasket	2	A
014704	Fluid Flow Transducer	2	C
008882	Pressure Gauge	4	C
004948	Pressure Relief Valve	2	C
007770	Compressor	2	C
009479	Condenser (Water-Cooled)	2	C
001298	High Pressure Switch	2	C
001299	Low Pressure Switch	2	C
009138	Hot Gas Bypass Valve, ADRP-3	2	C
009324	Suction Filter	2	C
009320	Dryer, Liquid Line	2	C
006694	Hot Gas Solenoid Coil, OMKC2	4	C
009478	Hot Gas Solenoid Valve	4	C
009625	Liquid Line Valve	2	C
009182	Liquid Line Solenoid Coil, MKC1	4	C
009626	Liquid Injector Solenoid Valve	2	C
009865	Valve, Crankcase Press. Reg.	2	C
009858	Plate Exchanger	2	C
009857	TXV, R-404A, EMC 12 SZ	2	C
000767	Heater 208V, 5KW	2	C
000598	Level Sensor	2	C
059349	Controller Assembly	2	C
001821	RTD, 6"	2	C
001822	RTD, 1.5"	2	C
001996	Motor Overload Relay, 5 - 8 Amp	2	C
000766	HTC 160, Manual Reset	2	C
000765	HTC 200, Manual Reset	2	C
010413	SSR, 10A, 3-32VDC	2	C
000424	SSR 2.5A, 3-32DC	4	C
006987	SSR 40A, 3-32DC	4	C
024570	Transformer 208/24V, 350VA	1	C
000353	Fuse 2A 600V KTK-2	3	C
010882	Fuse 2A 250V FLM	5	C
010855	Fuse 1A 250V FLMS		C
006069*	Fuse 15A 250V FNM	1	C
004524	Water Flow Transducer	2	C
009144	Valve, Water Press. Reg.	2	C
008894	Gear Kit	2	B

Replacement Codes:

A - Less than 1 (one) year

B - 1 (one) year or more

C - Parts may be replaced due to trouble or loss

*Unit comes with two spare fuses located in the bottom of the power box

Common Spare Parts

NESLAB P/N	Description	Quantity	Replace
011914	Tank Assembly	2	C
008362	Filter Housing	2	C
008371	Stainless Steel 20 Micron Filter	2	C
004940	Check Valve, Tank Vacuum Relief, 1/3 PSI	2	C
004939	Check Valve, Tank Pressure Relief, 10 PSI	2	C
003711	Secondary Drain Valve	2	C
009304	Accumulator	2	C
009604	Sightglass	2	C
004936	Check Valve, 3/4 FNPT	2	C
004938	Fluid Solenoid Valve/Coil	2	C
000410	Lamp, Power Indicator	1	C
001946	Buzzer	2	C
005755	Switch, 2 Position, Selector	2	C
000427	12VDC Power Supply (85-264VAC)	1	C
005792	24V Isolation Transformer, 10VA	2	C
006129	Safety Interlock Switch	3	C
006587	DPDT 7A, 250V Relay	2	C
000656	Blower	1	C
001322	Relay PM SPDT 5A 200-280V	1	C
000641	Relay 12VDC SPDT	10	C
000605	Circuit Breaker, 16AMP GFI	1	C
005807	Circuit Breaker, 30AMP	2	C
005808	Circuit Breaker, 20AMP	2	C
005810	Circuit Breaker, 10AMP	2	C
005919	Circuit Breaker, 3P, 15AMP	2	C
024963	Circuit Breaker, 63AMP GFI	1	C
005815	Connector, 30A, 3 Phase	6	C
000845	Drain Valve	2	C

Replacement Codes:

A - Less than 1 (one) year

B - 1 (one) year or more

C - Parts may be replaced due to trouble or loss

*Unit comes with two spare fuses located in the bottom of the power box

Section IX Diagrams

Flow Diagram

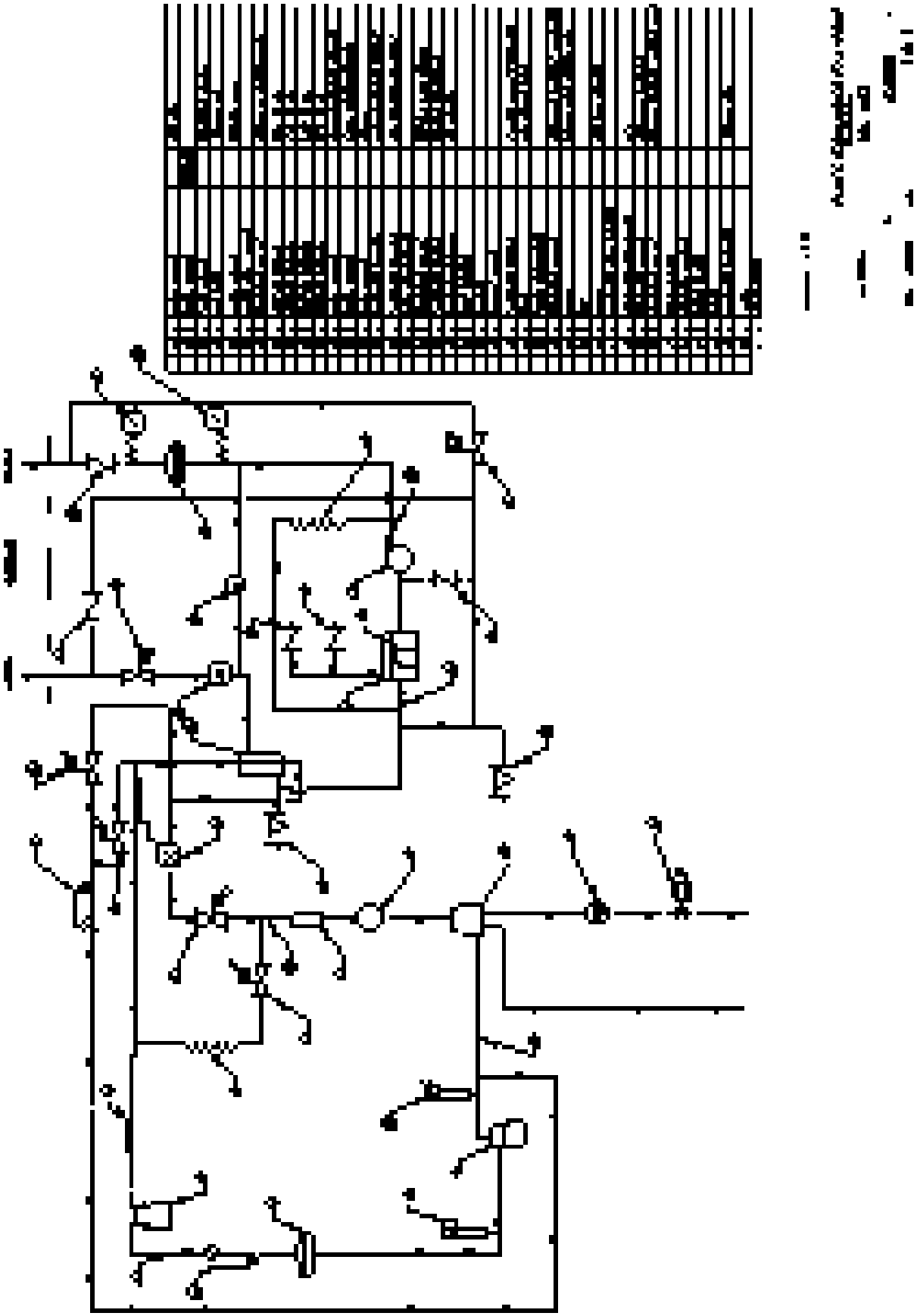

HX-1000 & HX-2000
Recirculating Chiller
TC-400 Controller

Thermo Thermo NESLAB Manual P/N U00413
Rev. 05/09/00

Instruction and Site Preparation Manual

HX-1000 & HX-2000 Recirculating Chiller

Table of Contents

Preface

Compliance 2
Unpacking 2
Lift Points 2
Pre-Start Up 3
Warranty 3
After-Sale Support 3

SECTION I
Safety

Warnings 4

SECTION II
General Information

Description 5
Specifications 5

SECTION III
Installation

Site 7
Pre-Start Up 8
Electrical Requirements 8
Electrical Connections 9
Remote Electrical Connections 10
Plumbing Requirements 11
Fluid 12
Filling Requirements 13

SECTION IV
Operation

Start Up 15
Shut Down 16
Unit Controller 16
Status LEDs 17
Changing a Value 18
Controller Displays 19
Remote Operation 21
Flow Rate 22
High and Low Temperature Cutout 22
High and Low Pressure Cutout 22
Phase Rotation & Voltage Monitor Device 22
Oil Pressure Cutout 23

SECTION V
Safety Features

Safety Features 24
Low Fluid Level 24
Pump 24
Refrigeration 24

SECTION VI
Maintenance

Service Contracts 25
Displaying Software Version 25
Compressor Oil 25
Cleaning 25
Refrigeration Data 25
Parts List 26

Preface

Compliance

Products tested and found to be in compliance with the requirements defined in the EMC standards defined by 89/336/EEC as well as Low Voltage Directive (LVD) 73/23/EEC can be identified by the CE label on the rear of the unit. The testing has demonstrated compliance with the following directives:

LVD, 73/23/EEC	Complies with UL 3101-1:93
EMC, 89/336/EEC	EN 55011, Class A Verification
	EN 50082-1:1992
	IEC 1000-4-2:1995
	IEC 1000-4-3:1994
	IEC 1000-4-4:1995

For any additional information refer to the Letter of Compliance that shipped with the unit (Declaration of Conformity).

Unpacking

Retain all cartons and packing material until the unit is operated and found to be in good condition. If the unit shows external or internal damage, or does not operate properly, contact the transportation company and file a damage claim. Under ICC regulations, this is your responsibility.

Units sold in North America are shipped on a wooden pallet and wrapped in protective plastic. Do not remove the banding or protective plastic until the unit is in its final location.

Units sold outside North America are shipped in a wooden crate. Do not disassemble the crate until the unit is in its final location.

The unit is secured to the pallet by lag bolts. HX-1000 units have 10 bolts, HX-2000 units have 12. Remove the lag bolts and the pallet before placing the unit on the foundation.

Lift Points

The unit is constructed on 4 inch (10.16 centimeter) high feet, each made of 14 gauge steel. HX-1000 units have 6 feet, HX-2000 units have 8. The unit construction provides a 4 inch clearance from the ground. Use a fork lift truck to lift and move the unit. Insert the forks as shown.

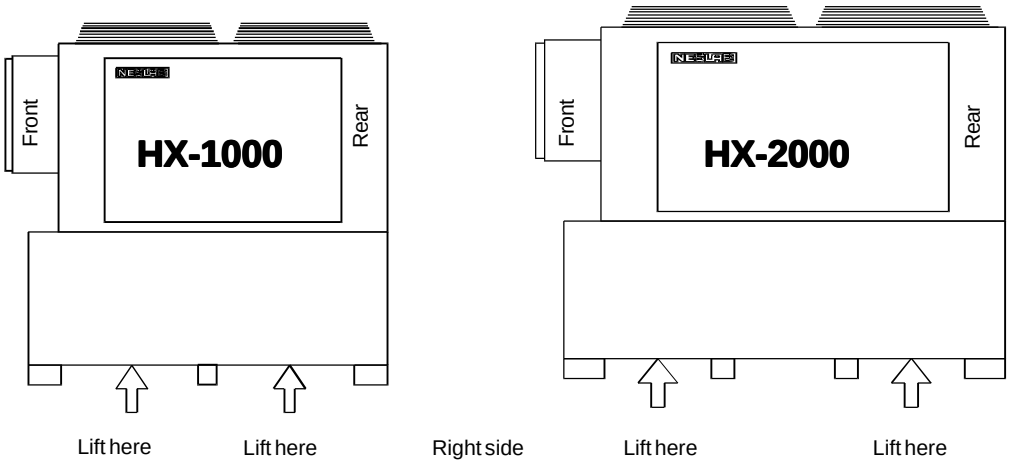

Pre-Start Up

Remove the panels to access the compressor area.

Loosen the four compressor mounting nuts until there is approximately 1/8" clearance between each compression mounting foot and the shipping bracket. This allows the compressor to "float" on the mounting rings.

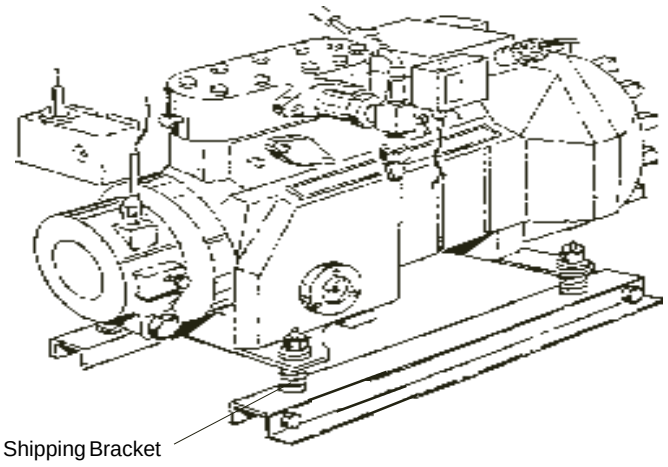

To avoid damage to the compressor, tighten the mounting nuts before moving the unit.

Warranty

The unit has a warranty against defective parts and workmanship is for one full year from date of shipment. See back page for more details.

After-Sale Support

Thermo NESLAB is committed to customer service both during and after the sale. If you have questions concerning the operation of your unit, please contact our Sales Department. If your unit fails to operate properly, or if you have questions concerning spare parts or Service Contracts, please contact our Customer Service Department.

Before calling, *please* refer to the serial number label in the electrical enclosure to obtain the following information:

- BOM number _____

- Serial number _____

- Software version (see page 25) _____

Section I Safety

Warnings

Make sure you read and understand all instructions and safety precautions listed in this manual before installing or operating your unit. If you have any questions concerning the operation of your unit or the information in this manual, contact our Sales Department.

Transport the unit with care. Sudden jolts or drops can damage the refrigeration lines.

Never operate the unit without cooling fluid.

Observe all warning labels.

Never remove warning labels.

Never operate damaged or leaking equipment.

Always turn off the unit and disconnect from the line cord before performing any service or maintenance procedures.

Never operate equipment with damaged line cords.

In addition to the safety warnings listed above, warnings are posted through out the manual. These warnings are designated by an exclamation mark inside an equilateral triangle with test highlighted in bold. Read and follow these important instructions. Failure to observe these instructions can result in permanent damage to the unit, significant property damage, or personal injury or death.

Section II General Information

Description

Your HX Recirculating Chiller is designed to provide a continuous flow of cooling fluid at a constant temperature and pressure.

The unit consists of a reservoir, circulating pump, air-cooled refrigeration system, and a digital temperature controller. The unit can run from a remote monitoring/controlling device.

The unit is designed for all-weather use. This allows heat produced by the instrument being cooled to be discharged outdoors. The high capacity pump allows the unit to be located a great distance from the instrument being cooled. The pump flow is adjustable at the unit.

Specifications

Cooling Capacity

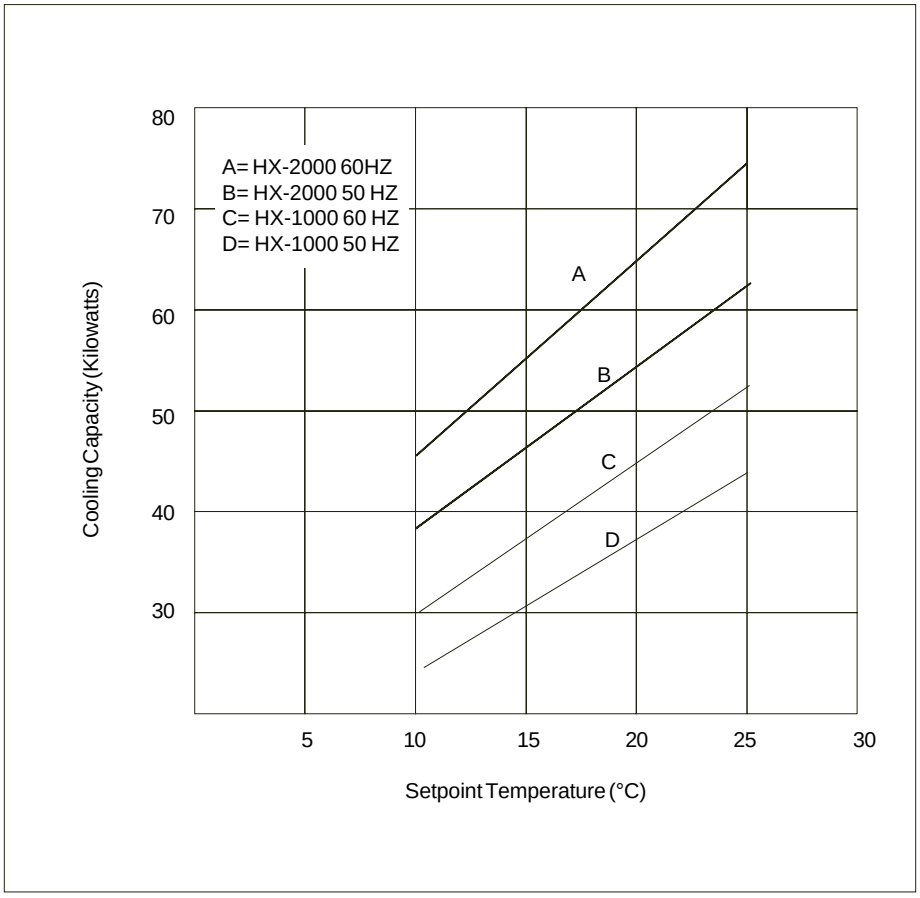

Temperature Range	+10°C to +25°C
Temperature Stability[1]	±1.0°C
Pump Capacity	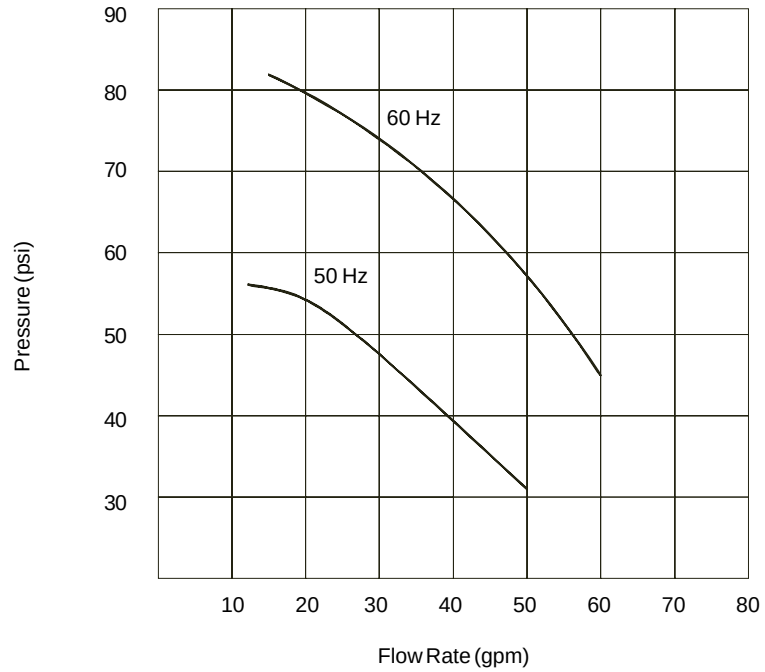

	HX-1000	**HX-2000**
Compressor	10 hp	20 hp
Dimensions (H x W x D)		
Inches	73½ X 58 X 30	76 x 67¼ x 34
Centimeters	186.7 x 147.3 x 76.2	193.0 X 170.8 X 86.4
Shipping Weight		
Pounds	1612	2061
Kilograms	731	945

1. Specifications listed for units under full load circulating at 25°C, ambient 21°C, with 50% water and 50% Ethylene Glycol as coolant. Specifications will be affected by changes in temperature, ambient, or fluids. Specifications subject to change.

Section III Installation

Site

Install the unit on a well-constructed level surface, able to withstand a distributed load of 3000 pounds (1360 kilograms) for HX-2000 units, 1700 pounds (770 kilograms) for HX-1000 units.

The unit has an air-cooled refrigeration system. Air is drawn through the slotted metal grilles on either side of the unit, and exhausted through the fans on top of the unit. Air flow through the fans is 12300 feet^3/minute for HX-2000 units, 6500 feet^3/minute for HX-1000 units.

The unit should be placed in an area where the air intake and discharge are not impeded. A minimum clearance of 3.5 feet (1 meter) on all four sides and 7 feet (2 meters) above the unit is necessary for adequate air flow and easy access to the side panels for service and maintenance.

The ambient range of the unit is -10°F to +110°F (-22°C to +43°C).

NOTE: If the chiller is subject to high-ambient temperatures (above 100°F), Thermo Thermo NESLAB recommends providing it as much shade as possible. High-ambient temperatures and direct sunlight can generate high-refrigerant pressures capable of shutting down the unit.

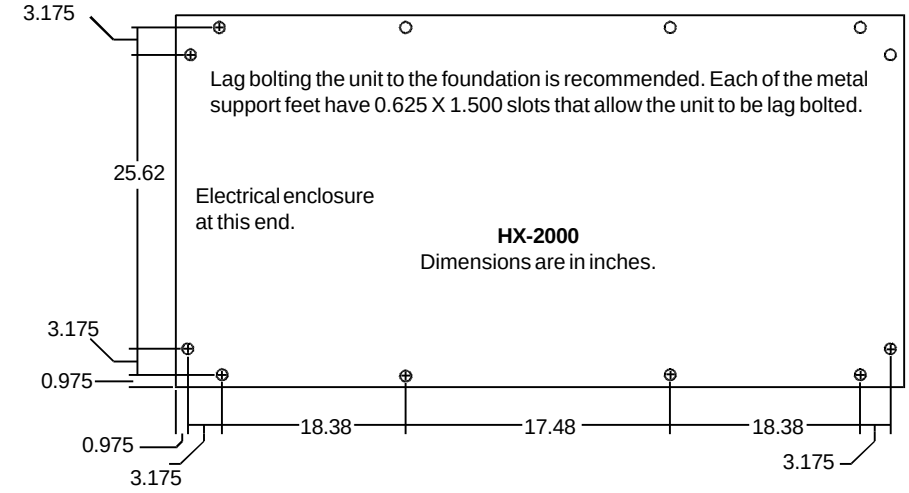

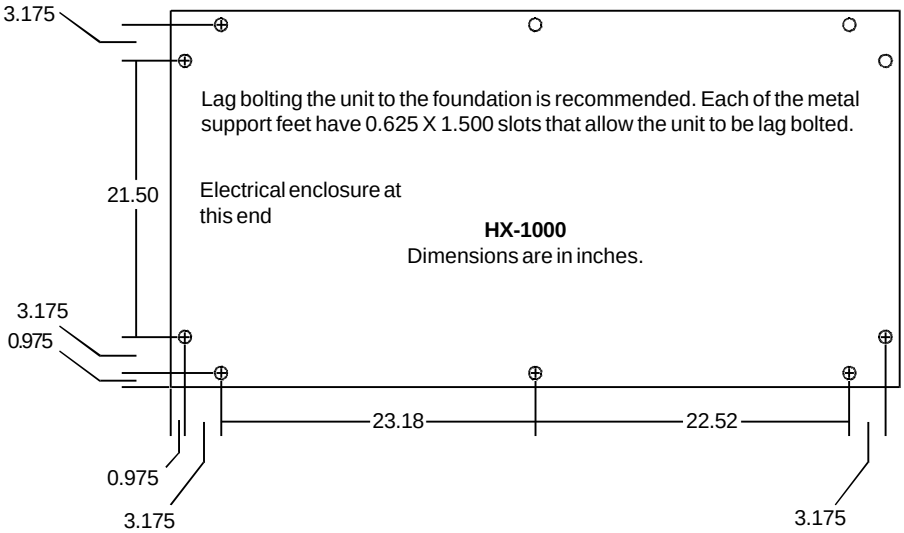

Pre-Start Up

Remove the two side access panels and the rear access panel (opposite end from the electrical enclosure) to access the compressor area. Check the compressor oil level through the sight glass on the compressor crankcase. It is identified as the glass port hole in the compressor wall. The oil level should be no less than ½ full. If the oil is below ½, contact Thermo Thermo NESLAB Service.

Check the refrigerant sightglass. If the dot in the middle of the sightglass is green, the refrigerant is normal. If the dot is yellow, the refrigerant is contaminated. Contact our Service Department for assistance.

Close the COOLING WATER INLET and OUTLET by turning the valve handles fully clockwise.

Make sure the grilles on the sides of the unit (covering condensers) and the fans on the top of the unit are free of obstructions.

After all electrical and plumbing connections have been completed, close the enclosure door and secure the door latch arm (disconnect).

The unit is equipped with a set of valves on the tank inlet and outlet which prevent the tank from overflowing when the pump is off.

The unit has an automatic compressor crankcase heater. The crankcase heater warms the oil in the compressor and prevents refrigerant and the crankcase oil from mixing. Before initial start up, or after storage, the unit must be connected to the power source for at least 12 hours before turning the unit on. This will allow time for the crankcase oil to be heated and the refrigerant to separate from the oil.

For HX-2000 units, apply power to the unit for a minimum of three minutes before starting. This allows the compressor motor overload timer to complete cycling. If the START button is pressed too early, the compressor will not start until the timer has finished its cycle. On some units this may trigger a compressor fault and a shutdown cycle. In this case, wait approximately another three minutes then clear all alarms. Restart the unit.

Electrical Requirements

Refer to the serial number label on the inside of the electrical enclosure for the specific electrical requirements of your unit. Also on the inside of the enclosure, ensure the voltage setting on the phase monitor voltage arrow is correct.

Electrical Connections

For personal safety and equipment reliability, this procedure should be performed by a qualified service technician familiar with the safety procedures required for working inside an energized disconnect box.

A unit wiring diagram is located in the document sleeve inside the door of the electrical enclosure. Wire the unit in conformance to local, state and federal electrical codes. Check all wiring to make sure it is properly connected and protected from the elements.

Install a conduit connector in the wall of the electrical enclosure; a hole must be drilled in the enclosure to accommodate the connector. The location of the hole is user-defined; the hole can be drilled in any of the four enclosure wall (except the upper left side wall, where the control panel is located). This allows the power supply to be installed in the enclosure at a point that is convenient for the user.

Use four-wire cable to connect the appropriate power supply (see Electrical Requirements) to the main circuit breaker located on the right side of the enclosure. For ground, use the copper terminal board on the bottom of the enclosure. Install a second circuit breaker at the power source. This second circuit breaker prevents exposure to “live” wires during installation.

The door latch arm on the enclosure activates the main disconnect for the power supply to the unit. When the door is closed, the disconnect is engaged when the latch arm is pulled up to the ON position. The POWER ON lamp on the control panel indicates the status of the disconnect.

The five door clamps must be secured for the enclosure to be weather-tight.

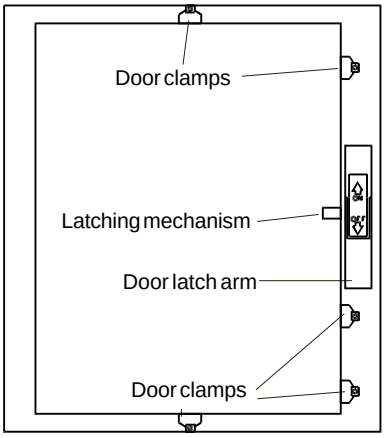

Electrical enclosure (the door has been omitted for clarity)

Remote Box Electrical Connections

For personal safety and equipment reliability, this procedure must be performed by a qualified service technician familiar with the safety procedures required for working inside an energized disconnect box.

Wiring diagrams are located inside the document sleeve inside the electrical enclosure. Wire the unit in conformance to all local, state and federal electrical codes. Check all wiring and make sure it is properly connected and protected from the elements.

Install a conduit connector in the wall of the unit's electrical enclosure. A hole must be drilled in the electrical enclosure to accommodate the connectors. The location of the hole is user-defined; this allows the connecting cable to be installed in the electrical enclosure at a point that is convenient to the user. The hole can be drilled in any of the four enclosure walls.

Wire the connections for the remote box as shown. 2TB is located inside the electrical enclosure, on the left-hand side.

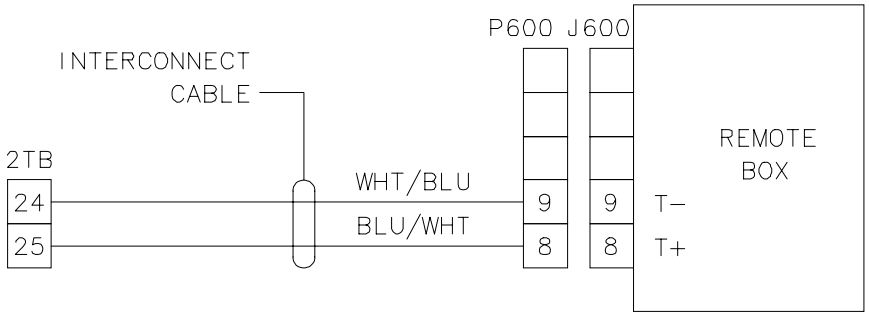

Plumbing Requirements

The inlet and outlet of the unit are labelled COOLING WATER INLET and OUTLET. These connections are 1¼ inch FPT.

Follow good plumbing practices to minimize unnecessary bends and restrictions that will increase the pressure drop through the circulating lines. Refer to Pressure Drop Chart on the next page to estimate the pressure drop through various diameter tube lengths.

Insulate all tubes and fittings to minimize loss of cooling capacity. This is extremely important in areas of ambient extremes or when the unit is located a great distance from the instrument being cooled. All tubing and fittings should be weather resistant, able to endure high and low ambient conditions, and able to withstand a maximum pressure of 120 psi.

Insulating hose is available from Thermo Thermo NESLAB. Contact our Sales Department for more information.

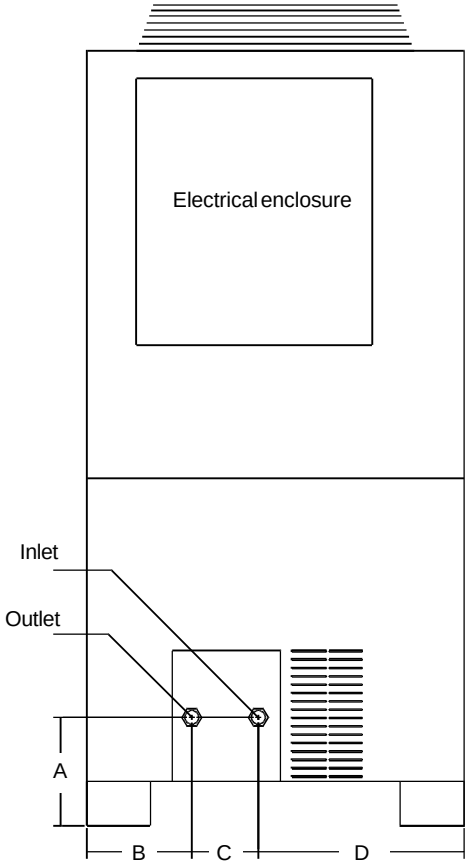

	A	B	C	D
HX-1000	9.375	8.5	5	16.3125
HX-2000	9.375	10.215	5	18.875

Dimensions of the inlet and outlet.
Dimensions are in inches.

Use the Pump Capacity Chart (see Specifications) and the Pressure Drop Chart to calculate the maximum distance you can locate the unit from the system being cooled. Find the point on the Pump Capacity Chart that matches the flow and pressure requirements of the system being cooled. From that point, estimate the pressure difference between the pump performance line, and the point you have chosen on the graph. This net pressure value, used with the Pressure Drop Chart, will help determine the maximum distance from the chiller to the system being cooled and the tubing diameter (ID).

NOTE: The unit is equipped with a set of valves on the tank inlet and outlet which prevent the tank from overflowing when the pump is off.

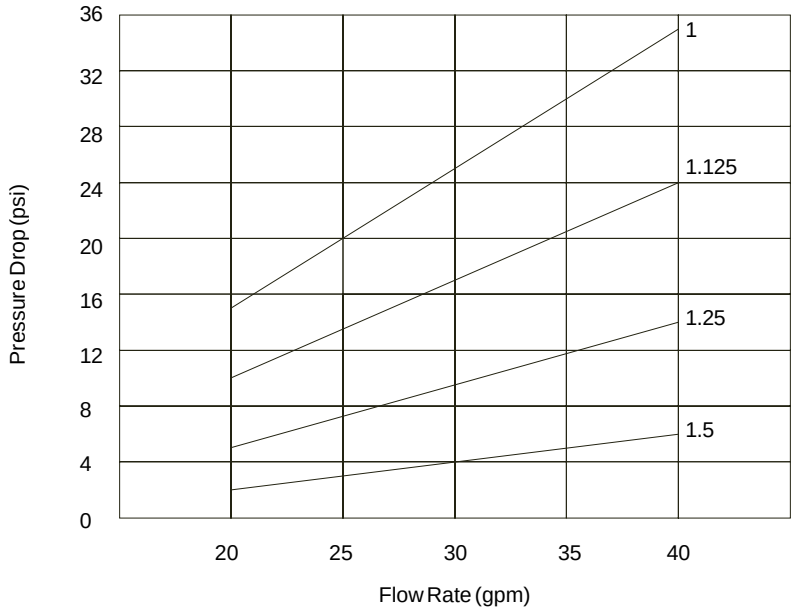

Material: 100 feet copper tubing. Dimensions are inside diameter (ID), measured in inches.

Fluid

A non-freezing fluid is required for operation at any recirculating or ambient temperature. The selected fluid must have a viscosity of 50 centistokes or less at the lowest operating temperature.

Due to the physical nature of a plate heat exchanger, and its response to temperature changes, 100% water must not be used as a circulating fluid. Using 100% water may cause the plate heat exchanger to rupture.

Never use corrosive or flammable fluids with this unit.

Never use automotive antifreeze. Commercial antifreeze contains silicates that can cause permanent damage to the pump seals.

Noncompliance with the statements in the section can result in damage to the unit and will void the manufacturer's warranty. For more information contact our Sales Department (see Preface, After-sale Support).

The wetted parts are:

- *Stainless steel*
- *Bronze*
- *Brass*
- *Copper*
- *PVC Plastic*

Filling Requirements

Ensure the INLET and OUTLET valves on the front of the outside of the unit are closed.

Open the unit's lower-right hand side panel and locate the 1¼" suction gate valve. (It is the largest valve in the unit and is located between the reservoir and compressor.)

Ensure the suction gate valve is fully closed.

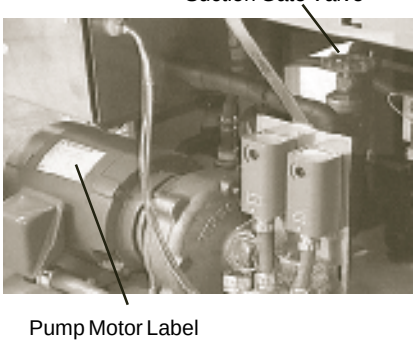

The unit is equipped with a low flow cutout. While filling the unit it is important to ensure that the cutout senses a minimum of 10 gpm through the return line, and that the reservoir does not run dry.

Running the reservoir dry may permanently damage the pump seals.

Three possible options for filling the lines without running the reservoir dry or causing the unit to cut out on low flow are:

Option #1

1. Connect the INLET/OUTLET recirculation lines from the HX to your application.
2. Pre-fill the circulation lines with the appropriate mixture of a non-freezing fluid.
3. Remove the reservoir cover located under the electrical enclosure. Fill the reservoir approximately ¾ full. Start the unit and allow it to run 15 - 20 minutes.
4. Slowly open the OUTLET valve. **Opening the valve too quickly will cause water-hammering.**
5. Keep the reservoir topped off to within one inch of the top. (There could be some substantial splashing from the reservoir as air is purged from the lines.)
6. Your application may be started at this time.
7. As the recirculation lines continue to fill, keep topping off the reservoir.
8. When the reservoir no longer needs additional fluid, fully open the suction gate valve.
9. Allow the unit to run 10 to 15 minutes to purge any remaining air.
10. Ensure the reservoir is filled to within one inch of the top.
11. Close the reservoir cover.
12. Install the unit's lower right-hand side panel.

Option # 2

Refer to the diagram below and install a bypass assembly with two ball-valves and a flow meter in the circulation lines.

1. Ensure both ball-valves are closed.

2. Remove the reservoir cover located under the electrical enclosure. Fill the reservoir approximately ¾ full. Start the unit and allow it to run 15-20 minutes.

3. Slowly open the OUTLET valve. **Opening the valve too quickly will cause water-hammering.**

4. Slowly open the bypass ball-valve so the flow on the return line is 20 gpm.

5. Slowly open the supply line ball-valve. A reservoir fluid loss will occur as the lines start to fill, continually fill the reservoir as the fluid level drops. Open the supply line ball-valve to a point where there is enough flow to fill the lines in a reasonable amount of time, and at a flow rate equal to the ability to replenish the reservoir fluid. **If the flow drops below 10 gpm the low-flow cutout will trip.**

6. Ensure all the circulation lines are full and free of air, and that the reservoir is filled to within 1 inch of the top. If desired, calculate the total amount of fluid required to fill the lines and stop filling when that amount is consumed. It will take some time to bleed air from the system.

7. Your application may be started at this time.

8. Fully open the supply line ball-valve.

9. Slowly close the bypass ball-valve. Ensure the flow rate does not drop below 10 gpm.

10. When the reservoir no longer needs additional fluid, fully open the suction gate valve.

11. Close the reservoir cover.

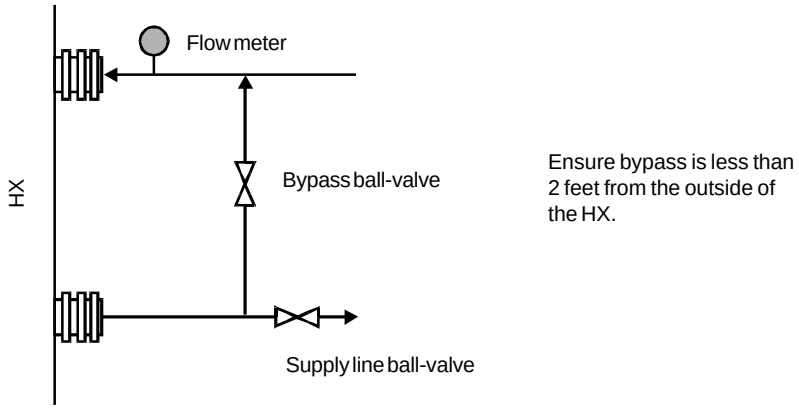

12. Install the unit's lower right-hand side panel.

Option 3

Arrange for a Thermo Thermo NESLAB service technician to be on-site in order to perform and installation inspection and assist with starting the unit.

Section IV Operation

Start Up

Ensure the door latch arm (disconnect) has been on with the POWER ON lamp lit for at least 12 hours. This will allow time for the crankcase oil to be heated and the refrigerant to separate from the oil.

Review the filling requirements given on the previous page.

Partially open the COOLING WATER INLET and OUTLET by turning the valve handles counterclockwise.

Turn the MACHINE OFF/ON switch to the ON position. The MACHINE ON lamp will light. Press the START button. The display will flash STARTING for approximately two minutes.

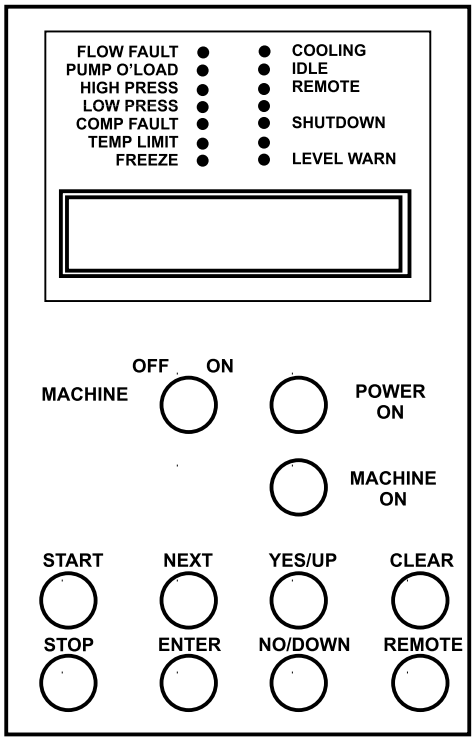

NOTE: For HX-2000 units, leave the MACHINE ON/OFF switch in the ON position for a minimum of three minutes before starting. This allows the compressor motor overload timer to complete cycling. If the START button is pressed too early, the compressor will not start until the timer has finished its cycle. On some units this may trigger a COMPRESSOR FAULT and a SHUTDOWN cycle. In this case, wait approximately another three minutes then CLEAR all alarms.

NOTE: On starting, if the reservoir fluid temperature is outside the unit's temperature range the unit will run but the TEMP LIMIT LED will flash until the fluid temperature is within the limits.

Shut Down

When the unit is manually shut down using the STOP button, a time delay is activated that allows the refrigeration system and the pump to continue to operate. The system will run in the shutdown mode for 30 seconds. This additional run time allows all refrigerant to be removed from the heat exchanger and for the heat exchanger to warm up.

NOTE: The unit is equipped with a set of valves on the tank inlet and outlet designed to prevent the tank from overflowing when the pump is off.

Shutting the unit off using the MACHINE OFF button, a circuit breaker or other device on the line side of the relay will defeat the purpose of the off cycle and is not recommended. Implement remote on/off control through the controller's serial port.

Unit Controller

MACHINE ON
Energizes the control circuits in preparation for operation.

MACHINE OFF
Immediately de-energizes the control circuits. Do not use this button for normal on/off control, use the STOP button. MACHINE OFF will stop all motors immediately and defeat the normal shut down sequence.

START
Starts the pump, compressor, and heater.

STOP
Initiates shut down sequence.

NEXT
Scrolls through the menus.

ENTER
Confirms entry of numeric values.

YES
Answers Yes to Y/N questions, increments numerical values.

NO
Answers NO to Y/N questions, decrements numerical values.

CLEAR
Clears alarm indications after fault condition has been corrected. Alarm LEDs will remain lit after problem is eliminated to provide indication of problem cause. CLEAR removes these indicators, see Corrective Action on the next page.

REMOTE
Toggles the unit between local and remote operation.

Status LEDs

LED	Indication	Response	Corrective Action
FLOW FAULT	Flow through heat exchanger is low. Pressure drop across exchanger too high (blocked) or flow rate is too low.	Pump and refrigeration stops.	Check recirculating system for flow blocked, frozen exchanger. Press CLEAR, START.
PUMP O'LOAD	Pump motor overload. Overload protector tripped.	Pump and refrigeration stops.	Check supply voltage, pump bearings. Reset motor protector, press CLEAR, START.
HIGH PRESS	Refrigeration high pressure condition. High pressure switch opened.	Refrigeration stops.	Check condenser air flow, dirty condenser. Press CLEAR, START.
LOW PRESS	Refrigeration low pressure condition. Low pressure switch open.	Refrigeration stops.	Check control malfunction, refrigerant leak. Press CLEAR, START.
COMP FAULT	Compressor oil pressure low or motor overload. Oil pressure switch open, motor overload protector trips.	Refrigeration stops.	Check oil sight glass, line voltage. Reset oil pressure switch, press CLEAR, START.
TEMP LIMIT	Temperature has exceed high or low limit settings. Measured temperature is abnormal. The LED may flash during start up, this is normal.	Pump and refrigeration stops.	Check measurement and control systems. LED goes out when temperature is within limits.
FREEZE	Flow through heat exchanger is low and pressure is increasing.	Unit shuts down.	Check fluid mixture for optimum freeze point.
COOLING	Refrigeration active.	Normal operation.	NA
IDLE	Heating active.	Normal Operation.	NA

LED	Indication	Response	Corrective Action
REMOTE	Remote control is selected. Normal operation.	Unit uses remote commands, settings.	NA. Press REMOTE to cancel.
SHUTDOWN	System is in shutdown sequence. Normal operation, motors will stop after ~30 seconds.	Normal shutdown sequence.	NA.
LEVEL WARN	Fluid level is low. Reservoir upper level switch is open.	Normally, pump and refrigeration stops. Unit can be configured to keep running.	Fill reservoir.

Changing a Value

The **YES** key increments the value. The **NO** key decrements the value.

The display will flash as soon as either key is depressed, and will continue to flash until the **ENTER** key is pressed to accept the new value.

The new value will not be used by the controller until the **ENTER** key is depressed and the display stops flashing.

If the **NEXT** key is pressed while the value is flashing, the new value will not be accepted. The display will stop flashing and the original value will be displayed. In this case the **NEXT** key can be used to abort data entry. The display will not sequence unless the **NEXT** key is depress again.

For large values the display can be changed by manipulating the individual digits. Press the **YES** key and the **NO** key at the same time. The most significant digit will start to flash. The **YES** key increments or the **NO** key decrements the digit. Press the **ENTER** key to accept the digit and to move to the next most significant digit. Repeat until all digits are entered. Pressing the **NEXT** key before all digit are entered will abort the procedure and return the display to the original value.

The controller will not allow you to enter a value above the maximum (+40°C) or below the minimum (0°C). If you try to enter an illegal value outside the operating range, the display will revert to its original value.

Controller Displays

An alphanumeric display presents numeric readings of various operating conditions within the chiller. Display function is selected by pressing the appropriate keys to move through a menu of available information.

Operator's Loop

When the controller is first powered it goes through a short self-test and then enters the Operator's Loop, displaying the reservoir fluid temperature.

By pressing the NEXT key the controller will step through the menu shown below.

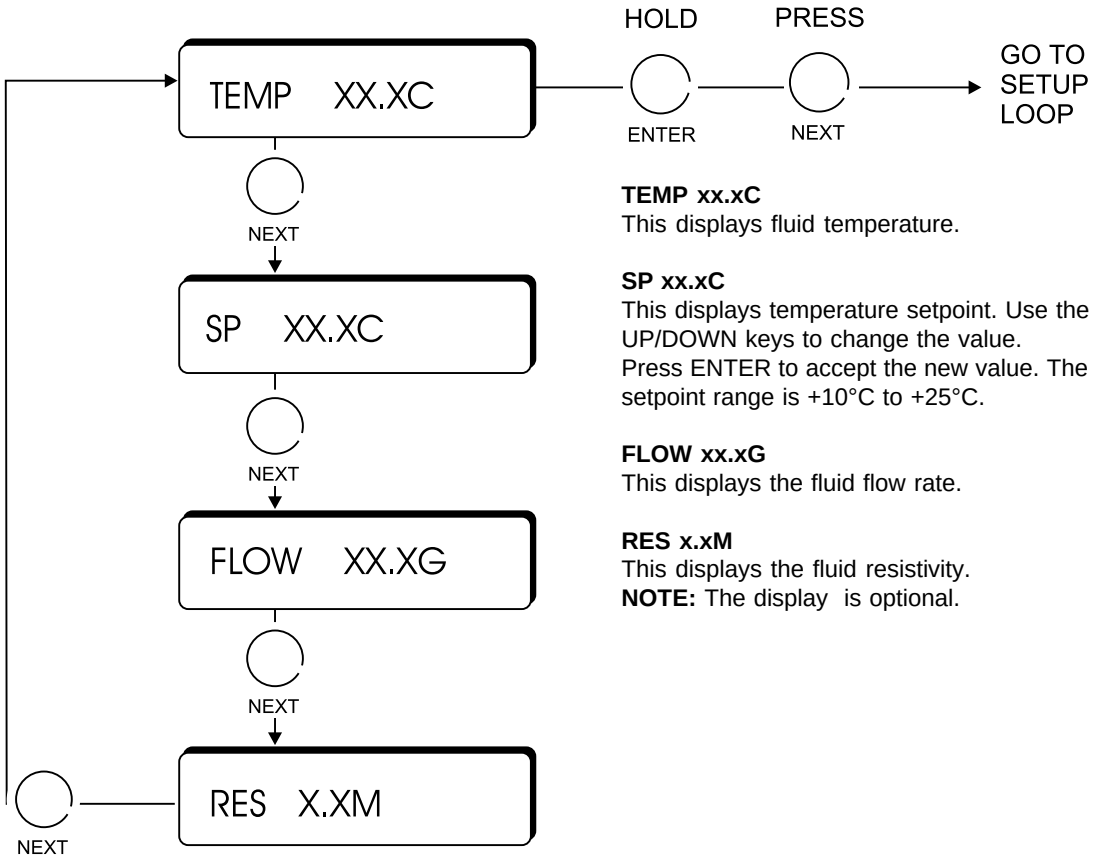

TEMP xx.xC
This displays fluid temperature.

SP xx.xC
This displays temperature setpoint. Use the UP/DOWN keys to change the value. Press ENTER to accept the new value. The setpoint range is +10°C to +25°C.

FLOW xx.xG
This displays the fluid flow rate.

RES x.xM
This displays the fluid resistivity.
NOTE: The display is optional.

Figure 1 Operator's Loop

Setup Loop

The Setup Loop allows the operator to change the temperature fault setpoints, low flow rate (10 GPM minimum), the controller's COOL PID parameters, and to select a low level condition to act as a fault or warning. **NOTE:** Thermo Thermo NESLAB recommends configuring the unit to fault; after a power lose the unit will automatically default to the fault mode.

To enter this loop you must be in the Operator's Loop and displaying the reservoir fluid temperature. Depress and hold the ENTER key then press NEXT. Adjust values with the UP and DOWN keys. Press ENTER for the controller to accept each new entry.

NOTE: Should you desire to return to the supply line temperature display and abort any changes, keep pressing the NEXT until the display reads **SAVE?** then press NO**.**

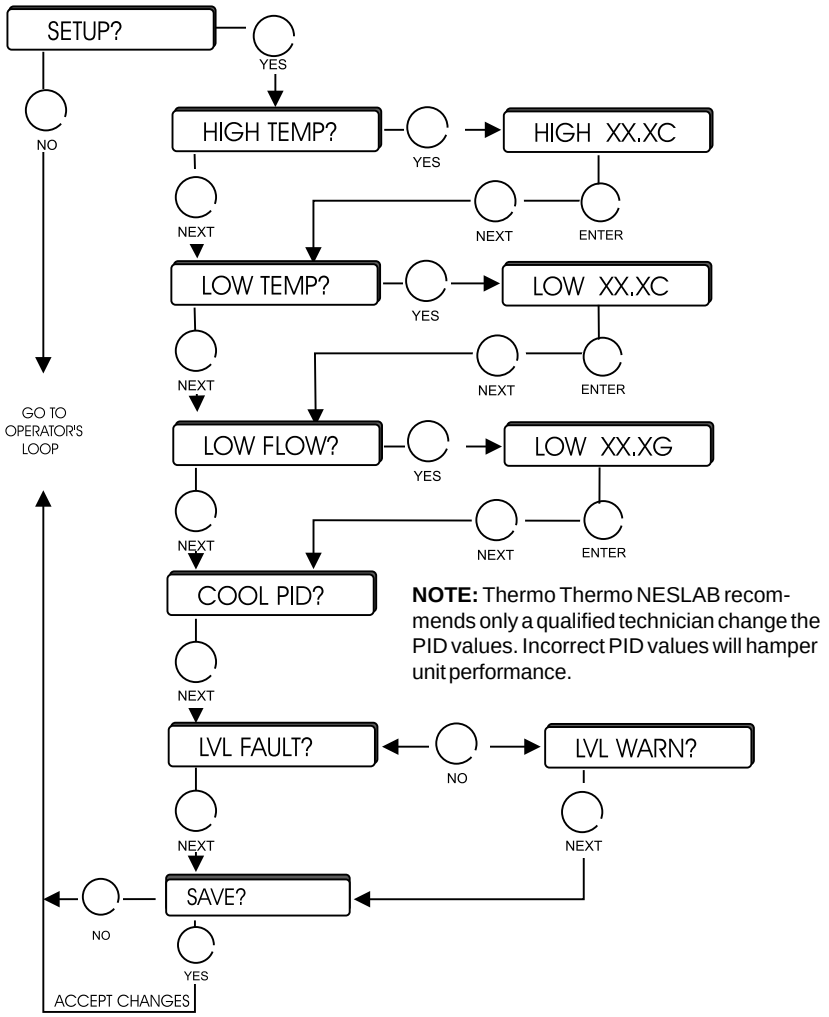

Figure 2 Setup Loop

Remote Operation

Follow the safety precautions and installation procedures outlined in Electrical Connections for the proper remote box installation instructions.

To start the unit the MACHINE ON lamp must be energized.

To operate using the remote box press the REMOTE button on the local controller. The remote box will momentarily display ####### and then display the current reservoir temperature. ####### indicates that communication is not yet established between the local unit and the remote box. If the ####### display does not extinguish check the connections and then toggle the power to the unit. The REMOTE ENABLED LED on the remote box and the REMOTE LED on the local controller will both illuminate.

NOTE: If you press STOP on the remote box, you cannot re-enable the remote mode from the remote box.

While in the remote mode, the local controller only mirrors the remote controller's display. However, you can use the local controller to return to the local mode. Press REMOTE, the REMOTE LED will turn off.

The remote box also has a 15-pin connector for standard 10mV/°C temperature output (between pin 7 and referenced to pin 6). It can be used for a chart recorder or other recording device. An optional 0 - 10VDC signal is available.

Configuration

The remote box can be configured for 110V or 220V operation. The voltage is displayed on the power inlet module located on the rear of the remote box. To change the voltage pry the module out from the power connection. Remove the voltage plug from the module and rotate it 180°. Reinstall the plug. The desired voltage should be displayed. Reinstall the inlet module.

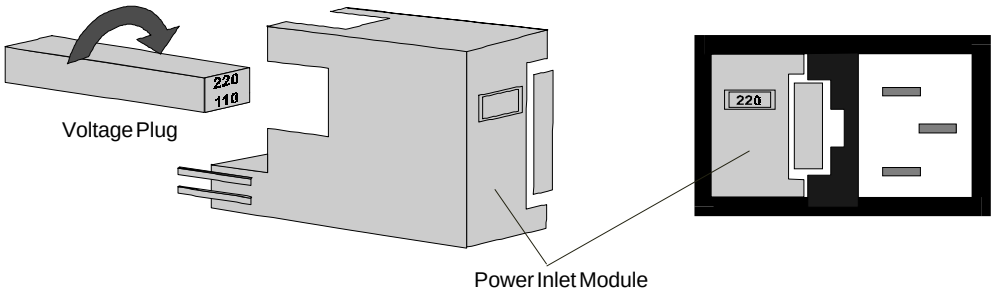

Flow Rate

Adjust the flow rate to the system being cooled by turning the COOLING WATER OUTLET valve. Use a flow meter on the COOLING WATER OUTLET to adjust the desired flow rate.

High and Low Temperature Cutout

The High and Low Temperature Cutouts (HTC/LTC) monitor the cooling fluid temperature as it exits the heat exchanger. They prevent the cooling fluid from reaching excessively high or low temperatures that can damage the unit.

In the event of a high temperature fault, the TEMP LIMIT LED will illuminate, and the unit will enter the shut down mode. The unit will remain off and must be manually restarted.

In the event of a low temperature fault, the TEMP LIMIT LED will illuminate and the compressor will shut down. The compressor will remain off until the cooling fluid temperature rises above the cut off point.

The HTC is set at +80°F (+27°C). The LTC is set at +25°F (-6°C). If adjustments are needed, contact our Customer Service Department for assistance.

High and Low Pressure Cutout

The High and Low Pressure Cutouts (HPC/LPC) monitor the refrigeration pressure at the compressor. They prevent excessively high or low pressures that can damage the unit. In the event of a high pressure fault, the HIGH PRESS LED will illuminate and the unit will enter the shut down mode until the refrigeration pressure drops below the cut in point.

During a low pressure fault, the LOW PRESS LED will illuminate and the compressor and discharge fans shut down until the refrigeration pressure rises above the cut in point.

When either condition is identified and corrected, press the CLEAR key before restarting the unit.

Phase Rotation & Voltage Monitor Device

If the POWER ON light is on but the MACHINE ON light is not when the MACHINE ON button is pressed, the input power phase rotation is reversed. This condition may occur at installation. If rotation is reversed, remove power, swap any two line leads at the power entry and then restore power. This should correct a rotation fault.

NOTE: With the POWER ON lamp lit, if the red light on the phase voltage monitor located in the electrical enclosure is also lit, the phase rotation is correct.

Oil Pressure Cutout

In the event of low compressor oil pressure, the Oil Pressure Cutout will shut down the compressor and the discharge fans.

After the failure has been corrected, the cut out must be reset. Push the Oil Pressure Cutout Reset button located next to the compressor.

Press the CLEAR button before restarting the unit.

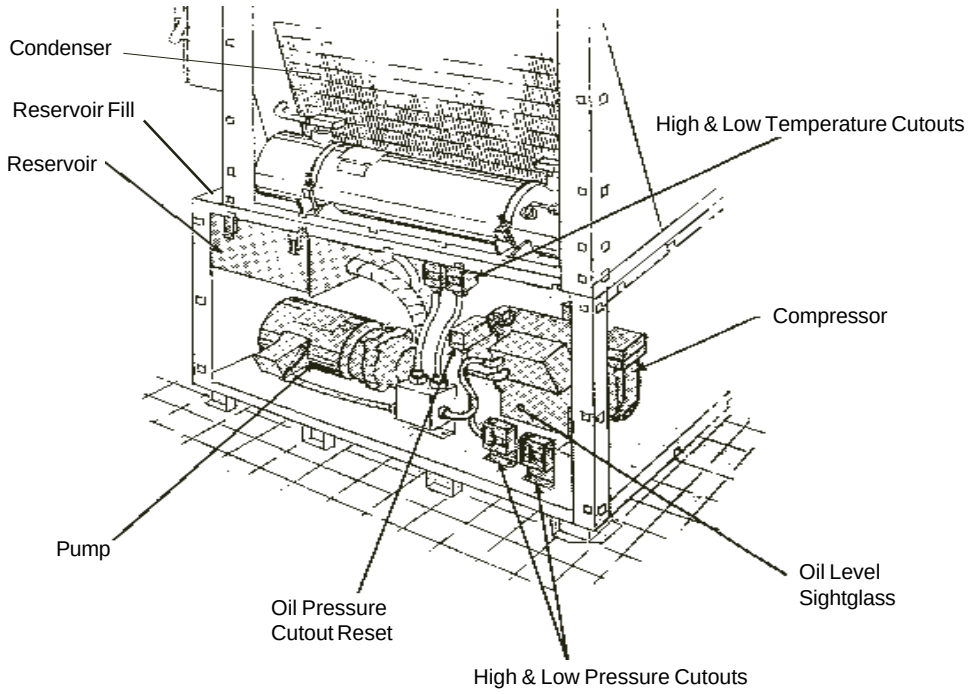

NOTE: Refrigerant sightglass is located on the other side of the unit (opposite to the compressor).

Section VI Safety Features

Safety Features

The unit is equipped with the following safety features designed to protect the unit in case of failure. LED lamps are mounted on the control panel on the electrical enclosure, and indicate operational status.

Low Fluid Level

The low fluid level monitor is connected to a float switch in the reservoir. If the reservoir level drops below a safe operating level, the LEVEL WARN LED will light. The unit's reaction will depend on how it is configured in the Setup Loop.

Pump

In the event of any of the following conditions, the PUMP O'LOAD LED will illuminate and the unit will shut down. The failure must be identified and corrected before the unit can be restarted.

- Loss of circulating flow, in the event of pump failure or ruptured pump lines.

- Pump motor thermal overload.

- High cooling fluid temperature (adjustable).

- High refrigeration pressure.

Refrigeration

In the event of any of the following conditions, the COMP FAULT will illuminate and the compressor and discharge fans will shut down. The pump/ circulating system will remain operating until the STOP button is depressed, or until the operating temperature reaches the High Temperature Cutout setting. This allows a temporary supply of cooling fluid to the instrument being cooled until the instrument being cooled can safely be turned off.

- Low compressor oil pressure.

- Low refrigeration pressure.

- Low cooling fluid temperature (adjustable).

- Compressor motor thermal overload.

In the event of any of the following conditions, the COMP FAULT LED will illuminate and the unit will shut down:

- High refrigeration pressure.

- High cooling fluid temperature (adjustable).

If your unit fails to operate properly, contact our Customer Service Department for assistance.

Section VII Maintenance

Service Contracts

Thermo Thermo NESLAB offers on-site Service Contracts that are designed to provide extended life and minimal down time for your unit. For more information, contact our Customer Service Department.

Displaying Software Version

To display the software version ensure the controller is in the Operator's Loop and displaying the reservoir fluid temperature. Depress and hold the ENTER key. Press the YES NO YES keys and the display will indicate CALIBRATE? While continuing to hold the ENTER key press the YES NO YES keys again. The display will now indicate the software version, for example 000550.64B.

Press NO and the display will return to the Operator's Loop.

Compressor Oil

Check the compressor oil level after 24 hours of operation. The minimum oil level is ½ full. If the level is lower, contact our Customer Service Department.

Cleaning

A build up of dust and debris on the condenser can cause a loss of cooling capacity. Periodically clean the condensers by removing the expanded metal grilles and blowing compressed air through the condensers or by hosing them down with water. The frequency of cleaning depends on the operating environment.

Refrigeration Data

Set High pressure switch: cut out 390 psi / cut in 250 psi.
Set Low pressure switch: cut out 5 psi / cut in 40 psi.

Charge unit with R-22 refrigerant as shown in the table. Run unit with recirculating fluid maintained at 27°C. Adjust pressures to conform:

	US measure	**Metric measure**
Amount	75 pounds	34 kg
Hot gas valve	60 PSIG	415 kPa
Suction pressure	68 - 85 PSIG	470 - 586 kPa
Discharge pressure	280 - 320 PSIG	1930 - 2200 kPa
Speed check	not specified	not specified

Hot Gas setting is observed on the suction gauge when the unit is in the heat/idle cycle.

Parts List

Our Customer Service Department can provide you with a complete list of spare parts for your unit. Phone numbers and addresses for all our Thermo Thermo NESLAB Sales Centers are located in the front of this manual (see Preface, After-sale Support). Before calling, *please* obtain the following information:

BOM number

Serial number

Software version

WARRANTY

Thermo NESLAB Instruments, Inc. warrants for 12 months from date of shipment any Thermo NESLAB unit according to the following terms.

Any part of the unit manufactured or supplied by Thermo NESLAB and found in the reasonable judgment of Thermo NESLAB to be defective in material or workmanship will be repaired at an authorized Thermo NESLAB Repair Depot without charge for parts or labor. The unit, including any defective part must be returned to an authorized Thermo NESLAB Repair Depot within the warranty period. The expense of returning the unit to the authorized Thermo NESLAB Repair Depot for warranty service will be paid for by the buyer. Thermo NESLAB's responsibility in respect to warranty claims is limited to performing the required repairs or replacements, and no claim of breach of warranty shall be cause for cancellation or recision of the contract of sales of any unit.With respect to units that qualify for field service repairs, Thermo NESLAB's responsibility is limited to the component parts necessary for the repair and the labor that is required on site to perform the repair. Any travel labor or mileage charges are the financial responsibility of the buyer.

The buyer shall be responsible for any evaluation or warranty service call (including labor charges) if no defects are found with the Thermo NESLAB product.

This warranty does not cover any unit that has been subject to misuse, neglect, or accident. This warranty does not apply to any damage to the unit that is the result of improper installation or maintenance, or to any unit that has been operated or maintained in any way contrary to the operating or maintenance instructions specified in Thermo NESLAB's Instruction and Operation Manual. This warranty does not cover any unit that has been altered or modified so as to change its intended use.

In addition, this warranty does not extend to repairs made by the use of parts, accessories, or fluids which are either incompatible with the unit or adversely affect its operation, performance, or durability.

Thermo NESLAB reserves the right to change or improve the design of any unit without assuming any obligation to modify any unit previously manufactured.

THE FOREGOING EXPRESS WARRANTY IS IN LIEU OF ALL OTHER WARRANTIES, EXPRESSED OR IMPLIED, INCLUDING BUT NOT LIMITED TO WARRANTIES OR MERCHANTABILITY AND FITNESS FOR A PARTICULAR PURPOSE.

Thermo NESLAB'S OBLIGATION UNDER THIS WARRANTY IS STRICTLY AND EXCLUSIVELY LIMITED TO THE REPAIR OR REPLACEMENT OF DEFECTIVE COMPONENT PARTS AND Thermo NESLAB DOES NOT ASSUME OR AUTHORIZE ANYONE TO ASSUME FOR IT ANY OTHER OBLIGATION.

Thermo NESLAB ASSUMES NO RESPONSIBILITY FOR INCIDENTAL, CONSEQUENTIAL, OR OTHER DAMAGES INCLUDING, BUT NOT LIMITED TO LOSS OR DAMAGE TO PROPERTY, LOSS OF PROFITS OR REVENUE, LOSS OF THE UNIT, LOSS OF TIME, OR INCONVENIENCE.

This warranty applies to units sold in the United States. Any units sold elsewhere are warranted by the affiliated marketing company of Thermo NESLAB Instruments, Inc. This warranty and all matters arising pursuant to it shall be governed by the law of the State of New Hampshire, United States. All legal actions brought in relation hereto shall be filed in the appropriate state or federal courts in New Hampshire, unless waived by Thermo NESLAB.

HX-1000 & HX-2000
Recirculating Chiller
TC-400 Controller

Thermo Thermo NESLAB Manual P/N U00413
Rev. 05/09/00

Instruction and Site Preparation Manual

HX-1000 & HX-2000 Recirculating Chiller

Table of Contents

Preface

Compliance 2
Unpacking 2
Lift Points 2
Pre-Start Up 3
Warranty 3
After-Sale Support 3

SECTION I
Safety

Warnings 4

SECTION II
General Information

Description 5
Specifications 5

SECTION III
Installation

Site 7
Pre-Start Up 8
Electrical Requirements 8
Electrical Connections 9
Remote Electrical Connections 10
Plumbing Requirements 11
Fluid 12
Filling Requirements 13

SECTION IV
Operation

Start Up 15
Shut Down 16
Unit Controller 16
Status LEDs 17
Changing a Value 18
Controller Displays 19
Remote Operation 21
Flow Rate 22
High and Low Temperature Cutout 22
High and Low Pressure Cutout 22
Phase Rotation & Voltage Monitor Device 22
Oil Pressure Cutout 23

SECTION V
Safety Features

Safety Features 24
Low Fluid Level 24
Pump 24
Refrigeration 24

SECTION VI
Maintenance

Service Contracts 25
Displaying Software Version 25
Compressor Oil 25
Cleaning 25
Refrigeration Data 25
Parts List 26

Preface

Compliance

Products tested and found to be in compliance with the requirements defined in the EMC standards defined by 89/336/EEC as well as Low Voltage Directive (LVD) 73/23/EEC can be identified by the CE label on the rear of the unit. The testing has demonstrated compliance with the following directives:

LVD, 73/23/EEC	Complies with UL 3101-1:93
EMC, 89/336/EEC	EN 55011, Class A Verification
	EN 50082-1:1992
	IEC 1000-4-2:1995
	IEC 1000-4-3:1994
	IEC 1000-4-4:1995

For any additional information refer to the Letter of Compliance that shipped with the unit (Declaration of Conformity).

Unpacking

Retain all cartons and packing material until the unit is operated and found to be in good condition. If the unit shows external or internal damage, or does not operate properly, contact the transportation company and file a damage claim. Under ICC regulations, this is your responsibility.

Units sold in North America are shipped on a wooden pallet and wrapped in protective plastic. Do not remove the banding or protective plastic until the unit is in its final location.

Units sold outside North America are shipped in a wooden crate. Do not disassemble the crate until the unit is in its final location.

The unit is secured to the pallet by lag bolts. HX-1000 units have 10 bolts, HX-2000 units have 12. Remove the lag bolts and the pallet before placing the unit on the foundation.

Lift Points

The unit is constructed on 4 inch (10.16 centimeter) high feet, each made of 14 gauge steel. HX-1000 units have 6 feet, HX-2000 units have 8. The unit construction provides a 4 inch clearance from the ground. Use a fork lift truck to lift and move the unit. Insert the forks as shown.

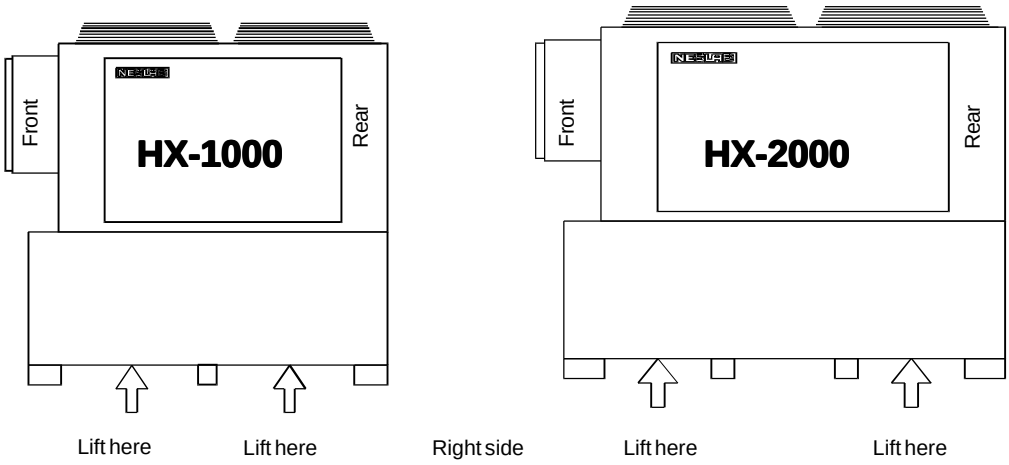

Pre-Start Up

Remove the panels to access the compressor area.

Loosen the four compressor mounting nuts until there is approximately 1/8" clearance between each compression mounting foot and the shipping bracket. This allows the compressor to "float" on the mounting rings.

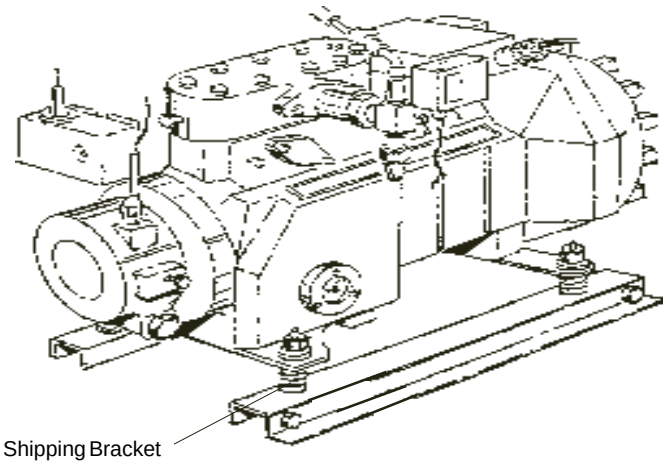

To avoid damage to the compressor, tighten the mounting nuts before moving the unit.

Warranty

The unit has a warranty against defective parts and workmanship is for one full year from date of shipment. See back page for more details.

After-Sale Support

Thermo NESLAB is committed to customer service both during and after the sale. If you have questions concerning the operation of your unit, please contact our Sales Department. If your unit fails to operate properly, or if you have questions concerning spare parts or Service Contracts, please contact our Customer Service Department.

Before calling, *please* refer to the serial number label in the electrical enclosure to obtain the following information:

- BOM number _____

- Serial number _____

- Software version (see page 25) _____

Section I Safety

Warnings

Make sure you read and understand all instructions and safety precautions listed in this manual before installing or operating your unit. If you have any questions concerning the operation of your unit or the information in this manual, contact our Sales Department.

Transport the unit with care. Sudden jolts or drops can damage the refrigeration lines.

Never operate the unit without cooling fluid.

Observe all warning labels.

Never remove warning labels.

Never operate damaged or leaking equipment.

Always turn off the unit and disconnect from the line cord before performing any service or maintenance procedures.

Never operate equipment with damaged line cords.

In addition to the safety warnings listed above, warnings are posted through out the manual. These warnings are designated by an exclamation mark inside an equilateral triangle with test highlighted in bold. Read and follow these important instructions. Failure to observe these instructions can result in permanent damage to the unit, significant property damage, or personal injury or death.

Section II General Information

Description

Your HX Recirculating Chiller is designed to provide a continuous flow of cooling fluid at a constant temperature and pressure.

The unit consists of a reservoir, circulating pump, air-cooled refrigeration system, and a digital temperature controller. The unit can run from a remote monitoring/controlling device.

The unit is designed for all-weather use. This allows heat produced by the instrument being cooled to be discharged outdoors. The high capacity pump allows the unit to be located a great distance from the instrument being cooled. The pump flow is adjustable at the unit.

Specifications

Cooling Capacity

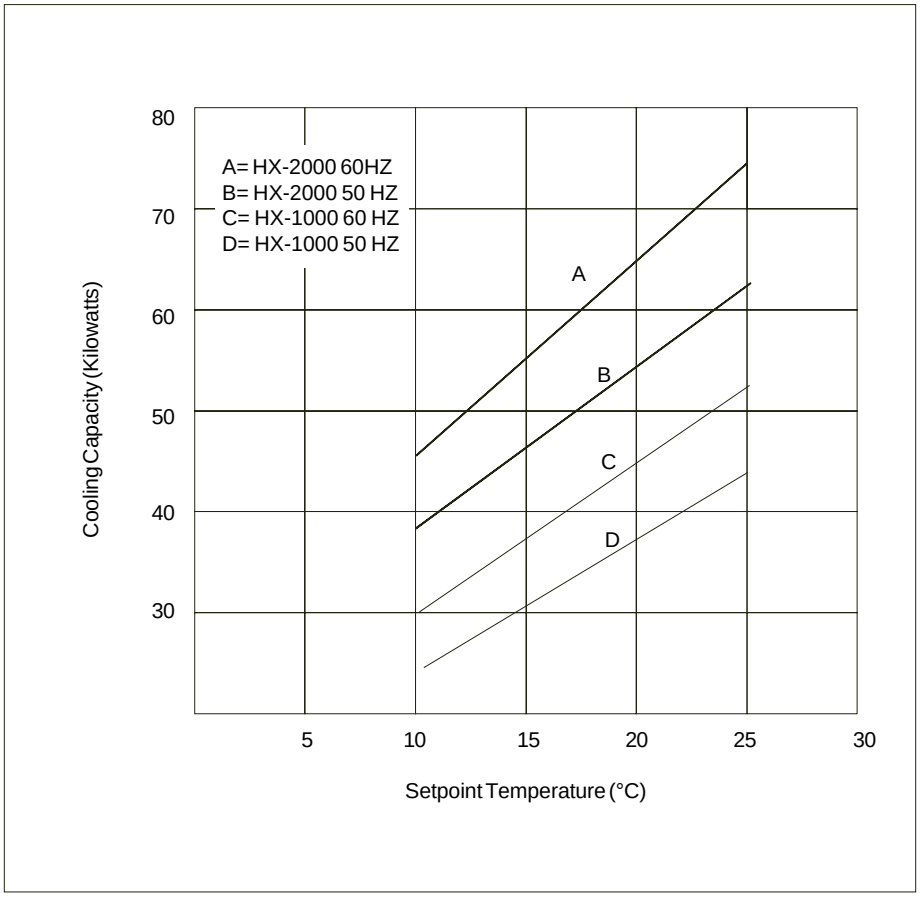

Temperature Range	+10°C to +25°C
Temperature Stability[1]	±1.0°C
Pump Capacity	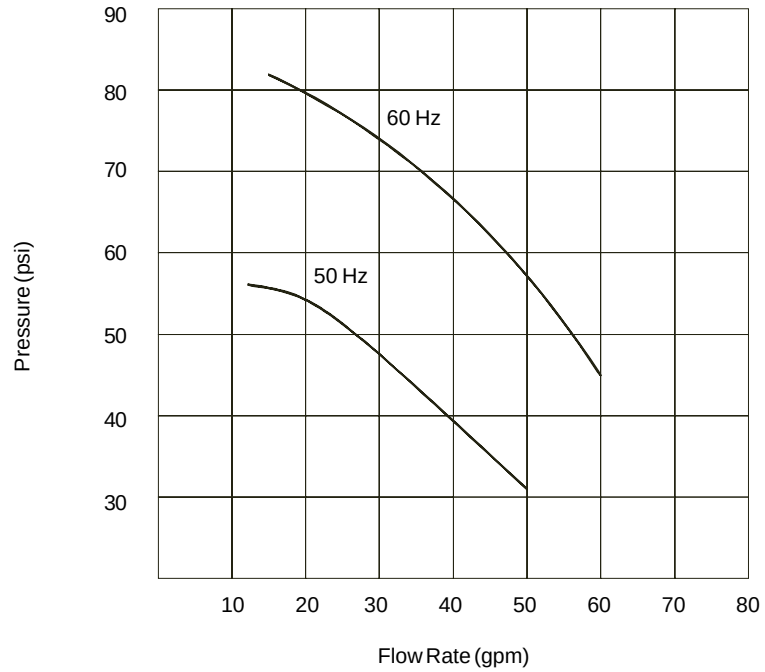

	HX-1000	**HX-2000**
Compressor	10 hp	20 hp
Dimensions (H x W x D)		
Inches	73½ X 58 X 30	76 x 67¼ x 34
Centimeters	186.7 x 147.3 x 76.2	193.0 X 170.8 X 86.4
Shipping Weight		
Pounds	1612	2061
Kilograms	731	945

1. Specifications listed for units under full load circulating at 25°C, ambient 21°C, with 50% water and 50% Ethylene Glycol as coolant. Specifications will be affected by changes in temperature, ambient, or fluids. Specifications subject to change.

Section III Installation

Site

Install the unit on a well-constructed level surface, able to withstand a distributed load of 3000 pounds (1360 kilograms) for HX-2000 units, 1700 pounds (770 kilograms) for HX-1000 units.

The unit has an air-cooled refrigeration system. Air is drawn through the slotted metal grilles on either side of the unit, and exhausted through the fans on top of the unit. Air flow through the fans is 12300 feet^3/minute for HX-2000 units, 6500 feet^3/minute for HX-1000 units.

The unit should be placed in an area where the air intake and discharge are not impeded. A minimum clearance of 3.5 feet (1 meter) on all four sides and 7 feet (2 meters) above the unit is necessary for adequate air flow and easy access to the side panels for service and maintenance.

The ambient range of the unit is -10°F to +110°F (-22°C to +43°C).

NOTE: If the chiller is subject to high-ambient temperatures (above 100°F), Thermo Thermo NESLAB recommends providing it as much shade as possible. High-ambient temperatures and direct sunlight can generate high-refrigerant pressures capable of shutting down the unit.

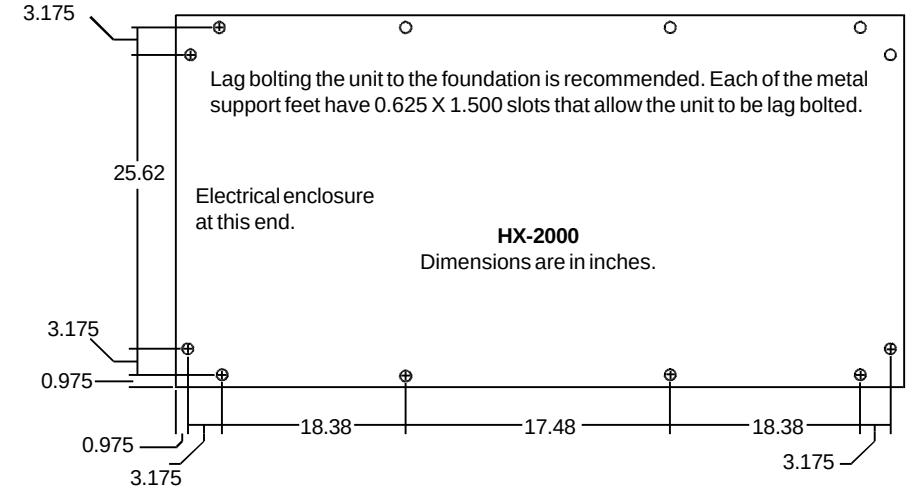

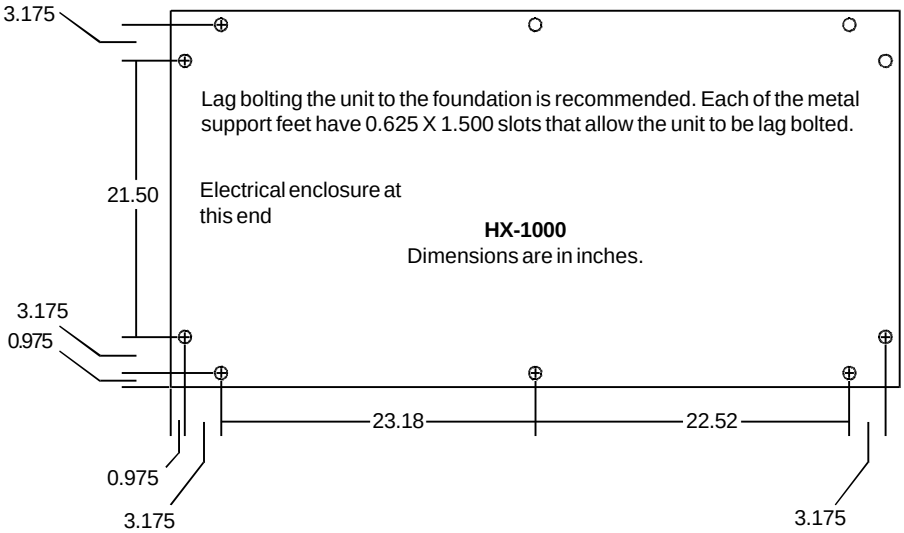

Pre-Start Up

Remove the two side access panels and the rear access panel (opposite end from the electrical enclosure) to access the compressor area. Check the compressor oil level through the sight glass on the compressor crankcase. It is identified as the glass port hole in the compressor wall. The oil level should be no less than ½ full. If the oil is below ½, contact Thermo Thermo NESLAB Service.

Check the refrigerant sightglass. If the dot in the middle of the sightglass is green, the refrigerant is normal. If the dot is yellow, the refrigerant is contaminated. Contact our Service Department for assistance.

Close the COOLING WATER INLET and OUTLET by turning the valve handles fully clockwise.

Make sure the grilles on the sides of the unit (covering condensers) and the fans on the top of the unit are free of obstructions.

After all electrical and plumbing connections have been completed, close the enclosure door and secure the door latch arm (disconnect).

The unit is equipped with a set of valves on the tank inlet and outlet which prevent the tank from overflowing when the pump is off.

The unit has an automatic compressor crankcase heater. The crankcase heater warms the oil in the compressor and prevents refrigerant and the crankcase oil from mixing. Before initial start up, or after storage, the unit must be connected to the power source for at least 12 hours before turning the unit on. This will allow time for the crankcase oil to be heated and the refrigerant to separate from the oil.

For HX-2000 units, apply power to the unit for a minimum of three minutes before starting. This allows the compressor motor overload timer to complete cycling. If the START button is pressed too early, the compressor will not start until the timer has finished its cycle. On some units this may trigger a compressor fault and a shutdown cycle. In this case, wait approximately another three minutes then clear all alarms. Restart the unit.

Electrical Requirements

Refer to the serial number label on the inside of the electrical enclosure for the specific electrical requirements of your unit. Also on the inside of the enclosure, ensure the voltage setting on the phase monitor voltage arrow is correct.

Electrical Connections

For personal safety and equipment reliability, this procedure should be performed by a qualified service technician familiar with the safety procedures required for working inside an energized disconnect box.

A unit wiring diagram is located in the document sleeve inside the door of the electrical enclosure. Wire the unit in conformance to local, state and federal electrical codes. Check all wiring to make sure it is properly connected and protected from the elements.

Install a conduit connector in the wall of the electrical enclosure; a hole must be drilled in the enclosure to accommodate the connector. The location of the hole is user-defined; the hole can be drilled in any of the four enclosure wall (except the upper left side wall, where the control panel is located). This allows the power supply to be installed in the enclosure at a point that is convenient for the user.

Use four-wire cable to connect the appropriate power supply (see Electrical Requirements) to the main circuit breaker located on the right side of the enclosure. For ground, use the copper terminal board on the bottom of the enclosure. Install a second circuit breaker at the power source. This second circuit breaker prevents exposure to “live” wires during installation.

The door latch arm on the enclosure activates the main disconnect for the power supply to the unit. When the door is closed, the disconnect is engaged when the latch arm is pulled up to the ON position. The POWER ON lamp on the control panel indicates the status of the disconnect.

The five door clamps must be secured for the enclosure to be weather-tight.

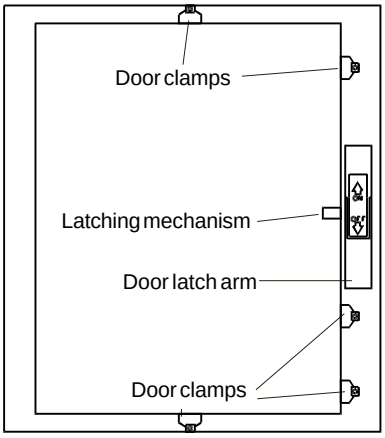

Electrical enclosure (the door has been omitted for clarity)

Remote Box Electrical Connections

For personal safety and equipment reliability, this procedure must be performed by a qualified service technician familiar with the safety procedures required for working inside an energized disconnect box.

Wiring diagrams are located inside the document sleeve inside the electrical enclosure. Wire the unit in conformance to all local, state and federal electrical codes. Check all wiring and make sure it is properly connected and protected from the elements.

Install a conduit connector in the wall of the unit's electrical enclosure. A hole must be drilled in the electrical enclosure to accommodate the connectors. The location of the hole is user-defined; this allows the connecting cable to be installed in the electrical enclosure at a point that is convenient to the user. The hole can be drilled in any of the four enclosure walls.

Wire the connections for the remote box as shown. 2TB is located inside the electrical enclosure, on the left-hand side.

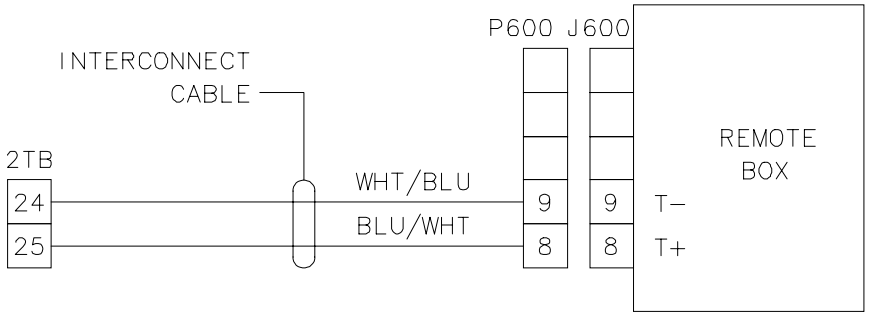

Plumbing Requirements

The inlet and outlet of the unit are labelled COOLING WATER INLET and OUTLET. These connections are 1¼ inch FPT.

Follow good plumbing practices to minimize unnecessary bends and restrictions that will increase the pressure drop through the circulating lines. Refer to Pressure Drop Chart on the next page to estimate the pressure drop through various diameter tube lengths.

Insulate all tubes and fittings to minimize loss of cooling capacity. This is extremely important in areas of ambient extremes or when the unit is located a great distance from the instrument being cooled. All tubing and fittings should be weather resistant, able to endure high and low ambient conditions, and able to withstand a maximum pressure of 120 psi.

Insulating hose is available from Thermo Thermo NESLAB. Contact our Sales Department for more information.

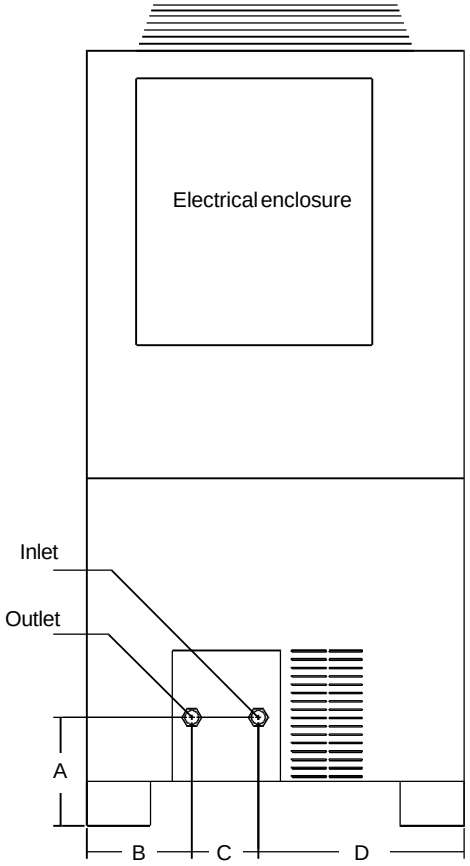

	A	B	C	D
HX-1000	9.375	8.5	5	16.3125
HX-2000	9.375	10.215	5	18.875

Dimensions of the inlet and outlet.
Dimensions are in inches.

Use the Pump Capacity Chart (see Specifications) and the Pressure Drop Chart to calculate the maximum distance you can locate the unit from the system being cooled. Find the point on the Pump Capacity Chart that matches the flow and pressure requirements of the system being cooled. From that point, estimate the pressure difference between the pump performance line, and the point you have chosen on the graph. This net pressure value, used with the Pressure Drop Chart, will help determine the maximum distance from the chiller to the system being cooled and the tubing diameter (ID).

NOTE: The unit is equipped with a set of valves on the tank inlet and outlet which prevent the tank from overflowing when the pump is off.

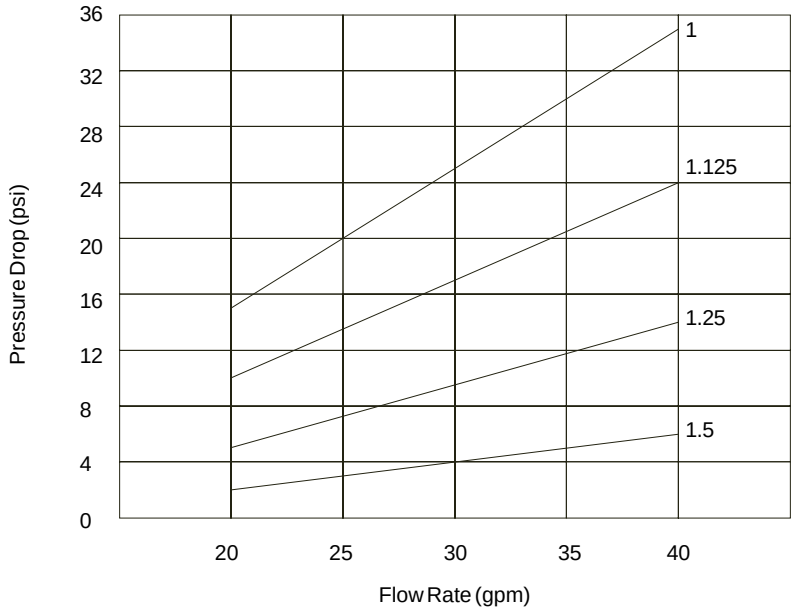

Material: 100 feet copper tubing. Dimensions are inside diameter (ID), measured in inches.

Fluid

A non-freezing fluid is required for operation at any recirculating or ambient temperature. The selected fluid must have a viscosity of 50 centistokes or less at the lowest operating temperature.

Due to the physical nature of a plate heat exchanger, and its response to temperature changes, 100% water must not be used as a circulating fluid. Using 100% water may cause the plate heat exchanger to rupture.

Never use corrosive or flammable fluids with this unit.

Never use automotive antifreeze. Commercial antifreeze contains silicates that can cause permanent damage to the pump seals.

Noncompliance with the statements in the section can result in damage to the unit and will void the manufacturer's warranty. For more information contact our Sales Department (see Preface, After-sale Support).

The wetted parts are:

- *Stainless steel*
- *Bronze*
- *Brass*
- *Copper*
- *PVC Plastic*

Filling Requirements

Ensure the INLET and OUTLET valves on the front of the outside of the unit are closed.

Open the unit's lower-right hand side panel and locate the 1¼" suction gate valve. (It is the largest valve in the unit and is located between the reservoir and compressor.)

Ensure the suction gate valve is fully closed.

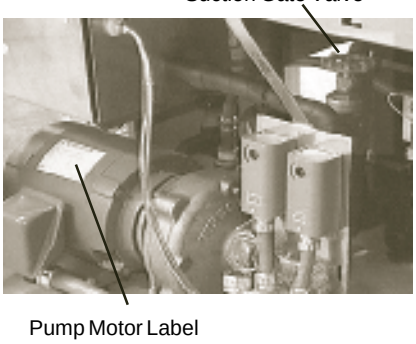

The unit is equipped with a low flow cutout. While filling the unit it is important to ensure that the cutout senses a minimum of 10 gpm through the return line, and that the reservoir does not run dry.

Running the reservoir dry may permanently damage the pump seals.

Three possible options for filling the lines without running the reservoir dry or causing the unit to cut out on low flow are:

Option #1

1. Connect the INLET/OUTLET recirculation lines from the HX to your application.
2. Pre-fill the circulation lines with the appropriate mixture of a non-freezing fluid.
3. Remove the reservoir cover located under the electrical enclosure. Fill the reservoir approximately ¾ full. Start the unit and allow it to run 15 - 20 minutes.
4. Slowly open the OUTLET valve. **Opening the valve too quickly will cause water-hammering.**
5. Keep the reservoir topped off to within one inch of the top. (There could be some substantial splashing from the reservoir as air is purged from the lines.)
6. Your application may be started at this time.
7. As the recirculation lines continue to fill, keep topping off the reservoir.
8. When the reservoir no longer needs additional fluid, fully open the suction gate valve.
9. Allow the unit to run 10 to 15 minutes to purge any remaining air.
10. Ensure the reservoir is filled to within one inch of the top.
11. Close the reservoir cover.
12. Install the unit's lower right-hand side panel.

Option # 2

Refer to the diagram below and install a bypass assembly with two ball-valves and a flow meter in the circulation lines.

1. Ensure both ball-valves are closed.

2. Remove the reservoir cover located under the electrical enclosure. Fill the reservoir approximately ¾ full. Start the unit and allow it to run 15-20 minutes.

3. Slowly open the OUTLET valve. **Opening the valve too quickly will cause water-hammering.**

4. Slowly open the bypass ball-valve so the flow on the return line is 20 gpm.

5. Slowly open the supply line ball-valve. A reservoir fluid loss will occur as the lines start to fill, continually fill the reservoir as the fluid level drops. Open the supply line ball-valve to a point where there is enough flow to fill the lines in a reasonable amount of time, and at a flow rate equal to the ability to replenish the reservoir fluid. **If the flow drops below 10 gpm the low-flow cutout will trip.**

6. Ensure all the circulation lines are full and free of air, and that the reservoir is filled to within 1 inch of the top. If desired, calculate the total amount of fluid required to fill the lines and stop filling when that amount is consumed. It will take some time to bleed air from the system.

7. Your application may be started at this time.

8. Fully open the supply line ball-valve.

9. Slowly close the bypass ball-valve. Ensure the flow rate does not drop below 10 gpm.

10. When the reservoir no longer needs additional fluid, fully open the suction gate valve.

11. Close the reservoir cover.

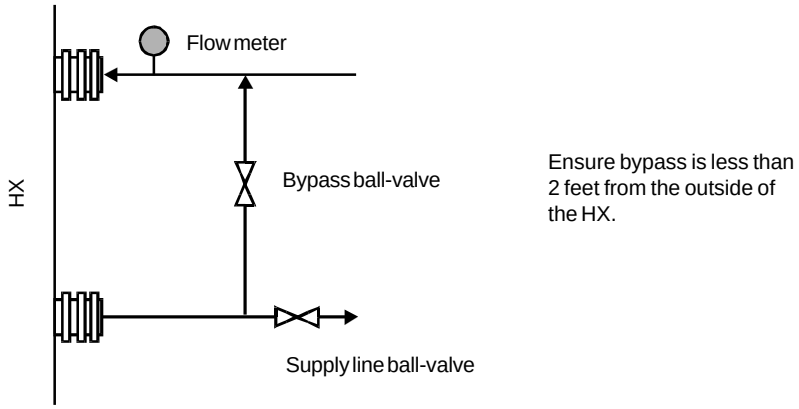

12. Install the unit's lower right-hand side panel.

Option 3

Arrange for a Thermo Thermo NESLAB service technician to be on-site in order to perform and installation inspection and assist with starting the unit.

Section IV Operation

Start Up

Ensure the door latch arm (disconnect) has been on with the POWER ON lamp lit for at least 12 hours. This will allow time for the crankcase oil to be heated and the refrigerant to separate from the oil.

Review the filling requirements given on the previous page.

Partially open the COOLING WATER INLET and OUTLET by turning the valve handles counterclockwise.

Turn the MACHINE OFF/ON switch to the ON position. The MACHINE ON lamp will light. Press the START button. The display will flash STARTING for approximately two minutes.

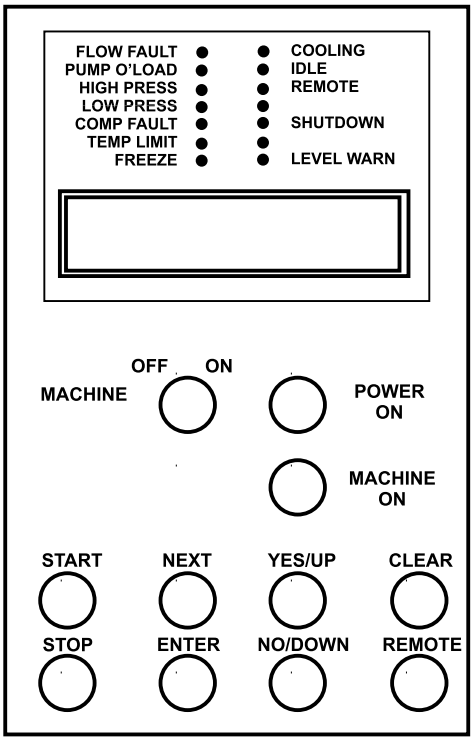

NOTE: For HX-2000 units, leave the MACHINE ON/OFF switch in the ON position for a minimum of three minutes before starting. This allows the compressor motor overload timer to complete cycling. If the START button is pressed too early, the compressor will not start until the timer has finished its cycle. On some units this may trigger a COMPRESSOR FAULT and a SHUTDOWN cycle. In this case, wait approximately another three minutes then CLEAR all alarms.

NOTE: On starting, if the reservoir fluid temperature is outside the unit's temperature range the unit will run but the TEMP LIMIT LED will flash until the fluid temperature is within the limits.

Shut Down

When the unit is manually shut down using the STOP button, a time delay is activated that allows the refrigeration system and the pump to continue to operate. The system will run in the shutdown mode for 30 seconds. This additional run time allows all refrigerant to be removed from the heat exchanger and for the heat exchanger to warm up.

NOTE: The unit is equipped with a set of valves on the tank inlet and outlet designed to prevent the tank from overflowing when the pump is off.

Shutting the unit off using the MACHINE OFF button, a circuit breaker or other device on the line side of the relay will defeat the purpose of the off cycle and is not recommended. Implement remote on/off control through the controller's serial port.

Unit Controller

MACHINE ON
Energizes the control circuits in preparation for operation.

MACHINE OFF
Immediately de-energizes the control circuits. Do not use this button for normal on/off control, use the STOP button. MACHINE OFF will stop all motors immediately and defeat the normal shut down sequence.

START
Starts the pump, compressor, and heater.

STOP
Initiates shut down sequence.

NEXT
Scrolls through the menus.

ENTER
Confirms entry of numeric values.

YES
Answers Yes to Y/N questions, increments numerical values.

NO
Answers NO to Y/N questions, decrements numerical values.

CLEAR
Clears alarm indications after fault condition has been corrected. Alarm LEDs will remain lit after problem is eliminated to provide indication of problem cause. CLEAR removes these indicators, see Corrective Action on the next page.

REMOTE
Toggles the unit between local and remote operation.

Status LEDs

LED	Indication	Response	Corrective Action
FLOW FAULT	Flow through heat exchanger is low. Pressure drop across exchanger too high (blocked) or flow rate is too low.	Pump and refrigeration stops.	Check recirculating system for flow blocked, frozen exchanger. Press CLEAR, START.
PUMP O'LOAD	Pump motor overload. Overload protector tripped.	Pump and refrigeration stops.	Check supply voltage, pump bearings. Reset motor protector, press CLEAR, START.
HIGH PRESS	Refrigeration high pressure condition. High pressure switch opened.	Refrigeration stops.	Check condenser air flow, dirty condenser. Press CLEAR, START.
LOW PRESS	Refrigeration low pressure condition. Low pressure switch open.	Refrigeration stops.	Check control malfunction, refrigerant leak. Press CLEAR, START.
COMP FAULT	Compressor oil pressure low or motor overload. Oil pressure switch open, motor overload protector trips.	Refrigeration stops.	Check oil sight glass, line voltage. Reset oil pressure switch, press CLEAR, START.
TEMP LIMIT	Temperature has exceed high or low limit settings. Measured temperature is abnormal. The LED may flash during start up, this is normal.	Pump and refrigeration stops.	Check measurement and control systems. LED goes out when temperature is within limits.
FREEZE	Flow through heat exchanger is low and pressure is increasing.	Unit shuts down.	Check fluid mixture for optimum freeze point.
COOLING	Refrigeration active.	Normal operation.	NA
IDLE	Heating active.	Normal Operation.	NA

LED	Indication	Response	Corrective Action
REMOTE	Remote control is selected. Normal operation.	Unit uses remote commands, settings.	NA. Press REMOTE to cancel.
SHUTDOWN	System is in shutdown sequence. Normal operation, motors will stop after ~30 seconds.	Normal shutdown sequence.	NA.
LEVEL WARN	Fluid level is low. Reservoir upper level switch is open.	Normally, pump and refrigeration stops. Unit can be configured to keep running.	Fill reservoir.

Changing a Value

The **YES** key increments the value. The **NO** key decrements the value.

The display will flash as soon as either key is depressed, and will continue to flash until the **ENTER** key is pressed to accept the new value.

The new value will not be used by the controller until the **ENTER** key is depressed and the display stops flashing.

If the **NEXT** key is pressed while the value is flashing, the new value will not be accepted. The display will stop flashing and the original value will be displayed. In this case the **NEXT** key can be used to abort data entry. The display will not sequence unless the **NEXT** key is depress again.

For large values the display can be changed by manipulating the individual digits. Press the **YES** key and the **NO** key at the same time. The most significant digit will start to flash. The **YES** key increments or the **NO** key decrements the digit. Press the **ENTER** key to accept the digit and to move to the next most significant digit. Repeat until all digits are entered. Pressing the **NEXT** key before all digit are entered will abort the procedure and return the display to the original value.

The controller will not allow you to enter a value above the maximum (+40°C) or below the minimum (0°C). If you try to enter an illegal value outside the operating range, the display will revert to its original value.

Controller Displays

An alphanumeric display presents numeric readings of various operating conditions within the chiller. Display function is selected by pressing the appropriate keys to move through a menu of available information.

Operator's Loop

When the controller is first powered it goes through a short self-test and then enters the Operator's Loop, displaying the reservoir fluid temperature.

By pressing the NEXT key the controller will step through the menu shown below.

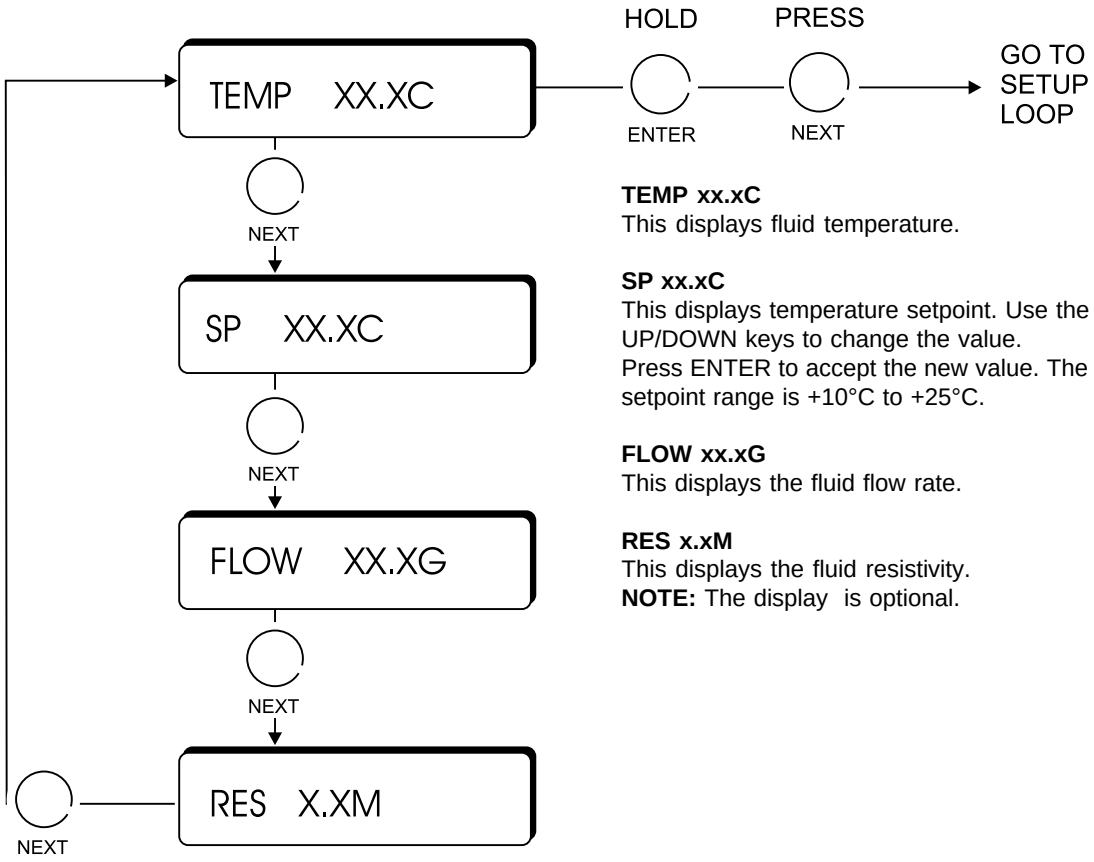

TEMP xx.xC
This displays fluid temperature.

SP xx.xC
This displays temperature setpoint. Use the UP/DOWN keys to change the value. Press ENTER to accept the new value. The setpoint range is +10°C to +25°C.

FLOW xx.xG
This displays the fluid flow rate.

RES x.xM
This displays the fluid resistivity.
NOTE: The display is optional.

Figure 1 Operator's Loop

Setup Loop

The Setup Loop allows the operator to change the temperature fault setpoints, low flow rate (10 GPM minimum), the controller's COOL PID parameters, and to select a low level condition to act as a fault or warning. **NOTE:** Thermo Thermo NESLAB recommends configuring the unit to fault; after a power lose the unit will automatically default to the fault mode.

To enter this loop you must be in the Operator's Loop and displaying the reservoir fluid temperature. Depress and hold the ENTER key then press NEXT. Adjust values with the UP and DOWN keys. Press ENTER for the controller to accept each new entry.

NOTE: Should you desire to return to the supply line temperature display and abort any changes, keep pressing the NEXT until the display reads **SAVE?** then press NO**.**

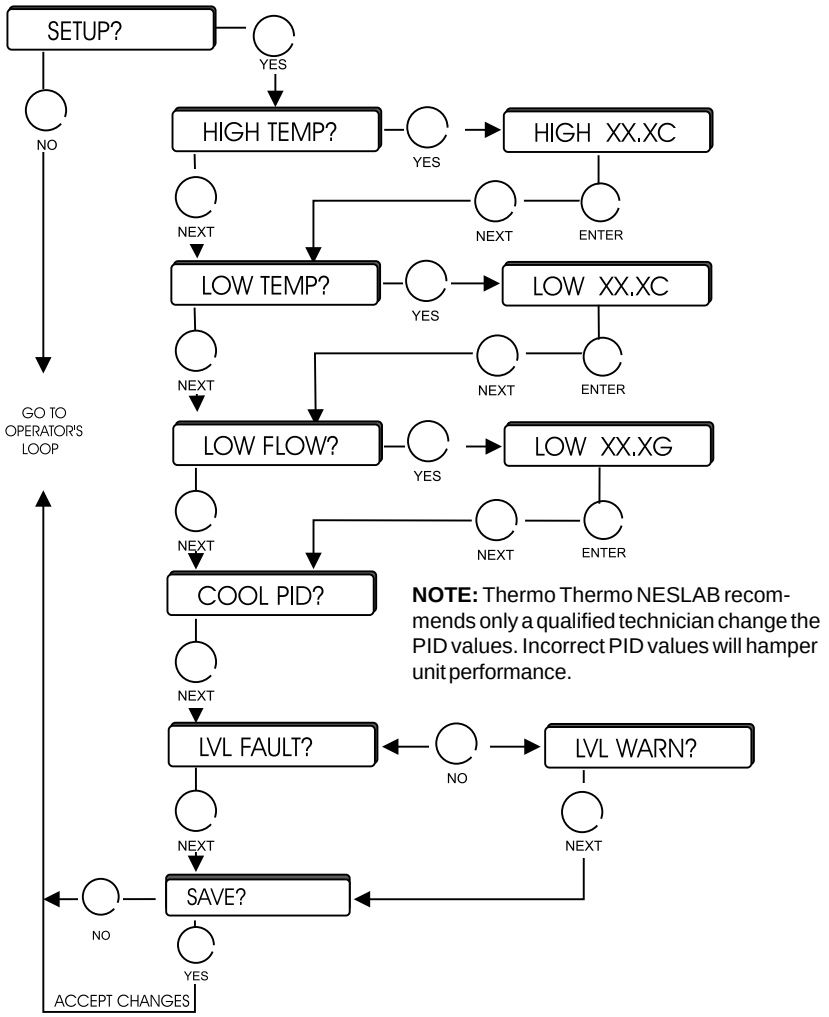

Figure 2 Setup Loop

Remote Operation

Follow the safety precautions and installation procedures outlined in Electrical Connections for the proper remote box installation instructions.

To start the unit the MACHINE ON lamp must be energized.

To operate using the remote box press the REMOTE button on the local controller. The remote box will momentarily display ####### and then display the current reservoir temperature. ####### indicates that communication is not yet established between the local unit and the remote box. If the ####### display does not extinguish check the connections and then toggle the power to the unit. The REMOTE ENABLED LED on the remote box and the REMOTE LED on the local controller will both illuminate.

NOTE: If you press STOP on the remote box, you cannot re-enable the remote mode from the remote box.

While in the remote mode, the local controller only mirrors the remote controller's display. However, you can use the local controller to return to the local mode. Press REMOTE, the REMOTE LED will turn off.

The remote box also has a 15-pin connector for standard 10mV/°C temperature output (between pin 7 and referenced to pin 6). It can be used for a chart recorder or other recording device. An optional 0 - 10VDC signal is available.

Configuration

The remote box can be configured for 110V or 220V operation. The voltage is displayed on the power inlet module located on the rear of the remote box. To change the voltage pry the module out from the power connection. Remove the voltage plug from the module and rotate it 180°. Reinstall the plug. The desired voltage should be displayed. Reinstall the inlet module.

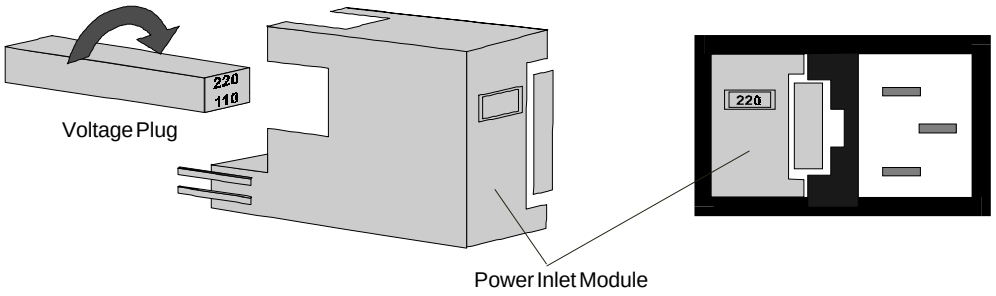

Flow Rate

Adjust the flow rate to the system being cooled by turning the COOLING WATER OUTLET valve. Use a flow meter on the COOLING WATER OUTLET to adjust the desired flow rate.

High and Low Temperature Cutout

The High and Low Temperature Cutouts (HTC/LTC) monitor the cooling fluid temperature as it exits the heat exchanger. They prevent the cooling fluid from reaching excessively high or low temperatures that can damage the unit.

In the event of a high temperature fault, the TEMP LIMIT LED will illuminate, and the unit will enter the shut down mode. The unit will remain off and must be manually restarted.

In the event of a low temperature fault, the TEMP LIMIT LED will illuminate and the compressor will shut down. The compressor will remain off until the cooling fluid temperature rises above the cut off point.

The HTC is set at +80°F (+27°C). The LTC is set at +25°F (-6°C). If adjustments are needed, contact our Customer Service Department for assistance.

High and Low Pressure Cutout

The High and Low Pressure Cutouts (HPC/LPC) monitor the refrigeration pressure at the compressor. They prevent excessively high or low pressures that can damage the unit. In the event of a high pressure fault, the HIGH PRESS LED will illuminate and the unit will enter the shut down mode until the refrigeration pressure drops below the cut in point.

During a low pressure fault, the LOW PRESS LED will illuminate and the compressor and discharge fans shut down until the refrigeration pressure rises above the cut in point.

When either condition is identified and corrected, press the CLEAR key before restarting the unit.

Phase Rotation & Voltage Monitor Device

If the POWER ON light is on but the MACHINE ON light is not when the MACHINE ON button is pressed, the input power phase rotation is reversed. This condition may occur at installation. If rotation is reversed, remove power, swap any two line leads at the power entry and then restore power. This should correct a rotation fault.

NOTE: With the POWER ON lamp lit, if the red light on the phase voltage monitor located in the electrical enclosure is also lit, the phase rotation is correct.

Oil Pressure Cutout

In the event of low compressor oil pressure, the Oil Pressure Cutout will shut down the compressor and the discharge fans.

After the failure has been corrected, the cut out must be reset. Push the Oil Pressure Cutout Reset button located next to the compressor.

Press the CLEAR button before restarting the unit.

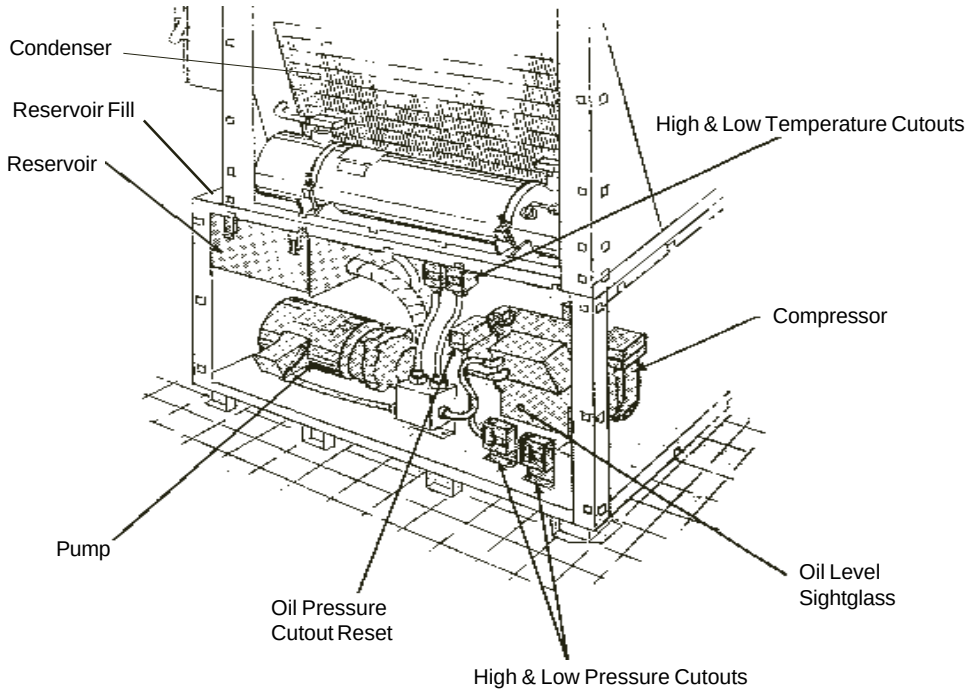

NOTE: Refrigerant sightglass is located on the other side of the unit (opposite to the compressor).

Section VI Safety Features

Safety Features

The unit is equipped with the following safety features designed to protect the unit in case of failure. LED lamps are mounted on the control panel on the electrical enclosure, and indicate operational status.

Low Fluid Level

The low fluid level monitor is connected to a float switch in the reservoir. If the reservoir level drops below a safe operating level, the LEVEL WARN LED will light. The unit's reaction will depend on how it is configured in the Setup Loop.

Pump

In the event of any of the following conditions, the PUMP O'LOAD LED will illuminate and the unit will shut down. The failure must be identified and corrected before the unit can be restarted.

- Loss of circulating flow, in the event of pump failure or ruptured pump lines.

- Pump motor thermal overload.

- High cooling fluid temperature (adjustable).

- High refrigeration pressure.

Refrigeration

In the event of any of the following conditions, the COMP FAULT will illuminate and the compressor and discharge fans will shut down. The pump/ circulating system will remain operating until the STOP button is depressed, or until the operating temperature reaches the High Temperature Cutout setting. This allows a temporary supply of cooling fluid to the instrument being cooled until the instrument being cooled can safely be turned off.

- Low compressor oil pressure.

- Low refrigeration pressure.

- Low cooling fluid temperature (adjustable).

- Compressor motor thermal overload.

In the event of any of the following conditions, the COMP FAULT LED will illuminate and the unit will shut down:

- High refrigeration pressure.

- High cooling fluid temperature (adjustable).

If your unit fails to operate properly, contact our Customer Service Department for assistance.

Section VII Maintenance

Service Contracts

Thermo Thermo NESLAB offers on-site Service Contracts that are designed to provide extended life and minimal down time for your unit. For more information, contact our Customer Service Department.

Displaying Software Version

To display the software version ensure the controller is in the Operator's Loop and displaying the reservoir fluid temperature. Depress and hold the ENTER key. Press the YES NO YES keys and the display will indicate CALIBRATE? While continuing to hold the ENTER key press the YES NO YES keys again. The display will now indicate the software version, for example 000550.64B.

Press NO and the display will return to the Operator's Loop.

Compressor Oil

Check the compressor oil level after 24 hours of operation. The minimum oil level is ½ full. If the level is lower, contact our Customer Service Department.

Cleaning

A build up of dust and debris on the condenser can cause a loss of cooling capacity. Periodically clean the condensers by removing the expanded metal grilles and blowing compressed air through the condensers or by hosing them down with water. The frequency of cleaning depends on the operating environment.

Refrigeration Data

Set High pressure switch: cut out 390 psi / cut in 250 psi.
Set Low pressure switch: cut out 5 psi / cut in 40 psi.

Charge unit with R-22 refrigerant as shown in the table. Run unit with recirculating fluid maintained at 27°C. Adjust pressures to conform:

	US measure	**Metric measure**
Amount	75 pounds	34 kg
Hot gas valve	60 PSIG	415 kPa
Suction pressure	68 - 85 PSIG	470 - 586 kPa
Discharge pressure	280 - 320 PSIG	1930 - 2200 kPa
Speed check	not specified	not specified

Hot Gas setting is observed on the suction gauge when the unit is in the heat/idle cycle.

Parts List

Our Customer Service Department can provide you with a complete list of spare parts for your unit. Phone numbers and addresses for all our Thermo Thermo NESLAB Sales Centers are located in the front of this manual (see Preface, After-sale Support). Before calling, *please* obtain the following information:

BOM number

Serial number

Software version

WARRANTY

Thermo NESLAB Instruments, Inc. warrants for 12 months from date of shipment any Thermo NESLAB unit according to the following terms.

Any part of the unit manufactured or supplied by Thermo NESLAB and found in the reasonable judgment of Thermo NESLAB to be defective in material or workmanship will be repaired at an authorized Thermo NESLAB Repair Depot without charge for parts or labor. The unit, including any defective part must be returned to an authorized Thermo NESLAB Repair Depot within the warranty period. The expense of returning the unit to the authorized Thermo NESLAB Repair Depot for warranty service will be paid for by the buyer. Thermo NESLAB's responsibility in respect to warranty claims is limited to performing the required repairs or replacements, and no claim of breach of warranty shall be cause for cancellation or recision of the contract of sales of any unit.With respect to units that qualify for field service repairs, Thermo NESLAB's responsibility is limited to the component parts necessary for the repair and the labor that is required on site to perform the repair. Any travel labor or mileage charges are the financial responsibility of the buyer.

The buyer shall be responsible for any evaluation or warranty service call (including labor charges) if no defects are found with the Thermo NESLAB product.

This warranty does not cover any unit that has been subject to misuse, neglect, or accident. This warranty does not apply to any damage to the unit that is the result of improper installation or maintenance, or to any unit that has been operated or maintained in any way contrary to the operating or maintenance instructions specified in Thermo NESLAB's Instruction and Operation Manual. This warranty does not cover any unit that has been altered or modified so as to change its intended use.

In addition, this warranty does not extend to repairs made by the use of parts, accessories, or fluids which are either incompatible with the unit or adversely affect its operation, performance, or durability.

Thermo NESLAB reserves the right to change or improve the design of any unit without assuming any obligation to modify any unit previously manufactured.

THE FOREGOING EXPRESS WARRANTY IS IN LIEU OF ALL OTHER WARRANTIES, EXPRESSED OR IMPLIED, INCLUDING BUT NOT LIMITED TO WARRANTIES OR MERCHANTABILITY AND FITNESS FOR A PARTICULAR PURPOSE.

Thermo NESLAB'S OBLIGATION UNDER THIS WARRANTY IS STRICTLY AND EXCLUSIVELY LIMITED TO THE REPAIR OR REPLACEMENT OF DEFECTIVE COMPONENT PARTS AND Thermo NESLAB DOES NOT ASSUME OR AUTHORIZE ANYONE TO ASSUME FOR IT ANY OTHER OBLIGATION.

Thermo NESLAB ASSUMES NO RESPONSIBILITY FOR INCIDENTAL, CONSEQUENTIAL, OR OTHER DAMAGES INCLUDING, BUT NOT LIMITED TO LOSS OR DAMAGE TO PROPERTY, LOSS OF PROFITS OR REVENUE, LOSS OF THE UNIT, LOSS OF TIME, OR INCONVENIENCE.

This warranty applies to units sold in the United States. Any units sold elsewhere are warranted by the affiliated marketing company of Thermo NESLAB Instruments, Inc. This warranty and all matters arising pursuant to it shall be governed by the law of the State of New Hampshire, United States. All legal actions brought in relation hereto shall be filed in the appropriate state or federal courts in New Hampshire, unless waived by Thermo NESLAB.

HX-1000 & HX-2000
Recirculating Chiller

NESLAB Manual P/N 013582
Rev 03/19/97

Instruction and Site Preparation Manual



HX-1000 & HX-2000 Recirculating Chiller

Table of Contents

Preface

Compliance 2
Unpacking 2
Lift Points 2
Pre-Star Up 3
Warranty 3
After-Sale Support 3

SECTION I
Safety

Warnings 4

SECTION II
General Information

Description 5
Specifications 5
Controls 7
Remote Controller 8

SECTION III
Installation

Site 9
Pre-Start Up 10
Electrical Requirements 11
Electrical Connections 11
Remote Electrical Connections 12
Plumbing Requirements 13
Fluid 14
Filling Requirements 15

SECTION IV
Operation

Off Cycle 16
Start Up (non-Remote units) 16
Remote (Optional) 16
Temperature Adjustment 17
Flow Rate 17
High and Low Temperature Cutout 17
High and Low Pressure Cutout 18
Oil Pressure Cutout 18

SECTION V
Safety Features

Safety Features 19
Low Fluid Level 19
Pump 19
Refrigeration 19

SECTION VI
Maintenance

Service Contracts 20
Compressor Oil 20
Cleaning 20
Parts List 20

SECTION VII
Warranty 21

Preface

Compliance

Products tested and found to be in compliance with the requirements defined in the EMC standards defined by 89/336/EEC as well as Low Voltage Directive (LVD) 73/23/EEC can be identified by the CE label on the rear of the unit. The testing has demonstrated compliance with the following directives:

LVD, 73/23/EEC	Complies with UL 3101-1:93
EMC, 89/336/EEC	EN 55011, Class A Verification
	EN 50082-1:1992
	IEC 1000-4-2:1995
	IEC 1000-4-3:1994
	IEC 1000-4-4:1995

For any additional information refer to the Letter of Compliance that shipped with the unit (Declaration of Conformity).

Unpacking

Retain all cartons and packing material until the unit is operated and found to be in good condition.

If the unit shows external or internal damage, or does not operate properly, contact the transportation company and file a damage claim. Under ICC regulations, this is your responsibility.

Units sold in North America are shipped on a wooden pallet and wrapped in protective plastic. Do not remove the banding or protective plastic until the unit is in its final location.

Units sold outside North America are shipped in a wooden crate. Do not disassemble the crate until the unit is in its final location.

The unit is secured to the pallet by lag bolts. HX-1000 units have 10 bolts, HX-2000 units have 12. Remove the lag bolts and the pallet before placing the unit on the foundation.

Lift Points

The unit is constructed on 4 inch (10.16 centimeter) high feet, each made of 14 gauge steel. HX-1000 units have 6 feet, HX-2000 units have 8. The unit construction provides a 4 inch clearance from the ground. Use a fork lift truck to lift and move the unit. Insert the forks as shown.

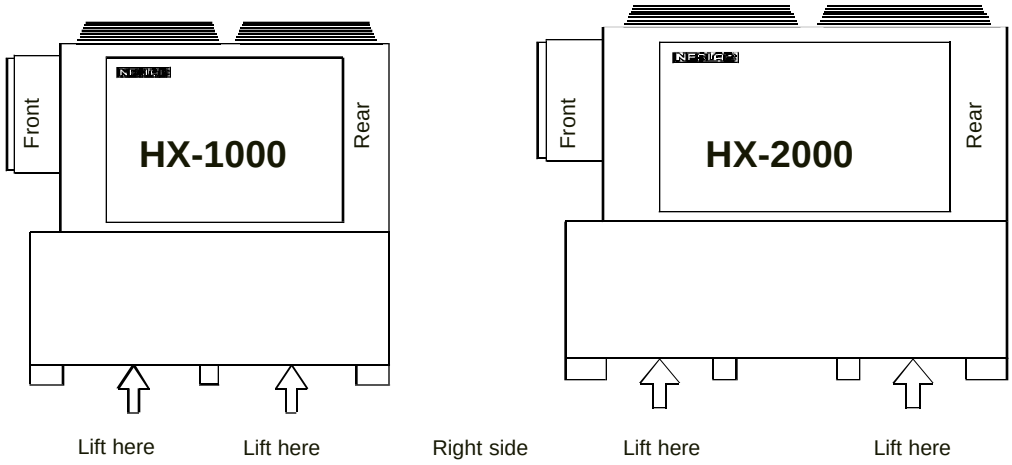

Pre-Start Up

Remove the panels to access the compressor area.

Loosen the four compressor mounting nuts until there is approximately 1/8" clearance between each compression mounting foot and the shipping bracket. This allows the compressor to "float" on the mounting rings.

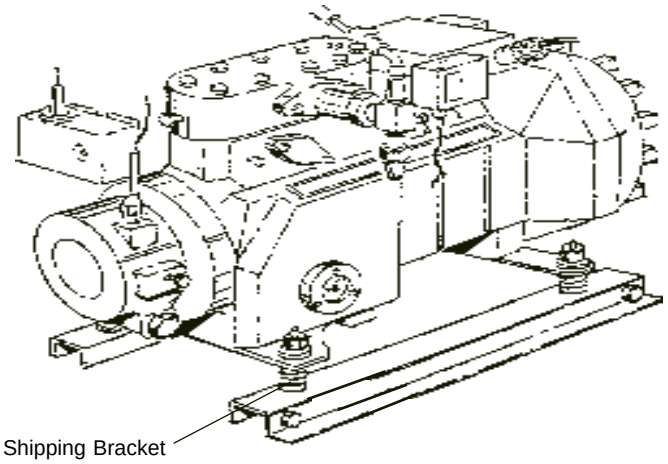

To avoid damage to the compressor, tighten the mounting nuts before moving the unit.

Warranty

The unit has a warranty against defective parts and workmanship is for one full year from date of shipment. See back page for more details.

After-Sale Support

NESLAB is committed to customer service both during and after the sale. If you have questions concerning the operation of your unit, please contact our Sales Department. If your unit fails to operate properly, or if you have questions concerning spare parts or Service Contracts, please contact our Customer Service Department.

Section I Safety

Warnings

Make sure you read and understand all instructions and safety precautions listed in this manual before installing or operating your unit. If you have any questions concerning the operation of your unit or the information in this manual, contact our Sales Department.

Transport the unit with care. Sudden jolts or drops can damage the refrigeration lines.

Never operate the unit without cooling fluid.

Observe all warning labels.

Never remove warning labels.

Never operate damaged or leaking equipment.

Always turn off the unit and disconnect from the line cord before performing any service or maintenance procedures.

Never operate equipment with damaged line cords.

In addition to the safety warnings listed above, warnings are posted through out the manual. These warnings are designated by an exclamation mark inside an equilateral triangle with test highlighted in bold. Read and follow these important instructions. Failure to observe these instructions can result in permanent damage to the unit, significant property damage, or personal injury or death.

Section II General Information

Description

Your HX Recirculating Chiller is designed to provide a continuous flow of cooling fluid at a constant temperature and pressure.

The unit consists of a reservoir, circulating pump, air-cooled refrigeration system, and a digital temperature controller.

The unit is designed for all-weather use. This allows heat produced by the instrument being cooled to be discharged outdoors. The high capacity pump allows the unit to be located a great distance from the instrument being cooled. The pump flow is adjustable at the unit.

The unit can be modified to run from a remote monitoring/controlling device.

Specifications

Cooling Capacity

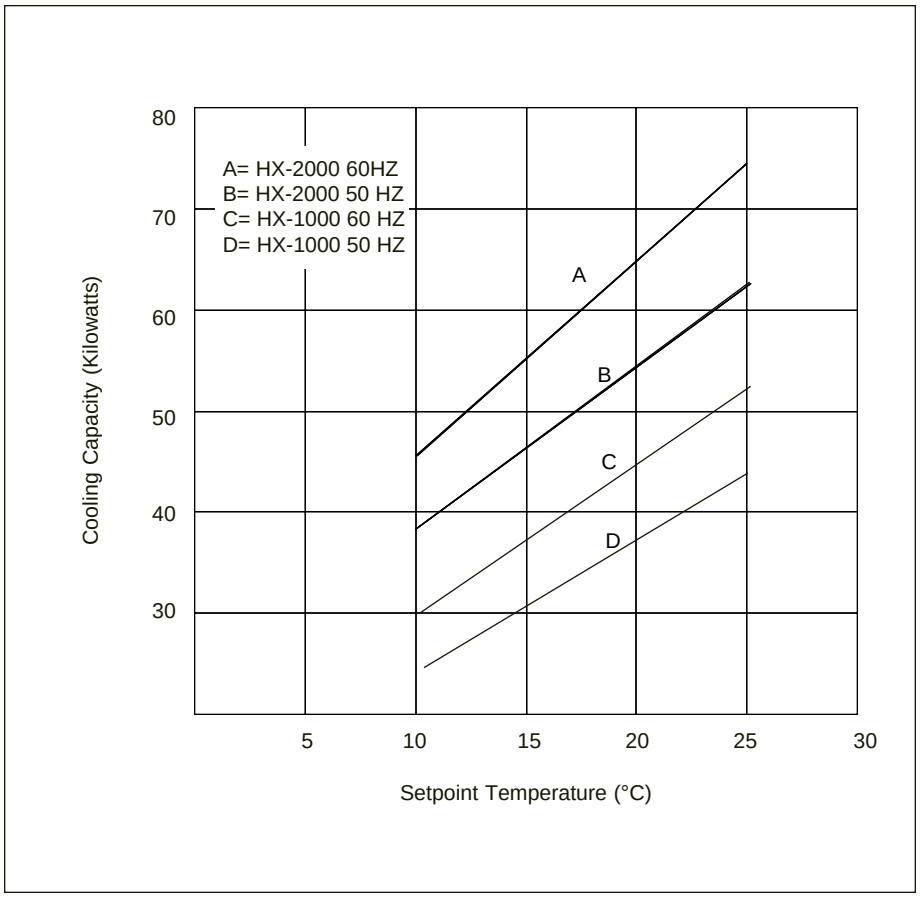

Temperature Range	+10°C to +25°C
Temperature Stability	±1.0°C
Pump Capacity	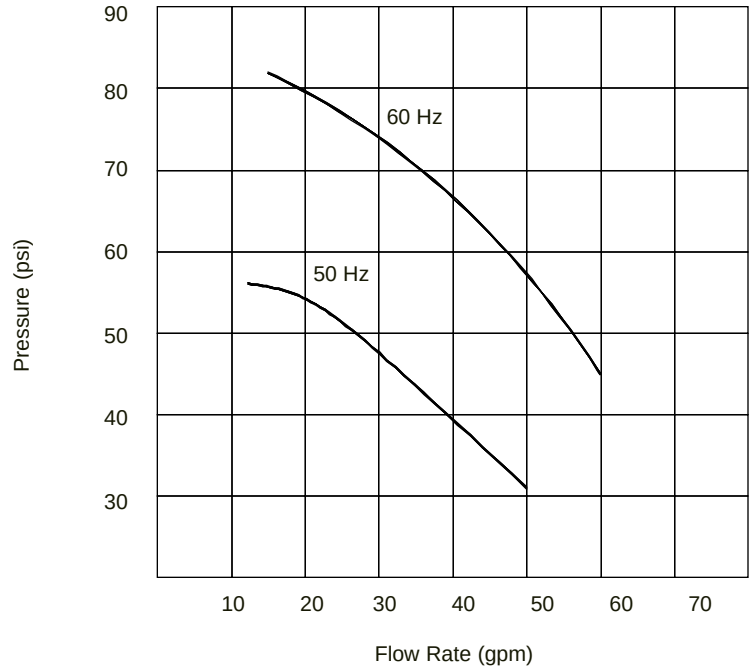

	HX-1000	**HX-2000**
Compressor	10 hp	20 hp
Dimensions (H x W x D)		
Inches	73 ½ X 58 X 30	76 x 67 ¼ x 34
Centimeters	186.7 x 147.3 x 76.2	193 X 170.8 X 86.4
Shipping Weight		
Pounds	1612	2061
Kilograms	731	945

1. Specifications listed for units circulating at 25°C, ambient 21°C, with 50% water and 50% Ethylene Glycol as coolant. Specifications will be affected by changes in temperature, ambient, or fluids.

Controls

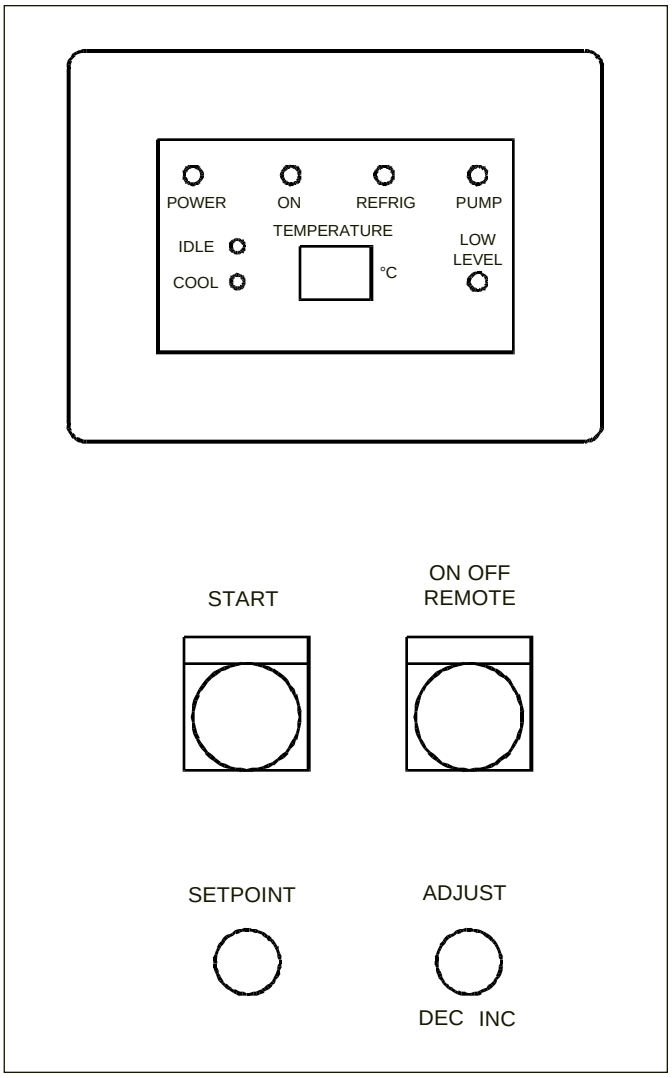

POWER
Power is supplied to the unit.

ON
The unit is operating.

REFRIG
The refrigeration system is on.

PUMP
The pump is operating.

IDLE
The unit is in hot gas by-pass mode of operation.

COOL
The refrigeration system is removing heat from the cooling fluid.

TEMPERATURE °C
Indicates operating or setpoint temperature in degrees Celsius.

LOW LEVEL
A low level fault has occurred.

START
Activates unit (only when the ON OFF REMOTE switch is in the ON position).

ON OFF REMOTE
ON position, the unit can be monitored and controlled only from the control panel on the unit.

OFF position, the unit is off.

REMOTE position, the unit can be switched on and off from a remote control device.

SETPOINT
When pressed, TEMPERATURE °C display will indicate the temperature setpoint. When released, display will indicate operating temperature.

ADJUST
Adjusts the temperature setpoint.

Remote Controller

The control box should be located in a laboratory or clean industrial environment. Never place the control box in a location where excessive heat, moisture, or corrosive materials are present.

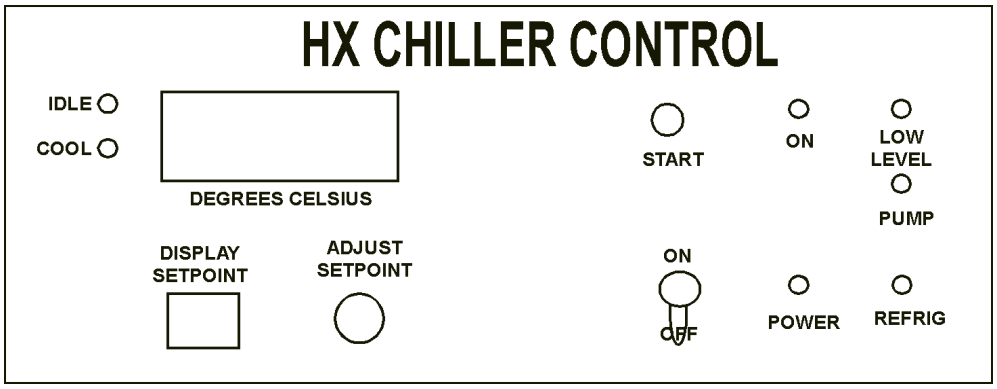

Controls

IDLE
The unit is in hot gas by-pass mode of operation.

COOL
The refrigeration system is removing heat from the cooling fluid.

DEGREES CELSIUS
Indicates operating or setpoint temperature.

DISPLAY SETPOINT
When pressed, TEMPERATURE °C display will indicate the temperature setpoint. When released, display will indicate operating temperature.

ADJUST SETPOINT
Adjusts the temperature setpoint.

START
Activates unit (when the main unit's ON OFF REMOTE switch is in the REMOTE position and the remote's ON/OFF switch is in the ON position).

ON
The unit is operating (START button depressed).

LOW LEVEL
A low level fault has occurred.

PUMP
The pump is operating.

ON/OFF
Used to start or stop the unit from the remote.

POWER
Power is supplied to the unit (ON/OFF switch in the ON position).

REFRIG
The refrigeration system is on.

Section III Installation

Site

Install the unit on a well-constructed level surface, able to withstand a distributed load of 3000 pounds (1360 kilograms) for HX-2000 units, 1700 pounds (770 kilograms) for HX-1000 units.

The unit has an air-cooled refrigeration system. Air is drawn through the slotted metal grilles on either side of the unit, and exhausted through the fans on top of the unit. Air flow through the fans is 12300 feet^3/minute for HX-2000 units, 6500 feet^3/minute for HX-1000 units.

The unit should be placed in an area where the air intake and discharge are not impeded. A minimum clearance of 3.5 feet (1 meter) on all four sides and 7 feet (2 meters) above the unit is necessary for adequate air flow and easy access to the side panels for service and maintenance.

The ambient range of the unit is -10°F to +110°F (-22°C to +43°C).

Lag bolting the unit to the foundation is recommended. Each of the metal support feet have 0.625 X 1.500 slots that allow the unit to be lag bolted.

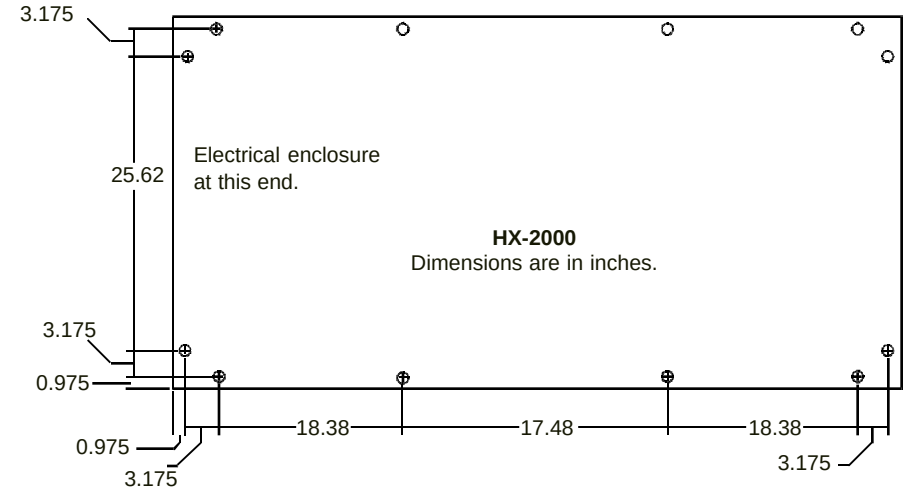

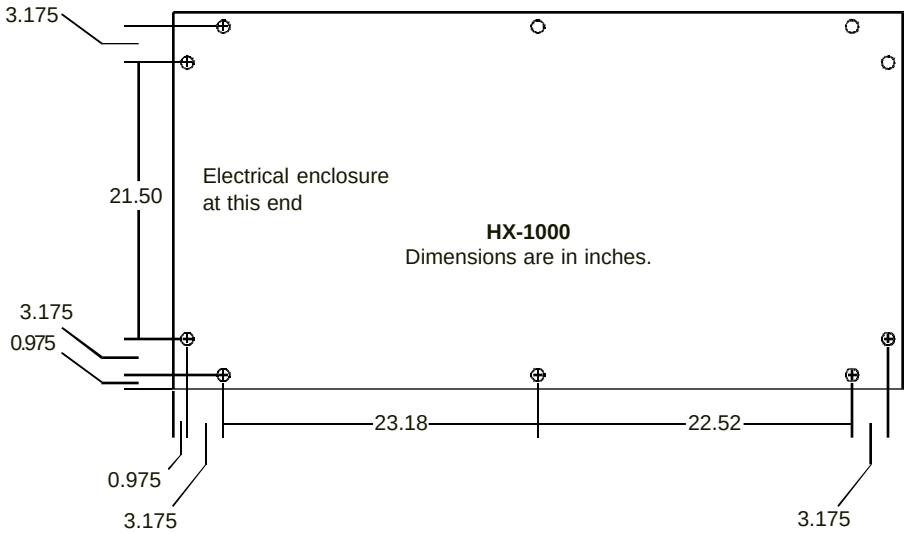

Pre-Start Up

Remove the two side access panels and the rear access panel (opposite end from the electrical enclosure) to access the compressor area.

Check the compressor oil level through the sight glass on the compressor crankcase. It is identified as the glass port hole in the compressor wall. The oil level should be no less than ½ full. If the oil is below ½, contact our Service Department.

Check the refrigerant sightglass. If the dot in the middle of the sightglass is green, the refrigerant is normal. If the dot is yellow, the refrigerant is contaminated. Contact our Service Department for assistance.

Close the COOLING WATER INLET and OUTLET by turning the valve handles fully clockwise.

Make sure the grilles on the sides of the unit (covering condensers) and the fans on the top of the unit are free of obstructions.

After all electrical and plumbing connections have been completed, close the enclosure door and secure the door latch arm (disconnect).

The unit is equipped with a set of valves on the tank inlet and outlet which prevent the tank from overflowing when the pump is off.

The unit has an automatic compressor crankcase heater. The crankcase heater warms the oil in the compressor and prevents refrigerant and the crankcase oil from mixing. Before initial start up, or after storage, the unit must be connected to the power source for at least 12 hours before turning the unit on. This will allow time for the crankcase oil to be heated and the refrigerant to separate from the oil.

Electrical Requirements

Refer to the serial number label on the inside of the electrical enclosure for the specific electrical requirements of your unit.

Electrical Connections

For personal safety and equipment reliability, this procedure should be performed by a qualified service technician familiar with the safety procedures required for working inside an energized disconnect box.

A unit wiring diagram is located in the document sleeve inside the door of the electrical enclosure. Wire the unit in conformance to local, state and federal electrical codes. Check all wiring to make sure it is properly connected and protected from the elements.

Install a conduit connector in the wall of the electrical enclosure; a hole must be drilled in the enclosure to accommodate the connector. The location of the hole is user-defined; the hole can be drilled in any of the four enclosure wall (except the upper left side wall, where the control panel is located). This allows the power supply to be installed in the enclosure at a point that is convenient for the user.

Use four-wire cable to connect the appropriate power supply (see Electrical Requirements) to the main circuit breaker located on the right side of the enclosure. Install a second circuit breaker at the power source. This second circuit breaker prevents exposure to “live” wires during installation.

The door latch arm on the enclosure activates the main disconnect for the power supply to the unit. When the door is closed, the disconnect is engaged when the latch arm is pulled up to the ON position. The POWER lamp on the control panel indicates the status of the disconnect.

The five door clamps must be secured for the enclosure to be weather-tight.

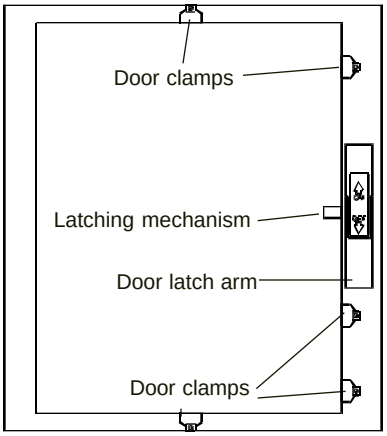

Electrical enclosure (the door has been omitted for clarity)

Remote Electrical Connections (Optional)



For personal safety and equipment reliability, this procedure must be performed by a qualified service technician familiar with the safety procedures required for working inside an energized disconnect box.

Wiring diagrams are located inside the document sleeve inside the electrical enclosure. Wire the unit in conformance to all local, state and federal electrical codes. Check all wiring and make sure it is properly connected and protected from the elements.

Install a conduit connector in the wall of the unit's electrical enclosure and in the wall of the control box. A hole must be drilled in both the electrical enclosure and the control box to accommodate the connectors. The location of these holes is user-defined; this allows the connecting cable to be installed in both the electrical enclosure and the control box at a point that is convenient to the user. The hole can be drilled in any of the four enclosure walls (except the upper left side wall, where the control panel is located). Similarly, the hole can be drilled in any of the control box walls as long as it does not interfere with the controls and lamps on the front panel.

Connect the terminal strips in the remote control box to the terminal strip located in the upper right corner of the electrical enclosure (wire number to wire number).

Plumbing Requirements

The inlet and outlet of the unit are labelled COOLING WATER INLET and OUTLET. These connections are 1¼ inch FPT.

Follow good plumbing practices to minimize unnecessary bends and restrictions that will increase the pressure drop through the circulating lines. Refer to Pressure Drop Chart on the next page to estimate the pressure drop through various diameter tube lengths.

Insulate all tubes and fittings to minimize loss of cooling capacity. This is extremely important in areas of ambient extremes or when the unit is located a great distance from the instrument being cooled. All tubing and fittings should be weather resistant, able to endure high and low ambient conditions, and able to withstand a maximum pressure of 120 psi.

Insulating hose is available from NESLAB. Contact our Sales Department for more information.

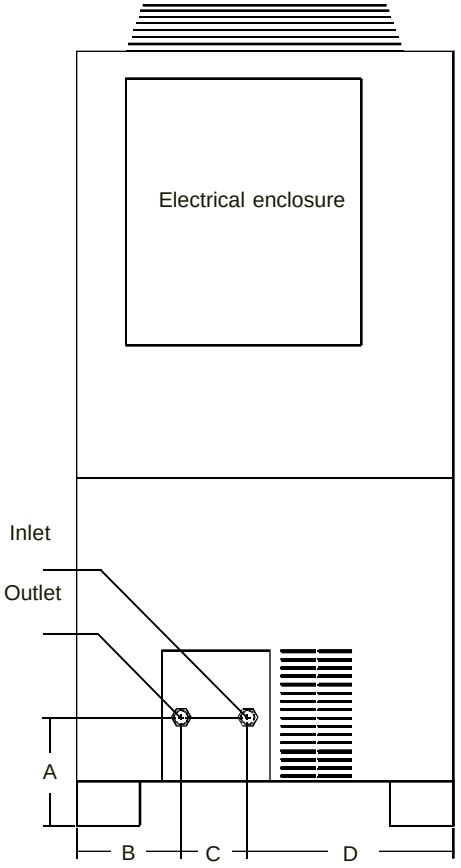

	A	B	C	D
HX-1000	9.375	8.5	5	16.3125
HX-2000	9.375	10.215	5	18.875

Dimensions of the inlet and outlet.
Dimensions are in inches.

Use the Pump Capacity Chart (see Specifications) and the Pressure Drop Chart to calculate the maximum distance you can locate the unit from the system being cooled. Find the point on the Pump Capacity Chart that matches the flow and pressure requirements of the system being cooled. From that point, estimate the pressure difference between the pump performance line, and the point you have chosen on the graph. This net pressure value, used with the Pressure Drop Chart, will help determine the maximum distance from the chiller to the system being cooled and the tubing diameter (ID).

NOTE: The unit is equipped with a set of valves on the tank inlet and outlet which prevent the tank from overflowing when the pump is off.

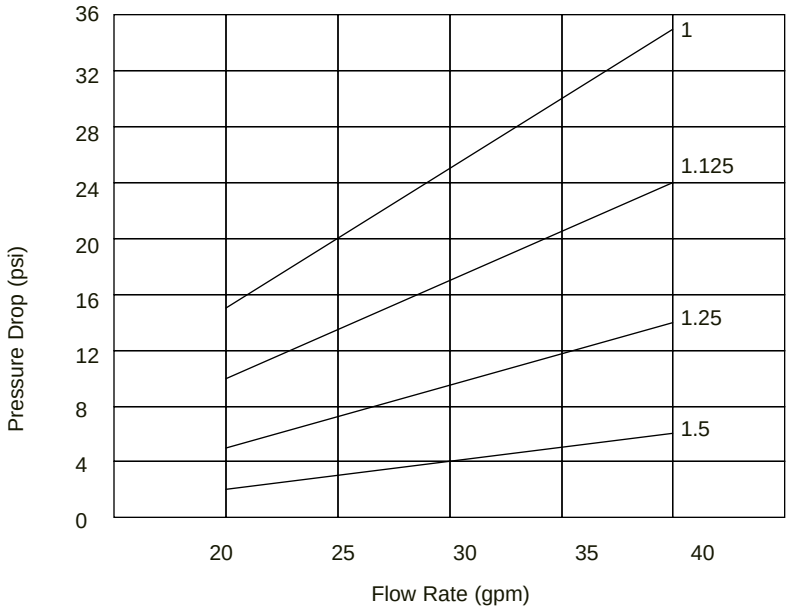

Material: 100 feet copper tubing. Dimensions are inside diameter (ID), measured in inches.

Fluid

A non-freezing fluid is required for operation at any recirculating or ambient temperature. The selected fluid must have a viscosity of 50 centistokes or less at the lowest operating temperature.

Due to the physical nature of a plate heat exchanger, and its response to temperature changes, 100% water must not be used as a circulating fluid. Using 100% water may cause the plate heat exchanger to rupture.



Never use corrosive or flammable fluids with this unit.

Never use automobile anti-freeze. Commercial anti-freeze contains silicates that can cause permanent damage to the pump seals.

Non-compliance with the statements in the section can result in damage to the unit and will void the manufacturer's warranty. For more information contact our Sales Department (see Preface, After-sale Support).

The wetted parts are:

- *Stainless steel*
- *Bronze*
- *Brass*
- *Copper*
- *PVC Plastic*

Filling Requirements

Ensure the INLET and OUTLET valves on the front of the outside of the unit are closed. Connect the INLET/OUTLET recirculation lines from the HX to your application.

Open the unit's lower-right hand side panel and locate the 1¼" suction gate valve. (It is the largest valve in the unit and is located between the reservoir and compressor.)

Ensure the suction gate valve is fully closed.

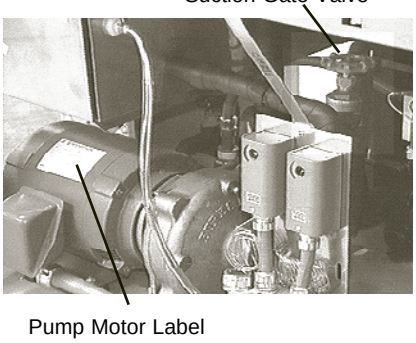

Remove the reservoir cover. Fill the reservoir approximately ¾ full. Start the unit and allow it to run 15 - 20 minutes.

Have enough fluid on hand to fill the unit's reservoir, the recirculation lines to your application, and your application itself.

Slowly open the OUTLET valve. **Opening the valve too quickly will cause water-hammering.**

A qualified technician should ensure the pump amperage draw does not exceed the stated draw on the pump motor label. (Check the amperage using either line 39, 40 or 41 on the motor thermal protector (1TOR) located at the lower left hand corner of the NEMA box.)

As the recirculation lines fill with fluid, keep the reservoir topped off to within one inch of the top. (There could be some substantial splashing from the reservoir as air is purged from the lines.)

While still monitoring the amperage draw, slowly open the INLET valve.

Your application may be started at this time.

As the recirculation lines continue to fill, keep topping off the reservoir.

When the reservoir no longer needs additional fluid, fully open the suction gate valve.

Allow the unit to run 10 to 15 minutes to purge any remaining air.

Ensure the reservoir is filled to within one inch of the top.

Close the reservoir cover.

Install the unit's lower-right hand side panel.

Section IV Operation

Off Cycle

When the unit is manually shut down, a time delay is activated that allows the refrigeration system and the pump to continue to operate. The system will run in the IDLE mode (hot gas by-pass) for two minutes. This additional run time allows all refrigerant to be removed from the heat exchanger and for the heat exchanger to warm up.

NOTE: The unit is equipped with a set of valves on the tank inlet and outlet which prevent the tank from overflowing when the pump is off.

In the event of a fault, the unit will not start the pump-down cycle but will shut down immediately.

Shutting the unit off using a circuit breaker or other device on the line side of the relay will defeat the purpose of the off cycle and is not recommended. If remote operation is desired contact our service department.

Start Up (non-Remote units)

Ensure the door latch arm (disconnect) has been secured for at least 12 hours.

Partially open the COOLING WATER INLET and OUTLET by turning the valve handles counterclockwise.

Turn ON OFF REMOTE switch to ON and push the START switch.

The unit has a time delay that bypasses the Low Pressure Cutout and allows the unit to run for approximately three minutes, regardless of the amount of pressure in the refrigeration system. If the unit runs for three minutes, then shuts down, a refrigeration leak may be present. Contact our Customer Service Department for assistance.

Remote (Optional)

The unit can be operated using an optional remote monitoring/controlling device. Follow the safety precautions and installation procedures outlined in Electrical Connections for the proper installation instructions.

To operate from a remote device, turn the ON OFF REMOTE switch to the REMOTE position.

Temperature Adjustment

The temperature controller is located below the control panel on the left side of the electrical enclosure.

To adjust the temperature setpoint, the system needs to be on, circulating cooling fluid, and under a heat load. Press and hold the SETPOINT button. Turn the ADJUST knob until the temperature setpoint is indicated on the TEMPERATURE °C display. Turn the knob counterclockwise to raise the temperature setpoint and clockwise to lower the temperature setpoint. Release the SETPOINT button. The TEMPERATURE °C display will indicate the operating temperature.

The temperature controller range is from +10°C to +25°C.

If for some reason the unit stops, allow at least 2 minutes for “Reset” before attempting restart.

Flow Rate

Adjust the flow rate to the system being cooled by turning the COOLING WATER OUTLET valve. Use a flow meter on the COOLING WATER OUTLET to adjust the desired flow rate.

High and Low Temperature Cutout

The High and Low Temperature Cutouts (HTC/LTC) monitor the temperature of the cooling fluid as it exits the heat exchanger. They prevent the cooling fluid from reaching excessively high or low temperatures that can damage the unit.

In the event of a high temperature fault, the REFRIG and PUMP lamps will go out, and the unit will shut down. The unit will remain off and must be manually restarted.

In the event of a low temperature fault, the REFRIG lamp will go out and the compressor will shut down. The compressor will remain off until the cooling fluid temperature rises above the cut off point.

The HTC is set at +80°F (+27°C). The LTC is set at +25°F (-6°C). If adjustments are needed, contact our Customer Service Department for assistance.

High and Low Pressure Cutout

The High and Low Pressure Cutouts (HPC/LPC) monitor the refrigeration pressure at the compressor. They prevent excessively high or low pressures that can damage the unit. In the event of a high pressure fault, the REFRIG and PUMP lamps will go out and the unit will shut down until the refrigeration pressure drops below the cut in point.

During a low pressure fault, the REFRIG lamp is out and the compressor and discharge fans shut down until the refrigeration pressure rises above the cut in point.

Oil Pressure Cutout

In the event of low compressor oil pressure, the Oil Pressure Cutout will shut down the compressor and the discharge fans.

After the failure has been corrected, the cut out must be reset. Push the Oil Pressure Cutout Reset button located next to the compressor (see Figure 2).

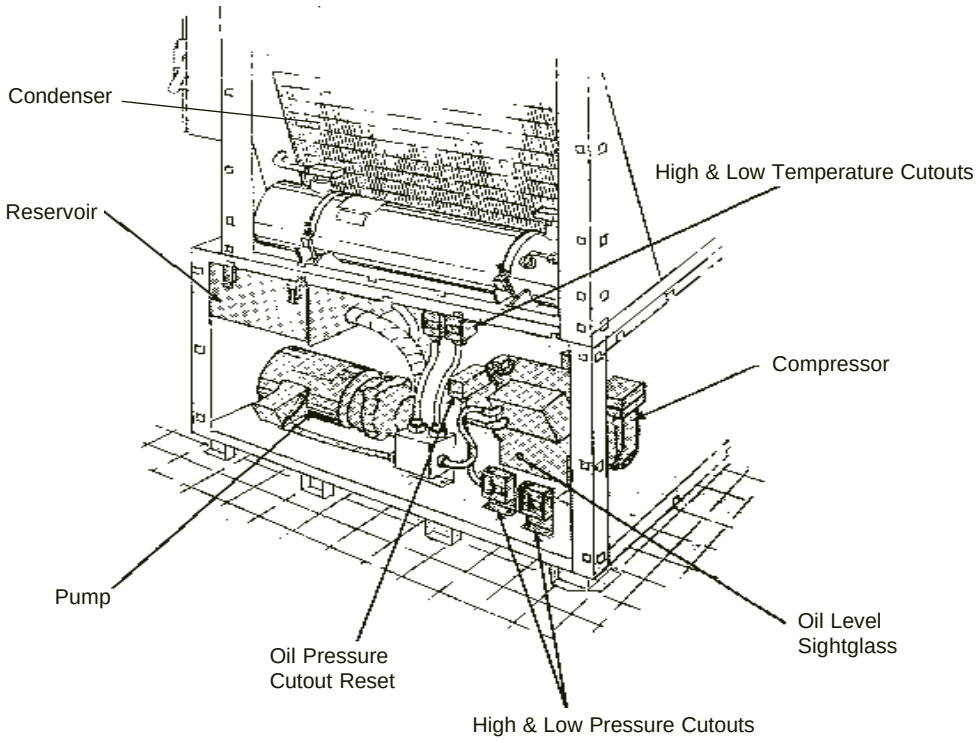

NOTE: Refrigerant Sightglass is located on the other side of the unit (opposite to the compressor).

Section V Safety Features

Safety Features

The unit is equipped with the following safety features designed to protect the unit in case of failure. LED lamps are mounted on the control panel on the electrical enclosure, and indicate operational status.

Low Fluid Level

The Low Fluid Level monitor is connected to a float switch in the reservoir. If the reservoir level drops below a safe operating level, the LOW LEVEL lamp will light, but the unit will not shut off.

Pump

In the event of any of the following conditions, the PUMP lamp will go out and the unit will shut down. The failure must be identified and corrected before the unit can be restarted.

- Loss of circulating flow, in the event of pump failure or ruptured pump lines.

- Pump motor thermal overload.

- High cooling fluid temperature (adjustable).

- High refrigeration pressure.

Refrigeration

In the event of any of the following conditions, the REFRIG lamp will go out and the compressor and discharge fans will shut down. The pump/circulating system will remain operating until the ON OFF REMOTE switch is manually turned OFF, or until the operating temperature reaches the High Temperature Cutout setting. This allows a temporary supply of cooling fluid to the instrument being cooled until the instrument being cooled can safely be turned off.

- Low compressor oil pressure.

- Low refrigeration pressure.

- Low cooling fluid temperature (adjustable).

- Compressor motor thermal overload.

In the event of any of the following conditions, the REFRIG lamp will go out and the unit will shut down:

- High refrigeration pressure.

- High cooling fluid temperature (adjustable).

If your unit fails to operate properly, contact our Customer Service Department for assistance.

Section VI Maintenance

Service Contracts

NESLAB offers on-site Service Contracts that are designed to provide extended life and minimal down time for your unit. For more information, contact our Customer Service Department.

Compressor Oil

Check the compressor oil level after 24 hours of operation. The minimum oil level is ½ full. If the level is lower, contact our Customer Service Department.

Cleaning

A build up of dust and debris on the condenser can cause a loss of cooling capacity. Periodically clean the condensers by removing the expanded metal grilles and blowing compressed air through the condensers or by hosing them down with water. The frequency of cleaning depends on the operating environment.

Parts List

Our Customer Service Department can provide you with a complete list of spare parts for your unit. Phone numbers and addresses for all our NESLAB Sales Centers are located in the front of this manual (see Preface, After-sale Support). Before calling, please obtain the following information:

BOM number

Serial number

WARRANTY

NESLAB Instruments, Inc. warrants for 12 months from date of shipment any NESLAB unit according to the following terms.

Any part of the unit manufactured or supplied by NESLAB and found in the reasonable judgment of NESLAB to be defective in material or workmanship will be repaired at an authorized NESLAB Repair Depot without charge for parts or labor. The unit, including any defective part must be returned to an authorized NESLAB Repair Depot within the warranty period. The expense of returning the unit to the authorized NESLAB Repair Depot for warranty service will be paid for by the buyer. NESLAB's responsibility in respect to warranty claims is limited to performing the required repairs or replacements, and no claim of breach of warranty shall be cause for cancellation or recision of the contract of sales of any unit.

With respect to units that qualify for field service repairs, NESLAB's responsibility is limited to the component parts necessary for the repair and the labor that is required on site to perform the repair. Any travel labor or mileage charges are the financial responsibility of the buyer.

The buyer shall be responsible for any evaluation or warranty service call (including labor charges) if no defects are found with the NESLAB product.

This warranty does not cover any unit that has been subject to misuse, neglect, or accident. This warranty does not apply to any damage to the unit that is the result of improper installation or maintenance, or to any unit that has been operated or maintained in any way contrary to the operating or maintenance instructions specified in NESLAB's Instruction and Operation Manual. This warranty does not cover any unit that has been altered or modified so as to change its intended use.

In addition, this warranty does not extend to repairs made by the use of parts, accessories, or fluids which are either incompatible with the unit or adversely affect its operation, performance, or durability.

NESLAB reserves the right to change or improve the design of any unit without assuming any obligation to modify any unit previously manufactured.

THE FOREGOING EXPRESS WARRANTY IS IN LIEU OF ALL OTHER WARRANTIES, EXPRESSED OR IMPLIED, INCLUDING BUT NOT LIMITED TO WARRANTIES OR MERCHANTABILITY AND FITNESS FOR A PARTICULAR PURPOSE.

NESLAB'S OBLIGATION UNDER THIS WARRANTY IS STRICTLY AND EXCLUSIVELY LIMITED TO THE REPAIR OR REPLACEMENT OF DEFECTIVE COMPONENT PARTS AND NESLAB DOES NOT ASSUME OR AUTHORIZE ANYONE TO ASSUME FOR IT ANY OTHER OBLIGATION.

NESLAB ASSUMES NO RESPONSIBILITY FOR INCIDENTAL, CONSEQUENTIAL, OR OTHER DAMAGES INCLUDING, BUT NOT LIMITED TO LOSS OR DAMAGE TO PROPERTY, LOSS OF PROFITS OR REVENUE, LOSS OF THE UNIT, LOSS OF TIME, OR INCONVENIENCE.

This warranty applies to units sold in the United States. Any units sold elsewhere are warranted by the affiliated marketing company of NESLAB Instruments, Inc. This warranty and all matters arising pursuant to it shall be governed by the law of the State of New Hampshire, United States. All legal actions brought in relation hereto shall be filed in the appropriate state or federal courts in New Hampshire, unless waived by NESLAB.

HX-500 Outdoor Industrial Recirculating Chiller

NESLAB Manual P/N U00163
Rev. 06/10/97

Installation, Operation, and Maintenance Manual

NESLAB online

Product Service Information, Electronic Catalog, Applications Notes, MSDS Forms, e-mail.

(603)427-2490

Set modem to 8-N-1 protocol, 1200 - 14400 baud

Voice Info: (800) 4-NESLAB

Comments on this manual can be sent to:

NESLAB@lifesciences.com

or visit our Web page at:

http://www.neslabinc.com

HX-500 Recirculating Chiller
Installation, Operation, and Maintenance Manual

Table of Contents

PREFACE

Unpacking 3
Warranty 3
After-sale Support 3

SECTION I
Safety

Warnings 4

SECTION II
General Information

Description 5
Specifications 6

SECTION III
Installation

Site 7
Electrical Requirements 8
Plumbing Requirements 9
Fluids 10
Filling Requirements 10

SECTION IV
Temperature Control

Thermostatic Mixing Valve 11
Refrigeration 11
Start Up 11
Cold-Ambient Start Up 11
Temperature Adjustment 12
Fault Response 13

SECTION V
Operation

Flow Control 13
Pressure Gauge 13
Pump Motor Overload Protector 13
External Pressure Regulator (Optional) 14

SECTION VI
Maintenance & Service

Service Contracts 15
Configuration 15
Condenser Cleaning 15
Algae 15
Phase Rotation 16

SECTION VII
Troubleshooting

Checklist 17
Service Assistance 17

SECTION VIII
Diagrams

Refrigeration Flow 18
Pump Flow 19
Wiring 20
Spare Parts List 21

SECTION IX

Warranty

Preface

Unpacking

Retain all cartons and packing material until the unit is operated and found to be in good condition.

On units with a remote control box, the box is packed in a separate carton. Be sure to locate this separate carton; do not dispose of it by mistake.

If the unit shows external or internal damage, or does not operate properly, contact the transportation company and file a damage claim. Under ICC regulations, this is your responsibility.

Warranty

The unit has a warranty against defective parts and workmanship for one full year from date of shipment. Refer to the last page of this manual for complete warranty details.

After-sale Support

NESLAB is committed to customer service both during and after the sale. If you have questions concerning the operation of your unit or the information in this manual, contact our Sales Department. If your unit fails to operate properly or if you have questions concerning spare parts or Service Contracts, contact our Service Department.

Before calling, please refer to the serial number label on the rear of the case top to obtain the following information (see Section II, Description for the serial number label location):

- BOM number _____

- Serial number _____

Section I Safety

Warnings

Make sure you read and understand all instructions and safety precautions listed in this manual before installing or operating your unit. If you have any questions concerning the operation of your unit or the information in this manual, contact our Sales Department for assistance (see Preface, After-sale Support).

Performance of installation, operation, or maintenance procedures other than those described in this manual may result in a hazardous situation and may void the manufacturer's warranty.

Transport the unit with care. Sudden jolts or drops can damage the refrigeration lines.

Do not attempt to defeat any of the interlock switches or safety features built into the unit.

Observe all warning labels.

Never remove warning label.

Never operate damaged or leaking equipment.

Never operate the unit without cooling fluid in the fluid reservoir.

Make sure the unit is off before connecting or disconnecting the power cord or other cables.

Always turn off the unit and disconnect the power cord from the power source before performing any service or maintenance procedures, or before moving the unit.

Always empty the fluid reservoir before moving the unit.

Never operate equipment with damaged power cords.

Refer service and repairs to a qualified NESLAB technician.

In addition to the safety warnings listed above, warnings are posted throughout the manual. These warnings are designated by an exclamation mark inside an equilateral triangle with text highlighted in bold. Read and follow these important instructions. Failure to observe these instructions can result in permanent damage to the unit, significant property damage, or personal injury or death.

Section II General Information

Description

The HX-500 Recirculating Chiller is designed to provide a continuous flow of cooling fluid at a constant temperature and volume. The unit consists of an air-cooled refrigeration system, a stainless steel fluid reservoir, a fluid recirculation pump, and a thermostatic temperature controller.

Throughout the manual, you will be asked to consult the unit's serial number label, or the pump identification label, or both, for specific information. Both labels are located on the unit's right side.

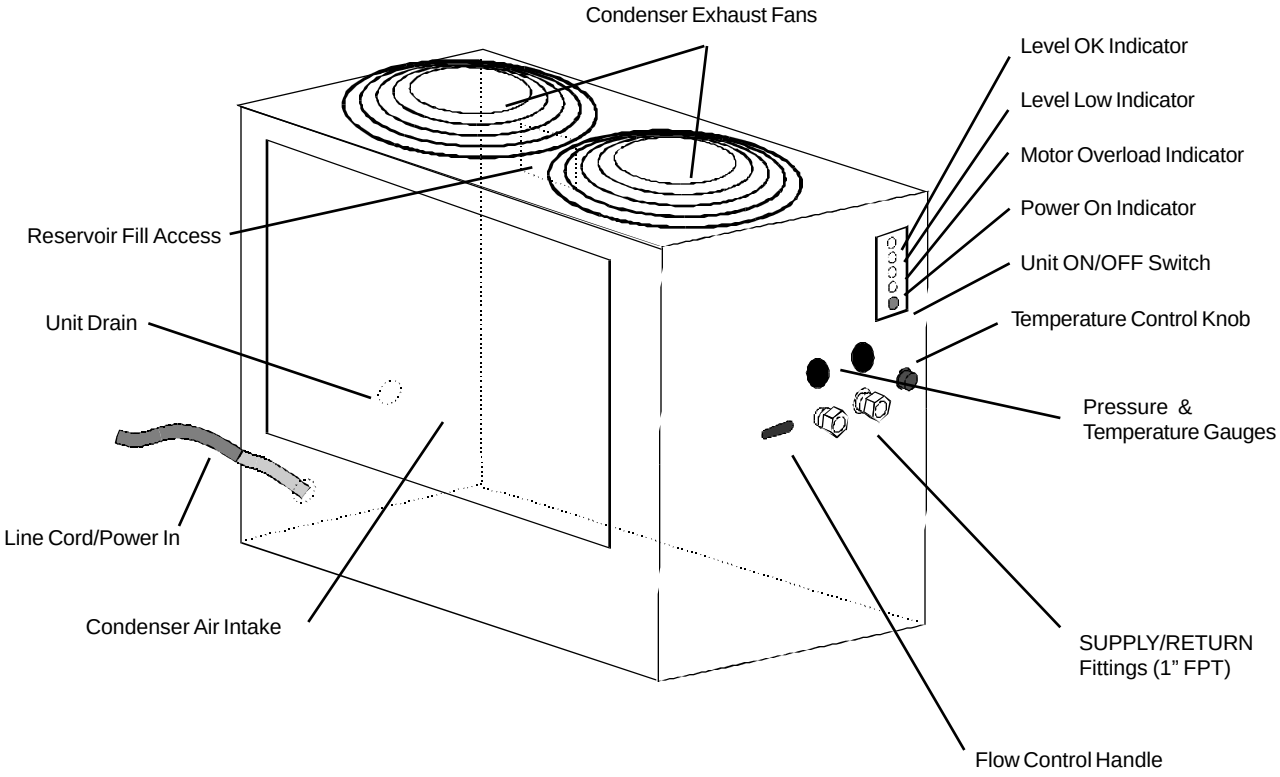

Specifications

Temperature Range	+10°C to +30°C
Cooling Capacity (60Hz) *Watts* *BTU/Hr*	15700 @ 20°C 53500 @ 20°C
CP-55 Pumping Capacity	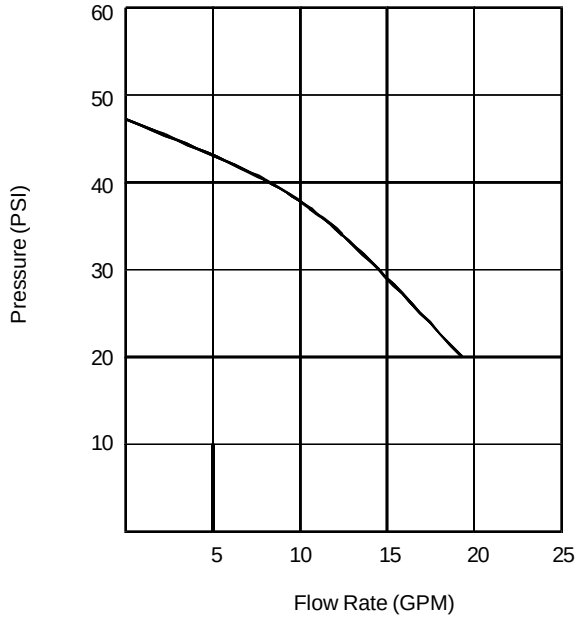
Unit Dimensions[2] (H x W x D) *Inches* *Centimeters*	59½ x 46½ x 29½ 151.1 x 118.1 x 75.0
Reservoir Volume *Gallons* *Liters*	8 30
Shipping Weight *Pounds* *Kilograms*	900 408

Section III Installation

Site

The unit should be located on a well constructed level surface in a clean environment where ambient temperatures are inside the range of -20°F to +110°F (-29°C to +43°C).

The unit will retain its full rated capacity in ambient temperatures to 110°F.

Never place the unit in a location where excessive heat or corrosive materials are present.

The unit has an air-cooled refrigeration system. It must be positioned so the air intake and discharge are not impeded. Air is drawn through the front of the unit and discharged through the top. A minimum of 5 feet (1.5 meters) on the front of the unit is necessary for ventilation.

In some applications where space is at a premium, the minimum ventilation clearance can be compromised. However, consult our Sales Department before positioning the unit in a location with less minimum clearance than listed above. Inadequate ventilation will cause a reduction in cooling capacity and, in extreme cases, compressor failure.

Excessively dusty areas should be avoided and a periodic cleaning schedule should be instituted (see Section VI, Condenser Cleaning).

The illustration below shows the bolt pattern for the unit's base.

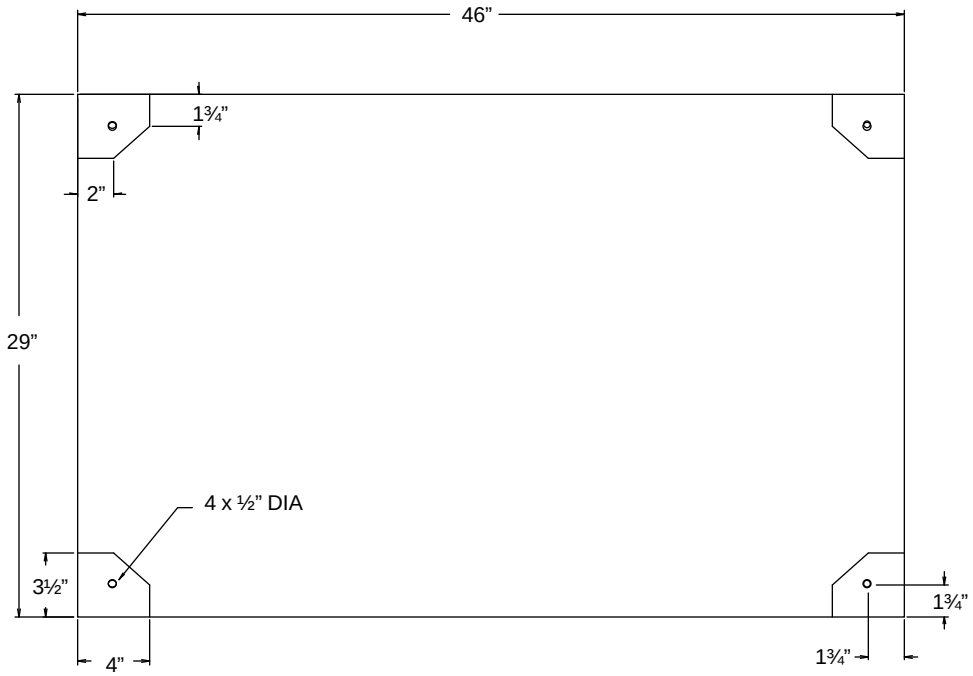

Electrical Requirements

The unit construction provides extra protection against the risk of electric shock by grounding appropriate metal parts. It is the user's responsibility to assure a proper ground connection is provided.

Verify electrical requirements by reviewing the ratings listed on the nameplate on the unit's right side. Ensure the voltage of the power source agrees with the unit's voltage and frequency rating. The unit is designed to tolerate deviations of ±10% from the rated line voltage.

A line cord must be installed on the unit. Remove the unit's left side panel and bring the line cord through the strain relief located on the unit's base. Remove the electrical enclosure cover. Pass the line cord through the second strain relief located on the top of the electrical enclosure. A large terminal strip, labelled 1TB, is used to make the proper connections. Connect L1, L2 and L3 to the corresponding labelled connections on the terminal strip. The ground connection is located at the base of the enclosure.

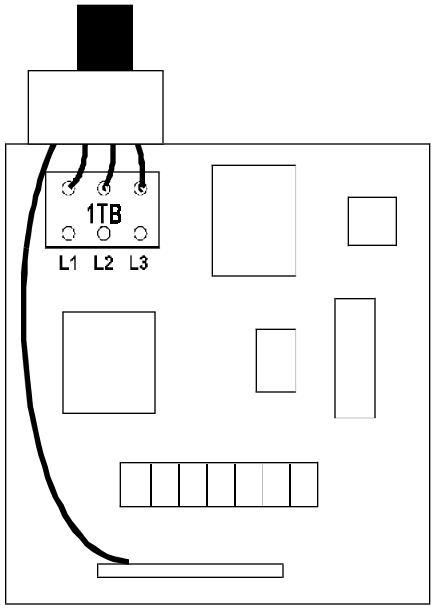

Install the unit in conformance with National Electric Code, UL, and all other local, state and federal electrical codes. Check all wiring to ensure it is both properly connected and protected from the elements.

Units are equipped with a compressor crankcase heater. The crankcase heater warms the oil in the compressor and prevents refrigerant from mixing with the oil. Before start up, the unit must be connected to its power source for at least 12 hours. This allows time for the oil to be heated and separate from the refrigerant. The unit is equipped with a receiver heater which warms the refrigerant for cold-ambient starting.

NOTE: Whenever power is applied, the unit's POWER ON indicator will be illuminated.

Plumbing Requirements

Before installing the unit to an instrument that previously used tap water as a cooling fluid, flush the instrument several times to remove any rust or scale that has built up. Consult the manufacturer of the instrument for a cleaning fluid recommendation.

The plumbing fittings used to connect the HX to the instrument being cooled are located on the right side of the unit (labelled SUPPLY and RETURN). These connections are 1 inch FPT.

Remove the protective plugs from the SUPPLY and RETURN connections. Connect the SUPPLY fitting to the inlet of the instrument being cooled. Connect the RETURN fitting to the outlet of the instrument being cooled.

The RESERVOIR DRAIN connection, located on the bottom left of the unit, is a ½ inch FPT fitting connected internally to the unit's fluid reservoir. This fitting is for draining the reservoir. The unit is shipped with a ½ inch MPT plug installed in this fitting. Remove the plug to drain the reservoir.

If the unit is "hard plumbed" to the instrument being cooled or to the cooling water supply, damage can occur if the unit is bumped or jolted from its site. Provisions should be made to prevent the unit from being moved after installation. Once the unit is plumbed, the unit may be attached to the floor using lag bolts. There are ½" holes provided on the unit's feet.

Flexible tubing, if used, should be heavy wall or reinforced construction. All tubing should be rated to withstand 110 psi at +35°C. Make sure all tubing connections are securely clamped. Avoid running tubing near radiators, hot water pipes, etc. If substantial lengths of tubing are necessary, insulation may be required to prevent loss of cooling capacity.

Tubing and insulation are available from NESLAB. Contact our Sales Department for more information (see Preface, After-sale Support).

It is important to keep the distance between the unit and the instrument being cooled as short as possible, and to use the largest diameter tubing practical. Tubing should be straight and without bends. If diameter reductions must be made, they should be made at the inlet and outlet of the instrument being cooled, not at the HX.

If substantial lengths of connecting tubing are required, they should be pre-filled with cooling fluid before connecting them to the unit.

Fluids

The selected cooling fluid must have a viscosity of 50 centistokes or less at the lowest operating temperature.



Never use flammable or corrosive fluids with this unit. Distilled and deionized water may be aggressive and cause material corrosion. Please contact NESLAB before subjecting this unit to prolonged exposure to distilled or deionized water.

Tap water is the recommended fluid for operation from +8°C to +35°C.

Below +8°C or in an outdoor environment where temperatures may drop below 0°C, a non-freezing solution is required. A 50/50 mixture, by volume, of water and laboratory grade ethylene glycol is suggested.



Do not use automobile anti-freeze. Commercial anti-freeze contains silicates that can damage the pump seals. Use of automobile anti-freeze will void the manufacturer's warranty.

Filling Requirements

Before filling, ensure the unit's reservoir drain plug is properly installed.

The reservoir cover is located under the fill access panel located on the rear of the unit. Open the panel, loosen and remove the cover.

Initially fill the reservoir with five gallons of cooling fluid and then turn the unit on. Continue to fill the fluid reservoir with cooling fluid until the green LEVEL OK indicator illuminates.

The fluid capacity of the instrument being cooled and the recirculation lines may be significant. To prevent the lowering of the fluid level in the reservoir below the operating level, have extra cooling fluid on hand to keep the reservoir filled to just below the hand guard.

When the recirculating system is full, replace the reservoir cover and close the access panel.

Perform periodic checks of the fluid level by checking the LEVEL OK indicator.

Section IV Temperature Control

Thermostatic Mixing Valve

The unit uses an adjustable Thermostatic Mixing Valve (TMV) for temperature control. The valve balances the unit's refrigeration capacity against any applied heat load to maintain the desired temperature. As the heat load changes, the shift in balance will cause the temperature to vary and the valve to adjust in response.

For start up we recommend the valve be set to the maximum position (full clockwise). After your application is on adjust the valve to the desired temperature. If your application is momentarily shut off the temperature of the coolant will drop. NOTE: As long as the valve is not readjusted the coolant temperature will return to the desired setting when the application is turned on.

Because refrigerant capacity varies with ambient temperature, adjust the valve for changes in ambient temperatures.

Refrigeration

The refrigeration system is not adjustable. Factory preset mechanical refrigeration valves limit the refrigeration upper and lower limits. These valves should be adjusted only by a qualified NESLAB service technician.

Start Up

Before starting the unit, double check all electrical and plumbing connections and ensure the recirculating system (the HX, your application, and the tubing connecting them) has been properly filled with cooling fluid (see Section V, Flow Control).

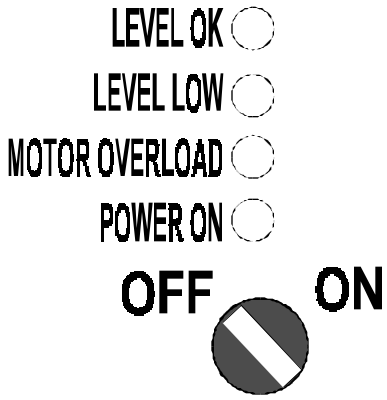

The unit's MAIN POWER indicator illuminates to indicate the unit's main power circuit is energized. To start the unit, place the ON/OFF switch to the ON position. The pump and refrigeration will start and the LEVEL and MOTOR OVERLOAD indicators will be operational. Check the pump for proper rotation (see Phase Rotation in Section VI).

Cold-Ambient Start Up

A temperature sensor located in the reservoir keeps the refrigerant compressor off until the reservoir temperature reaches 0°C. Above 0°C the compressor and condenser fans energize. NOTE: The pump motor operates as soon as the ON/OFF switch is placed to the ON position.

Temperature Adjustment

Adjust the temperature by turning the TMV adjustment knob. Turning the knob clockwise increases the unit's cooling capacity. After adjusting the knob wait two to three minutes for the unit to respond. Readjust as necessary to achieve the desired temperature. The temperature gauge next to the knob provides coolant temperature reading.

Fault Response

All the fault indicators are located above the ON/OFF switch. The unit is designed to run under all fault conditions. Two fault conditions are monitored - low reservoir and pump motor overload.

The red LEVEL LOW indicator indicates the reservoir level has dropped below the low level switch. Add fluid to the reservoir.

The yellow MOTOR OVERLOAD indicates the pump motor overload relay has tripped. The relay is located in the electrical enclosure, immediately behind where the power cord enters the unit. Open the enclosure and depress the relay reset. **NOTE:** With a MOTOR OVERLOAD fault there is no circulation of coolant to your application (see Pump Motor Overload Protector in Section V).

Section V Operation

Flow Control

The RECIRCULATING FLOW CONTROL handle, located on the right-hand side of your unit, is connected to a valve that controls the flow rate of the cooling fluid to the instrument being cooled.

When the handle is in the “+” position, the valve is open and all possible cooling fluid is supplied to the instrument being cooled. When the handle is in the “-” position, the valve is closed and no cooling fluid is supplied to the instrument being cooled. When the handle is between these two positions, the flow rate of the cooling fluid is between full flow and no flow. Use a flow meter on the SUPPLY line to adjust the desired flow rate.



To prevent “water hammering” always move the flow control handle slowly.

Pressure Gauge

The RECIRCULATING PRESSURE gauge is located near to the flow control handle. The gauge indicates the operating pressure of the system.

Pump Motor Overload Protector

Three phase units with three phase pump motors are equipped with a pump motor overload protector. The overload protector prevents the pump motor from exposure to excessive current. If an overload fault occurs, due, for example, to excessive pressure or flow, or excessive ambient temperature, the overload protector will shut off the pump motor. The unit’s compressor will continue to operate. The fault must be manually reset after the cause is identified and corrected (see Preface, After-sale Support).

The overload relay (with reset switch) is located in the main electrical enclosure. The indicator, located above the ON/OFF switch, illuminates when a fault is detected.

External Pressure Regulator (Optional)

For applications requiring a maximum pressure less than 55 psi, an External Pressure Reducer (EPR) is available. An EPR allows an adjustable operating pressure of 10 to 50 psi. If the pressure of the fluid leaving the unit exceeds the valve setting the relief valve will bypass the fluid back into the unit to relieve the pressure. The pressure of the system is determined by the back pressure of the connected equipment and the flow rate of the recirculating fluid to your application.

Connect the EPR assembly as shown below. Tighten the hose clamps tight enough to prevent leakage. Do not overtighten or the clamps will “bite” into the flexible tubbing and can cause excessive wear.

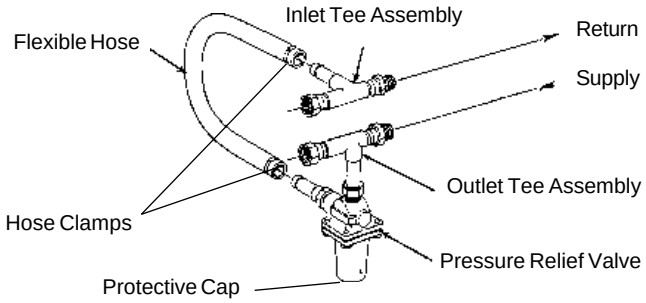

Connect the outlet tee assembly to the inlet of your application. Connect the inlet tee assembly to the outlet of your application.

Adjustment

When adjusting the relief valve some leaking may occur, place a container under the valve during adjustment.

Remove the protective cap and locate a threaded fitting with a slot for a large screwdriver. Hold the threaded fitting in place and loosen the lock nut on the valve body until it is almost flush with the threaded fitting. Unscrew the threaded fitting three to four turns. (If the threaded fitting unscrews completely from the valve housing, screw it back in two to three turns.)

To simulate blockage, close (or pinch off) the hose between the EPR outlet tee assembly and your application. Monitor the operating pressure of the HX unit. Turn the threaded fitting until the desired relief pressure is set (the EPR valve cannot be set lower than the total back pressure of your instrument, or flow will not be received).

Tighten the locknut to secure the position of the threaded fitting. Open the hose between the EPR outlet tee assembly and your application.

Section VI Maintenance & Service

Service Contracts

NESLAB offers on-site Service Contracts that are designed to provide extended life and minimal down-time for your unit. For more information, contact our Service Department (see Preface, After-sale Support).



For personal safety and equipment reliability, the following procedure should only be performed by a qualified technician. Contact our Service Department for assistance (see Preface, After-sale Support).

Configuration

Service Access Panels

Three service access panels (one on the rear, one on the right side and one on the left) allow easy access to the pump and refrigeration assemblies.



Disconnect the unit from its power source before removing any of the access panels.

Condenser Cleaning

For proper operation, the unit needs to pull substantial amounts of air through a finned condenser. A build up of dust or debris on the fins of the condenser will lead to a loss of cooling capacity.

The frequency of cleaning depends on the operating environment. It is recommended that a visual inspection of the condenser be made monthly after initial installation. After several months, the frequency of cleaning will be established.



Exercise caution not to damage the condenser fins or coil. Condenser fin or coil damage can result in a loss of performance and, in extreme cases, refrigeration system failure.

Algae

To restrict the growth of algae in the fluid reservoir, it is recommended that the reservoir cover be kept in place and that all recirculation lines be opaque. This will eliminate the entrance of light which is required for the growth of most common algae.

NESLAB recommends the use of Chloramine-T, one gram per gallon.

Phase Rotation



Check the pump for proper rotation.

Disconnect the unit from its power source, open the rear electrical junction box. Reverse any two line conductors on the line side of the relay.



Never remove the green ground wire.

Close the electrical box. Reconnect the unit to its power source. If the unit will not start, contact our Customer Service Department.

Section VII Troubleshooting

Checklist

Unit will not start

Verify main power circuit is energized. The white Main Power light on the controller panel should be lit when the unit is energized.

Some units are equipped with a flow switch. On these units the flow control valve must be opened slightly to allow the fluid to circulate through the flow switch that monitors the flow rate. A flow rate of more than 0.3 gallons per minute (1.0 liters per minute) is necessary. If the flow is completely shut off, or if flow is not adequate, a low flow fault will occur and the unit will not start.

The phase rotation may be reversed (see Section VII, Phase Rotation).

Check power source for correct voltage output. Refer to the serial number label on the rear of the unit for the specific electrical requirements of your unit. Power source must be specified voltage, ±10%.

The unit has high and low refrigeration pressure switches which require manual reset if activated. Both switches are located directly behind the rear panel. Depress the reset button located on each switch. If the button does not “click” when pressed the switch was not activated and the unit shut down for another reason.

Unit will not circulate fluid

Check the tubing between the unit and your application for obstructions or for cleaning/replacement.

The unit will not circulate if the back pressure of your application is too high (>50psi).

Inadequate temperature control

Make sure the installation of the unit is in compliance with the conditions described in Section III.

Make sure the heat load of the instrument being cooled is not greater than the cooling capacity of the unit.

Service Assistance

If, after following these troubleshooting steps, your unit fails to operate properly, contact our Service Department for assistance (see Preface, After-sale Support). Before calling, please obtain the following information:

- BOM number
- Serial number

Section VIII Diagrams

Refrigeration Flow Diagram

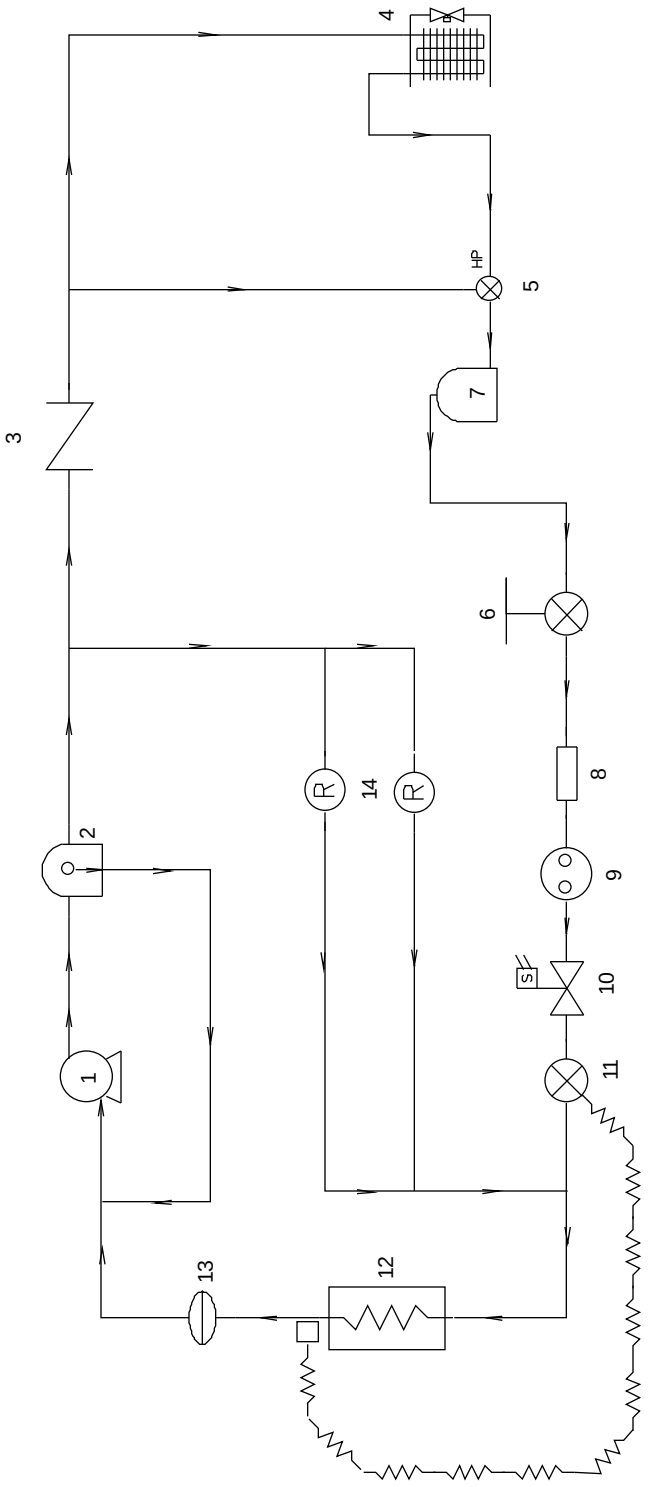

Symbol	Quantity	Part #	Description
14	2	009164	ADR HE-6 Bypass Valve
13	1	009327	Suction Filter
12	1	009295	Evap. Plate CB-26/70 TXV
11	1		
10	1	009624	Sol. Valve
9	1	009604	Sight Glass
8	1	009627	Dryer
7	1	009850	Receiver
6	1		Base Valve
5	1		Head Pressure Control
4	1	007601	Condenser
3	1	009530	Check Valve
2	1	009791	Oil Separator
1	1	007746	Compressor

Pump Flow Diagram

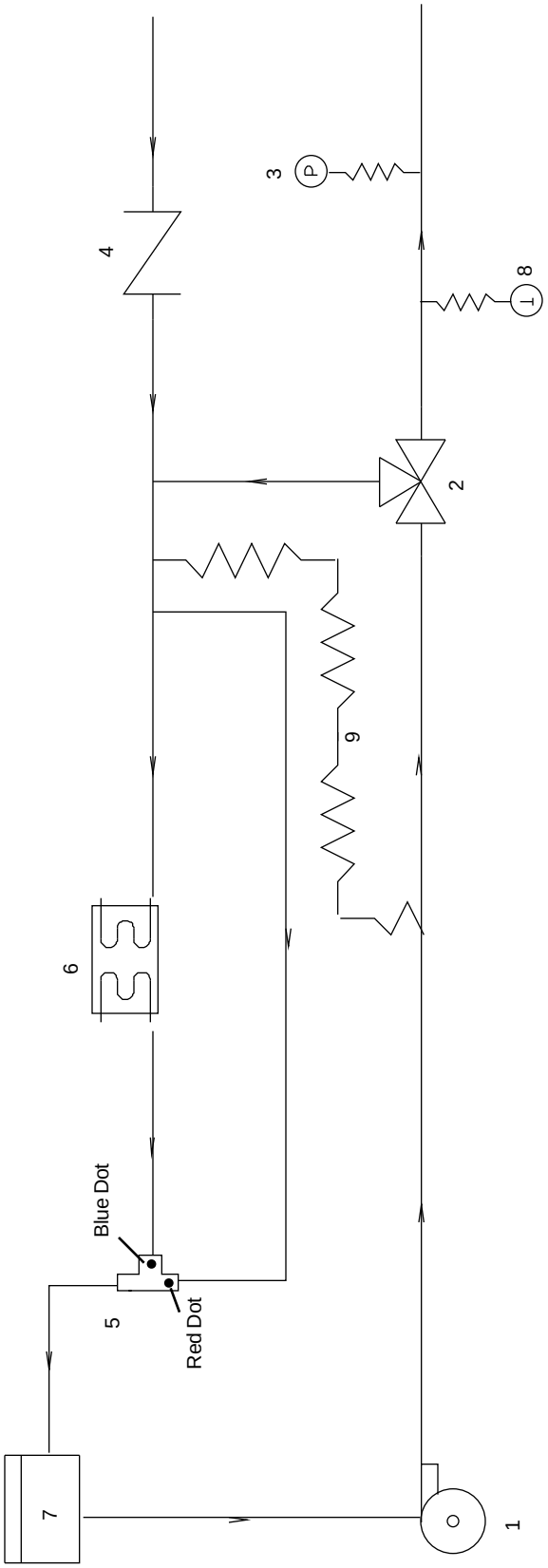

Symbol	Quantity	Part #	Description
9	2 Ft	012122	Cap Tube 0.085 ID
8	1	000989	Temp Gauge, Analog
7	1		Tank, 8 Gallon
6	1	See RA	Evap, Plate CB26/70
5	1		Mixing Valve, Thermostatic
4	1	008901	Check Valve, ¾" SWT
3	1	009212	Press Gauge, 0-100psi
2	1	003156	Valve, 3-way
1	1	008596	Pump, CP-55

Wiring Diagram

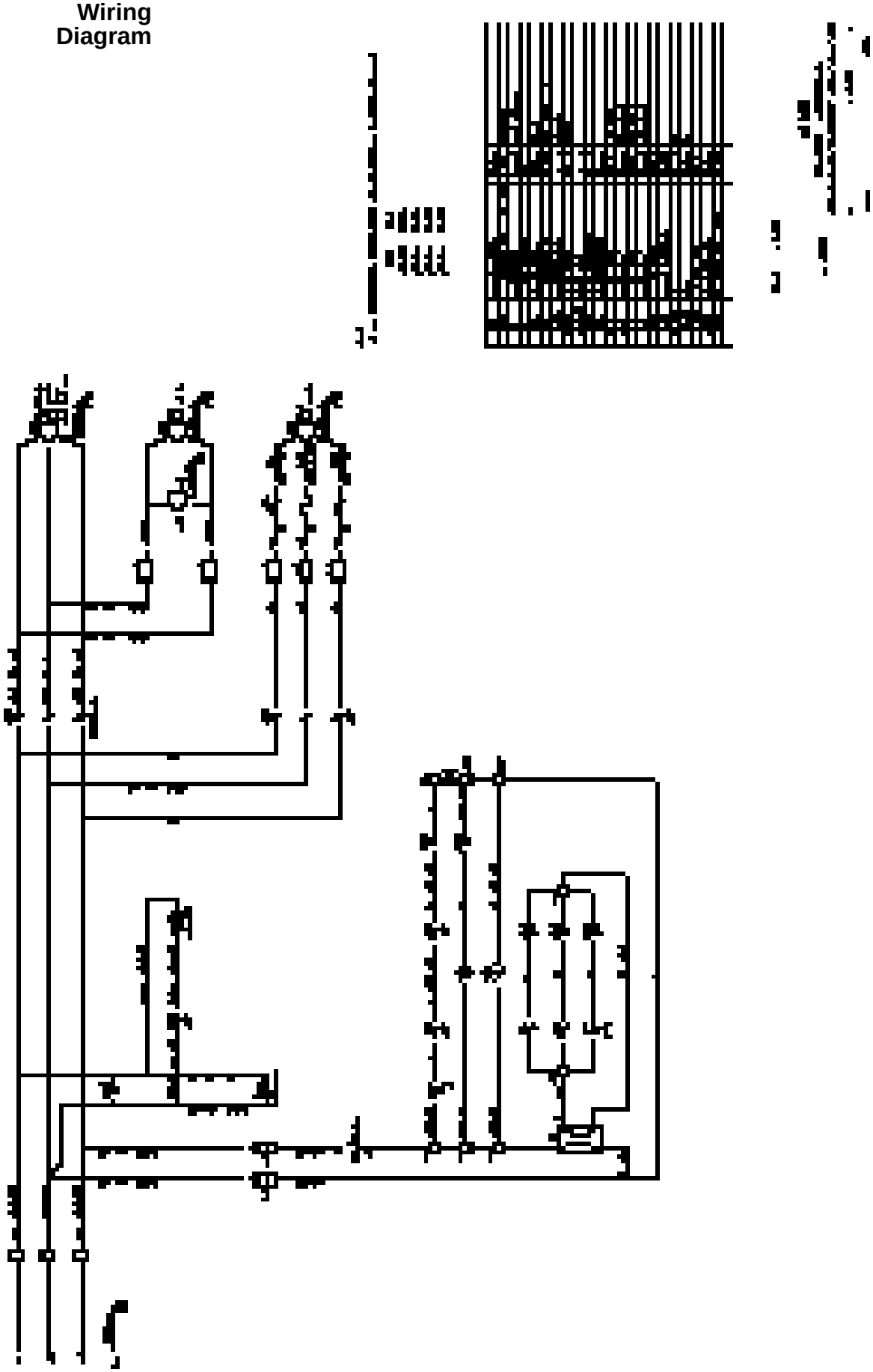

Spare Parts List

Condenser	007848
High Pressure Switch (Auto Reset)	005866
Crankcase Heater	001898
Compressor, 5 Ton, R134a	007746
Head Pressure Control Valve	007849
Hot Gas Bypass Valve	009164
TXV	007850
Fan Motor	007851
Dual HPC/LPC (Manual Reset)	007852
Solenoid Valve, ½" ODF	009624
Solenoid Valve Coils 220VAC	009015
Suction Filter	009327
Dryer	009627
Fuse, 8A	006031
Fuse, 6A	001143
Temp Gauge/Sensor	000989
3-Way Valve	003156
Hose, 1" ID	004998
Pressure Gauge	009212
Thermal Mixing Valve	024672
Pump, CP-55	008596
Contactor, Compressor	001803
Contactor, Pump	006062
Switch, On/Off	006311

WARRANTY

NESLAB Instruments, Inc. warrants for 12 months from date of shipment any NESLAB unit according to the following terms.

Any part of the unit manufactured or supplied by NESLAB and found in the reasonable judgment of NESLAB to be defective in material or workmanship will be repaired at an authorized NESLAB Repair Depot without charge for parts or labor. The unit, including any defective part must be returned to an authorized NESLAB Repair Depot within the warranty period. The expense of returning the unit to the authorized NESLAB Repair Depot for warranty service will be paid for by the buyer. NESLAB's responsibility in respect to warranty claims is limited to performing the required repairs or replacements, and no claim of breach of warranty shall be cause for cancellation or recision of the contract of sales of any unit.

With respect to units that qualify for field service repairs, NESLAB's responsibility is limited to the component parts necessary for the repair and the labor that is required on site to perform the repair. Any travel labor or mileage charges are the financial responsibility of the buyer.

The buyer shall be responsible for any evaluation or warranty service call (including labor charges) if no defects are found with the NESLAB product.

This warranty does not cover any unit that has been subject to misuse, neglect, or accident. This warranty does not apply to any damage to the unit that is the result of improper installation or maintenance, or to any unit that has been operated or maintained in any way contrary to the operating or maintenance instructions specified in NESLAB's Instruction and Operation Manual. This warranty does not cover any unit that has been altered or modified so as to change its intended use.

In addition, this warranty does not extend to repairs made by the use of parts, accessories, or fluids which are either incompatible with the unit or adversely affect its operation, performance, or durability.

NESLAB reserves the right to change or improve the design of any unit without assuming any obligation to modify any unit previously manufactured.

THE FOREGOING EXPRESS WARRANTY IS IN LIEU OF ALL OTHER WARRANTIES, EXPRESSED OR IMPLIED, INCLUDING BUT NOT LIMITED TO WARRANTIES OR MERCHANTABILITY AND FITNESS FOR A PARTICULAR PURPOSE.

NESLAB'S OBLIGATION UNDER THIS WARRANTY IS STRICTLY AND EXCLUSIVELY LIMITED TO THE REPAIR OR REPLACEMENT OF DEFECTIVE COMPONENT PARTS AND NESLAB DOES NOT ASSUME OR AUTHORIZE ANYONE TO ASSUME FOR IT ANY OTHER OBLIGATION.

NESLAB ASSUMES NO RESPONSIBILITY FOR INCIDENTAL, CONSEQUENTIAL, OR OTHER DAMAGES INCLUDING, BUT NOT LIMITED TO LOSS OR DAMAGE TO PROPERTY, LOSS OF PROFITS OR REVENUE, LOSS OF THE UNIT, LOSS OF TIME, OR INCONVENIENCE.

This warranty applies to units sold in the United States. Any units sold elsewhere are warranted by the affiliated marketing company of NESLAB Instruments, Inc. This warranty and all matters arising pursuant to it shall be governed by the law of the State of New Hampshire, United States. All legal actions brought in relation hereto shall be filed in the appropriate state or federal courts in New Hampshire, unless waived by NESLAB.

HX-540
Recirculating Chiller

Thermo NESLAB P/N U00292
Rev. 11/20/00

Instruction and Operation Manual



HX-540 Recirculating Chiller
Instruction and Operation Manual

Table of Contents

PREFACE

Compliance 4
Unpacking 4
NES-care 4
Warranty 4
After-sale Support 4

SECTION I
Safety

Warnings 5

SECTION II
General Information

Description 6
Specifications 6

SECTION III
Installation

Site 8
Facility Water Requirements 8
Electrical Requirements 9
Facility Power Source Configuration 10
3 Phase Monitor 10
Plumbing Requirements 11
Fluids 12
Filling Requirements 12
Pre-Start Up 13

SECTION IV
Operation

Panel Controls 14
Controller Keypad 15
Status Indicators 16
Changing a Value 18
Controller Displays 18
Start Up 22
HG Shut Down Cycle 22
RF Shut Down Cycle 23
Flow Control 23
Flow Transducer 23
High and Low Presure Cutout Switch 23
Differntial Pressure Switch Cutout 23
Compressor Oil Pressure Switch System (Senstronic) 24
Pump Motor Overload Protector 24
External Pressure Regulator (Optional) 25

SECTION V
Maintenance

Service Contracts 26
Cleaning 26
Pump Strainer 26

SECTION VI
Troubleshooting

Displaying Software Version 27
Checklist 27
Service Assistance 28
Flow Diagram 29
Wiring Diagrams 30

APPENDIX A
Interface Definitions

APPENDIX B
Remote Probe Calibration

APPENDIX C
Serial Communications Protocol

APPENDIX D
Programming Software

WARRANTY

HX-540 Quick Reference Operating Procedures

Installation

Position the unit in a clean environment with easy access to facility cooling water and a drain. The facility water requirements must meet those specified in the instruction manual or unit performance will be derated. Inadequate water supply could cause the compressor to overheat and turn the unit off.

Ensure the voltage of the power source meets the specified voltage, ±10%.

The plumbing connections are located on the rear of the unit and are labelled FACILITY WATER INLET and OUTLET, and RECIRCULATING FLUID INLET and OUTLET. Remove the plastic protective plugs from all the plumbing connections. Connect the FACILITY WATER INLET fitting to the facility cooling water and the FACILITY WATER OUTLET fitting to a drain. Connect the RECIRCULATING FLUID INLET fitting to the outlet of your application and the RECIRCULATING FLUID OUTLET fitting to the inlet of your application.

A non-freezing fluid is required for operation at any recirculating or ambient temperatures. The selected fluid must have a viscosity of 50 centistokes or less at the lowest operating temperature.

To fill the reservoir open the access panel on the left rear corner of the case top and remove the reservoir cover by unscrewing the thumbscrews. Fill the reservoir to within two inches of the top when the unit is at the desired operating temperature. If the fluid capacity of your application and recirculation lines are significant, have extra fluid on hand.

Operation

Before starting the unit, ensure the compressor mounting nuts have been loosened and that the facility water is on and properly connected to the unit. Double check all electrical and plumbing connections. Make sure the circulating system has been filled with cooling fluid.

Verify/configure the control transformer position in the power enclosure. Switch on all the enclosure's circuit beakers. Close and latch the enclosure's door.

The unit must be connected to the power source for at least 12 hours to allow the oil to be heated and separated from the refrigerant.

Switch on the main circuit breaker (1CB), press the START button, and then press the ON button located on the controller.

The LEDs on the controller indicate the status of the refrigeration system. Cool is on when the unit is removing heat from the cooling fluid. As the operating temperature approaches the setpoint, the Cool LEDs cycles.

To display the temperature setpoint, while in the Operator's Loop press and NEXT key. To adjust the temperature setpoint use the YES/NO keys as described in this manual.

Flow Control

The RECIRCULATING FLOW CONTROL handle controls the flow rate to your application. In the "+" position you receive full flow, the "-" position is no flow.

Periodic Maintenance

Periodically inspect the reservoir fluid. If cleaning is necessary, flush the reservoir with a cleaning fluid compatible with the circulating system and the cooling fluid.

The cooling fluid should be replaced periodically. When operating at low temperatures, the concentration of water in the cooling fluid will increase over time, leading to a loss of cooling capacity.

The unit has a pump strainer. If debris is in the system, the strainer will prevent the material from being drawn into the pump and damaging the pump vanes.

After initial installation, the strainer may become clogged. The strainer must be cleaned after the first week of installation. After this first cleaning, a monthly visual inspection is recommended. After several months, the frequency of cleaning will be established.

Before cleaning the strainer, disconnect the power cord from the power source and drain the reservoir.

Preface

Compliance

Products tested and found to be in compliance with the requirements defined in the EMC standards defined by 89/336/EEC as well as Low Voltage Directive (LVD) 73/23/EEC can be identified by the CE label on the rear of the unit. The testing has demonstrated compliance with the following directives:

LVD, 73/23/EEC	Complies with UL 3101-1:93
EMC, 89/336/EEC	EN 55011, Class A Verification EN 50082-1:1992 IEC 1000-4-2:1995 IEC 1000-4-3:1994 IEC 1000-4-4:1995

For any additional information refer to the Letter of Compliance that shipped with the unit (Declaration of Conformity).

Unpacking

Retain all cartons and packing material until the unit is operated and found to be in good condition. If the unit shows external or internal damage, or does not operate properly, contact the transportation company and file a damage claim. Under ICC regulations, this is your responsibility.

Warranty

Units have a warranty against defective parts and workmanship for one full year from date of shipment. See back page for more details.

NES-care Extended Warranty Contract

- Extend parts and labor coverage for an additional year.
- Worry-free operation.
- Control service costs.
- Eliminate the need to generate repair orders.
- No unexpected repair costs.

Other contract options are available. Please contact Thermo NESLAB for more information.

After-sale Support

Thermo NESLAB is committed to customer service both during and after the sale. If you have questions concerning the operation of your unit or the information in this manual, contact our Sales Department. If your unit fails to operate properly or if you have questions concerning spare parts or Service Contracts, contact our Service Department.

Before calling, *please* refer to the serial number label on the rear of the case top to obtain the following information:

- BOM number _____

- Serial number _____

- Software version (see page 46) _____

Section I Safety

Warnings

Make sure you read and understand all the instructions and safety precautions listed in this manual before installing or operating your unit. If you have any questions concerning the operation of your unit or the information in this manual, contact our Sales Department (see Preface, After-sale Support).

Performance of installation, operation, or maintenance procedures other than those described in this manual may result in a hazardous situation and may void the manufacturer's warranty.

Transport the unit with care. Sudden jolts or drops can damage the refrigeration lines.

Observe all warning labels.

Never remove warning labels.

Never operate damaged or leaking equipment.

Always disconnect the line cord from the power source before performing any maintenance procedures, or before moving the unit.

Never operate equipment with damaged line cords.

Refer service and repairs to a qualified Thermo NESLAB technician.



In addition to the safety warnings listed above, warnings are posted throughout the manual. These warnings are designated by an exclamation mark inside an equilateral triangle with text highlighted in bold print. Read and follow these important instruction. Failure to observe these instruction can result in permanent damage to the unit, significant property damage, or personal injury or death.

Section II General Information

Description

The HX-540 Recirculating Chiller is designed to provide a continuous flow of cooling fluid at a constant temperature and pressure.

The unit consists of a water-cooled refrigeration system, stainless steel reservoir, recirculating pump, and a microprocessor controller.

An important characteristic of the unit is its ability to track a set temperature virtually independent of changing heat loads. Once the desired operating temperature is set, the operating temperature will not shift more than a few tenths of a degree.

Specifications

Cooling Capacity[1]	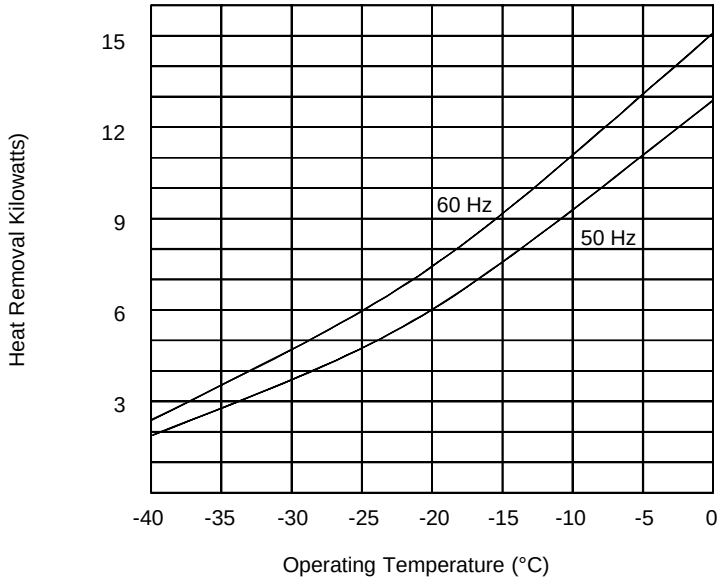
Temperature Range	-40°C to +25°C
Temperature Stability	±0.5°C
Fluid Capacity[2] *Gallons* *Liters*	 5 19

1. Specific heat of cooling fluid is 0.6 BTU/lb°F.
2. Total fluid volume of the reservoir, exchanger, and all internal plumbing lines.

Pump Capacity[3]	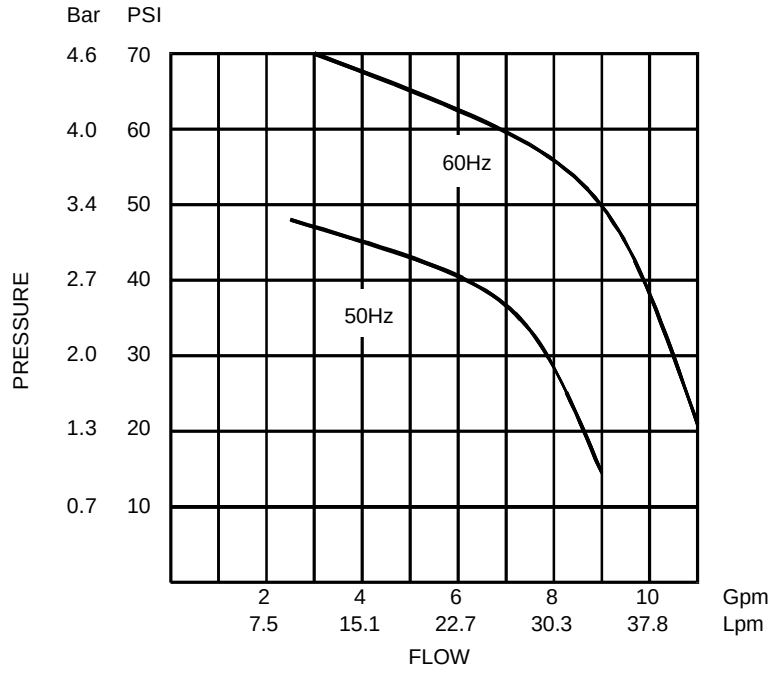
Dimension[4] *(H x W X D)* *Inches* *Centimeters*	44 x 34 x 25.5 111.8 x 86.3 x 64.7
Weight *Pounds* *Kilograms*	915 415

3. Specific gravity is 0.5.
4. Add 9 inches (22.9 cm) to depth for electrical enclosure.

Section III Installation

Site

The unit is designed for indoor operation in a laboratory or clean industrial environment. Ambient temperatures should be in the range of +50°F to +100°F (+10°C to +38°C).

Never install the unit in a location where excessive heat, moisture, or corrosive materials are present.

The unit has a water-cooled refrigeration system. It should be placed in a location with easy access to a facility water source and a drain.

Facility Water Requirements

The facility water must meet or exceed the following requirements for the unit to retain its full rated capacity. If the facility water does not meet these standards, the cooling capacity will be reduced.

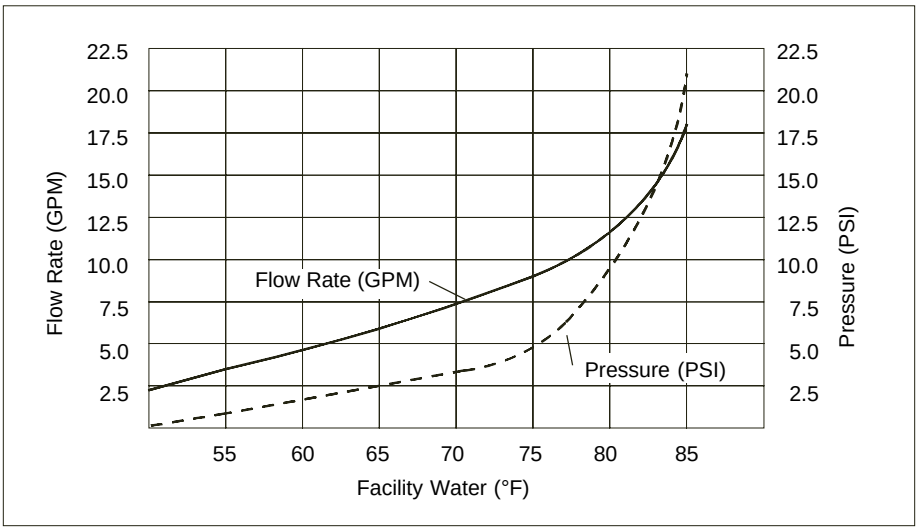

The unit has a water regulating valve located in the FACILITY WATER INLET line. The valve regulates the flow rate of the facility water that passes through the heat exchanger based on the heat load. Flow through the heat exchanger is stopped when the unit turned off. If the facility water temperature or pressure do not meet the specified requirements, contact our Service Department for assistance.

Electrical Requirements

Refer to the serial number label on the rear of the unit to identify the specific electrical requirements of your unit.

Ensure the voltage of the power source meets the specified voltage, ±10%.



All power connections should be made by a qualified electrician.

The facility power source connection is the main 20A circuit breaker (1CB) plus a ground connection. It will operate on a Delta or Wye system, a neutral connection is not required. Ensure an adequate ground connection is provided. Use the ground bar located in the power enclosure as a facility power source ground.

The facility power source connection may be made by removing the panel located on the lower right power enclosure. Use a knockout and the appropriate size conduit fitting for your facility power source requirements.

The unit has an automatic compressor crankcase heater. The crankcase heater warms the oil in the compressor and prevents refrigerant and oil from mixing. Before initial start up, or after storage, the unit should be connected to the power source for at least 12 hours before turning the unit on. This will allow time for the crankcase oil to be heated and the refrigerant to separate from the oil.

Ensure the main 20A circuit breaker (1CB) and the crank case heater (4CB) are on during this 12-hour period. Refer to the unit's wiring diagram for complete details.

NOTE: Some units are equipped with a disconnect power receptacle, IEC 309 plug, and a line cord. Use the appropriate facility power source interface where applicable.

The HX-540 Recirculating Chiller is a three phase unit. The unit is equipped with a phase rotation interlock. This interlock prevents the unit from starting if the phase rotation is wrong. If the unit will not start, see Section VI, Troubleshooting. If the options in the checklist are not applicable, the problem may be phase rotation.

For personal safety and equipment reliability, the following procedure should only be performed by a qualified technician.

For phase reversal, disconnect the unit from the power source. Shut off the main 20A circuit breaker (1CB) and open the power enclosure. Reverse any two line cord leads on the line side of 1CB.

Never remove the green ground wire.

If the unit will not start, contact our Customer Service Department.

Facility Power Source Configuration

Control transformer (1T) must be configured for the appropriate facility power source. Refer to the drawing below and the label located in the power enclosure for details.

For 50/60 Hertz units the jumper wire will be installed between 1TB-1 and 1TB-2. The unit is shipped in this configuration.

When installing the unit the jumper wire should be installed for the appropriate facility power source.

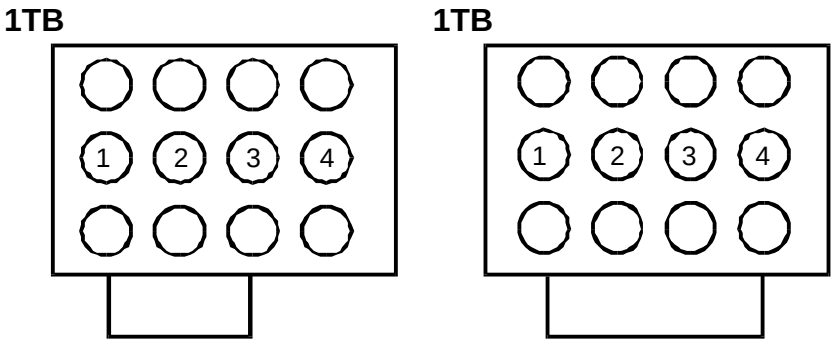

FACILITY MAIN VOLTAGE
RANGE: 420V - 480V
CONNECT 1TB-1 TO 1TB-3

FACILITY MAIN VOLTAGE
RANGE: 360V - 415V
CONNECT 1TB-1 TO 1TB-4

3 Phase Monitor

Check the unit's power requirements on the serial tag located in the power enclosure. For 50 Hertz units the voltage range is 360 - 430 volts. For 60 Hertz the range is 400 - 480 volts. For 50/60 Hertz units there are no voltage adjustment requirements. Set the phase monitor's voltage arrow to the closest nominal facility input voltage. See illustration on next page.

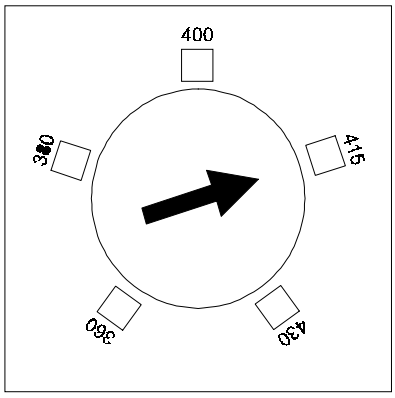

50 Hetrz Units

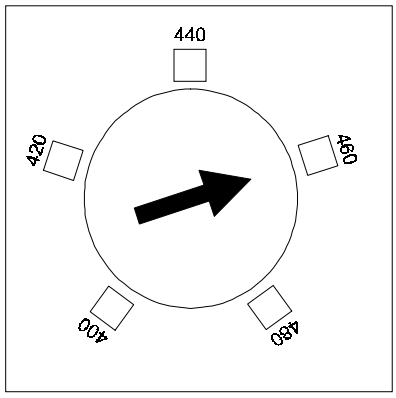

60 Hetrz Units

Plumbing Requirements

The plumbing connections are located at the rear of the unit.

The facility water connections are labelled FACILITY WATER INLET and OUTLET. These connections are 1 inch FPT.

The cooling fluid connections are labelled RECIRCULATING FLUID INLET and OUTLET. These connections are ¾ inch FPT.

Connect the FACILITY WATER INLET to the facility water source.

Connect the FACILITY WATER OUTLET to the drain.

Connect the RECIRCULATING FLUID INLET to the outlet of the instrument being cooled.

Connect the RECIRCULATING FLUID OUTLET to the inlet of the instrument being cooled.

All tubing should be rated to withstand 100 psi. Make sure all tubing connections are securely clamped. Avoid running lines near radiators, hot water pipes, etc. If substantial lengths of tubing are necessary, insulation may be required to prevent loss of cooling capacity. Tubing and insulation are available from Thermo NESLAB. Contact our Sales Department for information.

Before installing the unit to a instrument that previously used tap water as a cooling fluid, flush the instrument several times to remove any rust or scale that has built up. The manufacturer of the instrument should be able to recommend a cleaning fluid to clean their equipment.

It is important to keep the distance between the unit and the instrument being cooled as short as possible, and to use the largest diameter tubing

practical. Tubing should be straight, without bends or kinks. If reductions must be made, they should be made at the inlet and outlet of the instrument being cooled, not at the HX.

An externally mounted flow meter and temperature readout are required with this unit. These monitors will indicate whether the facility water requirements are being met (see Section III, Facility Water Requirements). It is the users responsibility to provide adequate facility water to the unit.

Both devices should be installed in the FACILITY WATER INLET line.

Fluids



A non-freezing fluid is required for operation at any recirculating or ambient temperature. Use a fluid capable of operating at -60°C without freezing.



Due to the physical nature of a plate heat exchanger, and its response to temperature changes, 100% water must not be used as a circulating fluid. Using 100% water may cause the plate heat exchanger to rupture.



Do not use automotive anti-freeze. Commercial anti-freeze contains silicates that can damage pump seals.



Never use flammable or corrosive fluids with this unit.



Highly distilled and deionized water may be aggressive and cause material corrosion. Please contact Thermo NESLAB before subjecting this unit to prolonged exposure to highly distilled or deionized water.

The selected fluid must have a viscosity of 50 centistokes or less at the lowest operating temperature.

Filling Requirements

The fluid capacity of the connecting tubes and your application may be appreciable. Have extra cooling fluid on hand until the entire system is filled.

Thermal expansion and contraction of the cooling fluid must be taken into account when filling the unit. Lift the hinged access panel on the unit's cover. Loosen the two thumbscrews and remove the reservoir cover.

Fill the reservoir with cooling fluid so that the fluid level will be within 2 inches of the top when the unit is at the desired operating temperature.

Replace the reservoir cover. Tighten the thumbscrews. Close the panel.

Pre-Start Up

Remove the two side access panels and the rear access panel (opposite end from the electrical enclosure) to access the compressor area.

Loosen the four compressor mounting nuts. There should be approximately 1/8" clearance between each compression mounting foot and shipping bracket to allow the compressor to "float" on the mounting springs.

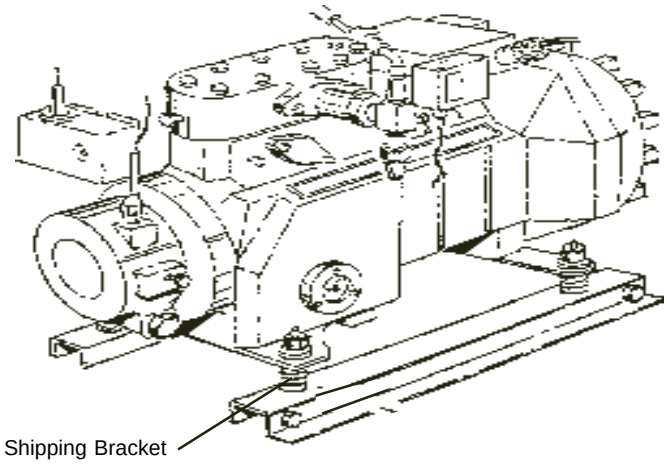

Disconnect facility power to the unit. Shut off the main circuit breaker, 1CB, using the handle located on the right side of the power enclosure.

Open the power enclosure, use a flat blade screw driver on the ¼" fasteners.

Verify and/or configure the unit's control transformer and 3 phase monitor according to the instructions located on the enclosure door or on page 10 of this manual.

Switch on all circuit breakers located in the power enclosure.

Close the power enclosure door and secure the fasteners.

Provide facility power to the unit and switch on 1CB.

Section IV Operation

Panel Controls

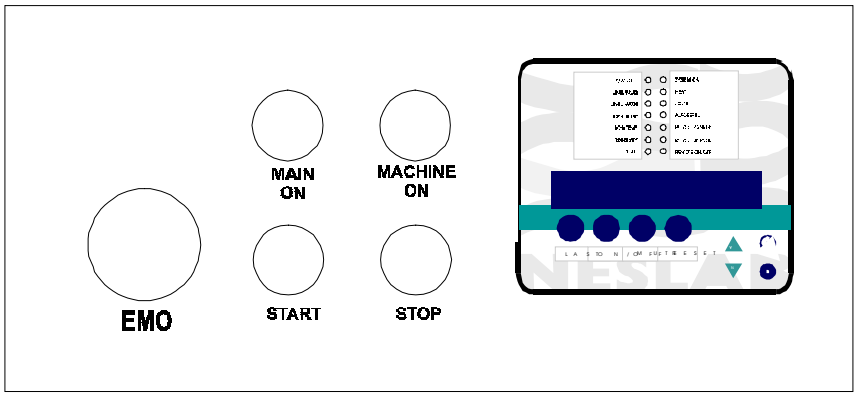

MAIN ON
Indicates facility power is supplied to the unit. Also, the main circuit breaker (1CB) is on, the control circuit breaker (3CB) is on, and the machine on/off circuit breaker (7CB) is on.

MACHINE ON
Indicates the machine control circuit is on.

START
Push to power the machine control circuit. The MACHINE ON indicator will illuminate and the controller will go through a self test. After the self test, the controller will enter a stand-by mode.

STOP
Push to remove power from the machine control circuit. The MACHINE ON indicator will extinguish.

EMERGENCY OFF Button
When pressed, the unit will shut off immediately, bypassing the unit's HG shutdown cycle, see page 22. This button is intended for emergencies only. Do not use it as a normal shut down procedure. The button must be pulled out following an emergency shut down in order to perform the normal start up procedure.

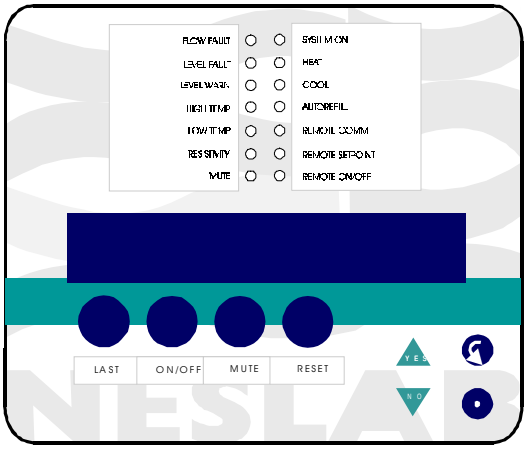

Controller Keypad

The front panel mounted unit/temperature controller allows the operator to start, control and monitor many features of the unit.

LAST
Scrolls backward through the menus and for optional remote operation.

ON/OFF
Energizes/De-energizes process control, pump, compressor, and temperature display.

MUTE
Toggles audible alarm silence function for the current alarm. When alarm is silenced, the MUTE LED lights.

RESET
Clears alarm indications after fault condition has been corrected. Alarm LEDs will remain lit after problem is eliminated to provide indication of problem cause for operator. RESET clears these indicators.

YES, ▲
Answers Yes to Y/N questions, increments numerical values upward for setting numeric values.

NO, ▼
Answers NO to Y/N questions, increments numerical values downward for setting numeric values.

NEXT
Scrolls forward through the menus.

ENTER
Confirms entry of numeric values.

NOTE: If NEXT is pressed while the value still flashes, the new value will not be accepted. The display will stop flashing and the original value will be displayed. In this case the NEXT key can be used to abort data entry. The display will not sequence unless the NEXT key is depressed again.

For large values, the displayed can be changed by manipulating the individual digits. Press YES and NO at the same time, the most significant digit will start to flash. The YES key increments and the NO key decrements the digit. Press the ENTER key to accept the digit and to move to the next most significant digit. Repeat until all digits are entered. Pressing the NEXT key before all digits are entered will abort the procedure and return the display to the original value.

The controller will not allow you to enter a value above the maximum or below the minimum value, or any illegal value. If you try to enter an illegal value the display will revert to its original value when the last digit was entered.

Status Indicators

Units can be configured in one of two ways. Units are designed to either shut down in the case of a fault, Cutout Option (fault condition), or, for those customers willing to take the risk of damage to their unit in order to continue providing all available cooling to their application, a Switches Option (warning condition). Contact our Service Department for more information.

If the Switch Option is chosen, FLOW FAULT, HIGH TEMP, and LOW TEMP ***do not*** shut down the unit but, they are serious conditions and require immediate attention. Once the cause of the fault is identified and corrected, push the controller's RESET button to clear the flashing indication.

NOTE: LEVEL FAULT shuts the unit down immediately. This fault is independent of the switches/cutout option.

Status indicators are provided to show the state of the various functions.

FLOW FAULT indicates the unit flow is too low. The default is 2 gpm. The unit will shut down in the Cutout mode, but will continue to operate in the Switch mode.

LEVEL FAULT indicates the reservoir level is too low for safe operation. The unit will shut down.

LEVEL WARN indicates the reservoir level is below the float switch mounted in the reservoir. The unit will continue to run. **NOTE:** This indication is operable only on units with autorefill.

HIGH TEMP indicates that the reservoir temperature is above the high temperature limit setpoint. The default is 30°C.

For safety reasons, if the unit is configured for the Cutout Option and the HIGH TEMP is set for a value less than the fluid temperature, **the unit will not start.** If required, set the limit after the unit is started.

Should the reservoir go above the high limit setpoint the unit continues to run in the Switch Option, but shuts down in the Cutout Option.

LOW TEMP indicates that the reservoir temperature is below the low temperature limit setpoint. The default is -45°C.

For safety reasons, if the unit is configured for the Cutout Option and the LOW TEMP is set for a value higher than the fluid temperature, **the unit will not start.** If required, set the limit after the unit is started.

Should the reservoir temperature subsequently go below the low limit setpoint the unit continues to run in the Switch Option, but shuts down in the Cutout Option.

RESISTIVITY (Optional) displays measurement value on the controller and a 0-10VDC signal to the analog interface connector on the rear of he unit.

The controller is designed to measure and/or control resistivity. Should the resistivity go above the specific level set in the Setup Loop (see page 20), a warning will be declared.

MUTE indicates the buzzer has been turned off.

SYSTEM ON indicates unit is running.

HEAT (optional) indicates heat capacity is being added to the reservoir system to maintain constant temperature.

COOL indicates the refrigeration system is removing heat from the reservoir system to maintain constant temperature.

As the fluid temperature approaches the temperature setpoint, the COOL indicator cycles on and off to indicate the duty cycle of the system. The unit can be in COOL or HEAT mode, but never both at the same time. A balance between COOL and HEAT controls the temperature.

AUTOREFILL (optional) depends upon configuration of unit to automatically refill the reservoir.

REMOTE COMM (optional) indicates the unit is configured to receive communication via an optional interface located on the side of the electrical enclosure.

REMOTE SETPT indicates the temperature setpoint is being remotely controlled via the J100 INTERFACE on the side of the electrical enclosure.

REMOTE ON/OFF indicates the unit is configured to receive a remote on/off input signal via the J100 INTERFACE on the side of the electrical enclosure.

Changing a Value

The **YES** key increments the value. The **NO** key decrements the value.

The display will flash as soon as either key is depressed, and will continue to flash until the **ENTER** key is pressed to accept the new value. The new value will not be used by the controller until the **ENTER** key is depressed and the display stops flashing.

If the **NEXT** key is pressed while the value is flashing, the new value will not be accepted. The display will stop flashing and the original value will be displayed. In this case the **NEXT** key can be used to abort data entry. The display will not sequence unless the **NEXT** key is depress again.

For large values the display can be changed by manipulating the individual digits. Press the **YES** key and the **NO** key at the same time. The most significant digit will start to flash. The **YES** key increments or the **NO** key decrements the digit. Press the **ENTER** key to accept the digit and to move to the next most significant digit. Repeat until all digits are entered. Pressing the **NEXT** key before all digit are entered will abort the procedure and return the display to the original value.

The controller will not allow you to enter a value below the minimum or above the maximum. If you try to enter an illegal value outside the operating range, the display will revert to its original value.

Controller Displays

An alphanumeric display presents numeric readings of various operating conditions within the chiller. Display function is selected by pressing the appropriate keys to move through a menu of available information.

An Operator's Loop and a Setup Loop loops allow you to display and/or alter different parameters of the controller. The Setup Loop can be accessed from the temperature display by pressing and holding the key combinations shown on Figure 1 on the next page.

When the controller is first powered up it goes through a short self test and then enters the Operator's Loop, displaying the reservoir fluid temperature.

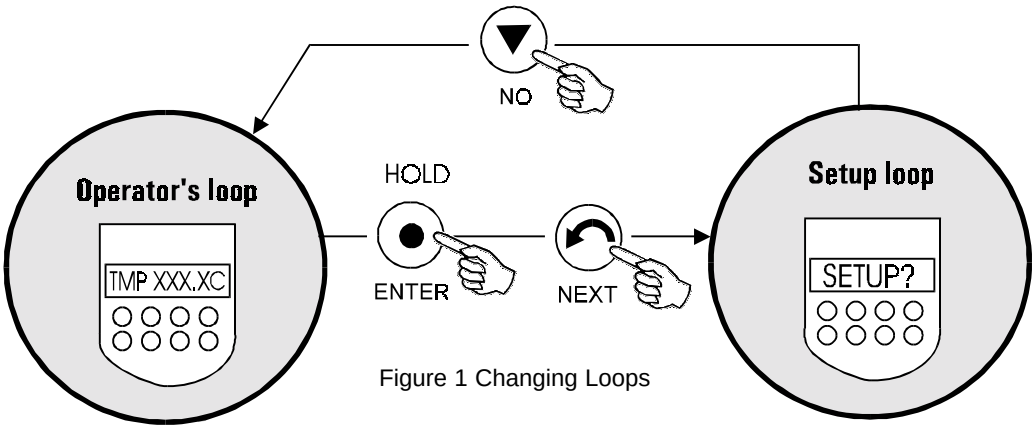

Figure 1 Changing Loops

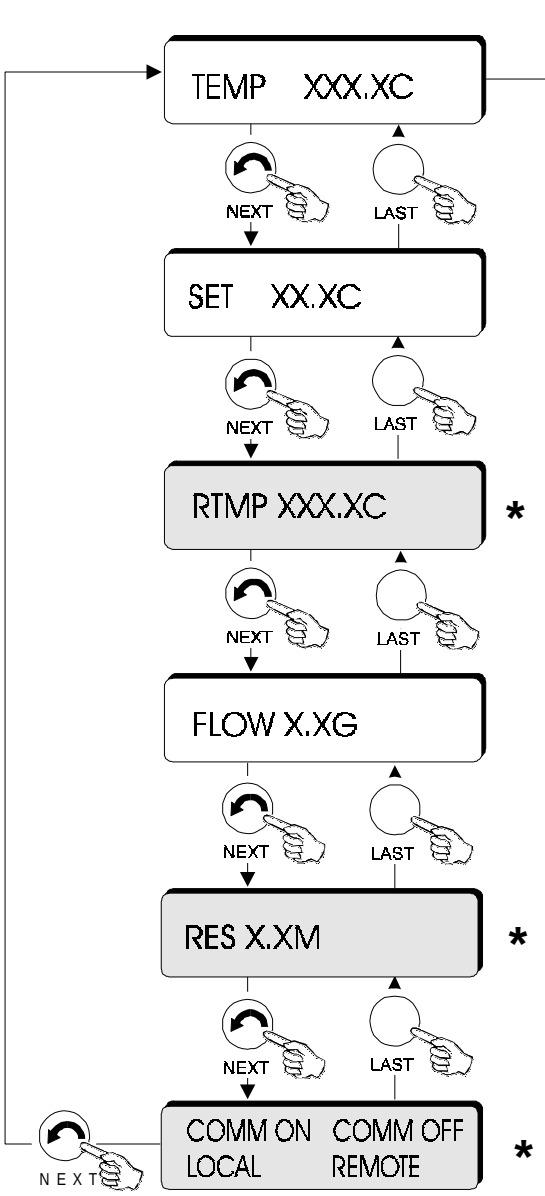

TEMP xxx.xC
This displays the temperature of coolant in the reservoir.

SET xx.xC
This displays the setpoint for temperature control. The chiller's temperature controller causes the fluid temperature to equal this temperature.

RTMP xxx.xC*
For units using the remote probe, this feature displays the application's remote temperature. The application's remote temperature control cannot exceed the unit's operational temperature range ±5°C or the unit will shut down.

FLOW x.xG*
This displays the flow rate at the RETURN port in gallons per minute.

RES x.xM*
This displays the fluid resistivity.

COMM ON*
For units with a remote control box, this displays one of the four possible communication configurations created in the Setup Loop.

* Display is shown only when option is enabled in Configuration Loop, contact our Service Department for assistance.

Figure 2 Operator's Loop

Setup Loop

The setup loop allows the operator to change temperature and flow limits, change resistivity limit (optional), to change the temperature controller's tuning constants, and, for units with a remote control box, to change the communication operations.

NOTE: If the unit is configured for the remote operation option, the temperature limits are for the remote probe. For safety reasons, if the unit's fluid reservoir temperature exceeds 5°C of either end of the unit's temperature range, **the unit will shut down.**

To enter this loop you must be in the Operator's Loop and displaying temperature, see Figure 2. Depress and hold the **ENTER** key then press **NEXT**. Adjust values with the **YES** and **NO** keys. Press **ENTER** for the controller to accept each new entry.

NOTE: Changes are not initiated until they are saved at the end of the loop.

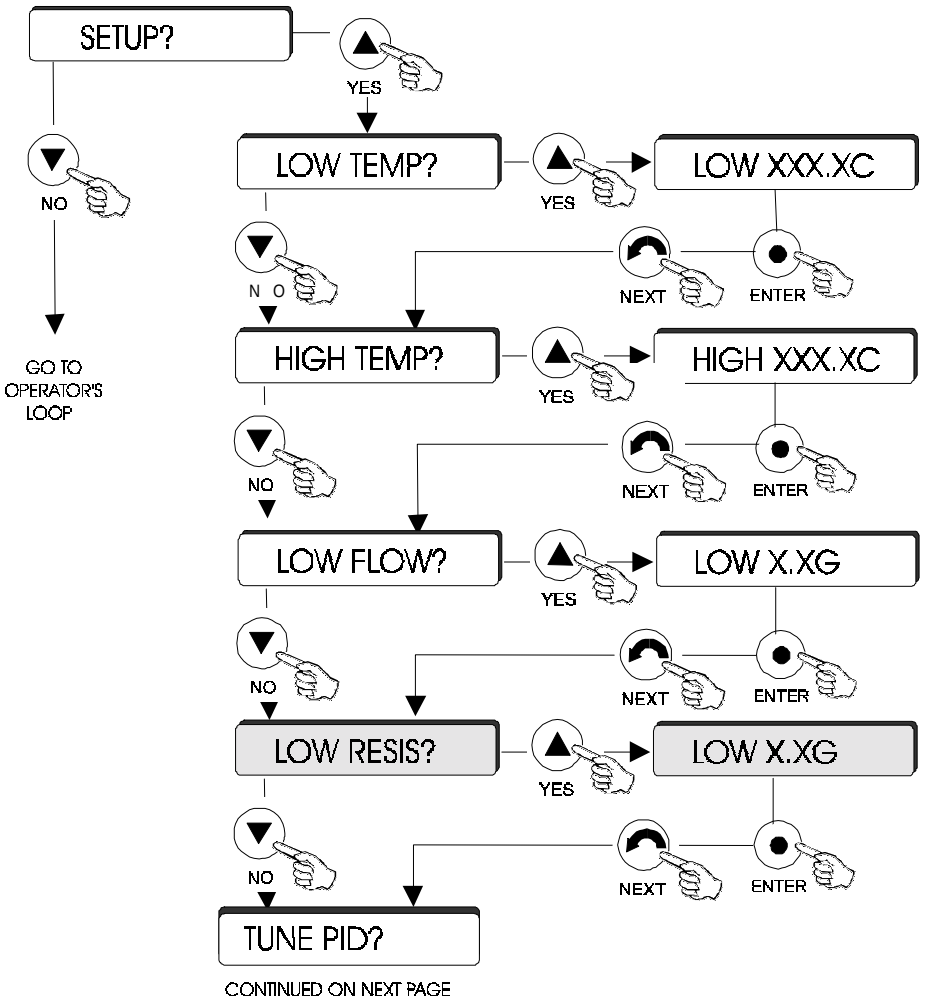

Figure 3 Setup Loop (1 of 2)

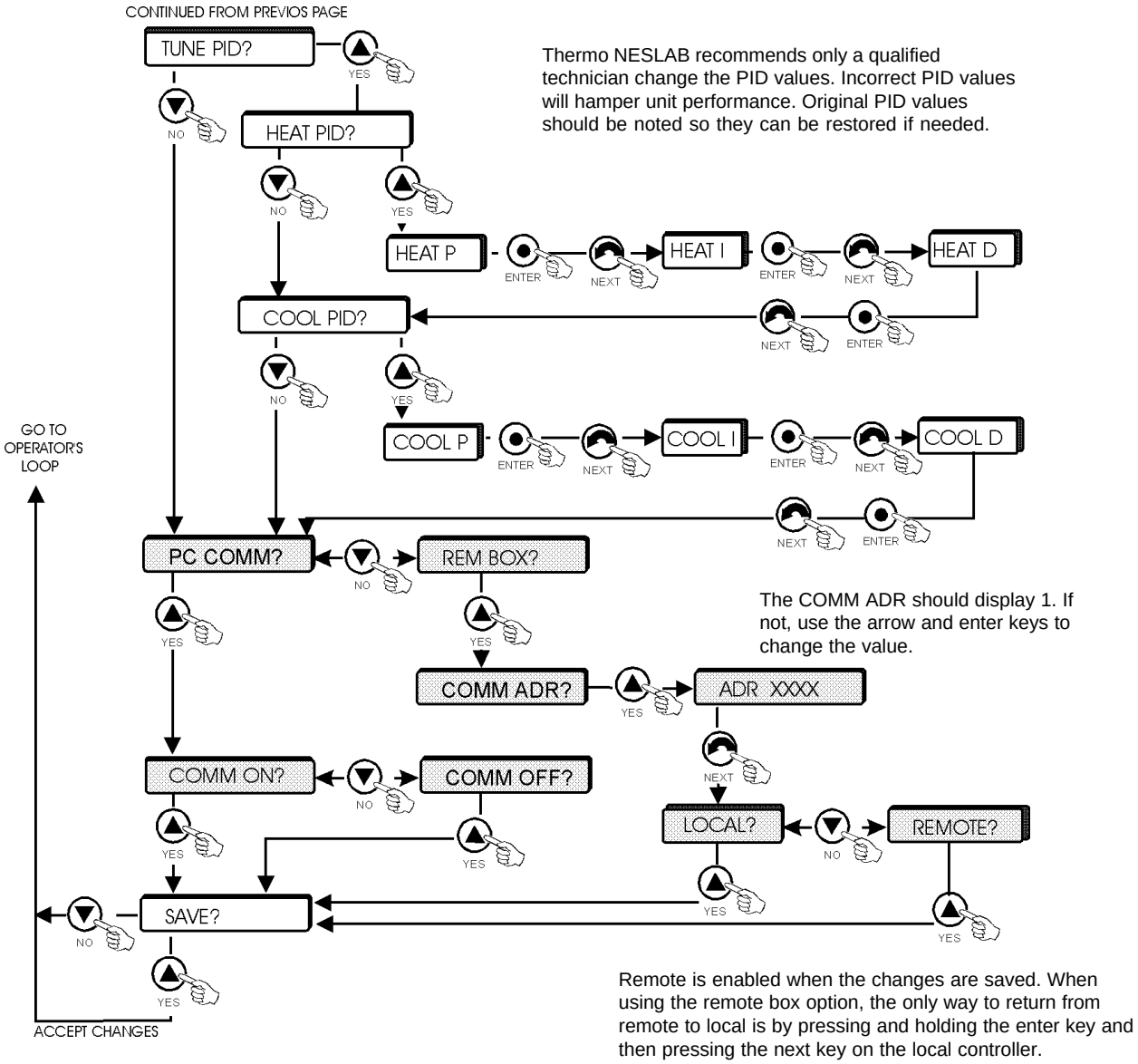

Figure 3 Setup Loop (2 of 2)

NOTE: Should you desire to return to the temperature display and abort *all* changes, keep pressing next until the display reads **SAVE?** Press **NO.**

Start Up



Ensure the facility water is on and make sure the cooling water supply is connected to the TAP WATER connection, not the DRAIN connection.

LOCAL Start Up

Place the LOCAL REMOTE switch to the LOCAL position. Press the ON/OFF key on the temperature controller. The unit will start and the SYSTEM ON indicator will illuminate. The controller will indicate the temperature of the reservoir fluid.

To stop the unit depress the ON/OFF key on the temperature controller.

REMOTE Start Up

Place the LOCAL REMOTE switch to the REMOTE position. This enables the J100 INTERFACE connector located on the side of the electrical enclosure. See Appendix A for details. On the INTERFACE connect pin 1 to pin 14. The unit will start and the SYSTEM ON indicator will illuminate. The controller will indicate the temperature of the reservoir fluid.

To stop the unit disconnect pin 1 from pin 14.

When the unit is shut off, wait approximately five minutes before restarting. This allows time for the refrigeration pressures to equalize. If the pressures are not allowed to equalize, the compressor will short-cycle (clicking sound) and no cooling will occur.

Hot Gas Shut Down Cycle

The Hot Gas (HG) shut down cycle is designed to extend the compressor's life. A shut down cycle allows the compressor and hot gas solenoid valve to continue to run for approximately 30 seconds before the unit shuts down. This additional running time allows the refrigerant in the compressor to be removed and stored.

The following conditions will initiate an HG shut down:

System off from the controller's keypad. **NOTE:** A MACHINE OFF from the panel controls or shutting the unit off using a device (circuit breaker machine off) on the line side of the controller defeats the purpose of the HG cycle and is not recommended. Refer to the unit's wiring diagram.

System off from remote box or serial communications, if applicable.

Refrigeration Shut Down Cycle

The ReFrigeration (RF) shutdown cycle is designed to prevent plate exchanger failure due to ice formation. A shut down cycle allows the compressor and hot gas solenoid valve to continue to run for approximately 30 seconds before the unit shuts down. This additional running time allows the refrigerant to heat the plate exchanger and pump to remove any collected ice.

The following conditions will initiate an RF shut down: Activation of the differential pressure switch.

Flow Control

The flow control handle is located on the right side of the unit. The handle is connected to a valve that controls the flow of fluid to your application. When the handle is in the vertical "**+**" position, the valve is open and all fluid is supplied to your application. When the handle is in the horizontal "**-**" position, the valve is closed and no fluid is supplied to your application. When the handle is between these two positions, the flow rate of the fluid is between full flow and no flow. Use a flow meter on the RECIRCULATING FLUID OUTLET to adjust the desired flow rate.

Ensure the flow control handle is in a slightly open position before starting the unit. Once the unit is running, slowly adjust the handle to the desired flow rate. Never start the unit with the handle in the full closed "**-**" position and never rapidly turn the valve wide open from the closed or slightly open position.

The pressure gauge next to the flow control valve (labelled RECIRCULATING PRESSURE) indicates the operating pressure of the system.

Flow Transducer

A magnetically coupled flow transducer is located in the return line, underneath the unit's top. The flow rate can be displayed on the controller.

High and Low Pressure Switch Cutout

The switches are located in the right, rear of the unit. Remove the rear panel to access the switches.

The high pressure switch monitors the refrigeration pressure on the discharge side of the compressor. In the event of a high pressure fault the compressor will shut down. The compressor will automatically restart once the pressure returns to an acceptable level.

The low pressure switch monitors the refrigeration pressure on the suction side of the compressor. In the event of a low pressure fault the compressor will shut down. The compressor will automatically restart once the pressure returns to an acceptable level.

Differential Pressure Switch Cutout

The switch is located under the top of the unit, below the flow transducer.

The differential pressure switch monitors the pressure differential across the plate exchanger. In the event of an obstruction is present (i.e. ice formation), a fault signal will generate RF shutdown. See Operation for details.

Compressor Oil Pressure Sensing System (Senstronic)

The compressor is equipped with an electronic oil pressure sensing system that monitors the differential pressure between the compressor crankcase and the compressor oil pump. In the event of a fault the compressor will shut down. Once the pressure returns to an acceptable level reset the Senstronic.

Remove the right-lower panel to access the reset.

Pump Motor Overload Protector

An overload protector prevents the pump motor from exposure to excessively high current. If an overload condition occurs, due, for example, to a heavy work load, the overload protector shuts the pump and compressor down. The overload protector automatically resets after approximately two minutes. The source of the overload must be identified and corrected before the pump and compressor will restart.

External Pressure Regulator (Optional)

For applications requiring a maximum pressure less than 55 psi, an External Pressure Reducer (EPR) is available. An EPR allows an adjustable operating pressure of 10 to 50 psi. If the pressure of the fluid leaving the unit exceeds the valve setting the relief valve will bypass the fluid back into the unit to relieve the pressure. The pressure of the system is determined by the back pressure of the connected equipment and the flow rate of the recirculating fluid to your application.

Connect the EPR assembly as shown below. Tighten the hose clamps tight enough to prevent leakage. Do not over-tighten or the clamps will “bite” into the flexible tubbing and can cause excessive wear.

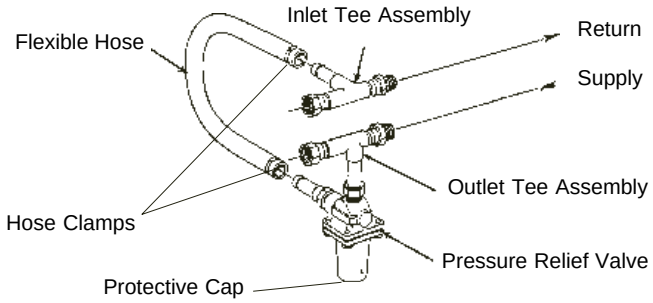

Connect the outlet tee assembly to the inlet of your application. Connect the inlet tee assembly to the outlet of your application.

Adjustment

When adjusting the relief valve some leaking may occur, place a container under the valve during adjustment.

Remove the protective cap and locate a threaded fitting with a slot for a large screwdriver. Hold the threaded fitting in place and loosen the lock nut on the valve body until it is almost flush with the threaded fitting. Unscrew the threaded fitting three to four turns. (If the threaded fitting unscrews completely from the valve housing, screw it back in two to three turns.)

To simulate blockage, close (or pinch off) the hose between the EPR outlet tee assembly and your application. Monitor the operating pressure of the HX unit. Turn the threaded fitting until the desired relief pressure is set (the EPR valve cannot be set lower than the total back pressure of your instrument, or flow will not be received).

Tighten the locknut to secure the position of the threaded fitting. Open the hose between the EPR outlet tee assembly and your application.

Section V Maintenance

Service Contracts

Thermo NESLAB offers on-site Service Contracts that are designed to provide extended life and minimal downtime for your unit. For more information, contact our Service Department. Phone numbers and addresses for all our Sales and Service Centers are located in the front of this manual (see Preface, After-sale Support) and on the back cover of this manual.

Cleaning

Periodically inspect the reservoir. If cleaning is necessary, flush the reservoir with a cleaning fluid compatible with the circulating system and the cooling fluid.

The cooling fluid should be replaced periodically when operating at low temperatures. The concentration of water in the cooling fluid will increase over time, leading to a reduction in the cooling capacity.

Before changing the cooling fluid, raise the operating temperature of the unit to de-ice the reservoir. Refer to Section III, Filling Requirements for instructions on replacing the cooling fluid.

Pump Strainer

A wire mesh pump strainer is located in the reservoir on the pump suction line. If debris is drawn into the reservoir, the strainer will prevent the material from being drawn into the pump and damaging the pump vanes.

Inspect the strainer whenever the reservoir is checked for cleanliness. If the strainer is visibly clogged, cleaning is required.

Disconnect the line cord from the power source and drain the reservoir before cleaning the strainer.

Cover the strainer with a baggie to catch any debris which may become free. Unscrew the strainer and rinse it with water. Replace the strainer. Refer to III, Filling Requirements for instructions on replacing cooling fluid.



Strainer

Section VI Troubleshooting

Displaying Software Version

To display the software version ensure the controller is in the Operator's Loop and displaying the reservoir fluid temperature. Depress and hold the enter key  . Press the YES NO YES keys and the display will indicate CALIBRATE? While continuing to hold the enter key press the YES NO YES keys again. The display will now indicate the software version, for example 000550.63a. Press NO to return to the temperature display.

Checklist

Unit will not start or cycles on and off
For CE Mark units, check the circuit breaker setting on the rear of the bonnet.

Check the position of the EMO button.

Check for a fault condition.

Check the position of the LOCAL REMOTE switch. In REMOTE, check the INTERFACE connection.

Check power source for correct voltage output. Refer to the serial number label on the rear of the unit for the specific electrical requirements of your unit. Power source must be specified voltage, ±10%.

Check house circuit breaker.

On three phase units with three phase pump motors, the phase rotation may be reversed (see Section III, Electrical Requirements).

Ensure the facility water is on and make sure the cooling water supply is connected to the TAP WATER connection, not the DRAIN connection. Check the High Pressure Cutout, it may need to be reset (see Section IV, High and Low Pressure Switch Cutout).

Unit will not circulate.
Check for obstructions or kinks in the tubing between the unit and the instrument being cooled.

Check pressure gauge reading. If reading is “0” with flow, the gauge may be faulty. Verify by placing a second gauge in the RECIRCULATING WATER OUTLET line.

Check pump strainer (see Section V, Pump Strainer).

Check for a pump motor overload.

Inadequate temperature control.
Check installation of unit for compliance with conditions in Section III.

Make sure instrument being cooled has not overcome the cooling capacity of the unit (see Section II, Specifications).

Service Assistance

If, after these troubleshooting steps, your unit fails to operate properly, contact our Service Department.

Our Service Department can provide you with a complete list of spare parts for your HX-540 Recirculating Chiller. Phone numbers and addresses for all our Sales and Service Centers are printed on the back cover of this manual. Before calling, *please* obtain the following information:

BOM number
Serial number
Voltage of unit
Voltage of power source
Temperature of facility water

Appendix A Interface Definitions

J-100 INTERFACE

The LOCAL/REMOTE switch is used to enable the INTERFACE connector located on the side of the electrical enclosure. With the interface enabled the unit can be controlled and monitored with various electronic accessories.

NOTE: Placing the switch to REMOTE without the interface connected will shut down the unit.

PIN	NAME	NOTES	DEFINITION
1	12VDC COMMON		Common for digital inputs (pins 13 and 14)
2	RESISTIVITY OUT		0-10VDC Analog Voltage Output: Reference to pin 6 This voltage output is proportional to the resistivity of the reservoir fluid: 0.5VDC / M-cm. (Ex 9.0V = 18Mohm-cm) (Max Load @ 10V = 5mA)
3	LOW LEVEL	Note 1	Dry Relay Contact: Reference to pin 11. Closes if either level switch is in the “low” position for more than 1 second.
4	TEMP/SENSOR	Note 1	Dry Relay Contact: Reference to pin 11. Closes immediately when any of the following occur: 1. High Temp Fault, 2. High Temp Warn, 3. Low Temp Fault, 4. Low Temp Warn, 5. RTD1 Fault/Warn, 6. RTD2 Fault/Warn, or 7. Resistivity Warn.
5	PUMP ON	Note 1	Dry Relay Contact: Reference to pin 11. Closes immediately when pump is turned on. Opens immediately when pump is turned off.
6	ANALOG GROUND		Common for analog signals (pins 2, 7 and 15)
7	RESERVOIR TEMP OUT		0-10VDC Analog Voltage Output: Reference to pin 6 This voltage output is proportional to the reservoir fluid temperature: Scale = 10mV / ^{O}C. (Ex 200mV = 20°C) (Max Load @ 10V = 5mA) * Optional Range = 0 – 10V (where: 0V = Low Temp Span, 10V = Hi Temp Span) Contact Factory for details
8	LOW FLOW	Note 1	Dry Relay Contact: Reference to pin 11. Closes immediately when a low flow occurs while the pump is on. Note: To allow the pump to get up to speed at startup, the pump is allowed to run for 3 seconds before the low flow sensor is read.
9	FAULT NO	Note 1	Dry Relay Contact: Reference to pin 11. Closes immediately when any of the following faults occur: 1. Low Flow, 2. Low Level, 3. Temp/Sensor, 4. High Pressure Fault, or 5. Heater High Temp Cutout.
10	FAULT NC	Note 1	Dry Relay Contact: Reference to pin 11. Compliment of pin 9 (Open when pin 9 is closed)
11	RELAY COMMON		Common for all relay contacts (pins 3, 4, 5, 8, 9, 10)
12	(Not used)		
13	REMOTE SETPOINT ENABLE		Digital Input: Reference to pin 1. Connect to pin 1 to allow the setpoint to be changed remotely through pin 15 “Remote Setpoint In”.
14	REMOTE ON/OFF		Digital Input: Reference to pin 1. Connect to pin 1 to turn unit on. Disconnect to turn unit off. Note: The front panel LOCAL/REMOTE switch, must be in the REMOTE position to allow operation from this pin.
15	REMOTE SETPOINT IN		Analog Voltage Input: Reference to pin 6 Apply a DC voltage to this pin to adjust the unit’s setpoint: Range = 10mV / ^{O}C. (Ex 200mV = 20°C) (Max Input Voltage = 10VDC, Input Impedance > 600K) * Optional Range = 0 – 10V (where: 0V = Low Temp Span, 10V = Hi Temp Span) Contact Factory for details

Note 1:

All relay contacts (except for Pin 10) are normally OPEN when power is off. Pin 10 contacts are normally CLOSED when power is off. All relay contacts are rated: 250V/3A, <= .08 Ohm.

SENSOR (Optional)

The unit can be configured to have its temperature controlled from a remote location. Temperature is read on the controller's RTMP display. In the Operator's Loop, RTMP is your application's temperature, TEMP indicates the HX's tank temperature.

The remote probe is connected by a 9-pin male "D-sub" located on the rear of the unit. Ensure your remote application does not cause the HX to exceed its temperature range. For safety reasons the HX will shut down if either limit is exceeded by 7°C.

This is a 3-wire RTD probe. It must be calibrated before initial use, see Appendix B.

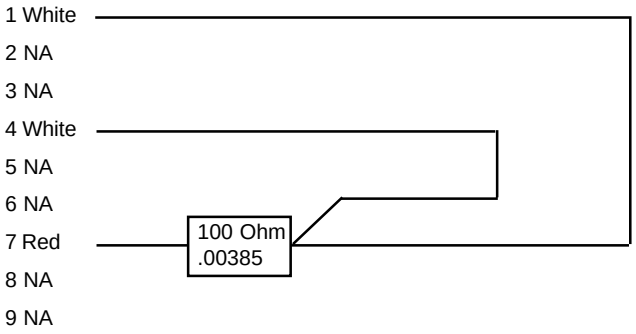

COMM (Optional)

J105 is a 9-pin female "D-sub" located on the side of the electrical enclosure used for remote operation. The unit can be configured to operate from a PC comm or remote box option. For remote box operation/configuration see pages 20-21. For serial communications protocol, see Appendix C. For NEScom software information, see Appendix D.

When using the remote box option, the quickest way to return from remote to local is by pressing and holding the enter key and then pressing the next key on the local controller.

Going from local to remote is not available at the remote box.

The pin out information for either configuration is:

RS-232 (NC com)		RS-485 (Remote Box)	
1	Not used	1	Ground
2	TX	2 -7	Not used
3	RX	8	T+
4	Not used	9	T-
5	Ground		
6-9	Not used		

Appendix B Remote Probe Calibration

Before using the optional remote probe it must be calibrated. This is done by running the unit to its temperature extremes and using the controller's Calibration Loop.

Install the remote probe into the SENSOR 9-pin "D-sub" located on the rear of the unit.

Use the Operator's Loop to run the unit to its high-end temperature limit. When the setpoint is reached press and hold the ENTER key and then press YES-NO-YES to display CALIBRATE? Press YES.

Press NEXT until RMT RTD? is displayed. Press YES to display HI CAL? HI xxx.xC will be displayed, use the YES/NO keys to reach the desired temperature and the press ENTER. Press the NEXT key until SAVE? is displayed, press YES to return to the Operator's Loop.

Use the Operator's Loop to run the unit to its low-end temperature limit. When the setpoint is reached press and hold the ENTER key and then press YES-NO-YES to display CALIBRATE? Press YES.

Press NEXT until RMT RTD? is displayed. Press YES to display HI CAL? Press NO and LOW CAL? is displayed. Press YES and LOWxxx.xC will be displayed, use the YES/NO keys to reach the desired temperature and the press ENTER. Press the NEXT key until SAVE? is displayed, press YES to return to the Operator's Loop.

The probe is now calibrated. Re-calibrate as necessary or if the probe is replaced.

Appendix C Serial Communications Protocol

NOTE: This appendix assumes you have a basic understanding of communications protocols.

All data is sent and received in binary form, do not use ASCII. In the following pages the binary data is represented in hexadecimal (hex) format.

The Thermo NESLAB Serial Communications Protocol, NC, is based on a master-slave model. The master is a host computer, while the slave is the chiller's controller. Only the master can initiate a communications transaction (half-duplex). The slave ends the transaction by responding to the master's query. The protocol uses an RS-232 serial interface with the parameters: 9600 baud, 8 data bits, 1 stop bit and no parity.

NOTE: Before the unit will communicate, RS232 must be turned on in the controller's Setup Loop.

The unit can be controlled through your computer's serial port by using the unit's standard 9-pin RS-232 connection. Data read of the serial port connects to the data transmit (pin 2) of the unit. Data transmit of the serial port connects to data read (pin 3) of the unit.

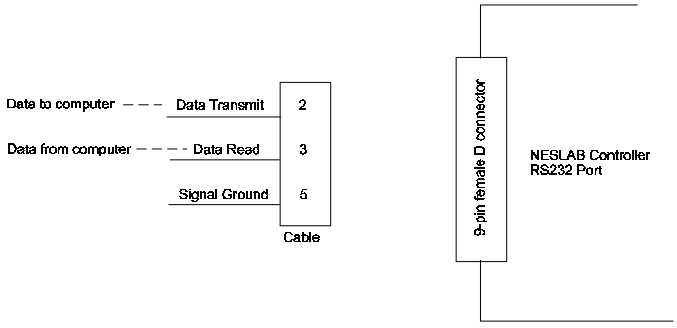

Communication cables are available from Thermo NESLAB. Contact our sales department for additional information.

All commands must be entered in the exact format shown in the tables on the following pages. The tables on the last two page of this Appendix show all commands available, their format and responses. Controller responses are either the requested data or an error message. The controller response *must* be received before the host sends the next command.

The host sends a command embedded in a single communications packet, then waits for the controller's response. If the command is not understood or the checksums do not agree, the controller responds with an error command. Otherwise, the controller responds with the requested data. If the controller fails to respond within 1 second, the host should resend the command.

NC Serial Communications Protocol

NOTE: All byte values are shown in hex, represents the binary values that must be sent to the chiller. **Do not use ASCII.**

The framing of the communications packet in both directions is:

	Checksum region						
Lead char CA	Addr-MSB 00	Addr-LSB 01	Command	n d-bytes	d-byte 1 …	d-byte n	Checksum

Lead char	CA (hex).
	Device address is 1
Addr-msb	Most significant byte of device address is 00 hex.
Addr-lsb	Least significant byte of device address is 01 hex.
Command	Command byte (see Table 1).
n d-bytes	Number of data bytes to follow (00 to 03 hex).
d-byte 1	1st data byte (the qualifier byte is considered a data byte).
…	…
d-byte n	nth data byte.
Checksum	Bitwise inversion of the 1 byte sum of bytes beginning with the most significant address byte and ending with the byte preceding the checksum. (To perform a bitwise inversion, "exclusive OR" the one byte sum with FF hex.)

The master requests information by sending one of the Read Functions as shown in Table 1. Since no data is sent to the chiller during a read request, the master uses 00 for the number of data bytes following the command byte.

The chiller will respond to a Read Function by echoing the lead character, address, and command byte, followed by the requested data and checksum. When the chiller sends data, a qualifier byte is sent first, followed by a two byte signed integer (16 bit, MSB sent first). The qualifier byte indicates the precision and units of measure for the requested data as detailed in Table 2.

As an example, the master requests to read internal temperature by sending:

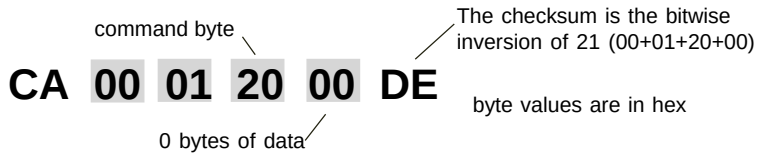

If the temperature is -10.5°C, the slave would reply:

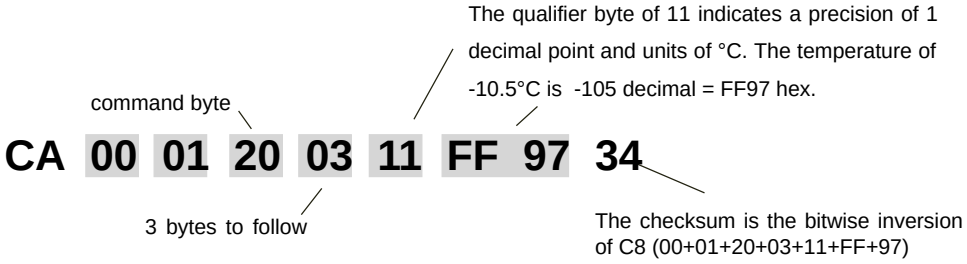

The master sets parameters in the chiller by sending one of the Set Functions as shown in Table 1. The master does not send a qualifier byte in the data field. The master should be preprogrammed to send the correct precision and units (it could also read the parameter of interest first to decode the correct precision and units needed).

For example, if the master wants to set the setpoint to 30°C, it would send :

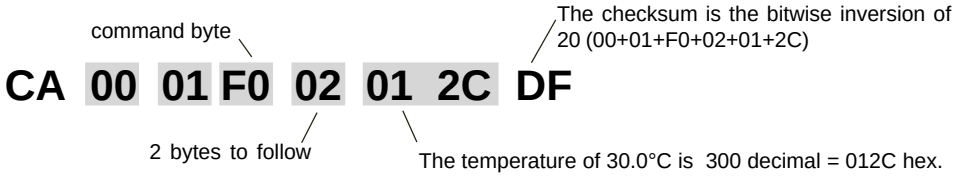

The slave responds:

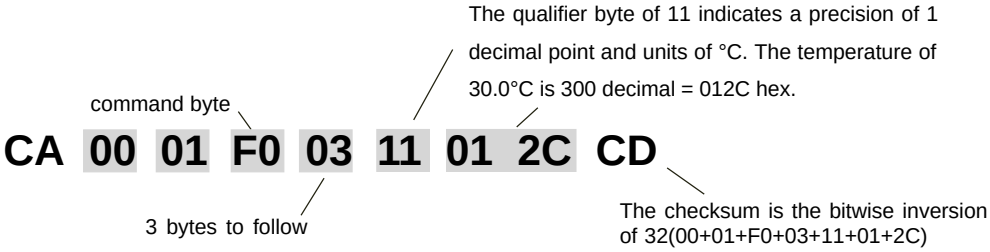

Table 1 Commands (All bytes are in hex)

FUNCTION	MASTER SENDS	UNIT RESPONDS
READ		
Read Internal Temperature	CA 00 01 **20** 00 DE	CA 00 01 **20** 03 qb d1 d2 cs
Read External Sensor	CA 00 01 **21** 00 DD	CA 00 01 **21** 03 qb d1 d2 cs
Read Setpoint (control point)	CA 00 01 **70** 00 8E	CA 00 01 **70** 03 qb d1 d2 cs
Read Low Temperature Limit	CA 00 01 **40** 00 BE	CA 00 01 **40** 03 qb d1 d2 cs
Read High Temperature Limit	CA 00 01 **60** 00 9E	CA 00 01 **60** 03 qb d1 d2 cs
Read Heat Proportional Band (P)	CA 00 01 **71** 00 8D	CA 00 01 **71** 03 qb d1 d2 cs
Read Heat Integral (I)	CA 00 01 **72** 00 8C	CA 00 01 **72** 03 qb d1 d2 cs
Read Heat Derivative (D)	CA 00 01 **73** 00 8B	CA 00 01 **73** 03 qb d1 d2 cs
Read Cool Proportional Band (P)	CA 00 01 **74** 00 8A	CA 00 01 **74** 03 qb d1 d2 cs
Read Cool Integral (I)	CA 00 01 **75** 00 89	CA 00 01 **75** 03 qb d1 d2 cs
Read Cool Derivative (D)	CA 00 01 **76** 00 88	CA 00 01 **76** 03 qb d1 d2 cs
Read Resistivity Value	CA 00 01 **2C** 00 D2	CA 00 01 **2C** 03 qb d1 d2 cs
Read Flow Value	CA 00 01 **10** 00 CE	CA 00 01 **10** 03 qb d1 d2 cs
Read Resistivity Setpoint	CA 00 01 **4C** 00 B8	CA 00 01 **4C** 03 qb d1 d2 cs
Read Low Flow Setpoint	CA 00 01 **30** 00 CE	CA 00 01 **30** 03 qb d1 d2 cs

command bytes shown in **bold**
qb = qualifier byte
d1,d2 = 16 bit signed integer of the value being sent or received
cs = the checksum of the string (see text)
ed = echo back of the command byte as received
v1,v2 = protocol version
* = limited to the range of the chiller
xx = no valid data, include in checksum

Continued on next page.

Table 1 Commands (All bytes are in hex)

FUNCTION	MASTER SENDS	UNIT RESPONDS
SET		
Set Setpoint (control point)*	CA 00 01 **F0** 02 d1 d2 cs	CA 00 01 **F0** 03 qb d1 d2 cs
Set Heat Low Temperature Limit*	CA 00 01 **C0** 02 d1 d2 cs	CA 00 01 **C0** 03 qb d1 d2 cs
Set Heat High Temperature Limit*	CA 00 01 **E0** 02 d1 d2 cs	CA 00 01 **E0** 03 qb d1 d2 cs
Set Low Flow Setpoint	CA 00 01 **B0** 02 d1 d2 cs	CA 00 01 **B0** 03 qb d1 d2 cs
Set Resistivity Setpoint	CA 00 01 **CC** 02 d1 d2 cs	CA 00 01 **CC** 03 qb d1 d2 cs
Set Heat Proportional Band (P=1-99.9)	CA 00 01 **F1** 02 d1 d2 cs	CA 00 01 **F1** 03 qb d1 d2 cs
Set Heat Integral (I = 0-9.99)	CA 00 01 **F2** 02 d1 d2 cs	CA 00 01 **F2** 03 qb d1 d2 cs
Set Heat Derivative (D= 0-5.0)	CA 00 01 **F3** 02 d1 d2 cs	CA 00 01 **F3** 03 qb d1 d2 cs
Set Cool Proportional Band (P=1-99.9)	CA 00 01 **F4** 02 d1 d2 cs	CA 00 01 **F4** 03 qb d1 d2 cs
Set Cool Integral (I = 0-9.99)	CA 00 01 **F5** 02 d1 d2 cs	CA 00 01 **F5** 03 qb d1 d2 cs
Set Cool Derivative (D= 0-5.0)	CA 00 01 **F6** 02 d1 d2 cs	CA 00 01 **F6** 03 qb d1 d2 cs
UNIT ERROR RESPONSES		
Bad Command	N/A	CA 00 01 **0F** 02 01 ed xx cs
Bad Checksum	N/A	CA 00 01 **0F** 02 03 ed xx cs
Bad Data	N/A	CA 00 01 **0F** 02 02 ed xx cs
MISCELLANEOUS		
Request Acknowledge	CA 00 01 **00** 00 FE	CA 00 01 **00** 02 v1 v2 cs

command bytes shown in **bold**
qb = qualifier byte
d1,d2 = 16 bit signed integer of the value being sent or received
cs = the checksum of the string (see text)
ed = echo back of the command byte as received
v1,v2 = protocol version
* = limited to the range of the chiller
xx = no valid data, include in checksum

Table 2
QUALIFIER BYTE

00 hex	0 precision, no units of measure
01 hex	0 precision, °C
02 hex	0 precision, °F
10 hex	0.1 precision, no units of measure
11 hex	0.1 precision, °C units
12 hex	0.1 precision, °F units
13 hex	0.1 precision, LPM
14 hex	0.1 precision, GPM
08 hex	0 precision, MOhm-cm
18 hex	0.1 precision, MOhm-cm
20 hex	0.01 precision, no units of measure

Example: The temperature of 45.6°C would be represented by the qualifier 11 hex, followed by the 2 bytes 01 C8 hex (456 decimal).

Appendix D Programming Software

The Thermo NESLAB Communications Software is a user friendly software that allows you to automate your temperature control process. The software includes a 3½" disk, comprehensive operator's manual and a toll-free number to a trained technical staff.

NEScom Software allows you to write custom temperature programs for our Digital or Microprocessor based temperature control apparatus. Choose upper or lower temperature limits and monitor system status with an alarm. NEScom can also record your results on a user selectable graph. NEScom must be used with an IBM or 100% compatible computer.

Select from easy to use product icons.

Create graphs and charts.

Easily configure ramping functions which set the setpoint over time.

View pop-up alarm windows which display if an alarm condition occurred.

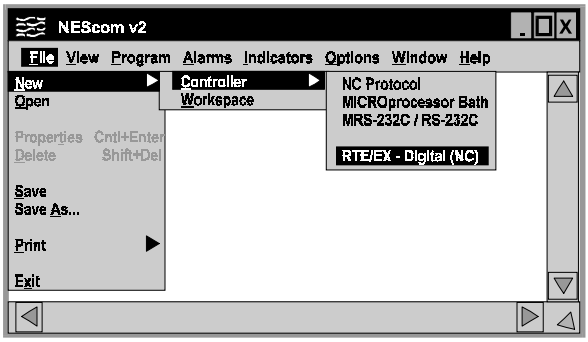

Select software functions from the easy to use pulldown menus.

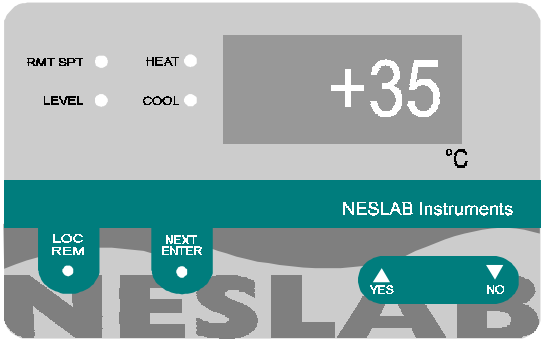

View a virtual controller screen which allows remote monitoring and operation of product control panel.

WARRANTY

Thermo NESLAB Instruments, Inc. warrants for 12 months from date of shipment any Thermo NESLAB unit according to the following terms.

Any part of the unit manufactured or supplied by Thermo NESLAB and found in the reasonable judgment of Thermo NESLAB to be defective in material or workmanship will be repaired at an authorized Thermo NESLAB Repair Depot without charge for parts or labor. The unit, including any defective part must be returned to an authorized Thermo NESLAB Repair Depot within the warranty period. The expense of returning the unit to the authorized Thermo NESLAB Repair Depot for warranty service will be paid for by the buyer. Thermo NESLAB's responsibility in respect to warranty claims is limited to performing the required repairs or replacements, and no claim of breach of warranty shall be cause for cancellation or recision of the contract of sales of any unit.With respect to units that qualify for field service repairs, Thermo NESLAB's responsibility is limited to the component parts necessary for the repair and the labor that is required on site to perform the repair. Any travel labor or mileage charges are the financial responsibility of the buyer.

The buyer shall be responsible for any evaluation or warranty service call (including labor charges) if no defects are found with the Thermo NESLAB product.

This warranty does not cover any unit that has been subject to misuse, neglect, or accident. This warranty does not apply to any damage to the unit that is the result of improper installation or maintenance, or to any unit that has been operated or maintained in any way contrary to the operating or maintenance instructions specified in Thermo NESLAB's Instruction and Operation Manual. This warranty does not cover any unit that has been altered or modified so as to change its intended use.

In addition, this warranty does not extend to repairs made by the use of parts, accessories, or fluids which are either incompatible with the unit or adversely affect its operation, performance, or durability.

Thermo NESLAB reserves the right to change or improve the design of any unit without assuming any obligation to modify any unit previously manufactured.

THE FOREGOING EXPRESS WARRANTY IS IN LIEU OF ALL OTHER WARRANTIES, EXPRESSED OR IMPLIED, INCLUDING BUT NOT LIMITED TO WARRANTIES OR MERCHANTABILITY AND FITNESS FOR A PARTICULAR PURPOSE.

Thermo NESLAB'S OBLIGATION UNDER THIS WARRANTY IS STRICTLY AND EXCLUSIVELY LIMITED TO THE REPAIR OR REPLACEMENT OF DEFECTIVE COMPONENT PARTS AND Thermo NESLAB DOES NOT ASSUME OR AUTHORIZE ANYONE TO ASSUME FOR IT ANY OTHER OBLIGATION.

Thermo NESLAB ASSUMES NO RESPONSIBILITY FOR INCIDENTAL, CONSEQUENTIAL, OR OTHER DAMAGES INCLUDING, BUT NOT LIMITED TO LOSS OR DAMAGE TO PROPERTY, LOSS OF PROFITS OR REVENUE, LOSS OF THE UNIT, LOSS OF TIME, OR INCONVENIENCE.

This warranty applies to units sold in the United States. Any units sold elsewhere are warranted by the affiliated marketing company of Thermo NESLAB Instruments, Inc. This warranty and all matters arising pursuant to it shall be governed by the law of the State of New Hampshire, United States. All legal actions brought in relation hereto shall be filed in the appropriate state or federal courts in New Hampshire, unless waived by Thermo NESLAB.

HX-540
Recirculating Chiller

NESLAB P/N 013499
Rev. 06/11/97

Instruction and Operation Manual



HX-540 Recirculating Chiller

Instruction and Operation Manual

Table of Contents

PREFACE

Compliance 4
Unpacking 4
Warranty 4
After-sale Support 4

SECTION I
Safety

Warnings 5

SECTION II
General Information

Description 6
Specifications 6

SECTION III
Installation

Site 8
Facility Water Requirements 8
Electrical Requirements 9
Plumbing Requirements 10
Fluids 11
Filling Requirements 11

SECTION IV
Operation

Pre-Start Up 12
Pump Down Cycle 12
Electrical Enclosure (Optional) 13
Panel Mounted Digital Temperature Controller 14
Series II Controller (Optional) 16
Digital with InterlockTemperature Controller 27
Remote Digital Temperature Controller 30
Flow Control 32
High and Low Pressure Cutout 32
Pressure Switch 32
Pump Motor Overload Protector 32
External Pressure Rgulator (Optional) 33

SECTION V
Maintenance

Service Contracts 34
Cleaning 34
Pump Strainer 34

SECTION VI
Troubleshooting

Checklist 35
Service Assistance 35
Parts List 35

SECTION VII
Diagrams

Front View 36
Rear View 36
Flow Diagram 37

APPENDIX A

DeltaTemp Programming Software

APPENDIX B

International Quick Reference Guides

WARRANTY

HX-540 Quick Reference Operating Procedures

Installation
Position the unit in a clean environment with easy access to facility cooling water and a drain. The facility water requirements must meet those specified in the instruction manual or unit performance will be derated. Inadequate water supply could cause the compressor to overheat and turn the unit off.

Ensure the voltage of the power source meets the specified voltage, ±10%.

The plumbing connections are located on the rear of the unit and are labelled FACILITY WATER INLET and OUTLET, and RECIRCULATING FLUID INLET and OUTLET. Remove the plastic protective plugs from all the plumbing connections. Connect the FACILITY WATER INLET fitting to the facility cooling water and the FACILITY WATER OUTLET fitting to a drain. Connect the RECIRCULATING FLUID INLET fitting to the outlet of your application and the RECIRCULATING FLUID OUTLET fitting to the inlet of your application.

A non-freezing fluid is required for operation at any recirculating or ambient temperatures. The selected fluid must have a viscosity of 50 centistokes or less at the lowest operating temperature.

To fill the reservoir open the access panel on the left rear corner of the case top and remove the reservoir cover by unscrewing the thumbscrews. Fill the reservoir to within two inches of the top when the unit is at the desired operating temperature. If the fluid capacity of your application and recirculation lines are significant, have extra fluid on hand.

Operation
Before starting the unit, ensure the compressor mounting nuts have been loosened and that the facility water is on. Double check all electrical and plumbing connections. Make sure the circulating system has been filled with cooling fluid.

The unit must be connected to the power source for at least 12 hours to allow the oil to be heated and separated from the refrigerant

To start the unit, place the Power Switch to the On position. The Cool and Idle LEDs on the front panel indicate the status of the refrigeration system. Cool is on when the unit is removing heat from the cooling fluid, Heat is on when the unit is in the hot gas by-pass mode. As the operating temperature approaches the setpoint, the LEDs cycle.

When the unit is shut off, wait five minutes before restarting to allow time for the refrigeration pressures to equalize. If the pressures are not allowed to equalize, the compressor will short-cycle and no cooling will occur.

To display the temperature setpoint, press and hold the Setpoint/Actual Temp switch. To adjust the temperature setpoint, press and hold the Setpoint/Actual switch and turn the Adjust knob until the desired temperature setpoint is indicated on the digital display. Once the setpoint is adjusted, release the Setpoint/Actual switch. The display will now indicate the temperature of the fluid in the reservoir.

The unit may be equipped with one of several optional controllers. In this case please refer to the instruction manual for details on their operation.

Flow Control
The RECIRCULATING FLOW CONTROL handle controls the flow rate to your application. In the "+" position you receive full flow, the "-" position is no flow.

Periodic Maintenance
Periodically inspect the reservoir fluid. If cleaning is necessary, flush the reservoir with a cleaning fluid compatible with the circulating system and the cooling fluid.

The cooling fluid should be replaced periodically. When operating at low temperatures, the concentration of water in the cooling fluid will increase over time, leading to a loss of cooling capacity.

Periodic vacuuming of the condenser fins is necessary. The frequency of cleaning depends on the operating environment. We recommend a visual inspection of the condenser be made monthly after initial installation. After several months, the cleaning frequency will be established.

The unit has a pump strainer. If debris is in the system, the strainer will prevent the material from being drawn into the pump and damaging the pump vanes.

After initial installation, the strainer may become clogged. The strainer must be cleaned after the first week of installation. After this first cleaning, a monthly visual inspection is recommended. After several months, the frequency of cleaning will be established.

Before cleaning the strainer, disconnect the power cord from the power source and drain the reservoir.

Preface

Compliance

Products tested and found to be in compliance with the requirements defined in the EMC standards defined by 89/336/EEC as well as Low Voltage Directive (LVD) 73/23/EEC can be identified by the CE label on the rear of the unit. The testing has demonstrated compliance with the following directives:

LVD, 73/23/EEC	Complies with UL 3101-1:93
EMC, 89/336/EEC	EN 55011, Class A Verification EN 50082-1:1992 IEC 1000-4-2:1995 IEC 1000-4-3:1994 IEC 1000-4-4:1995

For any additional information refer to the Letter of Compliance that shipped with the unit (Declaration of Conformity).

Unpacking

Retain all cartons and packing material until the unit is operated and found to be in good condition. If the unit shows external or internal damage, or does not operate properly, contact the transportation company and file a damage claim. Under ICC regulations, this is your responsibility.

Warranty

Units have a warranty against parts and workmanship for one full year from date of shipment. See back page for more details.

After-sale Support

NESLAB is committed to customer service both during and after the sale. If you have questions concerning the operation of your unit, contact our Sales Department. If your unit fails to operate properly, or if you have questions concerning spare parts or Service Contracts, contact our Service

Department. Before calling, please obtain the following information from the unit's serial number label:

- *BOM number* _____
- *Serial number* _____

Section I Safety

Warnings

Make sure you read and understand all the instructions and safety precautions listed in this manual before installing or operating your unit. If you have any questions concerning the operation of your unit or the information in this manual, contact our Sales Department (see Preface, After-sale Support).

Performance of installation, operation, or maintenance procedures other than those described in this manual may result in a hazardous situation and may void the manufacturer's warranty.

Transport the unit with care. Sudden jolts or drops can damage the refrigeration lines.

Observe all warning labels.

Never remove warning labels.

Never operate damaged or leaking equipment.

Always disconnect the line cord from the power source before performing any maintenance procedures, or before moving the unit.

Never operate equipment with damaged line cords.

Refer service and repairs to a qualified NESLAB technician.

In addition to the safety warnings listed above, warnings are posted throughout the manual. These warnings are designated by an exclamation mark inside an equilateral triangle with text highlighted in bold print. Read and follow these important instruction. Failure to observe these instruction can result in permanent damage to the unit, significant property damage, or personal injury or death.

Section II General Information

Description

The HX-540 Recirculating Chiller is designed to provide a continuous flow of cooling fluid at a constant temperature and pressure.

The unit consists of a water-cooled refrigeration system, stainless steel reservoir, recirculating pump, and a digital controller.

An important characteristic of the unit is its ability to track a set temperature virtually independent of changing heat loads. Once the desired operating temperature is set, the operating temperature will not shift more than a few tenths of a degree.

Specifications

Cooling Capacity[1]

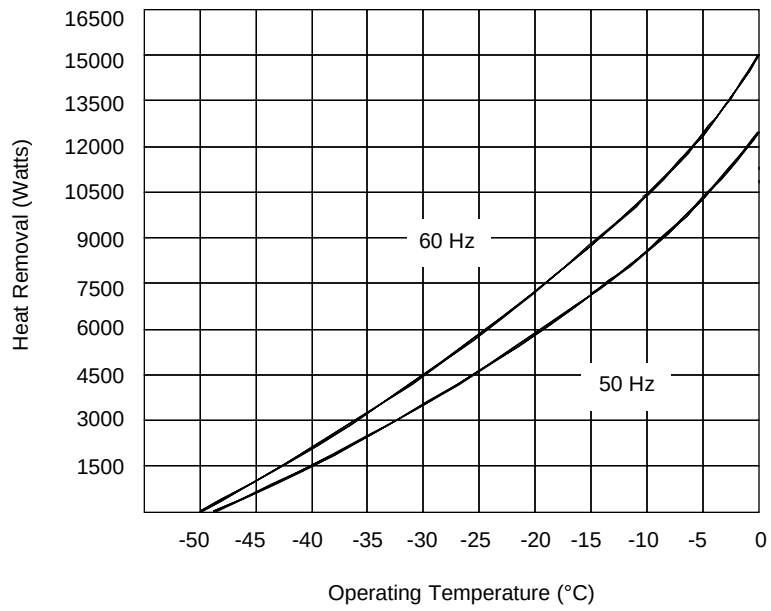

Temperature Range	-40°C to 0°C
Temperature Stability	± 0.5°C
Fluid Capacity[2] *Gallons* *Liters*	 5 19

1. Specific heat of cooling fluid is 0.6 BTU/lb°F.
2. Total fluid volume of the reservoir, exchanger, and all internal plumbing lines.

Pump Capacity[3]	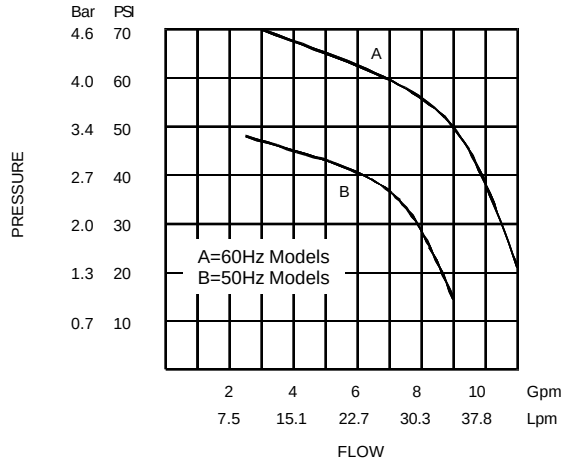
Dimension[4] *(H x W X D)* *Inches* *Centimeters*	 44 x 34 x 25.5 111.8 x 86.3 x 64.7
Weight *Pounds* *Kilograms*	 915 415

3. Specific gravity is 0.5.
4. Add 9 inches (22.9 cm) to depth for electrical enclosure.

Section III Installation

Site

he unit is designed for indoor operation in a laboratory or clean industrial environment. Ambient temperatures should be in the range of +50°F to +100°F (+10 to +38°C). **Never install the unit in a location where excessive heat, moisture, or corrosive materials are present.**

The unit has a water-cooled refrigeration system. It should be placed in a location with easy access to a facility water source and a drain.

The unit will retain its full rated capacity with facility water temperatures to approximately +85°F (+30°C). Above 85°F, derate the cooling capacity 1% for every 1°F above +85°F, to a maximum facility water temperature of +95°F. In degrees Celsius, derate the cooling capacity 1% for every 0.5°C above +30°C, to a maximum facility water temperature of +35°C.

Facility Water Requirements

The facility water must meet or exceed the following requirements for the unit to retain its full rated capacity. If the facility water does not meet these standards, the cooling capacity will be derated.

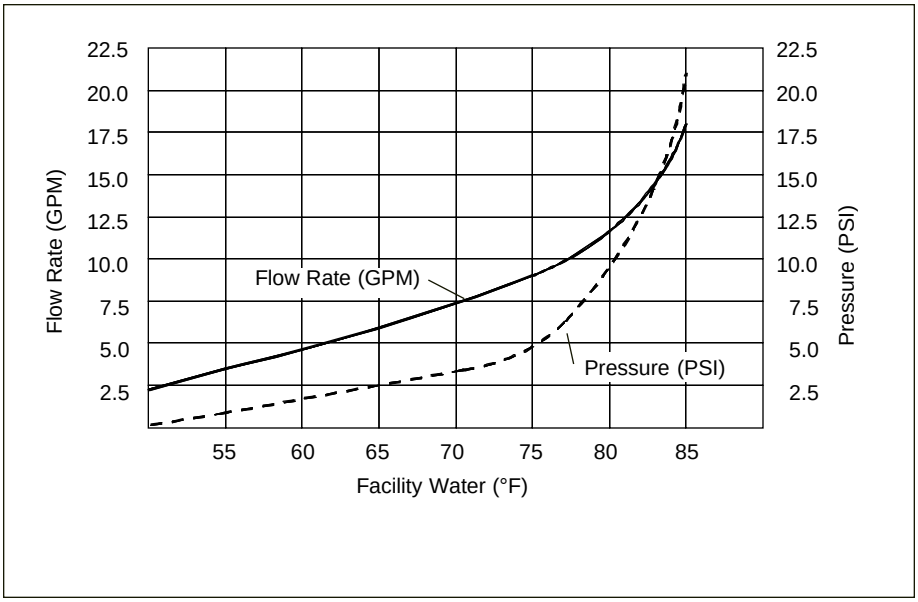

The unit has a water regulating valve located in the FACILITY WATER INLET line. The valve regulates the flow rate of the facility water that passes through the heat exchanger based on the heat load. Flow through the heat exchanger is stopped when the unit turned off. If the facility water temperature or pressure do not meet the specified requirements, contact our Service Department for assistance.

Electrical Requirements

Refer to the serial number label on the rear of the unit to identify the specific electrical requirements of your unit.

Ensure the voltage of the power source meets the specified voltage, ±10%.

All power connections should be made by a qualified electrician. The power connection is three wire terminal block plus a ground connection and will operate on a delta or wye system. Make sure an adequate ground connection is provided.

The unit has an automatic compressor crankcase heater. The crankcase heater warms the oil in the compressor and prevents refrigerant and oil from mixing. Before initial start up, or after storage, the unit should be connected to the power source for at least 12 hours before turning the unit on. This will allow time for the crankcase oil to be heated and the refrigerant to separate from the oil.

The HX-540 Recirculating Chiller is a three phase unit. The unit is equipped with a phase rotation interlock. This interlock prevents the unit from starting if the phase rotation is wrong. If the unit will not start, see Section VI, Trouble-shooting. If the options in the checklist are not applicable, the problem may be phase rotation.



For personal safety and equipment reliability, the following procedure should only be performed by a qualified technician.

Disconnect the power source from the power source. Remove the rear panel and the junction box cover. Reverse any two line cord leads on the line cord side of the relay.



Never remove the green ground wire.

Replace the rear panel and connect the power source. If the unit will not start, contact our Customer Service Department for assistance.

Plumbing Requirements

The plumbing connections are located at the rear of the unit.

The facility water connections are labelled FACILITY WATER INLET and OUTLET. These connections are 1 inch FPT.

The cooling fluid connections are labelled RECIRCULATING FLUID INLET and OUTLET. These connections are ¾ inch FPT.

Connect the FACILITY WATER INLET to the facility water source.

Connect the FACILITY WATER OUTLET to the drain.

Connect the RECIRCULATING FLUID INLET to the outlet of the instrument being cooled.

Connect the RECIRCULATING FLUID OUTLET to the inlet of the instrument being cooled.

All tubing should be rated to withstand 100 psi. Make sure all tubing connections are securely clamped. Avoid running lines near radiators, hot water pipes, etc. If substantial lengths of tubing are necessary, insulation may be required to prevent loss of cooling capacity. Tubing and insulation are available from NESLAB. Contact our Sales Department for information.

Before installing the unit to a instrument that previously used tap water as a cooling fluid, flush the instrument several times to remove any rust or scale that has built up. The manufacturer of the instrument should be able to recommend a cleaning fluid to clean their equipment.

It is important to keep the distance between the unit and the instrument being cooled as short as possible, and to use the largest diameter tubing practical. Tubing should be straight, without bends or kinks. If reductions must be made, they should be made at the inlet and outlet of the instrument being cooled, not at the HX.

An externally mounted flow meter and temperature readout are required with this unit. These monitors will indicate whether the facility water requirements are being met (see Section III, Facility Water Requirements). It is the users responsibility to provide adequate facility water to the unit.

Both devices should be installed in the FACILITY WATER INLET line.

Fluids

A non-freezing fluid is required for operation at any recirculating or ambient temperature. Use a fluid capable of operating at -60°C without freezing.



Due to the physical nature of a plate heat exchanger, and its response to temperature changes, 100% water must not be used as a circulating fluid. Using 100% water may cause the plate heat exchanger to rupture.

Do not use automobile anti-freeze. Commercial anti-freeze contains silicates that can damage pump seals.

Never use flammable or corrosive fluids with this unit.

Distilled and deionized water may be aggressive and cause material corrosion. Please contact NESLAB before subjecting this unit to prolonged exposure to distilled or deionized water.

The selected fluid must have a viscosity of 50 centistokes or less at the lowest operating temperature.

Filling Requirements

The fluid capacity of the connecting tubes and the instrument being cooled may be appreciable. Have extra cooling fluid on hand until the entire system is filled.

Thermal expansion and contraction of the cooling fluid must be taken into account when filling the unit.

Lift the hinged access panel on the unit's cover. Loosen the two thumb-screws and remove the reservoir cover.

Fill the reservoir with cooling fluid so that the fluid level will be within 2 inches of the top when the unit is at the desired operating temperature.

Replace the reservoir cover. Tighten the thumbscrews. Close the panel.

Section IV Operation

Pre-Start Up

Remove the two side access panels and the rear access panel (opposite end from the electrical enclosure) to access the compressor area.

Loosen the four compressor mounting nuts. There should be approximately 1/8" clearance between each compression mounting foot and shipping bracket to allow the compressor to "float" on the mounting springs.

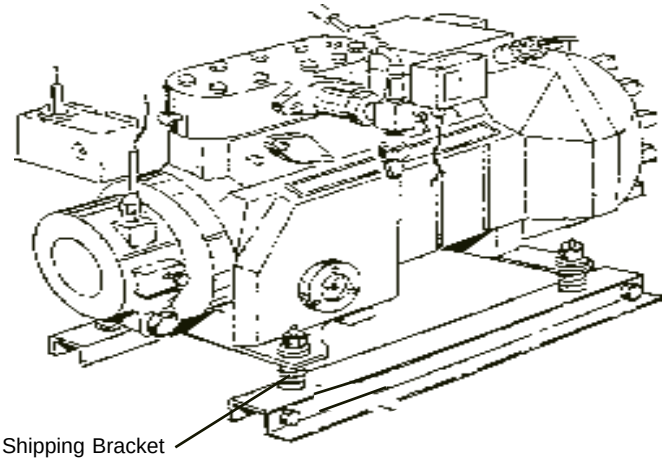

Pump Down Cycle

The pump down cycle is designed to extend the life of the compressor in the refrigeration system. After the unit has been manually shut down, the refrigeration system will continue to run for about 30 seconds and will shut down when a low pressure fault occurs (see High and Low Pressure Cutout). This additional running time allows the refrigerant in the compressor to be removed and stored in the receiver.

In the event that a fault occurs, the unit will not start the pump down cycle, but will shut down immediately.

Shutting the unit off using a circuit breaker or other device on the line side of the relay defeats the purpose of the pump down cycle and is not recommended. If remote operation is desired, contact our Sales Department.

Electrical Enclosure (Optional)

Panel Controls

MAIN POWER
Indicates power is supplied to the unit.

SYSTEM ON
Indicates main contactor is closed. The contactor must be closed for the unit to start.

MACHINE ON
Indicates machine is running.

PUMP FAULT
Indicates a pump overload fault has occurred.

COMPRESSOR FAULT
Indicates a high or low refrigeration pressure fault has occurred.

PUSH/SYSTEM ON Button (Unlabelled)
Closes main contactor. Main contactor must be closed for the unit to start.

STOP/RUN/START Switch
To start the unit locally, turn the switch to the momentary START position. The RUN position is the normal operating position for the switch. To shut the unit off locally, turn the switch to the STOP position. The unit will start the pump down cycle.

EMERGENCY OFF Button (Optional)
When pressed, the unit will shut off immediately, bypassing the unit's pump down cycle. This button is intended for emergencies only. Do not use it as a normal shut down procedure. The button must be pulled out following an emergency shut down in order to perform the normal start up procedure.

AUTO RESTART Switch
The AUTO RESTART switch is located inside the electrical enclosure. If the switch is in the ON position, the unit will automatically restart when power is restored following an outage (see Interface Access. panel).

Interface Receptacles
The REMOTE and ACCESSORY receptacles and the ENABLE/DISABLE switch are located on a panel on the right side of the electrical enclosure (facing the enclosure). Both receptacles and the switch are connected to the Interface Access. Panel located inside the electrical enclosure. Refer to the Interface Access. Panel description for more details, and to the Digital Temperature Controller (Remote) for installation instructions.

Panel Mounted Digital Temperature Controller

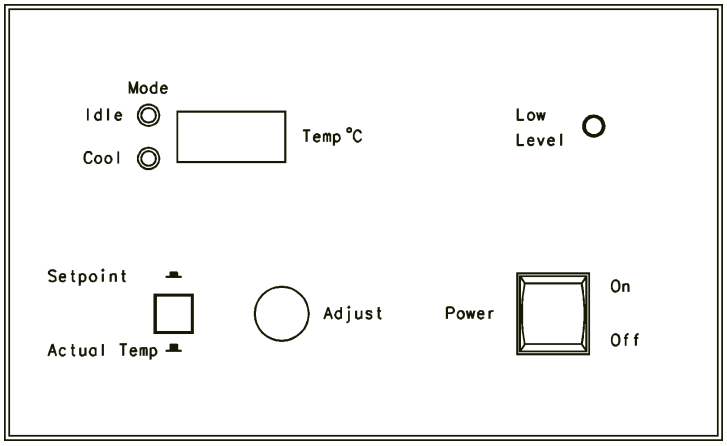

Digital Temperature Controller

Temperature Control

The Cool and Idle LEDs indicate the status of the refrigeration system. The Idle indicator is lit when the unit is in the hot gas by-pass mode. The Cool indicator is lit when the refrigeration system is removing heat from the cooling fluid. As the fluid temperature approaches the temperature setpoint, the LEDs cycle on and off to indicate the duty cycle of the system. The unit can be in the Cool or the Idle mode, but never both at the same time. A balance between Cool and Idle controls the temperature.

Start Up

Before starting the unit, check all electrical and plumbing connections and make sure the recirculating system (the HX, the instrument being cooled, and the recirculation lines) has been properly filled with cooling fluid. Also make sure the facility water is turned on and the flow control valve is fully closed (see Section V, Flow Control).

To start the unit, place the Power On/Off switch in the On position. The pump and refrigeration system will start. The Temp°C display will indicate the temperature of the fluid in the reservoir. After starting recheck the fluid level, a “top off” may be needed. To shut the unit off, place the Power On/Off switch in the Off position.

When the unit is shut off, wait approximately 5 minutes before restarting. This allows time for the refrigeration pressures to equalize. If the pressures are not allowed to equalize, the compressor will short-cycle (clicking sound) and no cooling will occur.

Temperature Adjustment

To display the temperature setpoint, press and hold the Setpoint/Actual Temp button. To adjust the setpoint, press and hold the Setpoint/Actual Temp button and turn the Adjust dial until the desired temperature setpoint is indicated on the Temp°C LED display. Once the setpoint is adjusted, release the Setpoint/Actual Temp button. The Temp°C LED display will indicate the temperature of the fluid in the reservoir.

Inadvertent movement of the Adjust dial will result in a change in the setpoint. The change will not be immediately reflected on the Temp°C display unless the Setpoint/Actual Temp button is pressed. The display will eventually change as the unit responds to the new setpoint

Low Level Warning

The Low Level indicator is connected to a float switch in the reservoir. The indicator warns the user of a low cooling fluid level in the reservoir. A low fluid level condition occurs when the cooling fluid in the reservoir drops below the operating level. The indicator serves only as a warning. The unit will not shut down as a result of a low fluid level condition.

Series II Controller (Optional)

Description

The Series II temperature controller features are divided into four sections. Three are mounted on the controller front panel: Temperature Control, . Alarm Control, and Alarm Status. The fourth section, the Interface Access. panel is located inside the electrical enclosure.

The four controller sections all work together, but for ease of explanation, are described separately.

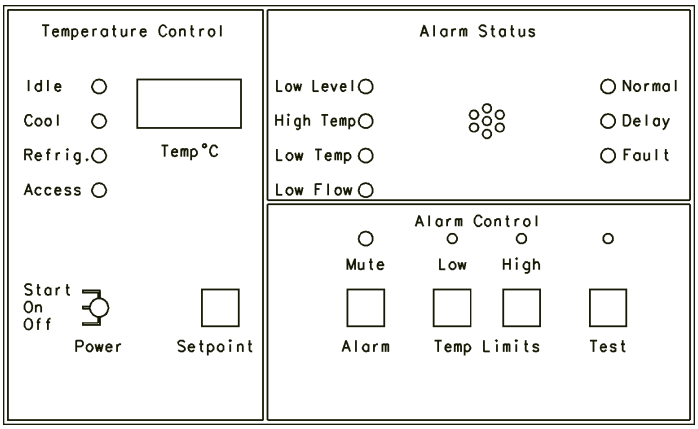

Series II Temperature Controller

Temperature Control

This section of the temperature controller turns the unit on and off, adjusts and displays the fluid and setpoint temperatures, and indicates general refrigeration status.

Before starting the unit, double check all electrical and plumbing connections and make sure the circulating system (the HX, the instrument being cooled, and the tubing that connects them) has been properly filled with cooling fluid. Ensure the facility water is turned on.

To display the temperature setpoint, press and hold the Setpoint button. To adjust the setpoint, press and hold the Setpoint button and turn the dial above the Setpoint button until the desired temperature setpoint is indicated on the Temp°C LED display. Once the setpoint is adjusted, release the Setpoint button. The Temp°C LED display will indicate the fluid temperature.

Inadvertent movement of the Setpoint dial will result in a change in the setpoint. The change will not be immediately reflected on the Temp°C LED display unless the Setpoint button is pressed. The temperature will eventually change as the unit responds to the new setpoint

The Temperature Control section is equipped with four indicators: Idle, Cool, Refrig. (refrigeration), and Access (accessory).

The Cool and Idle indicators indicate the status of the refrigeration system. The Idle indicator is lit when the unit is in the hot gas by-pass mode. The Cool indicator is lit when the refrigeration system is removing heat from the cooling fluid. As the fluid temperature approaches the temperature setpoint, the indicators cycle on and off to indicate the duty cycle of the system. The unit can be in the Cool or the Idle mode, but never both at the same time. A balance between Cool and Idle is needed to control temperature.

The Refrig. indicator displays the status of the refrigeration compressor. The indicator is lit when the compressor is running.

The Access indicator displays the status of the ACCESS. ENABLE/DISABLE switch on the Interface Access. panel. The indicator is lit when the switch is in the ENABLE position. See Interface Access. panel for more information.

Alarm Control

The Alarm Control section adjusts the high and low temperature limits of the alarm, tests the alarm, and activates/de-activates the audible alarm.

To display the high or low temperature limit, press the corresponding button. When the button is pressed, the limit is indicated on the Temp°C display.

To adjust either temperature limit, press the corresponding button and turn the slotted potentiometer located directly above the button (a small screw-driver is required). The high and low values must be at least 4°C apart for the unit to operate.

The Test button simulates high and low temperature conditions to test the temperature limits.

To test the temperature limits, press the Test button and turn the dial located directly above the button. The simulated temperature will appear on the Temp°C display. When the temperature limits are exceeded on the display, the alarm will sound, and the corresponding indicator in the Alarm Status section will light indicating which limit has been exceeded.

The alarm will only sound when a fault occurs. The Alarm button alternately activates and mutes the audible alarm as indicated by the Mute indicator. When the alarm is muted, it will remain muted until the Alarm button is . pressed; the alarm does not reset after a fault condition has been corrected.

Alarm Status

The Alarm Status section indicates the status of the fault monitors. Four amber indicators display the status of the Low Level, High Temp, Low Temp, and Low Flow fault monitors. In the event of a fault, the cause of the fault must be identified and corrected before the unit can be restarted.

The Low Level indicator is connected to a float switch in the reservoir. If a low cooling fluid level condition is detected, the Low Level indicator will light and the Delay indicator will flash. If the condition is not corrected within 30 seconds, the Delay and Normal indicators turn off, the Fault indicator turns on, and the audible alarm will sound. After 50 seconds (total elapsed time), the unit will shut down and a set of relay contacts will open (the status of the relay contacts can be monitored using pins 14 and 15 of the REMOTE . CONT. receptacle on the Interface Access. panel).

The Low Flow indicator is connected to a flow switch in the RETURN line. A low flow fault occurs when the flow rate of the returning cooling fluid drops below 0.5 gallons per minute (1.8 liters per minute). If a low flow condition is detected, the Low Flow indicator will light and the Delay indicator will flash. If the condition is not corrected within 5 seconds, the Delay and Normal .. indicators turn off, the Fault indicator turns on, and the audible alarm will sound. After 30 seconds (total elapsed time), the unit will shut down and the relay contacts will open.

The High/Low Temp indicators are connected to sensors that monitor the temperature of the cooling fluid as it exits the reservoir. The monitors protect the system from exposure to excessively hot or cold cooling fluid. A temperature fault occurs when the cooling fluid temperature exceeds the set temperature limit. In the event of a high or low temperature fault, the unit will shut down, the corresponding indicator will light, the audible alarm will sound, and the set of relay contacts will open.

The Normal indicator (green) indicates no fault is present and the unit is operating normally.

The Delay indicator (amber) indicates an initial condition is out of desired range.

The Delay indicator will flash:

- during the 30 second low fluid level condition delay period.
- during the 5 second low flow condition delay period.
- while the fluid temperature is reaching the high and low temperature conditions following a power up. Once the fluid temperature satisfies the and low limit conditions, the temperature alarm is armed and a fault . will occur if the temperature goes outside of the limits.

The Delay indicator turns off after these conditions are met.

The Fault indicator (red) indicates a fault has occurred. During a fault, the audible alarm will sound (unless muted), and the status indicator will display the condition(s) causing the fault.

Interface Access. Panel

The Interface Access. panel, located inside the electrical enclosure, allows the Series II temperature controller to be controlled and monitored with various electronic accessories.

The ACCESS. ENABLE/DISABLE switch allows the user to select the source of temperature setpoint adjustment. When the switch is in the ENABLE position, the setpoint is derived from the ACCESS receptacle (pins 6 and 15, 10mV/°C). When the switch is in the Disable position, the setpoint is derived from the Setpoint dial in the Temperature Control section on the front panel.

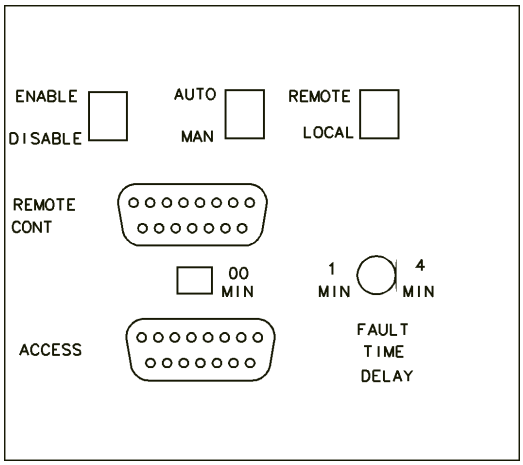

Interface Access Panel

The RESTART AUTO/MAN switch controls the operation of the controller's START switch. If the switch is in the MAN position, the START switch is "open" and the unit must be manually restarted when power is restored following an outage. In the AUTO position, the START switch is "closed" and the unit will automatically restart when power is restored. See ON/OFF/ START Logic and AUTO RESTART Switch for more information.

The START/STOP REMOTE/LOCAL switch selects the location where the unit is turned on: from the front panel ON/OFF/START switch or from an external switch. See ON/OFF/START Logic for more information.

The FAULT TIME DELAY potentiometer allows adjustment of the delay period following an initial “out of limits” condition. The time adjustment is in addition to the delays described in the Alarm Status section. For example, if the cooling fluid in the reservoir drops below the operating level, there is a 30 second delay period before a fault occurs. If the FAULT TIME DELAY is adjusted to 1 minute, the delay period for a low level condition would be 1 minute, 30 seconds. See the Alarm Status section for more information.

The D MIN receptacle allows the controller to be configured so the unit will continue to run if a fault occurs. This option is available for customers who are willing to accept the risk of damage to the unit in order to continue to provide all available cooling fluid to the instrument being cooled. Contact our Service Department for more information.

REMOTE CONT. Receptacle

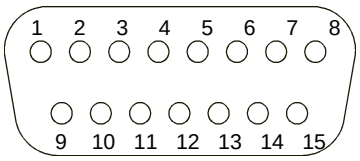

15 pin D-subminiature male

Pin #	Alarm circuitry	Control circuitry
1		Chassis ground.
2		ON/OFF control circuit power (+12VDC, unregulated). See ON/OFF/START Logic.
3	DC for LEDs (+5VDC, current limited through 47 Ω resistor).	
4	Low level switch (+5VDC, current limited through 680 Ω resistor).	
5		START button connection. See ON/OFF/START Logic.
6		Heater ON command, solid state relay drive (+8 to +13 VDC, current limited through 390 Ω resistor). Contact our Sales Department for more information.
7	Reserved.	
8	AT TEMPERATURE contact (24V, 1A maximum. AC and DC). When the fluid temperature is between the high and low temperature limits, this pin is connected to pin 15. See Relay Contact Logic.	
9	Common for DC power supplies, grounded.	

Pin #	Alarm circuitry	Control circuitry
10	FAULT indicator drive (-). Connect LED cathode here, anode to pin 3, for display of FAULT status. See External Status Indicator Logic.	
11	NOT AT TEMPERATURE indicator drive (-). Connect LED cathode here, anode to pin 3, for display indicating when the fluid temperature is not between the high and low temperature limits. See External Status Indicator Logic.	
12	NORMAL indicator drive (-). Connect LED cathode here, anode to pin 3, for display indicating when all status monitors (High Temperature, Low Temperature, Low Level, Low Flow) are normal. See External Status Indicator Logic.	
13		RUN switch connection. See ON/OFF/START Logic.
14	NORMAL contact (+24V, 1A maximum. AC and DC). When all status monitors are normal (see pin 12) this pin is connected to pin 15. See Relay Contact Logic.	
15	Relay contact common connection.	

The exclusion of alarm circuitry is an available option for Series II temperature controllers. The alarm circuitry pin connections are not used on these controllers.

Remote Connector Circuitry Details

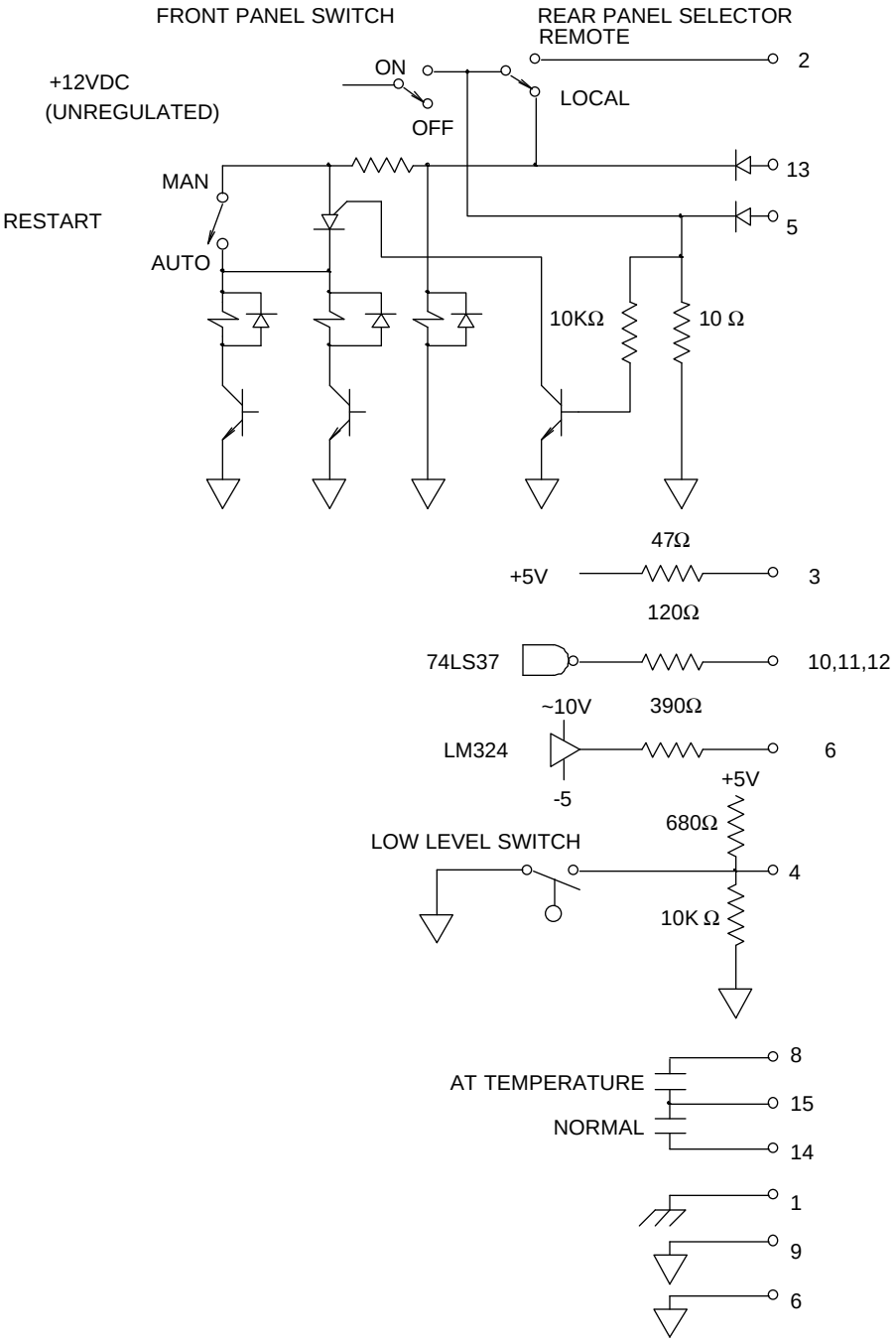

ON/OFF/START Logic

When the START/STOP LOCAL/REMOTE switch is set to LOCAL, the front panel ON/OFF/START switch controls the unit.

When the LOCAL/REMOTE switch is set to REMOTE, the front panel ON/OFF/START must be in the ON position for the unit to operate. An external switch is necessary to complete the circuit and start the unit.

If the front panel ON/OFF/START switch is OFF, then external switches cannot start the unit. This allows an operator or service person at the unit to override the external controls and shut down the unit.

If the front panel ON/OFF/START switch is ON, the external ON/OFF and START switches function just like the front panel switch.

If the rear panel RESTART AUTO/MAN switch is set to AUTO, the START switch is not needed to start the unit. It will start when the external ON/OFF switch is switched to ON or when power is restored after an outage.

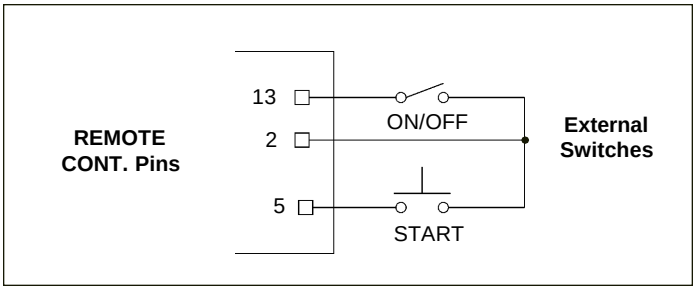

External Status Indicator Logic

The FAULT indicators light if one of the four fault conditions monitored by the alarm circuit (High and Low Temp, Low Level, and Low Flow) has occurred.

To prevent nuisance alarms, this signal does not indicate a FAULT condition when the unit is first turned on and the fluid temperature is outside the alarm limits. This situation will typically occur when the high temperature limit is set to a temperature below ambient. Once the fluid temperature is within the high and low temperature limits, subsequent excursions beyond those limits will produce a FAULT indication.

The NORMAL indicator lights when all four status monitors are normal (no faults). The NORMAL indicator logic is similar to the FAULT indictor logic; a temperature out of limits when the HX is first turned on is considered normal (not a fault).

Relay Contact Logic

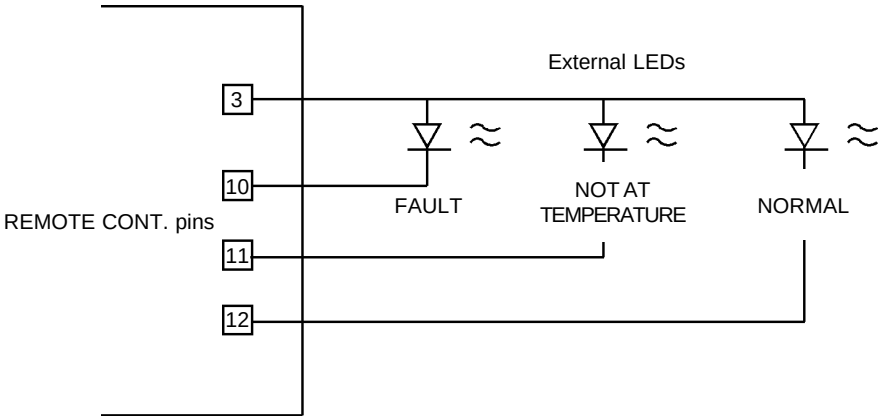

The NORMAL relay contacts are closed if all four status monitors are normal (no faults).

To prevent nuisance alarms, the contacts are closed when the unit is first turned on and the fluid temperature is outside the alarm limits. This situation will typically occur when the high temperature limit is set to a temperature below ambient. Once the fluid temperature is within the high and low temperature limits, subsequent excursions beyond those limits will cause the contacts to open.

The AT TEMPERATURE contacts are closed if the fluid temperature is between the high and low temperature limits.

In the example circuit shown below, CR1 is energized when the unit is ON and there are no abnormal conditions. CR2 is energized when there are no abnormal conditions **AND** the fluid temperature is within limits. CR1 can serve as an alarm activator, while CR2 can indicate that the unit is ready to provide cooling fluid to the instrument being cooled.

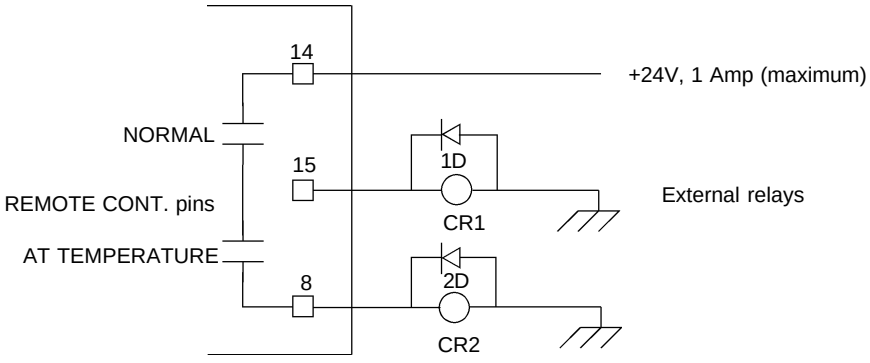

Low Level Switch/Auto Refill

In the example circuit below, when the fluid level in the reservoir drops, DC is applied to the CRE control input to energize the solenoid valve. The valve opens to fill the reservoir. When the fluid level rises, CRE is turned off. If the level does not rise after about 30 seconds, a low level alarm occurs.

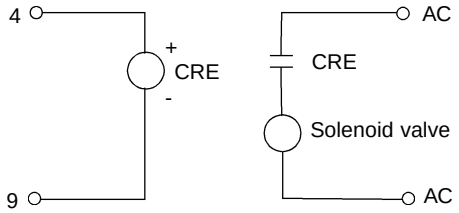

ACCESS Receptacle

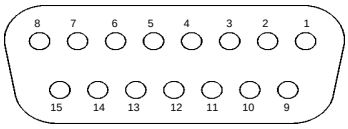

15 pin D-subminiature female receptacle

Pin #	Function
1	Chassis ground.
2	No connection.
3	Span +. Indicates the maximum setpoint value the unit can be set to operate. The temperature scale is 10mV/°C, referenced to analog ground, pin 6 (example: +350mV = +35.0°C).
4	Span -. Indicates the minimum setpoint value the unit can be set to operate. The temperature scale is 10mV/°C, referenced to analog ground, pin 6 (example: +50mV = +5.0°C).
5	AT TEMPERATURE indicator solid state relay drive (TTL output. Part of the alarm circuitry in the REMOTE CONT receptacle). Connect solid state relay drive (-) here, (+) to pin 3 on the REMOTE CONT receptacle to energize relay when the fluid temperature is between the high and low temperature limits. Pin reads 0V when fluid temperature is between limits, -5VDC when out of limits. 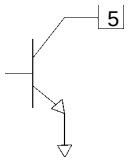
6	Analog ground. The analog ground is physically separated from the power ground throughout the unit. To prevent offsets that result ground currents, the analog and power ground are only connected at the power supply. Analog ground should only be used as a reference pin when no current is flowing.
7	Sensor temperature (current limited through 2.7K OHM resistor). The fluid temperature, as measured by the controller's sensor located in the reservoir, can be read at this pin. The temperature scale is 10mV/°C, referenced to analog ground, pin 6 (example: +150mV = +15.0°C).
8	Setpoint out. The present temperature setpoint can be read at this pin. The temperature scale is 10mV/°C, referenced to analog ground, pin 6 (example: +150mV = +15.0°C).
9	Power ground. This pin should be used for functions that require the unit to draw input or output current. See pin 6.
10	No connection.
11	No connection.

Continued on Next Page

Pin#	Function
12	Digital display (input only). An external voltage can be displayed on the operator panel digital display by applying the voltage to this pin. The display has a low input resistance and a full scale rating of ±1.99VDC. Input is referenced to analog ground, pin 6. The maximum voltage applied to the display should be limited to ±2VDC.
13	-5V. Power supply of -5VDC (15mA maximum).
14	+5V. Power supply of +5VDC (15mA maximum).
15	Setpoint in. The temperature setpoint can be controlled by applying a known voltage to this pin. The temperature scale is 10mV/°C, referenced to analog ground, pin 6 (example: +230mV = +23.0°C. The DISABLE/ENABLE switch must be in the ENABLE position to control the setpoint from this pin.

Access Receptacle Equivalent circuits

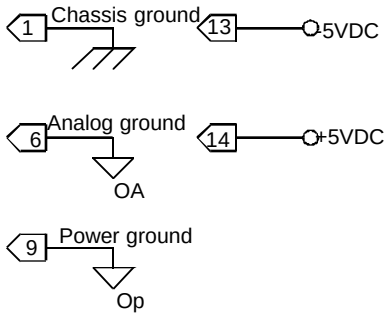

Access Receptacle Circuitry Details

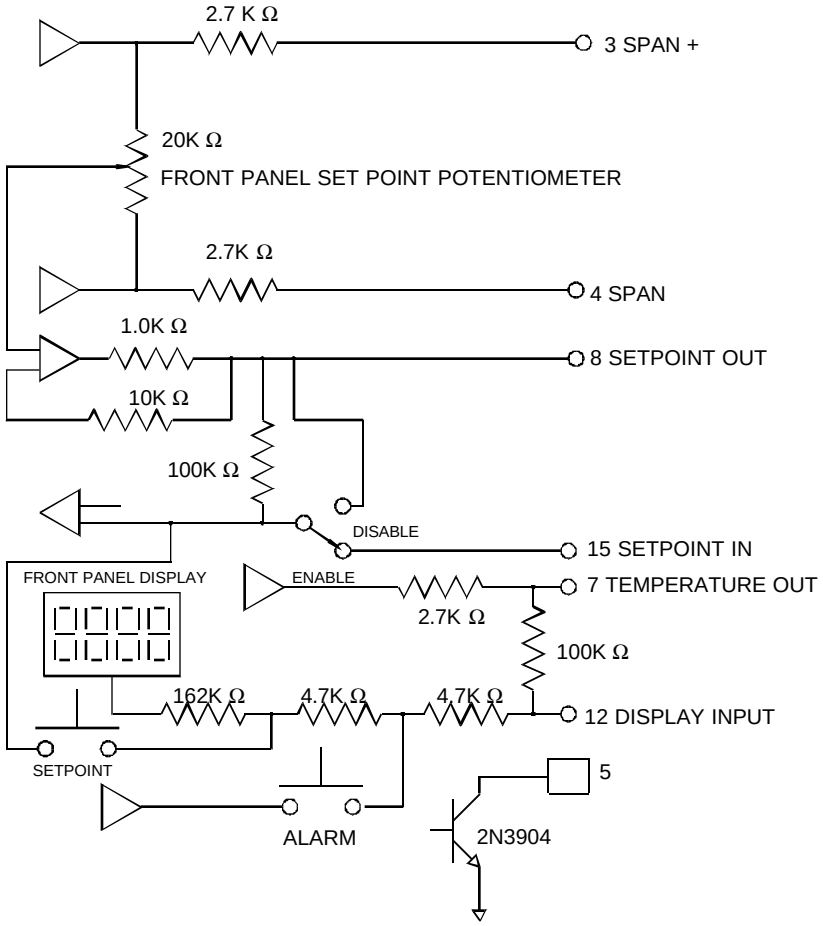

Digital with Interlock Temperature Controller (Optional)

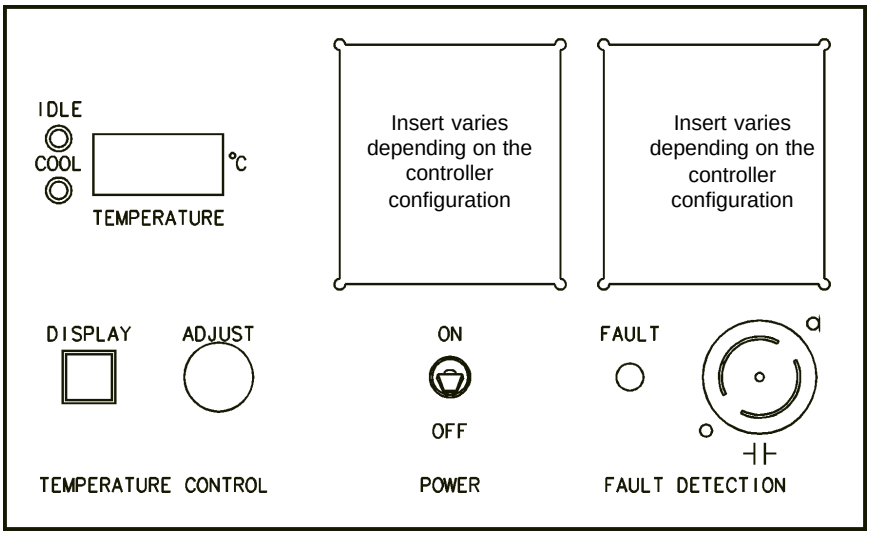

Digital with Interlock Temperature Controller

Description

The Digital with Interlock temperature controller is a Digital temperature . controller with up to four monitoring options: low temperature, high temperature, low fluid level, and low flow. The controller can be built with any combination of these four monitors.

Temperature Control

The Cool and Idle LEDs indicate the status of the refrigeration system. The Idle indicator is lit when the unit is in the hot gas by-pass mode. The Cool indicator is lit when the refrigeration system is removing heat from the cooling fluid. As the fluid temperature approaches the temperature setpoint, the LEDs cycle on and off to indicate the duty cycle of the system. The unit can be in the Cool or the Idle mode, but never both at the same time. A balance between Cool and Idle controls the temperature.

Start Up

Before starting the unit, check all electrical and plumbing connections and make sure the recirculating system (the HX, the instrument being cooled, and the recirculation lines) has been properly filled with cooling fluid. Also make sure the facility water is turned on and the flow control valve is fully closed (see Section V, Flow Control).

Temperature Adjustment

To display the temperature setpoint, press and hold the DISPLAY button. To adjust the temperature setpoint, press and hold the DISPLAY button and turn the ADJUST dial until the desired temperature setpoint is indicated on the TEMPERATURE °C LED display. Once the setpoint is adjusted, release the DISPLAY button. The TEMPERATURE °C display will indicate the temperature of the fluid in the reservoir.

Inadvertent movement of the ADJUST dial will result in a change in the setpoint. The change will not be immediately reflected on the digital display unless the DISPLAY button is pressed. The display will eventually change as the unit responds to the new setpoint.

When the unit is shut off, wait approximately 5 minutes before restarting. This allows time for the refrigeration pressures to equalize. If the pressures are not allowed to equalize, the compressor will short-cycle (clicking sound) and no cooling will occur.

Fault Response

Controllers with a START switch are configured to shut off in the event that a fault occurs. Controllers NOT equipped with a START switch will allow the unit to continue to operate if a fault occurs. This option is available for customers who are willing to accept the risk of damage to the unit in order to continue to provide cooling fluid to the instrument being cooled.

With either controller configuration, the relay contacts connected to the controller receptacle will open and the FAULT indicator will light if a fault occurs. The cause of the fault must be identified and corrected before the unit can be restarted.

START Switch

If the controller is equipped with a START switch, a fault will cause the unit to shut down. Press the START switch to restart the unit after the fault has been corrected. If the fault has not been corrected, the unit will not start and the FAULT indicator will light when the START switch is pressed.

Temperature Monitors

The optional high and low temperature monitors are connected to sensors that monitor the temperature of the cooling fluid as it exits the reservoir. The monitors protect the system from exposure to excessively hot or cold cooling fluid. A temperature fault occurs when the fluid temperature exceeds the set temperature limit.

To adjust either temperature monitor, turn the appropriate calibrated dial to the desired temperature limit.

Low Fluid Level Monitor

The low fluid level monitor is connected to a float switch in the reservoir. If the controller is equipped with a LOW LEVEL indicator, the low level monitor is not connected to the fault circuit. The indicator will light if the reservoir cooling fluid drops below the operating level. The indicator serves only as a warning. A fault will not occur as a result of a low level condition.

If the controller is NOT equipped with a LOW LEVEL indicator, the low level monitor is connected to the fault current. A fault will occur if the reservoir cooling fluid level drops below the operating level.

Low Flow Monitor

The optional low flow monitor is connected to a flow switch in the RETURN line. A low flow fault occurs when the flow rate of the returning cooling fluid drops below 0.3 gallons per minute (1.0 liters per minute).

When starting a unit with a controller equipped with both a low flow monitor and a START switch, the START switch must be held in the ON position until the flow switch “closes” (2 or 3 seconds). If time is not allowed for the flow switch to close, the unit will stop when the START switch is released.

Interlock Relay Contacts

A set of contacts are connected to a receptacle on the operator panel. The contacts are rated 15A, 125V. This is not a power inlet or outlet. The receptacle is isolated from the circuitry. Its ground pin is connected to the chassis. The contacts are normally open: they are closed when the unit is running normally (no faults present), and they are open when the unit is off or when a fault occurs.

Remote Digital Temperature Controller (Optional)

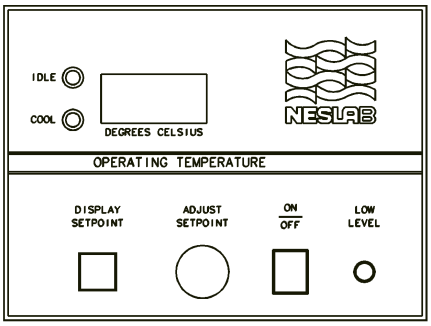

Remote Digital Temperature Controller - Front Panel

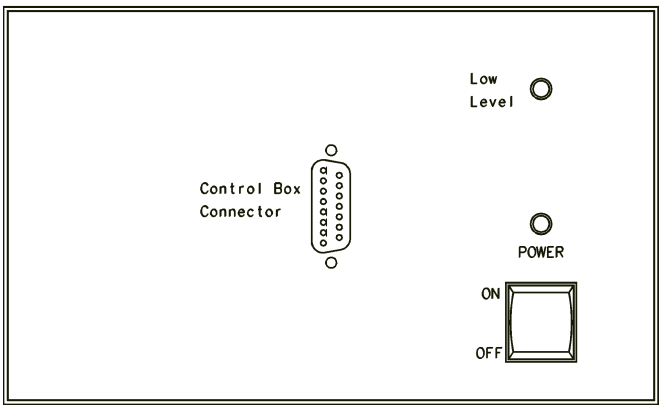

Remote Temperature Controller

Installation

Controller dimensions are 4¾" x 7¾" x 3¾" (H x W x D).

Connect the Digital remote box to the unit by securing the connector on the remote box's cable to the Control Box Connector receptacle on the operator panel on the front of the case top.

Temperature Control

The Cool and Idle LEDs indicate the status of the refrigeration system. The Idle indicator is lit when the unit is in the hot gas by-pass mode. The Cool indicator is lit when the refrigeration system is removing heat from the cooling fluid. As the fluid temperature approaches the temperature setpoint, the LEDs cycle on and off to indicate the duty cycle of the system. The unit can be in the Cool or the Idle mode, but never both at the same time. A balance between Cool and Idle controls the temperature.

Start Up

Before starting the unit, check all electrical and plumbing connections and make sure the recirculating system (the HX, the instrument being cooled, and the recirculation lines) has been properly filled with cooling fluid. Also make sure the facility water is turned on and the flow control valve is fully closed (see Section V, Flow Control).

To start the unit, place the ON/OFF switch on the operator panel of the unit in the ON position and press the ON/OFF button on the remote box. The pump and refrigeration system will start, the POWER indicator on the operator panel will light and the DEGREES CELSIUS display on the remote box will indicate the fluid temperature. Either ON/OFF switch will shut the unit off.

Temperature Adjustment

To display the temperature setpoint, press and hold the DISPLAY/ SETPOINT button. To adjust the setpoint, press and hold the DISPLAY/SETPOINT button and turn the ADJUST SETPOINT dial until the desired temperature setpoint is indicated on the DEGREES CELSIUS LED display. Once the setpoint is adjusted, release the DISPLAY/SETPOINT button. The DEGREES CELSIUS LED display will indicate the temperature of the fluid in the reservoir.

Inadvertent movement of the ADJUST SETPOINT dial will result in a change in the setpoint. The change will not be immediately reflected on the digital display unless the DISPLAY/SETPOINT button is pressed. The display will eventually change as the unit responds to the new setpoint.

When the unit is shut off, wait approximately 5 minutes before restarting. This allows time for the refrigeration pressures to equalize. If the pressures are not allowed to equalize, the compressor will short-cycle (clicking sound) and no cooling will occur.

Low Level Warning

The LOW LEVEL indicator is connected to a float switch in the reservoir. The indicator warns the user of a low cooling fluid level in the reservoir. A low fluid level condition occurs when the cooling fluid in the reservoir drops below the operating level. The indicator serves only as a warning. The unit will not shut down as a result of a low fluid level condition.

Flow Control

The flow control handle is located on the right side of the unit. The handle is connected to a valve that controls the flow of fluid to your application.

When the handle is in the vertical “+” position, the valve is open and all fluid is supplied to your application. When the handle is in the horizontal “0” position, the valve is closed and no fluid is supplied to your application. When the handle is between these two positions, the flow rate of the fluid is between full flow and no flow. Use a flow meter on the RECIRCULATING FLUID OUTLET to adjust the desired flow rate.

Ensure the flow control handle is in a slightly open position before starting the unit. Once the unit is running, slowly adjust the handle to the desired flow rate. Never start the unit with the handle in the full closed “0” position and never “crank” the valve wide open from the closed or slightly open position.

The pressure gauge next to the flow control valve (labelled RECIRCULATING PRESSURE) indicates the operating pressure of the system.

High and Low Pressure Cutout

High and low pressure cutouts prevent excessively high and low refrigeration pressures that can damage the unit. The cutouts are connected to a pressure gauge that monitors pressure at the suction sideof the compressor.

In the event of a low refrigeration pressure fault, the unit will shut down and must be manually restarted.

In the event of a high refrigeration pressure fault, the unit will shut down. However, the unit will automatically restart once the refrigeration pressure drops below the cutout level.

Pressure Switch

An adjustable pressure switch, located next to the flow switch on the RECIRCULATING FLUID RETURN line, prevents the unit from operating under excessively high recirculating pressure. If the operating pressure exceeds the pre-set limit, the unit will shut down. The fault must be identified and corrected before the unit can be restarted.

If adjustment is required, contact our Service Department for assistance.

Pump Motor Overload Protector

An overload protector prevents the pump motor from exposure to excessively high current. If an overload condition occurs, due, for example, to a heavy work load, the overload protector shuts the unit down. The overload protector automatically resets after approximately two minutes. The source of the overload must be identified and corrected before the unit will restart.

External Pressure Regulator (Optional)

For applications requiring a maximum pressure less than 55 psi, an External Pressure Reducer (EPR) is available. An EPR allows an adjustable operating pressure of 10 to 50 psi. If the pressure of the fluid leaving the unit exceeds the valve setting the relief valve will bypass the fluid back into the unit to relieve the pressure. The pressure of the system is determined by the back pressure of the connected equipment and the flow rate of the recirculating fluid to your application.

Connect the EPR assembly as shown below. Tighten the hose clamps tight enough to prevent leakage. Do not over-tighten or the clamps will “bite” into the flexible tubbing and can cause excessive wear.

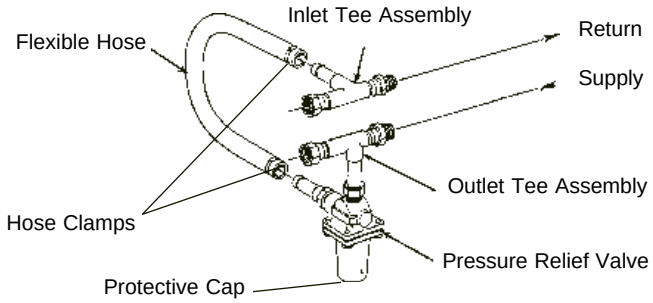

Connect the outlet tee assembly to the inlet of your application. Connect the inlet tee assembly to the outlet of your application.

Adjustment

When adjusting the relief valve some leaking may occur, place a container under the valve during adjustment.

Remove the protective cap and locate a threaded fitting with a slot for a large screwdriver. Hold the threaded fitting in place and loosen the lock nut on the valve body until it is almost flush with the threaded fitting. Unscrew the threaded fitting three to four turns. (If the threaded fitting unscrews completely from the valve housing, screw it back in two to three turns.)

To simulate blockage, close (or pinch off) the hose between the EPR outlet tee assembly and your application. Monitor the operating pressure of the HX unit. Turn the threaded fitting until the desired relief pressure is set (the EPR valve cannot be set lower than the total back pressure of your instrument, or flow will not be received).

Tighten the locknut to secure the position of the threaded fitting. Open the hose between the EPR outlet tee assembly and your application.

Section V Maintenance

Service Contracts

NESLAB offers on-site Service Contracts that are designed to provide extended life and minimal downtime for your unit. For more information, contact our Service Department. Phone numbers and addresses for all our Sales and Service Centers are located in the front of this manual (see Preface, After-sale Support) and on the back cover of this manual.

Cleaning

Periodically inspect the reservoir. If cleaning is necessary, flush the reservoir with a cleaning fluid compatible with the circulating system and the cooling fluid.

The cooling fluid should be replaced periodically when operating at low temperatures. The concentration of water in the cooling fluid will increase over time, leading to a reduction in the cooling capacity.

Before changing the cooling fluid, raise the operating temperature of the unit to de-ice the reservoir. Refer to Section III, Filling Requirements for instructions on replacing the cooling fluid.

Pump Strainer

A wire mesh pump strainer is located in the reservoir on the pump suction line. If debris is drawn into the reservoir, the strainer will prevent the material from being drawn into the pump and damaging the pump vanes.

Inspect the strainer whenever the reservoir is checked for cleanliness (see Section V, Cleaning). If the strainer is visibly clogged, cleaning is required.

Disconnect the line cord from the power source and drain the reservoir before cleaning the strainer.

Cover the strainer with a baggie to catch any debris which may become free. Unscrew the strainer and rinse it with water. Replace the strainer. Refer to III, Filling Requirements for instructions on replacing cooling fluid.



Strainer

Section VI Troubleshooting

Checklist

Unit will not start.
Check house circuit breaker.

Ensure power source meets specified voltage, ±10%. Refer to the serial number label on the rear of the unit to identify specific electrical requirements.

Make sure the facility water is connected to the FACILITY WATER INLET.

Unit will not circulate.
Check pump strainer (see Section V, Pump Strainer).

Check for obstructions or kinks in the tubing between the unit and the instrument being cooled.

Check pressure gauge reading. If reading is “0” with flow, the gauge may be faulty. Verify by placing a second gauge in the RECIRCULATING WATER OUTLET line.

Inadequate temperature control.
Check installation of unit for compliance with conditions in Section III.

Make sure instrument being cooled has not overcome the cooling capacity of the unit (see Section II, Specifications).

Service Assistance

If, after these troubleshooting steps, your unit fails to operate properly, contact our Service Department. Phone numbers and addresses for all our Sales and Service Centers are located in the front of this manual (see Preface, After-sale Support) and on the back cover of this manual. Before calling, please obtain the following information:

BOM number
Serial number
Voltage of unit
Voltage of power source
Temperature of facility water

Parts List

Our Service Department can provide you with a complete list of spare parts for your HX-540 Recirculating Chiller. Phone numbers and addresses for all our Sales and Service Centers are printed on the back cover of this manual. Before calling, please obtain the following information:

BOM number
Serial number

Front View

Section VII Diagrams

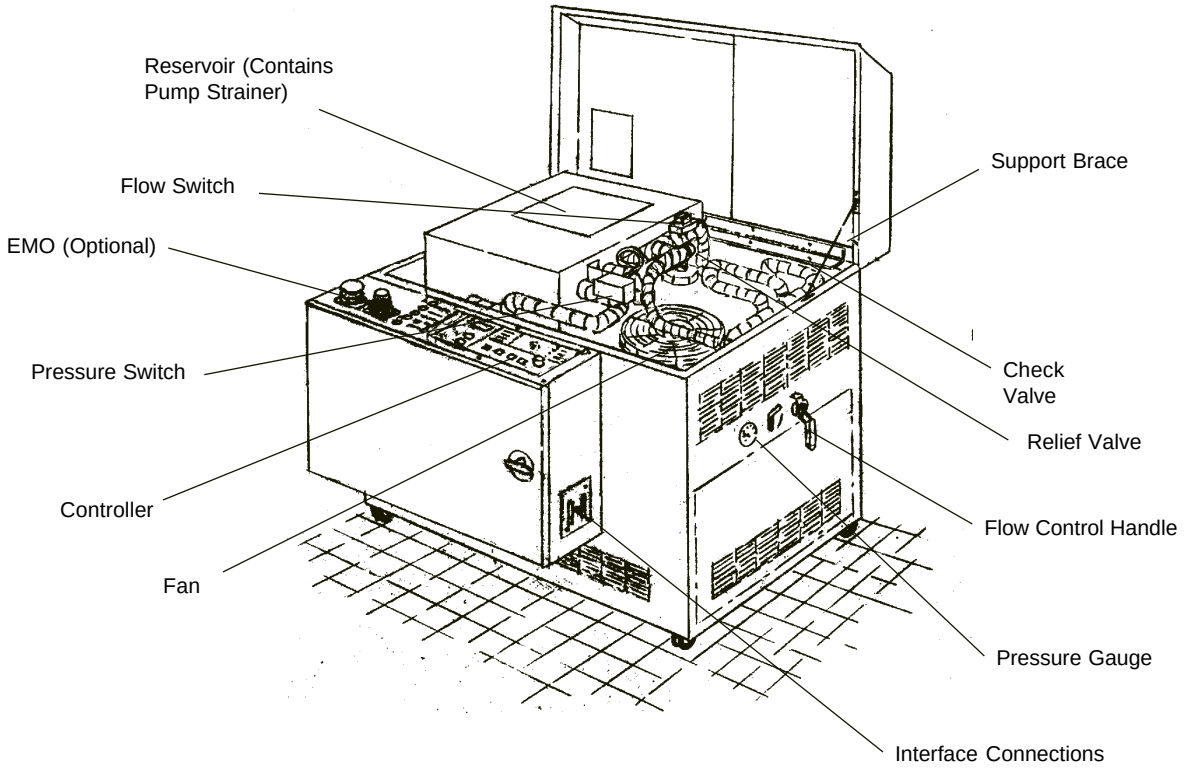

Rear View

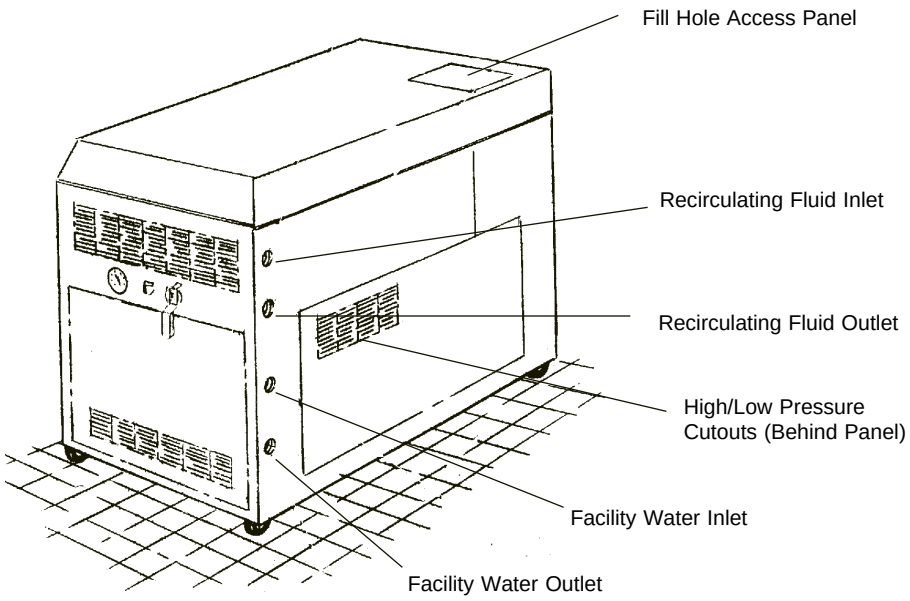

Flow Diagram

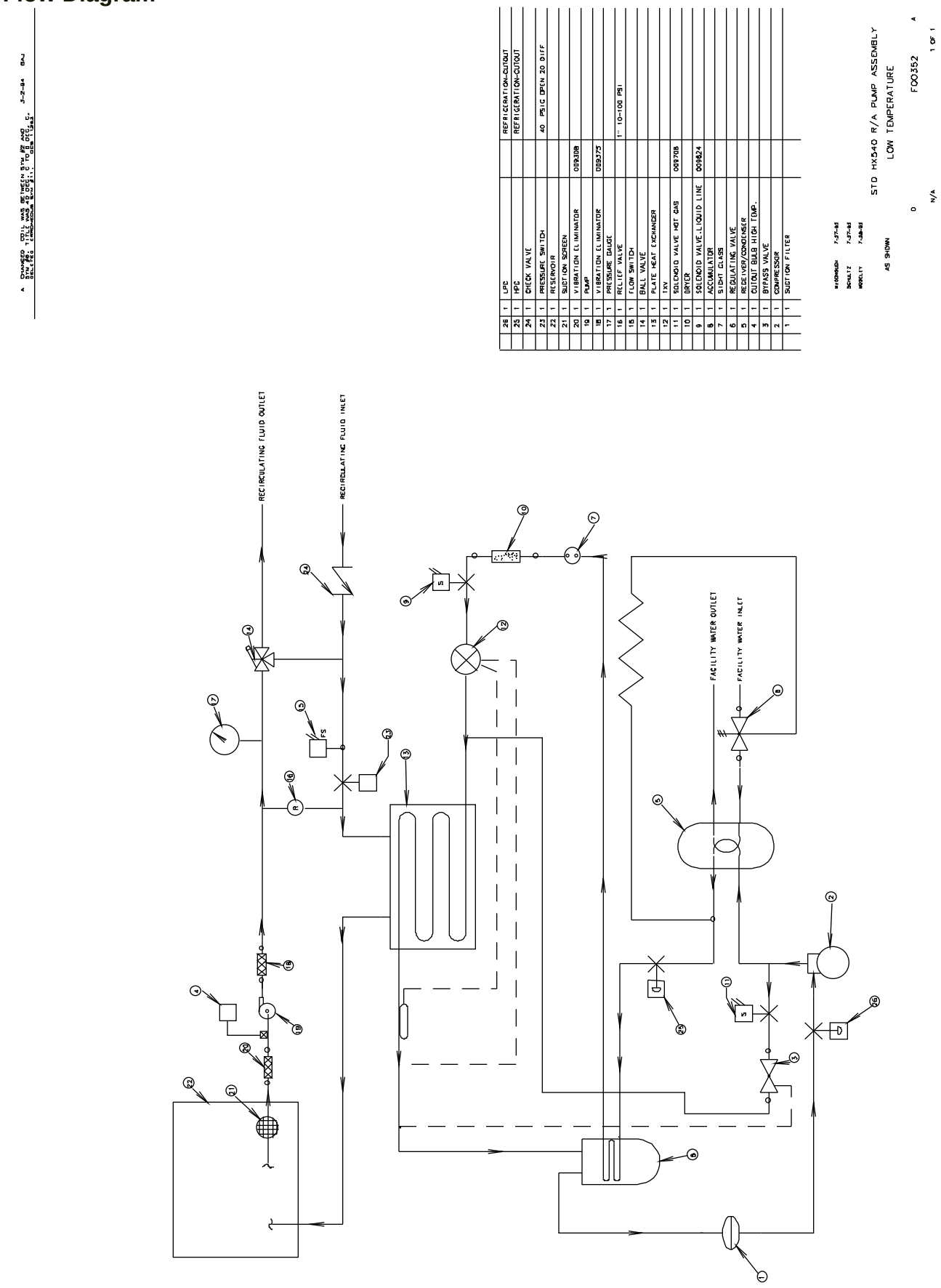

26	1	LPC		REFRIGERATION-CUTOUT
25	1	HPC		REFRIGERATION-CUTOUT
24	1	CHECK VALVE		
23	1	PRESSURE SWITCH		40 PSIG OPEN ZD DIFF
22	1	RESERVOIR		
21	1	SUCTION SCREEN		
20	1	VIBRATION ELIMINATOR	009398	
19	1	PUMP		
18	1	VIBRATION ELIMINATOR	008375	
17	1	PRESSURE GAUGE		1"- 100 PSI
16	1	RELIEF VALVE		
15	1	FLOW SWITCH		
14	1	BALL VALVE		
13	1	PLATE HEAT EXCHANGER		
12	1	TXV		
11	1	SOLENOID VALVE HOT GAS	009708	
10	1	DRYER		
9	1	SOLENOID VALVE-LIQUID LINE	009824	
8	1	ACCUMULATOR		
7	1	SIGHT GLASS		
6	1	REGULATING VALVE		
5	1	RECEIVER/CONDENSER		
4	1	CUTOUT BULB HIGH TEMP.		
3	1	BYPASS VALVE		
2	1	COMPRESSOR		
1	1	SUCTION FILTER		

Appendix A DeltaTemp Programming Software

DeltaTemp programming software is now available for free download from NESLAB ONLINE BBS (Bulletin Board System) at 603-427-2490.

DeltaTemp software allows you to write custom temperature programs for NESLAB digital units (any unit with a digital temperature readout AND a 10-15 pin INTERFACE port). The menu-driven program provides a table format for entering temperature parameters and a visual graph confirmation of the program you have designed. Program time can range from 0 to 999 minutes with unlimited looping. Choose upper and lower temperature limits and monitor system status with an audible alarm. DeltaTemp can also record your results on a printed graph or file. DeltaTemp is a DOS program, and requires an IBM or 100% compatible computer.

DeltaTemp may require use of a computer interface device, depending on which NESLAB unit is being used. Refer to the setup diagram in the DeltaTemp folder for full details.

To download the software, go to: CONFERENCES / SOFTWARE / DeltaTemp.

The folder also contains the operating manual, setup diagrams, application notes, and directions on making your own interface cable.

NESLAB ONLINE is a FirstClass® system accessible by general terminal software (Windows Terminal accessory, ClarisWorks Communications, Z-Term, Pro-Comm, or similar).

To use the full graphics and features of the BBS we recommend using FirstClass® Client software. FirstClass® Client is available for Macintosh or Windows platforms. It is available from many sources:

NESLAB ONLINE
Mac: Conferences/Software/Macintosh
Windows: Conferences/Software/Windows

AMERICA ONLINE
Mac: Computing/software center/mac communications forum/industry connection/softarc
Windows: Computing/software center/communications programs

COMPUSERVE:
Mac: TWEUROPA/Teletools/FCMAC.ZIP
Windows: PCBBS/BBS programs/FC300.EXE

WORLD WIDE WEB
http://www.softarc.com/try.htm

Appendix B International Quick Reference Guides

HX-540 Kurzbedienungsanleitung

Installation

Stellen Sie das Gerät in einer sauberen Umgebung mit einfachem Zugang zu einem Gebäudewasseranschluß und einem Abfluß auf. Das Gebäudewasser muß den in der Anleitung festgelegten Anforderungen genügen, sonst wird die Leistung des Gerätes herabgesetzt. Unzureichende Wasserzufuhr kann zu einer Überhitzung des Kompressors und so zu einem Ausfall des Gerätes führen.

Vergewissern Sie sich, daß die Spannung Ihrer Stromanschlüsse mit der für das Gerät vorgesehenen Spannung übereinstimmt (±10%).

Die Schlauchanschlüsse des Gerätes befinden sich an der Rückseite und sind mit FACILITY WATER INLET und OUTLET und RECIRCULATING FLUID INLET und OUTLET bezeichnet. Bitte entfernen Sie die Gummiabdichtung von allen Anschlüssen. Schließen Sie den FACILITY WATER INLET-Anschluß an das Gebäudewasser und den FACILITY WATER OUTLET-Anschluß an den Abfluß an. Schließen Sie den RECIRCULATING FLUID INLET-Anschluß an den Ausgang Ihres Instruments und den RECIRCULATING FLUID OUTLET-Anschluß an den Eingang Ihres Instruments an.

Für den Betrieb bei allen Zirkulations- oder Umgebungstemperaturen muß eine nicht gefrierende Flüssigkeit verwendet werden. Die gewählte Flüssigkeit muß eine Viskosität von maximal 50 Centistokes bei der niedrigsten möglichen Betriebstemperatur haben.

Um das Reservoir zu füllen, öffnen Sie die Abdeckplatte in der linken hinteren Ecke der Gehäuseoberseite und entfernen Sie die Reservoirabdeckung, indem Sie die Flügelschrauben lösen. Füllen Sie das Reservoir bis 2 Zoll unterhalb des Randes (dieser Stand sollte erreicht werden, wenn das Gerät die gewünschte Betriebstemperatur erreicht hat). Wenn das zu kühlende Instrument und die Zirkulationsleitungen sehr viel Kühlflüssigkeit aufnehmen können, sollten Sie zusätzliche Kühlflüssigkeit zur Hand haben, um gegebenenfalls nachfüllen zu können.

Inbetriebnahme

Vor Inbetriebnahme des Gerätes vergewissern Sie sich bitte, daß die Montagemuttern des Kompressors gelöst wurden und das Gebäudewasser angestellt ist.Überprüfen Sie, ob die elektrischen Anschlüsse und die Rohr- u. Schlauchanschlüsse sachgemäß installiert sind und daß das gesamte System mit Kühlflüssigkeit gefüllt ist.

Das Gerät muß vor dem Starten mindestens 12 Stunden an die Stromversorgung angeschlossen werden, damit das Öl im Kompressor erwärmt werden kann und sich von der Kühlflüssigkeit abscheiden kann.

Um das Gerät einzuschalten, müssen Sie den Hauptschalter auf „ON“ stellen. Die „COOL“- und „IDLE“-Anzeigen auf der Steuertafel geben den Status des Kühlsystems an. Die COOL-Anzeige leuchtet, wenn das Kühlsystem der Kühlflüssigkeit Wärme entzieht. Die HEAT-Anzeige leuchtet, wenn sich das Gerät im Hot Gas Bypass Modus befindet.Wenn die Temperatur der Kühlflüssigkeit sich der gewünschten Temperatur nähert, blinken die Anzeigen, um den Arbeitszyklus des Systems anzugeben.

Nach dem Ausschalten des Gerätes sollten Sie vor dem Wiedereinschalten ca. 5 Minuten warten, damit das Kühlsystem einen Druckausgleich durchführen kann. Beachtet man diese Wartezeit nicht, kommt es zu kurzen Schaltfrequenzen des Kompressors und eine Kühlung ist nicht möglich.

Um sich den Temperatur-Setpoint anzeigen zu lassen, drücken Sie den SETPOINT/ACTUAL

TEMP-Schalter und halten Sie ihn gedrückt. Um den Temperatur-Setpoint einzustellen, drücken Sie den Setpoint/Actual-Schalter, halten diesen, und drehen gleichzeitig den ADJUST-Schalter so lange, bis die gewünschte Temperatur in der Digitalanzeige angezeigt wird. Wenn die Temperatur eingestellt ist, lassen Sie den Setpoint/ Actual-Schalter los. Die Digitalanzeige zeigt dann die Temperatur der Kühlflüssigkeit im Reservoir an.

Flußsteuerung

Der RECIRCULATION FLOW CONTROL Hebel kontrolliert die Durchflußmenge der Kühlflüssigkeit zu Ihrer Anwendung. In der „+“-Stellung wird die gesamte verfügbare Kühlflüssigkeit an die Anwendung abgegeben, in der „-“-Stellung wird keine Kühlflüssigkeit an die Anwendung abgegeben.

Wartung

Überprüfen Sie regelmäßig die Kühlflüssigkeit im Reservoir. Sollte eine Säuberung notwendig sein, spülen Sie das Reservoir mit einer speziellen Reinigungsflüssigkeit, die mit dem Umlaufsystem und der Kühlflüssigkeit kompatibel ist.

Das Kühlmittel sollten Sie regelmäßig erneuern. Wenn Sie das Gerät bei niedrigen Temperaturen betreiben, erhöht sich mit der Zeit der Wasseranteil in der Kühlflüssigkeit. Dies führt zum Verlust von Kühlkapazität.

Regelmäßiges Absaugen des Kondensor-Heizkörpers ist erforderlich. Die Reinigungshäufigkeit hängt von der Betriebsumgebung ab. Eine monatliche Überprüfung des Kondensors ist empfehlenswert. So werden Sie nach einigen Monaten einen Reinigungsrhythmus gefunden haben.

Das Gerät ist mit einem Pumpenfilter ausgestattet. Der Filter sorgt dafür, daß kleine Teilchen und Schmutzablagerungen nicht in die Pumpe gelangen und so die Pumpflügel beschädigen können.

Nach der Erstinstallation kann es zu einer Blockierung des Filters kommen. Die erste Reinigung sollte daher nach einer Woche erfolgen. Danach empfehlen wir eine monatliche Überprüfung des Filters. So können Sie nach einiger Zeit abschätzen, wie oft der Filter gereinigt werden muß.

Bevor Sie den Filter reinigen, ziehen Sie den Netzstecker aus der Steckdose und leeren Sie das Reservoir.

HX-540 Kvik referance.

Installation:
Opstilles i rene omgivelser.
Steder med meget støv skal undgåes, og periodisk rensning skal udføres, hvis utilsigtet nedbrud skal undgåes. Opbygning af støv vil medføre fald i kølekapasiteten og i værste fald overophedning af systemet.

Check at netspændingen er den nominelle 240V ± max. 10%.

Slangetilgang er på bagsiden mærket „FACILITY WATER INLET“ (ind) og „OUTLET“ (ud), samt Recirkulering „INLET“ og „OUTLET“. Inden tilslutning af fittings fjernes plaststøvkappen fra rørstudsene. „RECIRCULATING FLUID INLET“ tilsluttes den UDGANGEN på det emne, som skal TERMOSTATERES og „RECIRCULATING FLUID OUTLET“ til ind på emnet.

Fyldning af reservoiret foregår ved at fjerne panelet, som er forsynet med fingerskruer, og påfyld egnet rent kølevæske, max 5 cm fra toppen.

Betjening:
Før opstart checkes elektriske forbindelser, slangeforbindelser, væske stand, kompresseor og brugsvand er tilsluttet.
Systemet skal være tændt mindst 12 timer før det sættes igang.
Check hovedkontakten på badet. „Cool“ og „Idle“ LED viser status på badet.

Ønskes den instillede temperatur vist, hold da „Setpoint/Actual Temp“ kontakterne inde. Skal indstillingen ændres, skal der samtidig drejes på justeringsknappen.
Displayet vil skifte tilbage til aktuel temperatur.

Flow kontrol:
Drej på „RECIRCULATING FLOW CONTROL“ + for at åbne og - for at lukke.

Periodisk vedligeholdelse:
Check standen af væske periodisk. Check med mellemrum vakuumet på pumpesiden, rens systemet og check for aflejringer, vækst, utætheder, check vakuumpumpen med kondenser og evt. filtre. Husk åben aldrig instrumentet uden strømmen er afbrudt, og strømkablet er taget ud!

Kortfattad Bruksanvisning för HX-540

Installation
Ställ maskinen i en ren miljö med lätt tillgång till kylningsvatten och ett vattenavlopp. Kylningsvattnet måste möta de krav som är specifierade i instruktionerna annars minskas maskinens prestations förmåga.

Försäkra att spänningen är den samma som den som är given i instruktionerna ± 10%.

Röranslutningarna finns på baksidan av maskinen och är märkta “FACILITY WATER INLET/OUT-LET” och ”RECIRCULATING FLUID INLET/ OUTLET”. Ta bort de skyddande plast bitarna. Anslut “FACILITY WATER INLET” inpassningen till byggnadens kylvatten och “FACILITY WATER OUTLET” inpassningen till avloppet. Anslut “RECIRCULATING FLUID INLET” inpassningen till utsläppet av din anordning och “RECIRCULATING FLUID OUTLET” inpassningen till insläppet av din anordning.

För att fylla tanken, öppna luckan på den bakre vänstra delen av toppen på maskinen och lösgör skruvarna som håller den undre luckan på plats. Fyll tanken tills 2,5 cm återstår. Var beredd att fylla på om din anordning kräver extra vätska.

Vanligt kran vatten är den rekommenderade vätskan vid en temperatur mellan +8°C och +80°C. Under +8°C måste en vätska som inte fryser användas. En blandning av vanligt vatten och etylenglykol (laboratorie kvalitet) föreslås.

Användning
Innan maskinen startas, kontrollera alla elektriska och alla rör anslutningar. Se till att cirkulations systemen har fyllts med vätska.

Var säker på att byggnads vattnet är påsatt.

På alla modeller från HX-200 till HX-750 måste maskinen vara kopplad till energikällan minst 12 timmar innan användning så att oljan tillåts att värmas upp och separera från köldmedlet.

Sätt start knappen på ON för att starta maskinen. COOL och IDLE på framsidan visar statusen på kylningssystemet. Cool lyser när värme tas bort från köldmedlet. Heat är på när “the hot gas bypass mode” används. När temperaturen närmar sig den förbestämda önskade temperaturen kommer de två att växla.

Vänta 5 minuter innan maskinen sätts på igen efter att ha varit avstängd för att låta kylningstrycken att utjämnas. Ingen kylning kommer att utföras om inte trycken tillåts att utjämnas.

Temperatur Ändring
Håll Display knappen intryckt för att visa den önskade temperaturen. Håll Display knappen intryckt och vrid Adjust knappen för att ändra den önskade temperaturen. Släpp Display knappen efter att den önskade temperaturen visas på kontroll panelen. Temperaturen på vätskan i tanken visas nu på kontroll panelen.

Flödeskontroll
“RECIRCULATING FLOW CONTROL” handtaget kontrollerar flödet till din anordning. i “+” positionen får man fullt flöde, “-” positionen innebär inget flöde.

Periodiskt Underhåll
Inspektera vätskan i tanken periodiskt. Om rengöring är nödvändigt, spola tanken med en rengörings vätska som är förenlig med cirkulationssystemet och kylvätskan.

Kylvätskan bör bytas periodvis. När enheten används vid låga temperaturer kommer vätskans koncentration av vatten att öka vilket leder till en minskad kylningskapacitet.

Periodisk rengöring av kondensorn är nödvändig. Hur ofta rengöring är nödvändig beror på miljön. Vi rekommenderar en visuell inspektion av kondensorn varje månad efter installation. Efter flera månader kan det avgöras hur ofta kondensorn måste rengöras i framtiden.

Maskiner med PD och TU pumpar har ett filter. Filtret måste rengöras efter en veckas användning. Efter första rengöringen bör filtret inspekteras varje månad. Efter flera månader kan det avgöras hur ofta filtret måsta rengöras.

Drag ur kontakten och töm tanken innan filtret rengörs.

HX-540, Handleiding voor snelle installatieprocedures

Installatie

Plaats het apparaat in een omgeving waar gebouwenwater en afvoer binnen handbereik zijn. De eisen van de waterfaciliteiten moeten overeenkomen met die gespecificeerd in de handleiding, anders zal het apparaat onvoldoende prestaties leveren.
Onvoldoende watertoevoer kan ertoe leiden dat de compressor oververhit raakt en het apparaat uitgeschakeld wordt.

Let erop dat de netspanning gelijk is aan het aangegeven voltage, ±10%.

De slangaansluitingen zijn bevestigd aan de achterkant van het apparaat en zijn voorzien van de labels FACILITY WATER INLET en OUTLET, en RECIRCULATING FLUID INLET en OUTLET. Verwijder de plastic beschermings-pluggen van alle slangaansluitingen. De FACILITY WATER INLET dient bevestigt te worden aan een watertoevoer en de FACILITY WATER OUTLET dient bevestigt te worden aan een afvoer. Bevestig de RECIRCULATING FLUID INLET aan de uitgang van uw applicatie en de RECIRCULATING FLUID OUTLET aan de ingang van uw applicatie.

Een non-freezing vloeistof wordt in het algemeen aanbevolen, indien u werkt bij omgevingstemperatuur. De gekozen vloeistof moet een viscositeit hebben van 50 Centistokes of minder wanneer circulatie gewenst is bij lage temperaturen..

Om het reservoir te vullen dient men het toegangspaneel aan de linkerachterkant te verwijderen door middel van het losdraaien van de duimschroeven. Vul nu het reservoir tot 2 inches van het maximum wanneer het apparaat de gewenste temperatuur heeft bereikt. Indien de vloeistoflevel van uw toepassingen en de toe-afvoer leidingen voldoende zijn.

Operationeel gebruik

Alvorens het apparaat te starten, dient u ervan verzekerd te zijn dat de schroeven in de compres-sor losgedraaid zijn en dat er gebouwenwater is. Controleer alle elekstricheen slangaansluitingen. Controleer ook of het systeem gevuld is met koelvloeistof.

Het apparaat dient 12 uur aangesloten te zijn aan de netspanning, zodat de olie verhit kan worden en gescheiden kan worden van de koelvloeistof.

Om het apparaat te starten moet men de schakelaar op “ON” zetten. De “Cool” en “Idle LEDs” aan de voorkant van het apparaat duiden de status van het koelsysteem aan. “COOL” is in werking wanneer het apparaat warmte van de koelvloeistof onttrekt, “HEAT” is in werking gesteld wanneer het apparaat in de Hot Gass Bypass stand is gesteld. Als de ingegeven temperatuur bereikt is zal de LED switchen.

Wanneer het apparaat uitgeschakeld is, gelieve 5 minuten te wachten alvorens u het apparaat weer in werking stelt. Deze tijd is nodig om drukken in het koelsysteem gelijk te stellen.
Indien dit niet gebeurt, zal er short-cycle optreden binnen de compressor en er vindt geen koeling plaats.

Om de temperatuur set-point af te kunnen lezen van de display, houdt u de Setpoint/Actual Temp knop ingedrukt. Om de temperatuur set-point aan te passen, houdt u de Setpoint/Actual Temp knop ingedrukt en draait u de Adjust knop net zolang, totdat de gewenste temperatuur set-point op de display af te lezen is.
Als de set-point bereikt is kunt u de Setpoint/Actual knop loslaten. De display zal nu de temperatuur weergeven van het koelvloeistof in het reservoir.

Het apparaat kan uitgerust zijn met een van de meerdere optionele regelaars. Mocht dit het geval zijn, kunt u het beste de gedetailleerde handleiding raadplegen betreffende het gebruik daarvan.

Flow Control
Met de RECIRCULATING FLOW CONTROL kunt u het debiet van uw applicatie regelen. In de “+” positie geeft u een volledig debiet, de “-” positie geeft u geen debiet.

Periodiek Onderhoud
De vloeistof dient regelmatig gecontroleerd te worden. Indien reiniging noodzakelijk is, zal het reservoir gespoeld moeten worden met een vloeistof, welke vergelijkbaar is met het circulatiesysteem en de koelvloeistof.

De koelvloeistof dient regelmatig vervangen te worden. Wanneer u werkt met lage temperaturen zal de concentratie van het water in de koelvloeistof gedurende die tijd toenemen, wat verlies van koelcapaciteit tot gevolg kan hebben.

Periodiek lucht vrijmaken van de condensor is noodzakelijk. Het aantal malen dat dit moet gebeuren hangt af van de omgeving waar het apparaat staat opgesteld en gebruikt wordt. Wij raden een algemene maandelijkse inspektie van de condensor aan na de installatie. Na enkele maanden zal duidelijk zijn hoe vaak men het apparaat moet reinigen.

Het apparaat heeft een pompafvoer. Indien vuil in het systeem aanwezig is, zal de afvoer ervoor zorgen dat het materiaal niet in de pomp terecht komt en daardoor de pomp niet beschadigd.

Nadat het apparaat geinstalleerd is zou de afvoer verstopt kunnen raken. De afvoer zal in de eerste week na de installatie schoongemaakt moeten worden. Nadat dit gebeurt is, is een maandelijkse inspektie aan te raden. Na enkele maanden zal duidelijk zijn hoe vaak men de afvoer moet reinigen.

Alvorens de afvoer te reinigen, gelieve het apparaat uit te schakelen en het reservoir te ledigen.

Kortfattad Bruksanvisning för HX-540

Installation
Ställ maskinen i en ren miljö med lätt tillgång till kylningsvatten och ett vattenavlopp. Kylningsvattnet måste möta de krav som är specifierade i instruktionerna annars minskas maskinens prestations förmåga.

Försäkra att spänningen är den samma som den som är given i instruktionerna ±10%.

Röranslutningarna finns på baksidan av maskinen och är märkta “FACILITY WATER INLET/OUT-LET” och ”RECIRCULATING FLUID INLET/ OUTLET”. Ta bort de skyddande plast bitarna. Anslut “FACILITY WATER INLET” inpassningen till byggnadens kylvatten och “FACILITY WATER OUTLET” inpassningen till avloppet. Anslut “RECIRCULATING FLUID INLET” inpassningen till utsläppet av din anordning och “RECIRCULATING FLUID OUTLET” inpassningen till insläppet av din anordning.

För att fylla tanken, öppna luckan på den bakre vänstra delen av toppen på maskinen och lösgör skruvarna som håller den undre luckan på plats. Fyll tanken tills 2,5 cm återstår. Var beredd att fylla på om din anordning kräver extra vätska.

Vanligt kran vatten är den rekommenderade vätskan vid en temperatur mellan +8°C och +80°C. Under +8°C måste en vätska som inte fryser användas. En blandning av vanligt vatten och etylenglykol (laboratorie kvalitet) föreslås.

Användning
Innan maskinen startas, kontrollera alla elektriska och alla rör anslutningar. Se till att cirkulations systemen har fyllts med vätska.

Var säker på att byggnads vattnet är påsatt.

På alla modeller från HX-200 till HX-750 måste maskinen vara kopplad till energikällan minst 12 timmar innan användning så att oljan tillåts att värmas upp och separera från köldmedlet.

Sätt start knappen på ON för att starta maskinen. COOL och IDLE på framsidan visar statusen på kylningssystemet. Cool lyser när värme tas bort från köldmedlet. Heat är på när “the hot gas bypass mode” används. När temperaturen närmar sig den förbestämda önskade temperaturen kommer de två att växla.

Vänta 5 minuter innan maskinen sätts på igen efter att ha varit avstängd för att låta kylningstrycken att utjämnas. Ingen kylning kommer att utföras om inte trycken tillåts att utjämnas.

Temperatur Ändring
Håll Display knappen intryckt för att visa den önskade temperaturen. Håll Display knappen intryckt och vrid Adjust knappen för att ändra den önskade temperaturen. Släpp Display knappen efter att den önskade temperaturen visas på kontroll panelen. Temperaturen på vätskan i tanken visas nu på kontroll panelen.

Flödeskontroll
“RECIRCULATING FLOW CONTROL” handtaget kontrollerar flödet till din anordning. i “+” positionen får man fullt flöde, “-” positionen innebär inget flöde.

Periodiskt Underhåll
Inspektera vätskan i tanken periodiskt. Om rengöring är nödvändigt, spola tanken med en rengörings vätska som är förenlig med cirkulationssystemet och kylvätskan.

Kylvätskan bör bytas periodvis. När enheten används vid låga temperaturer kommer vätskans koncentration av vatten att öka vilket leder till en minskad kylningskapacitet.

Periodisk rengöring av kondensorn är nödvändig. Hur ofta rengöring är nödvändig beror på miljön. Vi rekommenderar en visuell inspektion av kondensorn varje månad efter installation. Efter flera månader kan det avgöras hur ofta kondensorn måste rengöras i framtiden.

Maskiner med PD och TU pumpar har ett filter. Filtret måste rengöras efter en veckas användning. Efter första rengöringen bör filtret inspekteras varje månad. Efter flera månader kan det avgöras hur ofta filtret måsta rengöras.

Drag ur kontakten och töm tanken innan filtret rengörs.

NOTICE D'UTILISATION

HX 540

INSTALLATION

Installer l'appareil dans un environnement propre avec un accès facile à une arrivée d'eau. Cette source d'eau doit correspondre à ce qui est spécifié dans la notice pour ne pas altérer les performances de l'équipement. Une source non conforme pourrait causer une surchauffe du compresseur et un arrêt de l'appareil.
S'assurer que la tension électrique soit celle requise à ±10 %.
Les connections sont situées à l'arrière et référencées :

" Facility water inlet "
" Facility water outlet "
" Recirculating fluid inlet "
" Recirculating fluid outlet "

Retirer les embouts plastique. Connecter le " Facility water inlet " vers l'arrivée d'eau ; le " Facility water outlet " au robinet; le connecteur " Recirculating fluid inlet " à la sortie de votre application et le " Recirculating fluid outlet " à l'entrée.
Utiliser un fluide antigel dont la viscosité doit être inférieure à 50 centistokes à la température la plus basse.
Pour remplir le réservoir, ouvrir la tape en haut à gauche et retirer le couvercle en dévissant.
Remplir jusqu'à 2 " pouces " du sommet (niveau).
Si le volume total à refroidir est important, il convient d'avoir une réserve de fluide immédiatement disponible sous la main pour ne pas désamorcer la pompe.

MISE EN ROUTE

S'assurer au préalable que les écrous de montage sont desserrés et que l'alimentation en eau est connectée. Vérifier les connections électriques, ainsi que le remplissage des tuyaux de circulation.
Connecter l'appareil à la source électrique 12 heures avant utilisation pour chauffer et séparer l'huile du réfrigérant.
Mettre en route en appuyant sur ON. Les diodes " Cool " et " Idle " renseignent sur le mode de fonctionnement. " Cool " est allumé quand le refroidisseur extrait de la chaleur au fluide; " Heat " est allumé quand il est en mode " By-Pass " gaz chaud. Lorsque la température souhaitée est atteinte, la diode s'éteint et s'allume.
Après avoir éteint l'appareil, attendre environ 5 minutes avant de le rallumer, pour un bon équilibrage des pressions, autrement, le cycle serait trop bref et le refroidissement n'aurait pas lieu.
Pour afficher la température souhaitée, maintenir appuyé l'interrupteur et tourner le bouton de réglage jusqu'à ce que la température souhaitée soit affichée. Relâcher ensuite l'interrupteur.
L'affichage indique alors la température du fluide dans le réservoir.
Votre refroidisseur est peut-être équipé avec d'autres types de contrôleurs de température. Veuillez, dans ce cas, vous référer au manuel d'instructions.

CONTROLEUR DE DEBIT

La poignée " Recirculating flow control " règle le débit de recirculation. En position " + ", votre application reçoit un débit maximum; en position " - ", il n'y a plus de débit.

MAINTENANCE PREVENTIVE

·Vérifier régulièrement le niveau du réservoir,
·Changer de temps à autre le liquide utilisé,
·En cas de nettoyage, rincer avec un produit de lavage compatible,
·Aux basses températures, la concentration en eau a tendance à augmenter ce qui peut générer une perte de puissance de refroidissement,
·Avant de changer de liquide, recirculer à une température plus élevée pour réchauffer le serpentin,
·Nettoyer régulièrement selon les conditions de travail la grille d'aspiration. Nous recommandons d'effectuer la première inspection du condenseur un mois après l'installation,
·Les modèles fonctionnent avec une pompe équipée d'un filtre qui retient les impuretés. Il est recommandé de nettoyer ce filtre après la première semaine et, ensuite, une fois par mois. Ce nettoyage s'effectue après avoir débranché l'appareil et vidangé le réservoir

PROCEDIMIENTOS DE OPERACION DE REFERENCIA RAPIDA PARA EL HX-540

INSTALACION

Sitúe la unidad en un entorno limpio con fácil acceso a la instalación de agua de enfriamiento y un desagüe. Los requerimientos de la instalación de agua deben adaptarse a las especificadas en el manual de instrucciones o el funcionamiento de la unidad se verá mermado. Un suministro de agua inadecuado podría causar que el compresor se sobrecalentara y se apagara la unidad.

Asegúrese de que el voltaje de la fuente de energía sea igual que el voltaje especificado, ±10%.

Las conexiones de tuberías están situadas en la parte trasera de la unidad y están marcadas como FACILITY WATER INLET y OUTLET. Saque los protectores de plástico de todas las conexiones de tuberías. Conecte el adaptador FACILITY WATER INLET a la instalación de agua de enfriamiento y el adaptador FACILITY WATER OUTLET a un desagüe.
Conecte el adaptador RECIRCULATING FLUID INLET a la salida de su aplicación y el adaptador RECIRCULATING FLUID OULET a la entrada de su aplicación.

Se necesita un fluido no congelante para operación a cualquier temperatura de ambiente o de recirculación. El fluido seleccionado debe tener una viscosidad de 50 centistokes o menos a la temperatura de funcionamiento más baja.

Para llenar el reservorio, abra el panel de acceso al reservorio por la esquina trasera izquierda y saque la tapa del reservorio desatornillando los tornillos. Llene el reservorio hasta dos pulgadas del tope cuando la unidad esté a la temperatura de funcionamiento deseada. Si la capacidad de fluido de sus lineas de aplicación y recirculación son significativas, tenga fluido extra a mano.

OPERACION

Antes de poner en marcha la unidad, asegúrese de que las tuercas de montaje del compresor se han aflojado y que la instalación del agua está conectada. Compruebe todas las conexiones eléctricas y de tuberías. Asegúrese de que el sistema circulador se ha llenado con fluido de enfriamiento.

La unidad debe conectarse a la red de energía durante al menos 12 horas para permitir que el aceite se caliente y se separe del refrigerante.

Para poner en marcha la unidad, ponga el interruptor de encendido en posición ON. Los LED Cool y Idle del panel frontal indican la situación del sistema de refrigeración. Cool está en marcha cuando la unidad está eliminando calor del fluido de enfriamiento. Heat está en marcha cuando la unidad está en el modo by-pass gas caliente. A medida que la temperatura de funcionamiento se aproxima al punto fijado, el LED ciclará.

Cuando se apaga la unidad, espere aproximadamente cinco minutos antes de volver a ponerla en marcha para dar tiempo para que las presiones de refrigeración se ecualicen. Si no se permite ecualizarse las presiones, el compresor se cortocicuitará y no enfriará.

Para que el punto de ajuste de temperatura aparezca en pantalla, mantenga presionado el interruptor Setpoint/Actual Temp. Para fijar el punto de ajuste de temperatura, mantenga presionado el interruptor Setpoint/Actual Temp y gire el botón ADJUST hasta que la pantalla digital indique el punto de ajuste de temperatura deseado. Una vez fijado el punto de ajuste, suelte el interruptor Setpoint/Actual Temp. La pantalla indicará la temperatura del fluido en el reservorio.

La unidad puede equiparse con uno de los varios controladores opcionales. En este caso, refiérase al manual de instrucciones para ver más detalles de su operación.

CONTROL DE FLUJO
El mango RECIRCULATING FLOW CONTROL controla la escala de flujo a su aplicación. En la posición + recibirá flujo completo, en la posición - no hay flujo.

MANTENIMIENTO PERIODICO
Inspeccione periódicamente el fluido del reservorio. Si es necesaria una limpieza, rocíe el reservorio con un fluido de limpieza compatible con el sistema de circulación y el fluido refrigerante.

El fluido refrigerante debe sustituirse periódicamente. Cuando se funciona a baja temperatura, la concentración de agua en el fluido refrigerante aumentará con el tiempo, ocasionando una pérdida de capacidad refrigerante.

Es necesario un vaciado periódico de las aletas del condensador. La frecuencia de limpieza depende del entorno en que funciona el aparato. Recomendamos una inspección visual mensual del condensador después de la instalación inicial. Después de varios meses, quedará establecida la frecuencia de limpieza.

La unidad tiene un filtro. Si hay residuos en el sistema, el filtro prevendrá que el material entre en la bomba y dañe las paletas de la bomba.

Después de la instalación inicial, el filtro puede bloquearse. El filtro debe limpiarse después de la primera semana de la instalación. Después de esta primera limpieza, se recomienda una inspección visual mensual. Después de varios meses, se establecerá la frecuencia de limpieza.

Antes de limpiar el filtro, desenchufe el aparato y vacíe el reservorio.

WARRANTY

NESLAB Instruments, Inc. warrants for 12 months from date of shipment any NESLAB unit according to the following terms.

Any part of the unit manufactured or supplied by NESLAB and found in the reasonable judgment of NESLAB to be defective in material or workmanship will be repaired at an authorized NESLAB Repair Depot without charge for parts or labor. The unit, including any defective part must be returned to an authorized NESLAB Repair Depot within the warranty period. The expense of returning the unit to the authorized NESLAB Repair Depot for warranty service will be paid for by the buyer. NESLAB's responsibility in respect to warranty claims is limited to performing the required repairs or replacements, and no claim of breach of warranty shall be cause for cancellation or recision of the contract of sales of any unit.

With respect to units that qualify for field service repairs, NESLAB's responsibility is limited to the component parts necessary for the repair and the labor that is required on site to perform the repair. Any travel labor or mileage charges are the financial responsibility of the buyer.

The buyer shall be responsible for any evaluation or warranty service call (including labor charges) if no defects are found with the NESLAB product.

This warranty does not cover any unit that has been subject to misuse, neglect, or accident. This warranty does not apply to any damage to the unit that is the result of improper installation or maintenance, or to any unit that has been operated or maintained in any way contrary to the operating or maintenance instructions specified in NESLAB's Instruction and Operation Manual. This warranty does not cover any unit that has been altered or modified so as to change its intended use.

In addition, this warranty does not extend to repairs made by the use of parts, accessories, or fluids which are either incompatible with the unit or adversely affect its operation, performance, or durability.

NESLAB reserves the right to change or improve the design of any unit without assuming any obligation to modify any unit previously manufactured.

THE FOREGOING EXPRESS WARRANTY IS IN LIEU OF ALL OTHER WARRANTIES, EXPRESSED OR IMPLIED, INCLUDING BUT NOT LIMITED TO WARRANTIES OR MERCHANTABILITY AND FITNESS FOR A PARTICULAR PURPOSE.

NESLAB'S OBLIGATION UNDER THIS WARRANTY IS STRICTLY AND EXCLUSIVELY LIMITED TO THE REPAIR OR REPLACEMENT OF DEFECTIVE COMPONENT PARTS AND NESLAB DOES NOT ASSUME OR AUTHORIZE ANYONE TO ASSUME FOR IT ANY OTHER OBLIGATION.

NESLAB ASSUMES NO RESPONSIBILITY FOR INCIDENTAL, CONSEQUENTIAL, OR OTHER DAMAGES INCLUDING, BUT NOT LIMITED TO LOSS OR DAMAGE TO PROPERTY, LOSS OF PROFITS OR REVENUE, LOSS OF THE UNIT, LOSS OF TIME, OR INCONVENIENCE.

This warranty applies to units sold in the United States. Any units sold elsewhere are warranted by the affiliated marketing company of NESLAB Instruments, Inc. This warranty and all matters arising pursuant to it shall be governed by the law of the State of New Hampshire, United States. All legal actions brought in relation hereto shall be filed in the appropriate state or federal courts in New Hampshire, unless waived by NESLAB.

HX Digital
Recirculating Chiller

NESLAB Manual P/N 002002
Rev. 08/20/97

Installation, Operation, and Maintenance Manual



NESLAB online

Product Service Information, Electronic Catalog,
Applications Notes, MSDS Forms, e-mail.

(603)427-2490

Set modem to 8-N-1 protocol, 1200 - 14400 baud

Voice Info: (800) 4-NESLAB

Comments on this manual can be sent to:

NESLAB@lifesciences.com

or visit our Web page at:

http://www.neslabinc.com

HX Analog/Digital Recirculating Chiller Installation, Operation, and Maintenance Manual

Table of Contents

PREFACE

Compliance 5
Unpacking 5
Warranty 5
After-sale Support 5

SECTION I Safety

Warnings 6

SECTION II General Information

Description 7
Specifications 8
Cooling Capacity 9
Pump Capacity 10

SECTION III Installation

Site (Air-cooled Units) 12
Site (Water-cooled Units) 14
Electrical Requirements 16
Plumbing Requirements 17
Fluids 19
Water Quality Recommendations 20
Filling Requirements 21

SECTION IV Temperature Controllers

Temperature Controllers 22
Refrigeration Control 22
Start Up 22
Digital (Panel mounted) 23
Digital (Remote) 24
Digital with Interlock 25

SECTION V Operation

Flow Control 28
Pressure Gauge 29
Pressure Relief Valve (PD and TU Pumps Only) 29
High Pressure Cutout (Water-Cooled Units Only) 29

SECTION VI
Special Features

Pump Motor Overload Protector 30
Heater Package (Optional) 31
Remote Condenser (Optional) 33
Nitrogen Purge (Optional) 33
Particulate Filter (Optional) 33
15 Pin Accessory Connector (Optional) 34
External Pressure Regulator (Optional) 35
Automatic Refill Device (Optional) 36

SECTION VII
Maintenance

Service Contracts 37
Condenser Cleaning 37
Hoses 37
Algae 37

SECTION VIII
Service

Configuration 38
Reservoir Cleaning 39
Pump Strainer (PD and TU Pumps Only) 40
Flow Filter Strainer 41
Phase Rotation 41
Pump Lubrication 42
Suction Discharge Pressure and Speed Check 43

SECTION IX
Troubleshooting

Checklist 44
Service Assistance 44

SECTION X
Diagrams

Refrigeration Flow (HX-75 through HX-150) 45
Refrigeration Flow (HX-200 through HX-750) 45
Pump Flow (CP Pumps) 46
Pump Flow (PD and TU Pumps) 46
Dimensions 47

APPENDIX A - INTERNATIONAL QUICK REFERENCE GUIDES
APPENDIX B - 380V WYE MODIFICATION

WARRANTY

Water-Cooled HX Series Quick Reference Operating Procedures

Installation
Position the unit in a clean environment with easy access to facility cooling water and a drain. The facility water requirements must meet those specified in the instruction or unit performance will be derated.

Ensure the voltage of the power source meets the specified voltage, ±10%.

The plumbing connections are located on the rear of the unit and are labelled TAP WATER, DRAIN, SUPPLY and RETURN. Remove the plastic protective plugs from all the plumbing connections. Connect the TAP WATER fitting to the facility cooling water and the DRAIN fitting to a drain. Connect the SUPPLY fitting to the inlet of your application and the RETURN fitting to the outlet of your application.

To fill the reservoir open the access panel on the left rear corner of the case top and remove the reservoir cover by unscrewing the thumbscrews. Fill the reservoir to within one inch of the top. If the fluid capacity of your application and recirculation lines are significant, have extra fluid on hand.

Tap water is the recommended fluid for operation from +8°C to +80°C. Below +8°C, a non-freezing fluid must be used. A mixture of tap water and laboratory grade ethylene glycol is suggested.

Operation
Before starting the unit, double check all electrical and plumbing connections. Make sure the circulating system has been filled with cooling fluid.

Ensure the facility water is turned on.

On models HX-200 through HX-750, the unit must be connected to the power source for at least 12 hours to allow the oil to be heated and separated from the refrigerant

To start the unit, place the Power Switch to the ON position. The Cool and Idle LEDs on the front panel indicate the status of the refrigeration system. Cool is on when the unit is removing heat from the cooling fluid, Heat is on when the unit is in the hot gas by-pass mode. As the operating temperature approaches the setpoint, the LEDs cycle.

When the unit is shut off, wait five minutes before restarting to allow time for the refrigeration pressures to equalize. If the pressures are not allowed to equalize, the compressor will short-cycle and no cooling will occur.

Analog Controller Temperature Adjustment
To adjust the temperature setpoint, turn the °C dial on the front of the unit to the desired temperature.

Digital Controller Temperature Adjustment
To display the temperature setpoint, press and hold the DISPLAY switch. To adjust the temperature setpoint, press and hold the DISPLAY switch and turn the ADJUST knob until the desired temperature setpoint is indicated on the digital display. Once the setpoint is adjusted, release the DISPLAY switch. The display will now indicate the temperature of the fluid in the reservoir.

Flow Control
The RECIRCULATING FLOW CONTROL handle controls the flow rate to your application. In the “+” position you receive full flow, the “-” position is no flow.

Periodic Maintenance
Periodically inspect the reservoir fluid. If cleaning is necessary, flush the reservoir with a cleaning fluid compatible with the circulating system and the cooling fluid.

The cooling fluid should be replaced periodically. When operating at low temperatures, the concentration of water in the cooling fluid will increase over time, leading to a loss of cooling capacity.

Periodic vacuuming of the condenser fins is necessary. The frequency of cleaning depends on the operating environment. We recommend avisual inspection of the condenser be made monthly after initial installation. After several months, the cleaning frequency will be established.

Units with PD and TU pumps have a strainer. If debris is in the system, the strainer will prevent the material from being drawn into the pump and damaging the pump vanes.

After initial installation, the strainer may become clogged. The strainer must be cleaned after the first week of installation. After this first cleaning, a monthly visual inspection is recommended. After several months, the frequency of cleaning will be established.

Before cleaning the strainer, disconnect the power cord from the power source and drain the reservoir.

For complete information, including troubleshooting procedures, please refer to the instruction manual.

Air-Cooled HX Series Quick Reference Operating Procedures

Installation
Position the unit so the intake and discharge are not impeded. Inadequate ventilation will cause a reduction in cooling capacity and, in extreme cases, compressor failure.

Avoid excessively dusty areas and institute a periodic cleaning schedule. For proper operation, the unit needs to pull substantial amounts of air through a condenser. A build up of dust or debris on the fins of the condenser will lead to a loss of cooling capacity.

The unit will retain its full rated capacity in ambient temperatures up to approximately +24°C.

Ensure the voltage of the power source meets the specified voltage, ±10%.

The plumbing connections are located on the rear of the unit and are labelled SUPPLY and RETURN. These connections are ¾ inch FPT. Remove the plastic protective plugs from both plumbing connections. Connect the SUPPLY fitting to the inlet of your application. Connect the RETURN fitting to the outlet of your application.

To fill the reservoir open the access panel on the left rear corner of the case top and remove the reservoir cover by unscrewing the thumbscrews. Fill the reservoir to within one inch of the top. If the fluid capacity of your application and recirculation lines are significant, have extra fluid on hand.

Tap water is the recommended fluid for operation from +8°C to +80°C. Below +8°C, a non-freezing fluid must be used. A mixture of tap water and laboratory grade ethylene glycol is suggested.

Operation
Before starting the unit, double check all electrical and plumbing connections. Make sure the circulating system has been filled with cooling fluid.

On models HX-200 through HX-750, the unit must be connected to the power source for at least 12 hours to allow the oil to be heated and separated from the refrigerant

To start the unit, place the Power Switch to the ON position. The Cool and Idle LEDs on the front panel indicate the status of the refrigeration system. Cool is on when the unit is removing heat from the cooling fluid, Heat is on when the unit is in the hot gas by-pass mode. As the operating temperature approaches the setpoint, the LEDs cycle.

When the unit is shut off, wait five minutes before restarting to allow time for the refrigeration pressures to equalize. If the pressures are not allowed to equalize, the compressor will short-cycle and no cooling will occur.

Analog Controller Temperature Adjustment
To adjust the temperature setpoint, turn the °C dial on the front of the unit to the desired temperature.

Digital Controller Temperature Adjustment
To display the temperature setpoint, press and hold the DISPLAY switch. To adjust the temperature setpoint, press and hold the DISPLAY switch and turn the ADJUST knob until the desired temperature setpoint is indicated on the digital display. Once the setpoint is adjusted, release the DISPLAY switch. The display will now indicate the temperature of the fluid in the reservoir.

Flow Control
The RECIRCULATING FLOW CONTROL handle controls the flow rate to your application. In the “+” position you receive full flow, the “-” position is no flow.

Periodic Maintenance
Periodically inspect the reservoir fluid. If cleaning is necessary, flush the reservoir with a cleaning fluid compatible with the circulating system and the cooling fluid.

The cooling fluid should be replaced periodically. When operating at low temperatures, the concentration of water in the cooling fluid will increase over time, leading to a loss of cooling capacity.

Periodic vacuuming of the condenser fins is necessary. The frequency of cleaning depends on the operating environment. We recommend a visual inspection of the condenser be made monthly after initial installation. After several months, the cleaning frequency will be established.

Units with PD and TU pumps have a strainer. If debris is in the system, the strainer will prevent the material from being drawn into the pump and damaging the pump vanes.

After initial installation, the strainer may become clogged. The strainer must be cleaned after the first week of installation. After this first cleaning, a monthly visual inspection is recommended. After several months, the frequency of cleaning will be established.

Before cleaning the strainer, disconnect the power cord from the power source and drain the reservoir.

For complete information, including troubleshooting procedures, please refer to the instruction manual.

Preface

Compliance

Products tested and found to be in compliance with the requirements defined in the EMC standards defined by 89/336/EEC as well as Low Voltage Directive (LVD) 73/23/EEC can be identified by the CE label on the rear of the unit. The testing has demonstrated compliance with the following directives:

LVD, 73/23/EEC	Complies with UL 3101-1:93
EMC, 89/336/EEC	EN 55011, Class A Verification
	EN 50082-1:1992
	IEC 1000-4-2:1995
	IEC 1000-4-3:1994
	IEC 1000-4-4:1995

For any additional information refer to the Letter of Compliance that shipped with the unit (Declaration of Conformity).

Unpacking

Retain all cartons and packing material until the unit is operated and found to be in good condition.

On units with a remote control box, the box is packed in a separate carton. Be sure to locate this separate carton; do not dispose of it by mistake.

If the unit shows external or internal damage, or does not operate properly, contact the transportation company and file a damage claim. Under ICC regulations, this is your responsibility.

Warranty

The unit has a warranty against defective parts and workmanship for one full year from date of shipment. Refer to the last page of this manual for complete warranty details.

After-sale Support

NESLAB is committed to customer service both during and after the sale. If you have questions concerning the operation of your unit or the information in this manual, contact our Sales Department. If your unit fails to operate properly or if you have questions concerning spare parts or Service Contracts, contact our Service Department.

Before calling, please refer to the serial number label on the rear of the case top to obtain the following information (see Section II, Description for the serial number label location):

- BOM number _____

- Serial number _____

Section I Safety

Warnings

Make sure you read and understand all instructions and safety precautions listed in this manual before installing or operating your unit. If you have any questions concerning the operation of your unit or the information in this manual, contact our Sales Department for assistance (see Preface, After-sale Support).

Performance of installation, operation, or maintenance procedures other than those described in this manual may result in a hazardous situation and may void the manufacturer's warranty.

Transport the unit with care. Sudden jolts or drops can damage the refrigeration lines.

Do not attempt to defeat any of the interlock switches or safety features built into the unit.

Observe all warning labels.

Never remove warning label.

Never operate damaged or leaking equipment.

Never operate the unit without cooling fluid in the fluid reservoir.

Make sure the unit is off before connecting or disconnecting the power cord or other cables.

Always turn off the unit and disconnect the power cord from the power source before performing any service or maintenance procedures, or before moving the unit.

Always empty the fluid reservoir before moving the unit.

Never operate equipment with damaged power cords.

Refer service and repairs to a qualified NESLAB technician.



In addition to the safety warnings listed above, warnings are posted throughout the manual. These warnings are designated by an exclamation mark inside an equilateral triangle with text highlighted in bold. Read and follow these important instructions. Failure to observe these instructions can result in permanent damage to the unit, significant property damage, or personal injury or death.

Section II General Information

Description

The HX Series Recirculating Chiller is designed to provide a continuous flow of cooling fluid at a constant temperature and volume.

The unit consists of an air-cooled or water-cooled refrigeration system, a fluid reservoir, a fluid recirculation pump, and a temperature controller.

HX units are available with a large number of options. This manual explains how to install, operate, and maintain a “standard” HX unit. This manual also explains some of the available options. Supplemental manuals are supplied with units equipped with options not covered in this manual.

Throughout the manual, you will be asked to consult the unit’s serial number label, or the pump identification label, or both, for specific information. The labels are located on the rear of the case top.

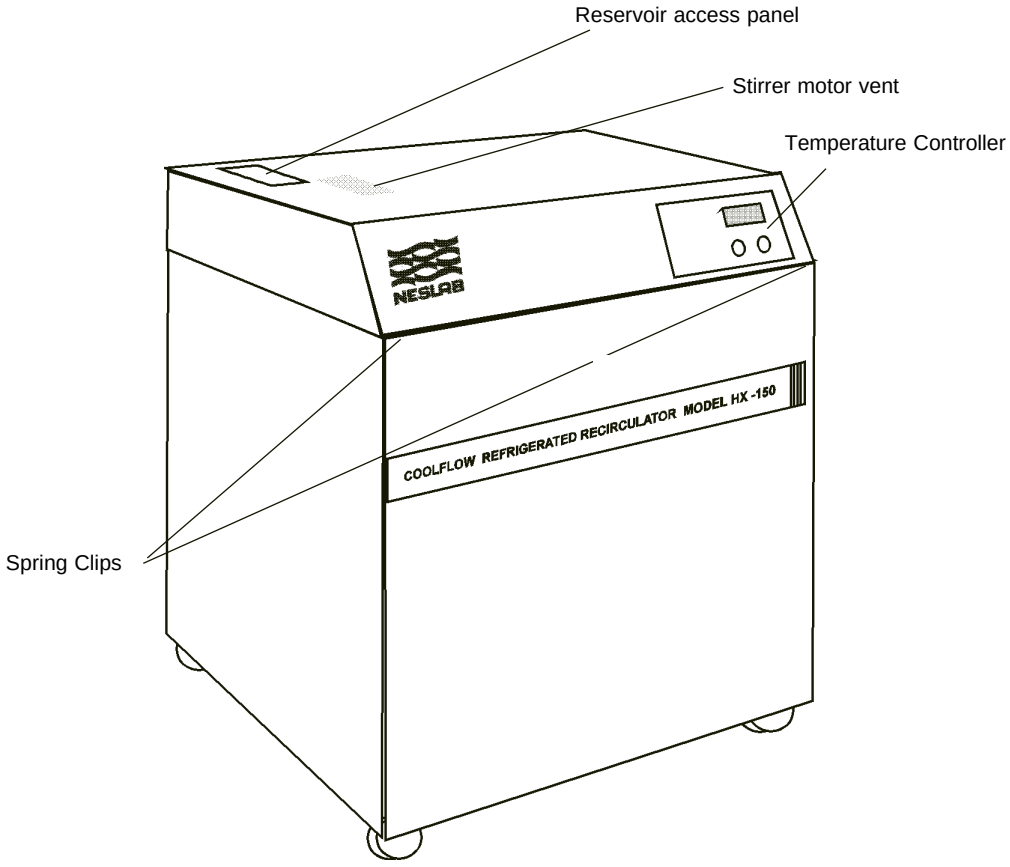

Specifications

	HX-75	HX-100	HX-150
Temperature Range	+5°C to +35°C		
Temperature Stability	±0.1°C		
Unit Dimensions[1] (H x W x D) *Inches* *Centimeters*	35 ¾ x 23 ¼ x 18 ¾ 90.8 x 59.0 x 47.6	39 5/8 x 26 ¼ x 21 1/8 100.6 x 66.6 x 53.6	
Reservoir Volume *Gallons* *Liters*	5.0 19.0	8.0 30.3	
Shipping Weight *Pounds* *Kilograms*	261 118	300 136	320 145

	HX-200	HX-300	HX-500	HX-750
Temperature Range	+5°C to +35°C			
Temperature Stability	±0.1°C			
Unit Dimensions[1,2] (H x W x D) *Inches* *Centimeters*	45 7/8 x 33 ¾ x 25 ¼ 116.5 x 85.7 x 64.1		50 5/8 x 46 x 28 ¾ 128.3 x 116.8 x 73.0	63 ¾ x 46 x 29 162.0 x 116.8 x 73.6
Reservoir Volume *Gallons* *Liters*	15.0 56.8		28.0 106.0	40.0 151.0
Shipping Weight *Pounds* *Kilograms*	471 214	531 241	746 338	971 440

1. For additional dimensions see page 47.
2. HX-750 with a water-cooled refrigeration system has the same dimensions as the HX-500.

Cooling Capacity

Cooling capacity will vary depending on fluid temperature, ambient temperature, and cooling fluid.

Cooling capacities for models HX-75 through HX-750 were obtained under the following conditions:

1. *air-cooled unit operating at +20°C (+68°F) ambient temperature.*
2. *cooling fluid with specific heat of 1.0 was used for fluid temperatures from +5°C to +35°C.*

HX-75, 100, & 150

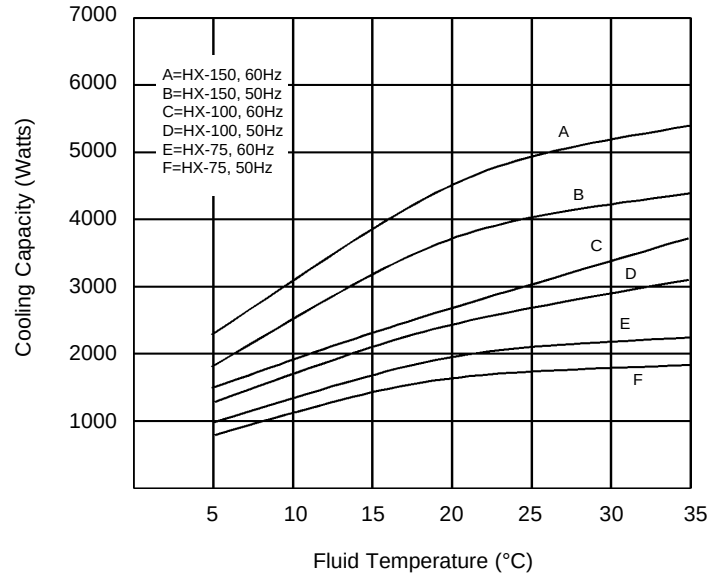

HX-200 & 300

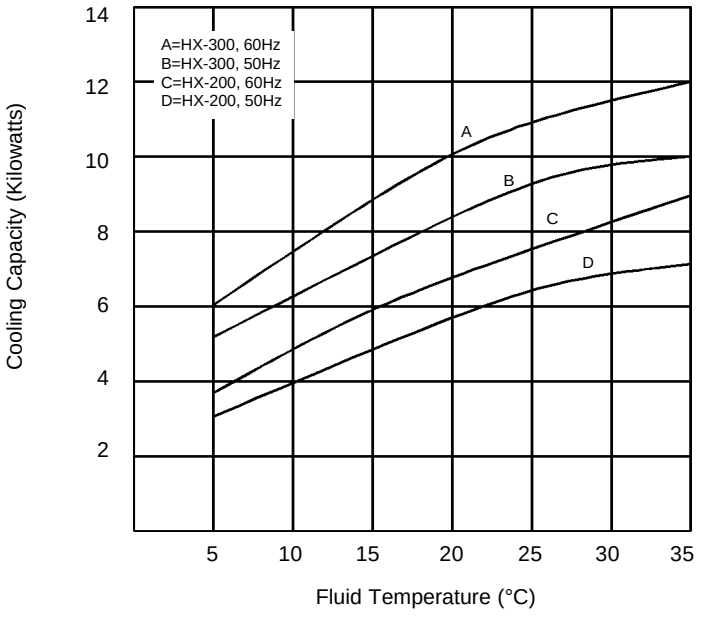

HX-500 & 750

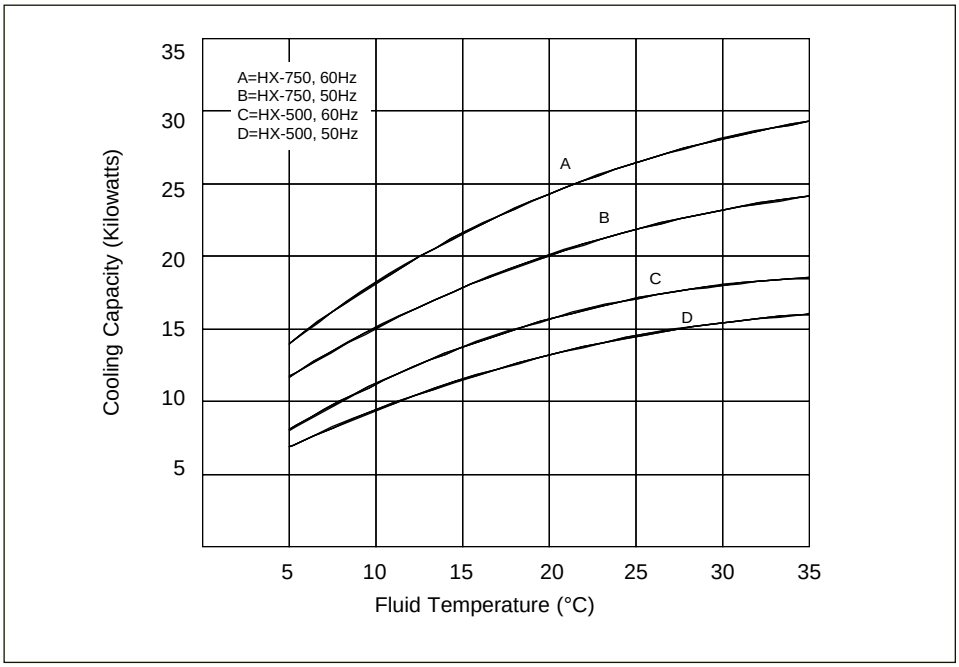

Pump Capacity

HX units are available with one of three standard pump types: positive displacement (PD), centrifugal (CP), and turbine (TU). Refer to the pump identification label on the rear of the case top or rear of analog temperature controller to identify the specific pump in your unit.

PD2 & TU1

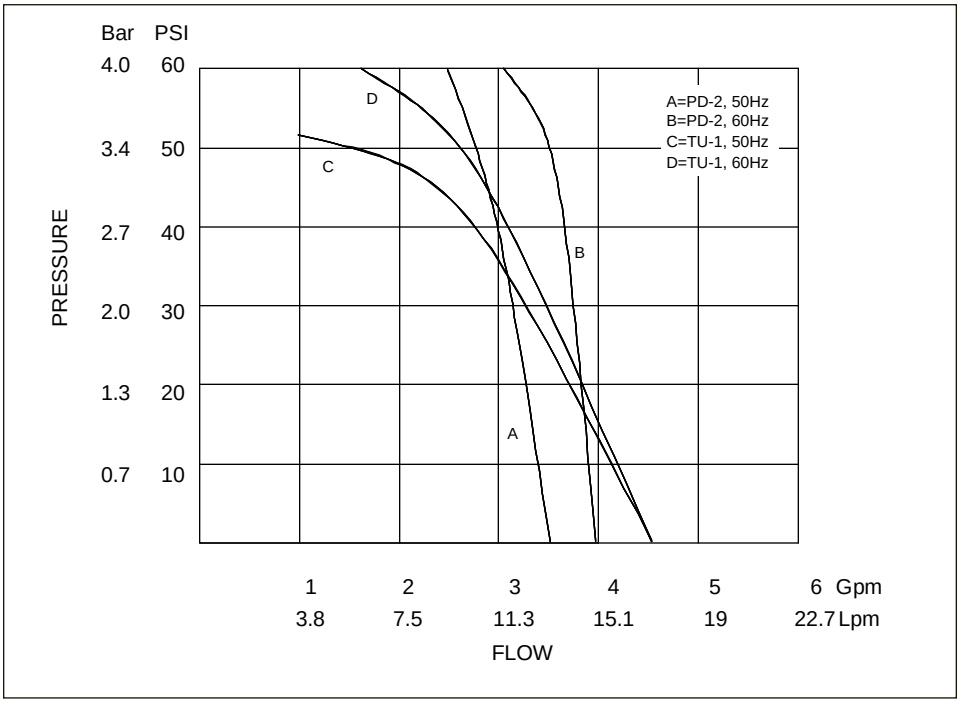

CP

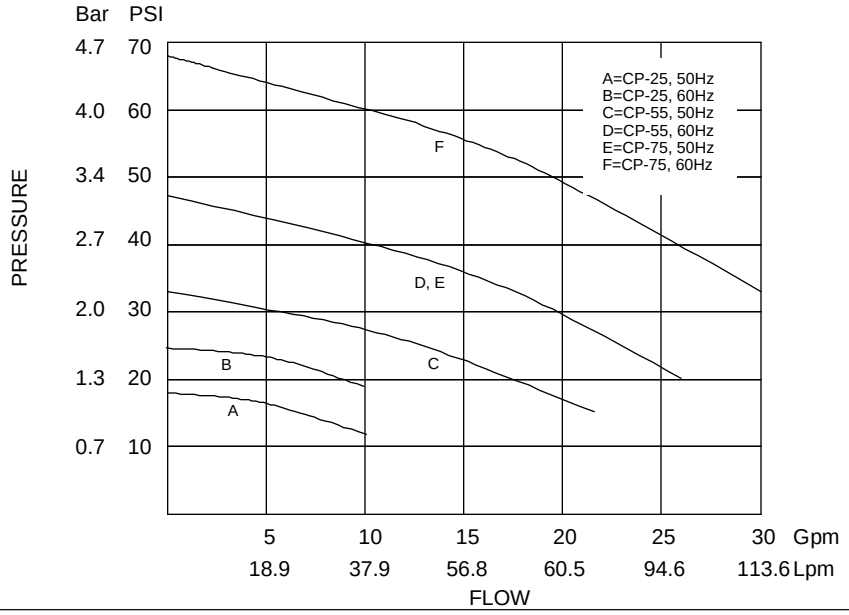

TU-3, 5 & 6

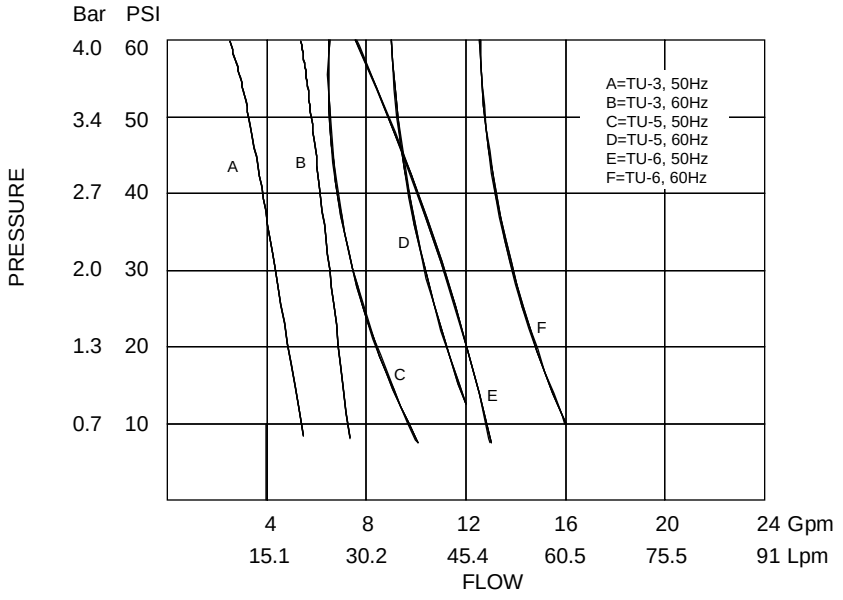

TU-7, 8 & 9

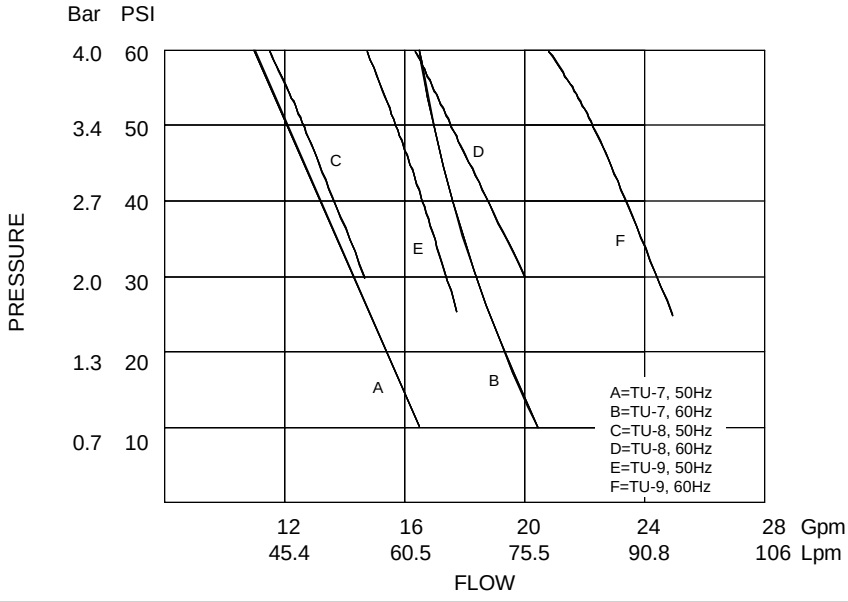

Section III Installation

Site (Air-cooled Units)

The unit should be located in a laboratory or clean industrial environment where ambient temperatures are inside the range of +55°F to +95°F (+13°C to +35°C).

The unit will retain its full rated capacity in ambient temperatures to approximately +75°F (+24°C). Above +75°F, derate the cooling capacity 1% for every 1°F above +75°F, to a maximum ambient temperature of +95°F. In degrees Celsius, derate the cooling capacity 1% for every 0.5°C above +24°C, to a maximum ambient temperature of +35°C.



Never place the unit in a location where excessive heat, moisture, or corrosive materials are present.

The unit has an air-cooled refrigeration system. It must be positioned so the air intake and discharge are not impeded.

On models HX-75 through HX-150, air is drawn through the left side of the unit and discharged through the right and rear. A minimum clearance of 2 feet (0.6 meter) on these three sides is necessary for adequate ventilation.

On models HX-200 — HX-750, air is drawn through the front of the unit and discharged through the side and rear. A minimum of 5 feet (1.5 meters) on all four sides of the unit is necessary for adequate ventilation.

In some applications where space is at a premium, the minimum ventilation clearance can be compromised. However, consult our Sales Department before positioning the unit in a location with less minimum clearance than listed above. Inadequate ventilation will cause a reduction in cooling capacity and, in extreme cases, compressor failure.

Excessively dusty areas should be avoided and a periodic cleaning schedule should be instituted (see Section VII, Condenser Cleaning).

On digital models HX-100 through HX-750 the stirrer motor is located under the case top. (Models HX-500 and HX-750 have two stirrer motors.) Heat generated by the stirrer motor is discharged through vents in the case top. Do not block the vents. A minimum clearance of 2 inches (5 centimeters) is necessary for adequate ventilation.

NOTE: Units with plate heat exchangers do not have stirrer motors.

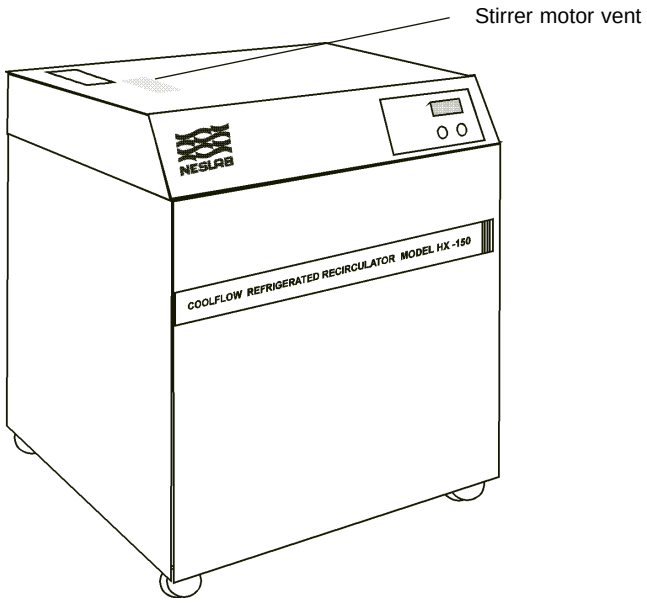

Refer to the table below to determine the approximate amount of air intake required for the unit to retain its full rated capacity. If the air intake does not meet these standards, cooling capacity will be derated.

	HX-75	HX-100	HX-150	HX-200
Air Intake				
Cubic feet per minute	600	710	1050	2000
Liters per minute	17000	20100	29730	56640

	HX-300	HX-500	HX-750
Air Intake			
Cubic feet per minute	1900	5000	5600
Liters per minute	53800	141750	158800

Site (Water-cooled units)

The unit should be located in a laboratory or clean industrial environment with easy access to a facility cooling water supply and a drain.

All units are equipped with castors for easy movement. This allows the unit to be placed in a small area, as long as there is ample space for the unit to be moved for access on all four sides. A minimum access clearance of 3 feet (1 meter) on two adjacent sides is recommended.

The facility cooling water supply must meet or exceed the requirements listed in the table shown on the next page for the unit to operate at its full rated capacity. If the facility cooling water does not meet these standards, the cooling capacity will be derated.

As the temperature of the cooling water supply increases, the required flow rate and pressure of the cooling water supply increases.

For example, with a model HX-150, if the temperature of the cooling water supply is +65°F, the flow rate must be at least 1.5 gallons per minute, with a pressure differential of at least 3.5 PSI. However, if the temperature of the cooling water supply is +85°F, the flow rate must be at least 4.0 gallons per minute, with a pressure differential of at least 10 PSI.

If the unit is being used with a building water supply, the back pressure of the drain must be less than the supply pressure.

A water regulating valve, located in the TAP WATER line, regulates the flow rate of the cooling water supply as it enters the unit. The valve regulates the flow rate based on the heat load. Flow through the unit stops automatically when the unit is shut off.

On digital models HX-100 through HX-750 the stirrer motor is located under the case top. (Models HX-500 and HX-750 have two stirrer motors.) Heat generated by the stirrer motor is discharged through vents in the case top. Do not block the vents. A minimum clearance of 2 inches (5 centimeters) is necessary for adequate ventilation. See illustration on previous page.

NOTE: Units with plate heat exchangers do not have stirrer motors.

	Temperature of cooling water supply			
	+55°F (+13°C)	**+65°F (+18°C)**	**+75°F (+24°C)**	**+85°F (+29°C)**
HX-75				
Flow Rate				
Gallons per minute	0.7*	1.0	1.5	3.0
Liters per minute	2.8*	3.7	5.7	11.4
Pressure Drop				
PSI	1.5*	2.0	3.5	8.0
Bar	0.10*	0.13	0.24	0.55
HX-100				
Flow Rate				
Gallons per minute	1.0*	1.5	2.0	3.5
Liters per minute	3.7*	5.7	7.6	13.2
Pressure Drop				
PSI	2.0*	3.5	5.0	10.0
Bar	0.13*	0.24	0.34	0.69
HX-150				
Flow Rate				
Gallons per minute	1.0*	1.5	2.5	4.0
Liters per minute	3.7*	5.7	9.5	15.1
Pressure Drop				
PSI	2.0*	3.5	6.0	10.0
Bar	0.13*	0.24	0.41	0.69
HX-200				
Flow Rate				
Gallons per minute	1.8*	2.5	3.5	6.0
Liters per minute	6.8*	9.5	13.2	22.7
Pressure Drop				
PSI	5.0*	6.0	7.0	18.0
Bar	0.34*	0.41	0.48	1.24
HX-300				
Flow Rate				
Gallons per minute	2.5*	4.0	6.5	11.0
Liters per minute	9.5*	15.1	24.6	41.6
Pressure Drop				
PSI	6.0*	8.0	13.5	25.0
Bar	0.41*	0.55	0.93	1.72
HX-500				
Flow Rate				
Gallons per minute	3.5	5.0	8.0	16.0
Liters per minute	13.2	18.9	30.3	60.6
Pressure Drop				
PSI	13.0	17.0	23.0	57.0
Bar	0.89	1.17	1.58	3.93
HX-750				
Flow Rate				
Gallons per minute	6.0	8.0	12.5	16.6
Liters per minute	22.7	30.3	47.3	62.8
Pressure Drop				
PSI	14.0	20.0	28.5	40.0
Bar	0.96	1.38	1.96	2.76

*Estimated values

Electrical Requirements

Refer to the table below to determine electrical requirements of your unit. Verify the requirements by reviewing the ratings listed on the serial number label on the rear of the case top or rear of analog temperature controller.

	HX-75	HX-100	HX-150
Volts		208/230 220/240	
Hertz		60 50	
Phase		1 1	
Plug		NEMA L6-30P or L6-20P	

	HX-200	HX-300	Hx-500	HX-750
Volts	208/230 200/220 380/420		208/230	380/420
Hertz	60 50 50		60	50
Phase	3 3 3		3	3
Plug	NEMA L15-30P or L16-20P		N/A	

Make sure the voltage of the power source agrees with the unit's voltage and frequency rating. The unit is designed to tolerate deviations of ±10% from the rated line voltage.

Models HX-75 through HX-300 have an 8 foot (2.4 meter) power cord installed on the unit at the time of shipment.

NOTE: Custom units equipped with heaters may not have a power cord. See Section VI, Special Features.

NOTE: 380V WYE connections are shown in Appendix B.

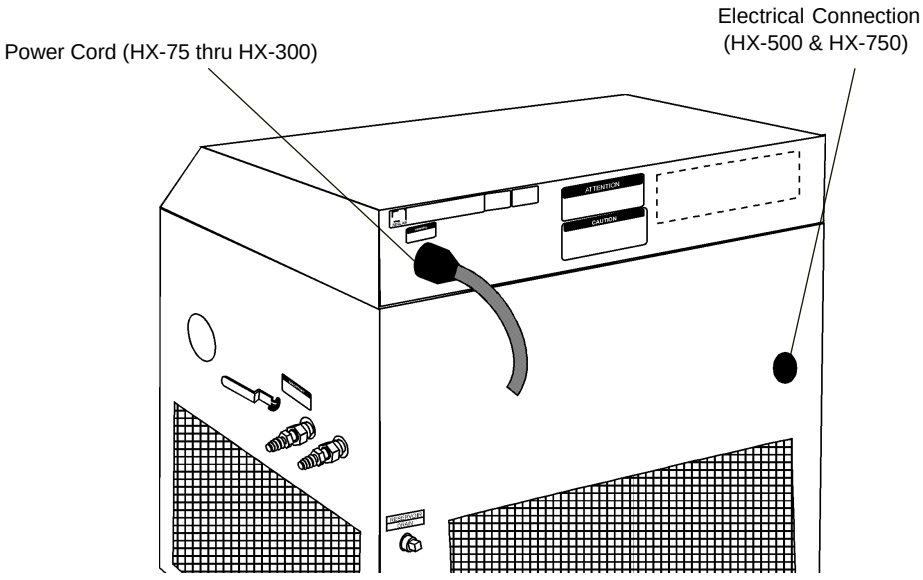



The unit construction provides extra protection against the risk of electric shock by grounding appropriate metal parts. The extra protection may not function unless the power cord is connected to a properly grounded outlet. It is the user's responsibility to assure a proper ground connection is provided.

Models HX-500 and HX-750 are not equipped with a power cable. Installation of the cable is the user's responsibility. Wire the unit in conformance to local, state, and federal electrical codes. Double check all wiring to make sure it is properly connected and protected from the elements.

Models HX-200 through HX-750 are equipped with a compressor crankcase heater. The crankcase heater warms the oil in the compressor and prevents refrigerant from mixing with the oil. Before start up, the unit must be connected to its power source for at least 12 hours. This allows time for the oil to be heated and separate from the refrigerant.

Plumbing Requirements

Air-cooled and water-cooled units

Before installing the unit to an instrument that previously used tap water as a cooling fluid, flush the instrument several times to remove any rust or scale that has built up. Consult the manufacturer of the instrument for a cleaning fluid recommendation.

The plumbing fittings used to connect the HX to the instrument being cooled are located on the right side of the unit (labelled SUPPLY and RETURN). These connections are ¾ inch FPT.

Remove the protective plugs from the SUPPLY and RETURN connections. Connect the SUPPLY fitting to the inlet of the instrument being cooled. Connect the RETURN fitting to the outlet of the instrument being cooled.

The RESERVOIR DRAIN connection on the rear of the unit is a ½ inch FPT fitting connected internally to the unit's fluid reservoir. This fitting provides a means for draining the reservoir. The unit is shipped with a ½ inch MPT plug installed in this fitting. Remove the plug to drain the reservoir.

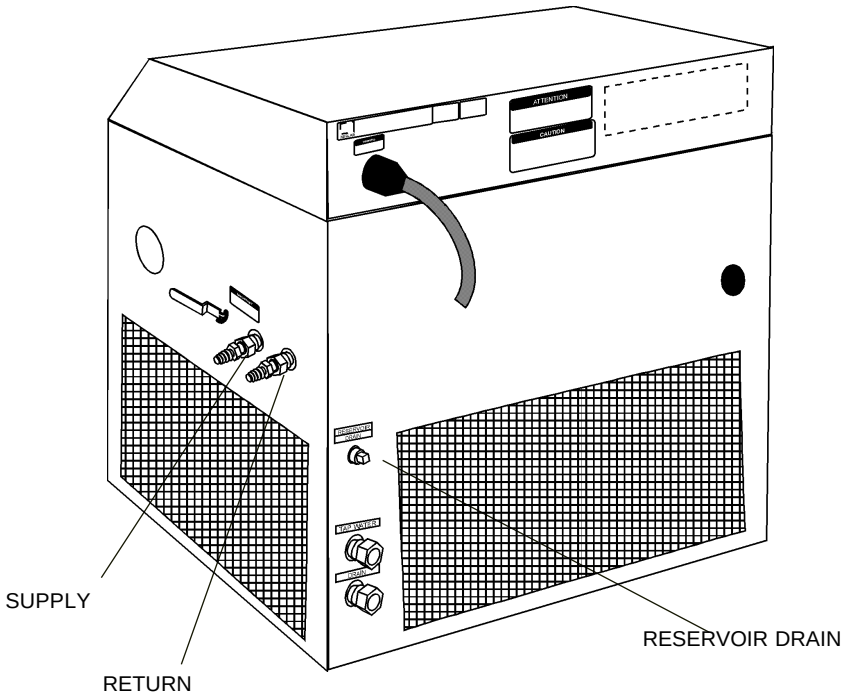

Two plumbing adapters (¾ inch MPT x 5/8 inch hose) are included with the unit. If the unit is being plumbed to the instrument being cooled using flexible tubing, install the adapters in the SUPPLY and RETURN plumbing ports. To prevent leaking, wrap the threads of the adapters with Teflon® sealing tape before installing them in the plumbing ports. The adapters will accept ½ or 5/8 inch ID flexible tubing.

If the unit is "hard plumbed" to the instrument being cooled or to the cooling water supply, damage can occur if the unit is bumped or jolted from its site. Provisions should be made to prevent the unit from being moved after installation. Once the unit is plumbed, secure the locking castors on the unit's base. If the unit is located in a heavy traffic area where the possibility of collision is imminent, it may be necessary to secure the unit to the site using blocks or mounting brackets.

Flexible tubing, if used, should be heavy wall or reinforced construction. All tubing should be rated to withstand 110 psi at +35°C. Make sure all tubing connections are securely clamped. Avoid running tubing near radiators, hot water pipes, etc. If substantial lengths of tubing are necessary, insulation may be required to prevent loss of cooling capacity.

Tubing and insulation are available from NESLAB. Contact our Sales Department for more information (see Preface, After-sale Support).

It is important to keep the distance between the unit and the instrument being cooled as short as possible, and to use the largest diameter tubing practical. Tubing should be straight and without bends. If diameter

reductions must be made, they should be made at the inlet and outlet of the instrument being cooled, not at the HX.

If substantial lengths of connecting tubing are required, they should be pre-filled with cooling fluid before connecting them to the unit.

Water-cooled units
The plumbing connections used to connect the water-cooled condenser in the HX to the facility cooling water supply are located at the rear of the unit (labelled TAP WATER and DRAIN). On models HX-75 through HX-300, these fittings are ½ inch FPT. On models HX-500 and HX-750, these fittings are 1 inch FPT.

Remove the plastic protective plugs from the TAP WATER and DRAIN connections. Connect the TAP WATER fitting to the facility cooling water supply. Connect the DRAIN fitting to a drain.

Fluids

The selected cooling fluid must have a viscosity of 50 centistokes or less at the lowest operating temperature.



If your unit is equipped with a plate heat exchanger, do not use 100% water as a recirculating fluid. Due to the physical nature of a plate heat exchanger, and its response to temperature changes, using 100% water may cause the plate heat exchanger to rupture.



Never use flammable or corrosive fluids with this unit. Distilled and deionized water may be aggressive and cause material corrosion. Please contact NESLAB before subjecting this unit to prolonged exposure to distilled or deionized water.

Tap water is the recommended fluid for operation from +8°C to +35°C.

Below +8°C, a non-freezing solution is required. A 50/50 mixture, by volume, of water and laboratory grade ethylene glycol is suggested.



Do not use automobile anti-freeze. Commercial anti-freeze contains silicates that can damage the pump seals. Use of automobile anti-freeze will void the manufacturer's warranty.

For units with extended temperature ranges above +35°C, tap water is the recommended fluid up to +80°C. Above +80°C, the user is responsible for the fluid(s) used.

Water Quality Recommendations

Unfavorably high total ionized solids (TIS) can accelerate the rate of galvanic corrosion. These contaminants can function as electrolytes which increase the potential for galvanic cell corrosion and lead to localized corrosion such as pitting which can be observed at the studs and on the outside surface of cooling coils. Eventually, the pitting will become so extensive that the coil will leak refrigerant into the water reservoir.

As an example, raw water in the United States averages 171 ppm (as NaCl). The recommended level for use in a water system is between 0.5 to 5.0 ppm (as NaCl).

Recommendation: Initially fill the tank with distilled/deionized water. Do not use untreated tap water as the total ionized solids level may be too high.

Maintain this water quality at a resistivity of between 1 to 10 megohm-cm (compensated at 25°C) by using a purification system. Although the initial fill may be as high as 10 megohm-cm (compensated at 25°C), the desired level for long time usage is 1 to 3 megohm-cm (compensated at 25°C).

The above two recommendations will reduce the electrolytic potential of the water and prevent or reduce the galvanic corrosion observed.

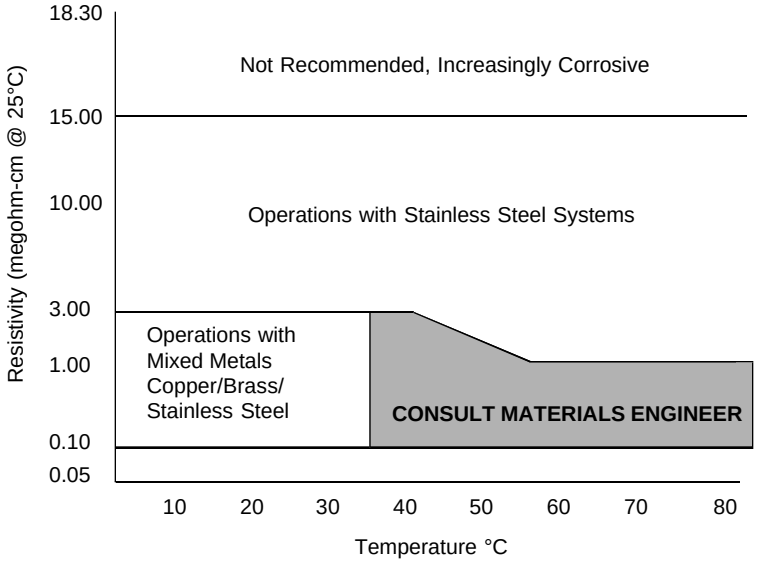

Water Quality Considerations

Filling Requirements

The reservoir access panel is located at the left rear corner of the case top, below an access panel. To open the access panel, slide the latch back (towards the rear of the unit) and lift.

Loosen the thumbscrews and remove the reservoir cover.

Fill the fluid reservoir with cooling fluid to within 1 inch of the top.

The fluid capacity of the instrument being cooled and the recirculation lines may be significant. To prevent the lowering of the fluid level in the reservoir below the operating level, have extra cooling fluid on hand to keep the reservoir filled to within 1 inch of the top.

When the recirculating system is full, replace the reservoir cover. Close the access panel.

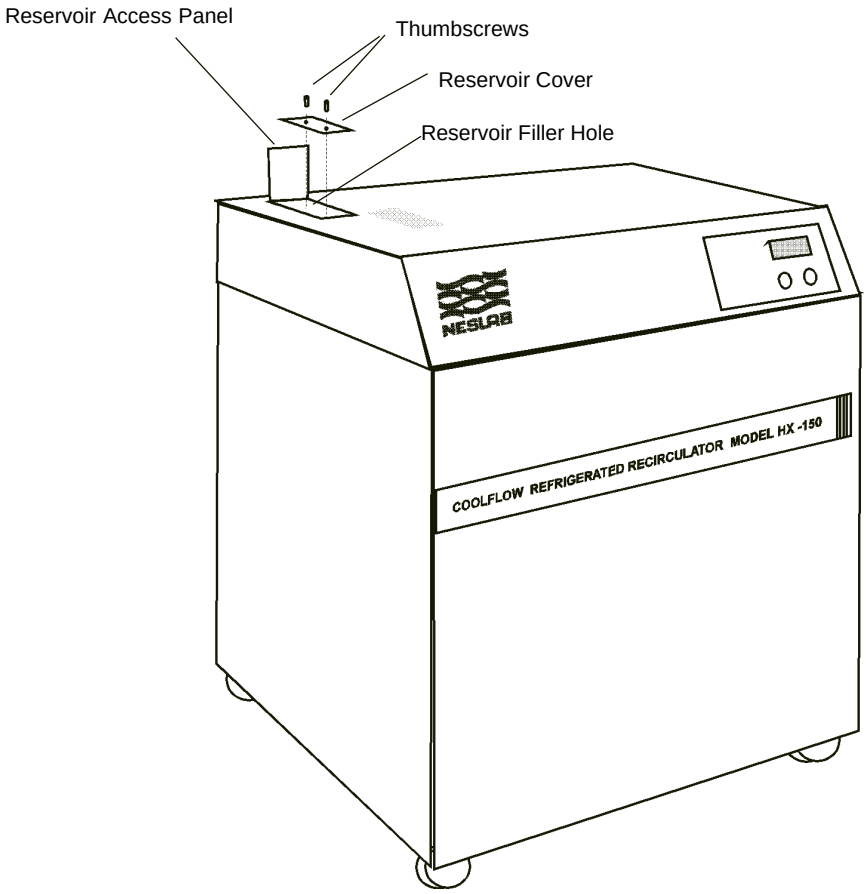

Section IV Temperature Controllers

Temperature Controllers

The standard temperature controllers available with HX units are: Digital (Panel mounted or Remote) and Digital with Interlock. This section explains the installation (if applicable) and operation of the controllers.

Refrigeration Control

On “standard” units, the refrigeration compressor runs continuously, unless the fluid temperature exceeds +40°C. However, on some “custom” units equipped with an extended temperature range, the compressor may operate at higher temperatures. A hot gas by-pass system is used to maintain constant temperature in all units.

The Idle and Cool indicators, located on the control panel, indicate the status of the refrigeration system. The Idle indicator is lit when the unit is in the hot gas by-pass mode. The Cool indicator is lit when the refrigeration system is removing heat from the cooling fluid. As the fluid temperature approaches the temperature setpoint, the indicators cycle on and off to indicate the duty cycle of the system. The unit can be in Cool or Idle, but never both at the same time. A balance between Cool and Idle controls the temperature.

Start Up

Before starting, check all electrical and plumbing connections and make sure the recirculating system (the HX, your application, and the recirculation lines) has been properly filled with cooling fluid. Also, make sure the flow control valve is fully closed (see Section V, Flow Control). For CE Mark units ensure the circuit breaker on the right hand side of the unit is on.

For water-cooled units — ensure that the facilty water is turned on.

Models HX-200 through HX-750 are equipped with a compressor crankcase heater. The crankcase heater warms the oil in the compressor and prevents refrigerant from mixing with the oil. Before start up, the unit must be connected to its power source for at least 12 hours. This allows time for the oil to be heated and separate from the refrigerant.

To start the unit, place the Power On/Off switch in the On position. The pump and refrigeration system will start. The Temp°C display will indicate the reservoir fluid temperature. After starting recheck the fluid level, a "top off" may be needed. To shut the unit off, place the Power On/Off switch in the Off position.

When the unit is shut off, wait approximately five minutes before restarting. This allows time for the refrigeration pressures to equalize. If the pressures are not allowed to equalize, the compressor will short-cycle (clicking sound) and no cooling will occur.

Digital
(Panel mounted)

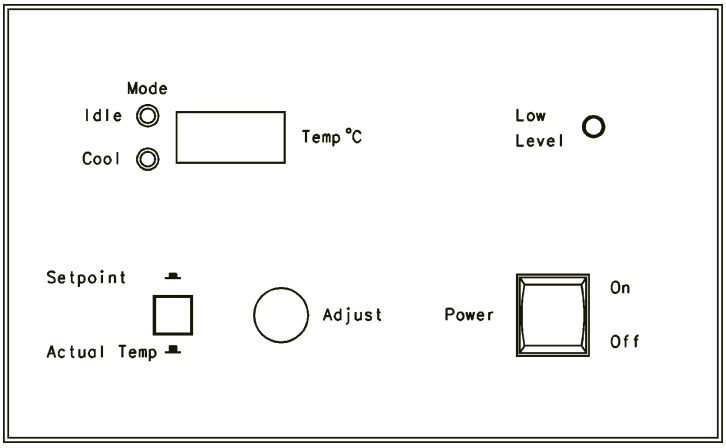

Digital Temperature Controller

Temperature Adjustment

To display the temperature setpoint, press and hold the Setpoint/Actual Temp button. To adjust the setpoint, press and hold the Setpoint/Actual Temp button and turn the Adjust dial until the desired temperature setpoint is indicated on the Temp°C LED display. Once the setpoint is adjusted, release the Setpoint/Actual Temp button. The Temp°C LED display will indicate the temperature of the fluid in the reservoir.

NOTE: Inadvertent movement of the Adjust dial will result in a change in the setpoint. The change will not be immediately reflected on the Temp°C display unless the Setpoint/Actual Temp button is pressed. The display will eventually change as the unit responds to the new setpoint

Low Level Warning

The Low Level indicator is connected to a float switch in the reservoir. The indicator warns the user of a low cooling fluid level in the reservoir. A low fluid level condition occurs when the cooling fluid in the reservoir drops below the operating level. The indicator serves only as a warning. The unit will not shut down as a result of a low fluid level condition.

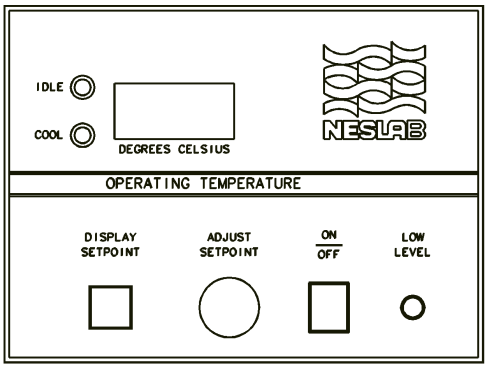

Digital Temperature Controller
(remote)

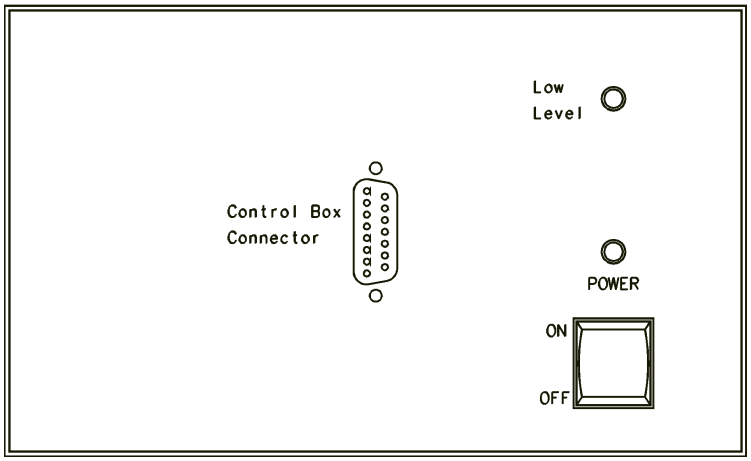

Digital Temperature Controller

Installation

Controller dimensions are 4¾" x 7¾" x 3¾" (H x W x D).

Connect the Digital remote box to the unit by securing the connector on the remote box's cable to the Control Box Connector receptacle on the operator panel on the front of the case top.

Start Up

To start the unit, place the ON/OFF switch on the operator panel of the unit in the ON position and press the ON/OFF button on the remote box. The pump and refrigeration system will start, the POWER indicator on the operator panel will light and the DEGREES CELSIUS display on the remote box will indicate the fluid temperature. Either ON/OFF switch will shut the unit off.

Temperature Adjustment

To display the temperature setpoint, press and hold the DISPLAY/SETPOINT button. To adjust the setpoint, press and hold the DISPLAY/SETPOINT button and turn the ADJUST SETPOINT dial until the desired temperature setpoint is indicated on the DEGREES CELSIUS LED display. Once the setpoint is adjusted, release the DISPLAY/SETPOINT button. The DEGREES CELSIUS LED display will indicate the temperature of the fluid in the reservoir.

NOTE: Inadvertent movement of the ADJUST SETPOINT dial will result in a change in the setpoint. The change will not be immediately reflected on the DEGREES CELSIUS display unless the DISPLAY/SETPOINT button is pressed. The display will eventually change as the unit responds to the new setpoint.

Low Level Warning

The LOW LEVEL indicator is connected to a float switch in the reservoir. The indicator warns the user of a low cooling fluid level in the reservoir. A low fluid level condition occurs when the cooling fluid in the reservoir drops below the operating level. The indicator serves only as a warning. The unit will not shut down as a result of a low fluid level condition.

Digital with Interlock

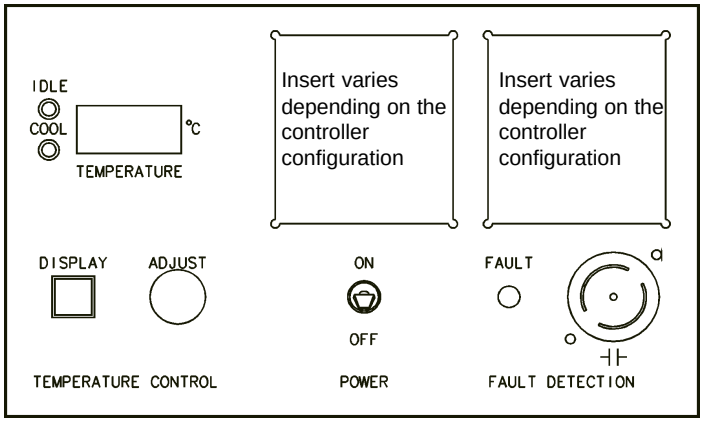

Digital with Interlock Temperature Controller

Description

The Digital with Interlock temperature controller is a Digital temperature controller with up to four monitoring options: low temperature, high temperature, low fluid level, and low flow. The controller can be built with any combination of these four monitors.

Temperature Adjustment

To display the temperature setpoint, press and hold the DISPLAY button. To adjust the temperature setpoint, press and hold the DISPLAY button and turn the ADJUST dial until the desired temperature setpoint is indicated on the TEMPERATURE °C LED display. Once the setpoint is adjusted, release the DISPLAY button. The TEMPERATURE °C display will indicate the temperature of the fluid in the reservoir.

NOTE: Inadvertent movement of the ADJUST dial will result in a change in the setpoint. The change will not be immediately reflected on the TEMPERATURE °C display unless the DISPLAY button is pressed. The display will eventually change as the unit responds to the new setpoint.

Fault Response

Controllers with a START switch are configured to shut off in the event that a fault occurs. Controllers NOT equipped with a START switch will allow the unit to continue to operate if a fault occurs. This option is available for customers who are willing to accept the risk of damage to the unit in order to continue to provide cooling fluid to the instrument being cooled.

With either controller configuration, the relay contacts connected to the controller receptacle will open and the FAULT indicator will light if a fault occurs. The cause of the fault must be identified and corrected before the unit can be restarted.

START Switch

If the controller is equipped with a START switch, a fault will cause the unit to shut down. Press the START switch to restart the unit after the fault has been corrected. If the fault has not been corrected, the unit will not start and the FAULT indicator will light when the START switch is pressed.

Temperature Monitors

The optional high and low temperature monitors are connected to sensors that monitor the temperature of the cooling fluid as it exits the reservoir. The monitors protect the system from exposure to excessively hot or cold cooling fluid. A temperature fault occurs when the fluid temperature exceeds the set temperature limit.

To adjust either temperature monitor, turn the appropriate calibrated dial to the desired temperature limit.

Low Fluid Level Monitor

The low fluid level monitor is connected to a float switch in the reservoir. If the controller is equipped with a LOW LEVEL indicator, the low level monitor is not connected to the fault circuit. The indicator will light if the reservoir cooling fluid drops below the operating level. The indicator serves only as a warning. A fault will not occur as a result of a low level condition.

If the controller is NOT equipped with a LOW LEVEL indicator, the low level monitor is connected to the fault current. A fault will occur if the reservoir cooling fluid level drops below the operating level.

Low Flow Monitor

The optional low flow monitor is connected to a flow switch in the RETURN line. A low flow fault occurs when the flow rate of the returning cooling fluid drops below 0.3 gallons per minute (1.0 liters per minute).

When starting a unit with a controller equipped with both a low flow monitor and a START switch, the START switch must be held in the ON position until the flow switch “closes” (2 or 3 seconds). If time is not allowed for the flow switch to close, the unit will stop when the START switch is released.

Interlock Relay Contacts

A set of contacts are connected to a receptacle on the operator panel. The contacts are rated 15A, 125V. This is not a power inlet or outlet. The receptacle is isolated from the circuitry. Its ground pin is connected to the chassis. The contacts are normally open: they are closed when the unit is running normally (no faults present), and they are open when the unit is off or when a fault occurs.

Section V Operation

Flow Control

The flow control handle is connected to a valve that controls the flow rate of the cooling fluid to the instrument being cooled. The handle is located on the right side of the unit and is labelled RECIRCULATING FLOW CONTROL.

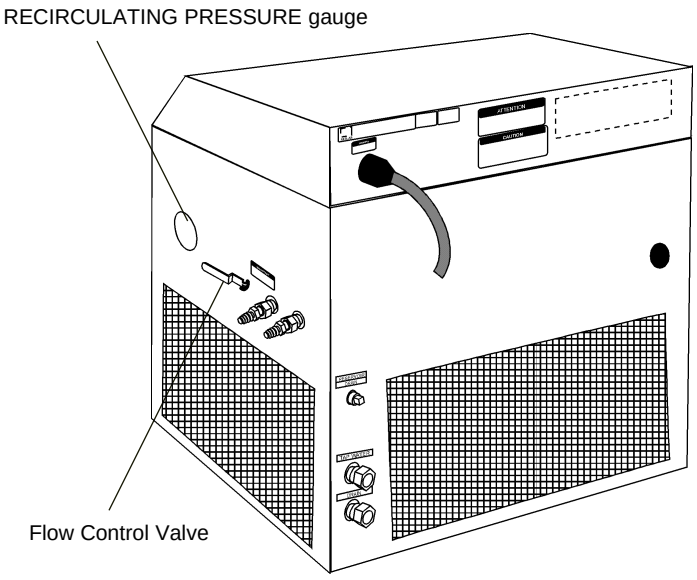

When the handle is in the “+” position, the valve is open and all possible cooling fluid is supplied to the instrument being cooled. When the handle is in the “-” position, the valve is closed and no cooling fluid is supplied to the instrument being cooled. When the handle is between these two positions, the flow rate of the cooling fluid is between full flow and no flow. Use a flow meter on the SUPPLY line to adjust the desired flow rate.

Make sure the flow control handle is closed before starting the unit. Once the unit is running, use the handle to slowly open the valve until the desired flow rate is adjusted.

On units equipped to detect a low flow condition (Digital with Interlock temperature controllers equipped with a low flow monitor), the flow control valve must be opened slightly to allow fluid to circulate through the flow switch that monitors the flow rate. A flow rate of more than 0.3 gallons per minute (1.0 liters per minute) is necessary. If the flow is completely shut off, or if flow is not adequate, a low flow fault will occur and the unit will not start.



Never “crank” the valve wide open from the closed or slightly open position.

Pressure Gauge

The RECIRCULATING PRESSURE gauge is located next to the flow control handle. The gauge indicates the operating pressure of the system.

Pressure Relief Valve
(PD and TU Pumps Only)

Units with a PD-2 or any TU type pump have an adjustable pressure relief valve. Refer to the pump identification label on the rear of the case top or rear of analog controller to identify the specific pump in your unit.

The pressure relief valve establishes the maximum operating pressure of the unit. If the pressure of the fluid leaving the pump exceeds the valve setting, the relief valve will bypass the fluid within the unit to relieve the pressure. The valve does not determine the actual operating pressure; the operating pressure of the system is determined by the back pressure of the connected equipment and the setting of the flow control valve. If adjustment seems necessary, consult our Service Department for assistance.

Before calling, refer to the serial number label on the rear of the case top to obtain the following:

- *unit part number*
- *unit serial number*

High Pressure Cutout
(Water-Cooled Units Only)

Should the unit's refrigeration discharge pressure become too high the high pressure cutout will activate and shut down the unit. High pressures can be caused by a lack of cooling water to the compressor or debris in the refrigeration lines.

Once the cause of the problem has been identified and corrected you must manually reset the cutout. The cutout location depends on the size of your unit. On the HX-75, it is behind the right side panel, on the HX-100 and HX-150 it is behind the left side panel, and on the HX-200 through HX-750 it is behind the rear panel.

Locate the white reset switch on the high pressure cutout. Press in on the switch until a "click" is heard. If the reset does not "click" the cutout was not activated and the unit shut down occurred for another reason.

Section VI Special Features

Pump Motor Overload Protector

Refer to the serial number label for the specific electrical requirements of your unit; specifically, identify the phase requirements of your unit.

The pump motor overload protector prevents the pump motor from exposure to excessive current. If an overload fault occurs, due, for example, to excessive pressure or flow, or excessive ambient temperature, the overload protector will shut off the pump motor. The overload protector will automatically reset after approximately one to two minutes.

If a fault occurs, a red lamp on the protector enclosure will light while the pump motor is off. The lamp goes out once the protector resets.

The pump motor overload protector enclosure is located directly under the fluid reservoir. It is at the left rear corner for HX200s and HX300s units. It is at the side access panel for HX500s and HX750s units.

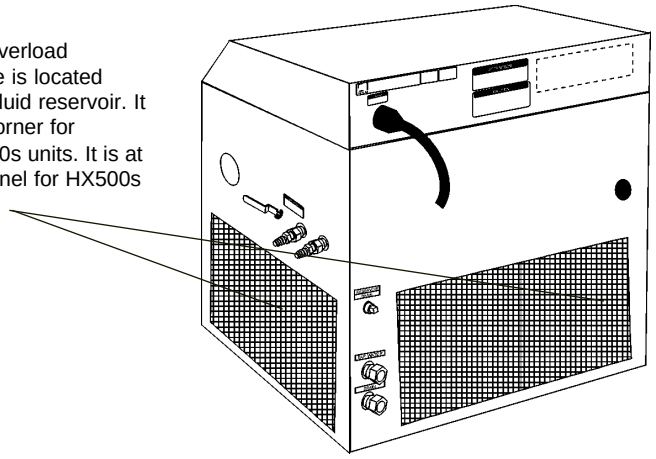

The unit's fault response also varies depending on the unit's configuration.

If the unit has a Digital temperature controller and a single phase pump motor, the unit will continue to run if an overload fault occurs. The pump will restart as soon as the protector resets.

If the unit has a Digital controller and a three phase pump motor, the pump and refrigeration system will both shut down until the protector resets.

If the unit has a Digital with Interlock temperature controller with a low flow monitor, the unit will shut down due to a low flow fault. The unit must be manually restarted after the protector resets.

The overload protector can be adjusted to require manual resetting after an overload fault. If you are unsure of the phase of the pump motor in your unit, contact our Service Department (see Preface, After-sale Support).

Heater Package (Optional)

The heater package option consists of an immersion heater in the unit's fluid reservoir, a high temperature limit device, a solid state zero-crossing relay, a heater ENABLE/DISABLE switch and a FAULT indicator. The ENABLE/ DISABLE switch and the FAULT indicator are located on a small control box appended to the right side of the case top. The FAULT indicator will light if the high temperature limit device is tripped. The high temperature limit device will disconnect power to the heater if the heater surface temperature exceeds a preset limit.

Heater Package Control Box (Typical)

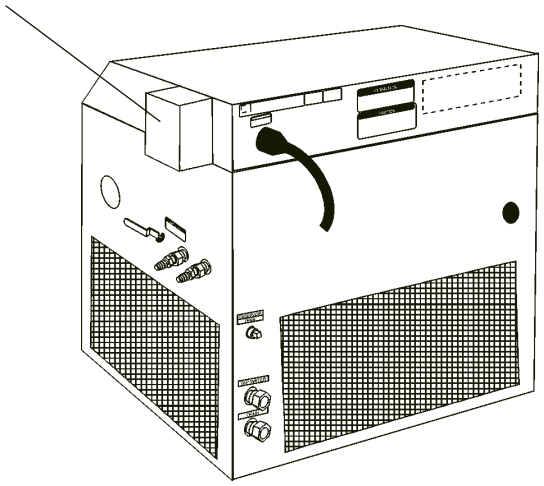

With the ENABLE/DISABLE switch set to ENABLE, the heater will cycle on and off under the control of the temperature controller. With the switch in the DISABLE position, the heater will remain off.

The heater high temperature limit device senses the surface temperature of the heater. If the heater temperature becomes too high, the limit device opens a mechanical relay to remove power from the heater.

The heater surface temperature may operate several degrees higher than the reservoir fluid. The limit device is factory set to a temperature above the upper limit of the temperature controller's range.

For personal safety and equipment reliability, the following procedure must only be performed by a qualified technician. Contact our Service Department for assistance (see Preface, After-sale Support).

To reset a tripped temperature limit device, lift and open the case top. The case top is secured to the unit base by a hinge between the case top and the base (along the rear of the unit), and by two spring clips located at the front corners, see page 7. To gain access to the temperature limit device, disengage the spring clips with a flat bladed screw driver and lift the front of the case top and tilt it back. A support brace, located on the right side of the inner case, will stop and support the case top.

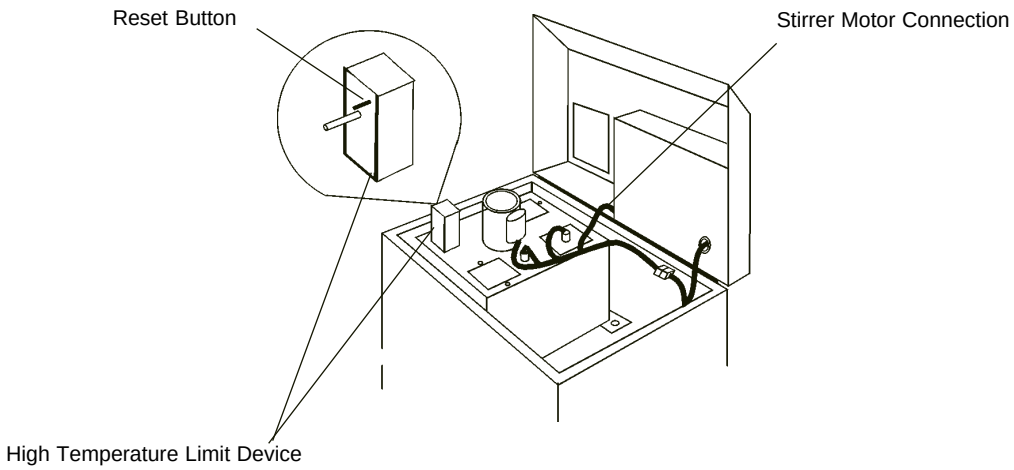

You must identify and correct the fault before restarting the unit.

The protection device and the heater power connections are located in a small stainless steel box on top of the fluid reservoir. The protection device has a reset button and a temperature limit adjustment shaft. Press the reset button to restore operation.

Some units equipped with heaters do not have a power cable. Installation of the cable is your responsibility. Wire the unit in conformance to local, state and federal electrical codes. Double check all wiring to make sure it is properly connected and protected from the elements.

The unit construction provides extra protection against the risk of electric shock by grounding appropriate metal parts. The extra protection may not function unless the power cord is connected to a properly grounded outlet. It is your responsibility to assure a proper ground connection is provided. For personal safety and equipment reliability, the following procedure should only be performed by a qualified technician.

To access the power cable connection box and install the cable:

- Lift the unit's bonnet.
- Remove the panel under the right half of the bonnet by removing the screws and the stirrer motor connection. (The stirrer motor connection is located at the lower left corner of the bonnet, see illustration above.)
- Remove the plastic plug on the rear of the bonnet. We recommend that you install an electrical conduit in place of the plastic plug.
- Insert your cable through the conduit.
- Locate the connection box and connect your cable to L1 and L2 (both connections are labeled) and to the ground stud (not labeled).
- Replace the panel and stirrer motor connection.

Remote Condenser (Optional)

Units with the optional remote air-cooled condenser are equipped with high and low refrigeration pressure monitors. The monitors are connected internally to a pressure gauge that monitors refrigeration pressure at the suction side of the compressor. The monitors protect the refrigeration system from operating under excessively high and low refrigeration pressures. A pressure fault occurs when the refrigeration pressure exceeds the set pressure limit.

The status of the monitors is indicated by the COMPRESSOR LOW PRESSURE and COMPRESSOR HIGH PRESSURE indicators located on the operator panel.

In the event of either a low or high refrigeration pressure fault, the unit will shut down. The unit must be manually restarted after the cause of the fault has been identified and corrected. If both indicators are lit simultaneously, an interruption in the main power supply has occurred.

Nitrogen Purge (Optional)

Units equipped with nitrogen purge valves are designed to accept a constant flow of dry nitrogen into the reservoir. The nitrogen blankets the cooling fluid reducing fluid evaporation.

Remove the reservoir cover by removing the screws. Fill the reservoir with fluid. Replace the reservoir cover and screws. Connect the nitrogen line to the valve on the reservoir cover.

A pressure regulator, set to 0.5 psig (0.35 kg/cm^3) or lower, should be used to prevent fluid overflow.

Particulate Filters (Optional)

Some custom units are fitted with particulate filter assemblies attached to the supply side of the recirculation water. The frequency for cleaning/changing the filter depends on your usage. Should the unit's performance be degraded, check the filter.

Filters are available from NESLAB, contact our Customer Service Center. Before calling refer to the serial number label on the rear of the unit to obtain the following information:

-unit serial number
-unit part number

15 pin Accessory Connector (Optional)

Units with digital controllers may be modified with a 15 pin accessory connector. To enable the connector slide the LOCAL/REMOTE switch on the temperature controller to the REMOTE position. The pin out information is listed below.

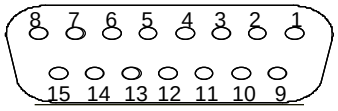

15 pin D-subminiature female receptacle

Pin #	Function
1	Chassis ground.
2	No connection.
3	Span +. Indicates the maximum setpoint value the unit can be set to operate. The temperature scale is 10mV/°C, referenced to analog ground, pin 6 (example: +350mV = +35.0°C).
4	Span -. Indicates the minimum setpoint value the unit can be set to operate. The temperature scale is 10mV/°C, referenced to analog ground, pin 6 (example: +50mV = +5.0°C).
5	No connection.
6	Analog ground. The analog ground is physically separated from the power ground throughout the unit. To prevent offsets that result from ground currents, the analog and power grounds are only connected at the unit's power supply. Analog ground should only be used as a reference pin .
7	Sensor temperature (current limited through 2.7K OHM resistor). The fluid temperature, as measured by the controller's sensor located in the reservoir, can be read at this pin. The temperature scale is 10mV/°C, referenced to analog ground, pin 6 (example: +150mV = +15.0°C).
8	Setpoint out. The present temperature setpoint can be read at this pin. The temperature scale is 10mV/°C, referenced to analog ground, pin 6 (example: +150mV = +15.0°C).
9	Power Ground.
10	Heater output. Will source 3V at 6mA.
11	No connection.
12	Digital display (input only). An external voltage can be displayed on the operator panel digital display by applying the voltage to this pin. The display has a low input resistance and a full scale rating of ±1.99VDC. Input is referenced to analog ground, pin 6. The maximum voltage applied to the display should be limited to ±2VDC.
13	- 5V. Power supply of -5VDC (15mA maximum).
14	+5V. Power supply of +5VDC (15mA maximum).
15	Setpoint in. The temperature setpoint can be controlled by applying a known voltage to this pin. The temperature scale is 10mV/°C, referenced to analog ground, pin 6 (example: +230mV = +23.0°C).

External Pressure Regulator (Optional)

For applications requiring a maximum pressure less than 55 psi, an External Pressure Reducer (EPR) is available. An EPR allows an adjustable operating pressure of 10 to 50 psi. If the pressure of the fluid leaving the unit exceeds the valve setting the relief valve will bypass the fluid back into the unit to relieve the pressure. The pressure of the system is determined by the back pressure of the connected equipment and the flow rate of the recirculating fluid to your application.

Connect the EPR assembly as shown below. Tighten the hose clamps tight enough to prevent leakage. Do not over-tighten or the clamps will “bite” into the flexible tubbing and can cause excessive wear.

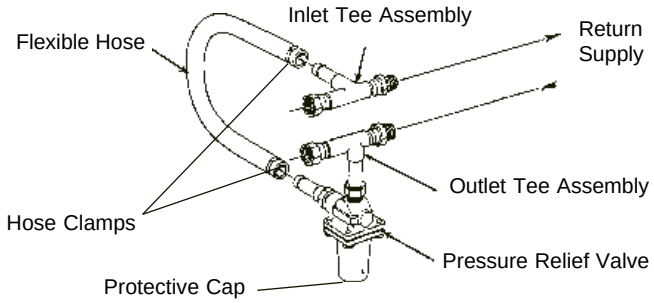

Connect the outlet tee assembly to the inlet of your application. Connect the inlet tee assembly to the outlet of your application.

Adjustment

When adjusting the relief valve some leaking may occur, place a container under the valve during adjustment.

Remove the protective cap and locate a threaded fitting with a slot for a large screwdriver. Hold the threaded fitting in place and loosen the lock nut on the valve body until it is almost flush with the threaded fitting. Unscrew the threaded fitting three to four turns. (If the threaded fitting unscrews completely from the valve housing, screw it back in two to three turns.)

To simulate blockage, close (or pinch off) the hose between the EPR outlet tee assembly and your application. Monitor the operating pressure of the HX unit. Turn the threaded fitting until the desired relief pressure is set (the EPR valve cannot be set lower than the total back pressure of your instrument, or flow will not be received).

Tighten the locknut to secure the position of the threaded fitting. Open the hose between the EPR outlet tee assembly and your application.

Automatic Refill Device (Optional)

The automatic refill device is designed to maintain the correct level of cooling fluid in the reservoir. The device consists of a float switch in the reservoir and a solenoid valve on top of the reservoir. If the cooling fluid level falls, the float switch will drop, opening the solenoid valve and allowing make-up fluid to fill the reservoir. Once the cooling fluid level reaches the proper level, the float switch will rise and the solenoid valve will close.

The plumbing connection for the refill device is located at the right rear corner of the unit and is labelled AUTO REFILL. This connection is a $^{3}/_{8}$ inch OD stainless steel barbed fitting.

Connect this fitting to a make-up fluid source using $^{5}/_{16}$ or $^{3}/_{8}$ inch ID flexible tubing. Make sure all tubing connections are securely clamped.

Tubing is available from NESLAB. Contact our Sales Department for more information (see Preface, After-sale Support).

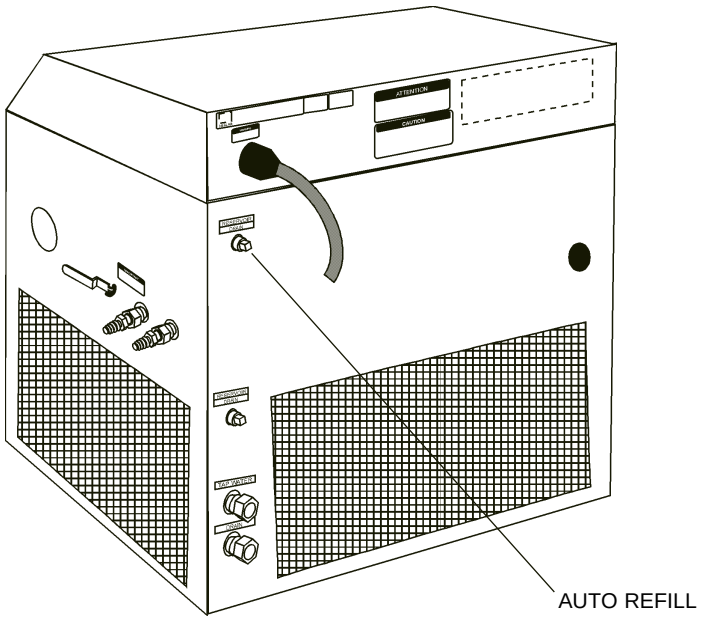

Section VII Maintenance

Service Contracts

NESLAB offers on-site Service Contracts that are designed to provide extended life and minimal down-time for your unit. For more information, contact our Service Department (see Preface, After-sale Support).

Condenser Cleaning (Air-cooled units only)

For proper operation, the unit needs to pull substantial amounts of air through a finned condenser. A build up of dust or debris on the fins of the condenser will lead to a loss of cooling capacity.

The frequency of cleaning depends on the operating environment. It is recommended that a visual inspection of the condenser be made monthly after initial installation. After several months, the frequency of cleaning will be established.

For "standard" air-cooled units, periodic vacuuming of the fins on the condenser is necessary.

For units with the optional remote air-cooled condenser, remove any debris from around the condenser site. If a visible accumulation of dust or dirt is found on the condenser fins, the condenser should be cleaned with a condenser cleaning solvent and rinsed with water.



Exercise caution not to damage the condenser fins or coil. Condenser fin or coil damage can result in a loss of performance and, in extreme cases, refrigeration system failure.

Hoses

The unit's internal and external hoses and clamps should be inspected and tightened on at least a semiannual basis.

Algae

To restrict the growth of algae in the fluid reservoir, it is recommended that the reservoir cover be kept in place and that all recirculation lines be opaque. This will eliminate the entrance of light which is required for the growth of most common algae.

NESLAB recommends the use of Chloramine-T, one gram per gallon.

Section VIII Service

For personal safety and equipment reliability, the following procedure should only be performed by a qualified technician. Contact our Service Department for assistance (see Preface, After-sale Support).

Configuration

Case Top

The unit has a hinged case top to allow service access. The case top is secured to the top of the unit base by a hinge between the case top and base (along the rear of the unit), and by two spring clips located at the front corners, see illustration on page 7. To gain access to the pump assembly or the reservoir area, disengage the spring clips with a flat bladed screw driver and lift the front of the top cover and tilt it back. A support brace, located on the right side of the inner base, will stop and support the case top. Ensure the spring clips engage when the top is lowered back into position.

Reservoir Cover

Access to the inside of the fluid reservoir is necessary to clean the reservoir. The figure on the next page illustrates a typical layout of the components mounted on top of the reservoir cover. The component layout varies depending on the unit size. If you are unable to identify the components on your unit's reservoir cover, contact our Service Department for assistance (see Preface, After-sale Support).

Disconnect the unit from its power source before removing the reservoir cover.

Locate the reservoir stirrer motor (units with plate heat exchangers and HX-75s do not have a stirrer motor; HX-500s and HX-750s have two stirrer motors). Disconnect the motor wires at the plug located on the side of the electrical box cover. Also disconnect the green ground wire that connects the ground stud on the reservoir cover to the unit's grounding bar.

Locate the float switch mounting bracket. Remove the two stainless steel screws that secure the bracket to the reservoir cover. Carefully remove the mounting bracket and place the assembly in an area adjacent to the reservoir. Make sure not to strain the connecting wires.

Locate the temperature sensor mounting plate. Remove the two stainless steel screws that secure the bracket to the reservoir. Carefully remove the sensor mounting plate with the sensor(s) attached and place the assembly in a protected area adjacent to the reservoir. Make sure not to damage the sensor(s) or strain the connecting wires.

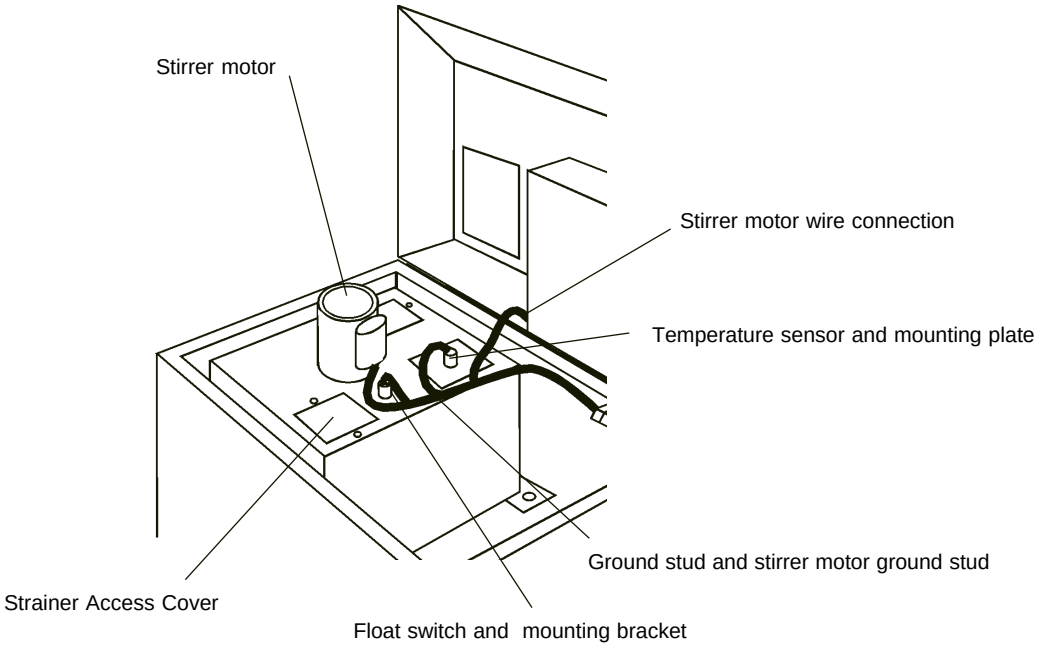

Remove the stainless steel screws that secure the reservoir cover to the reservoir. Remove the cover and place it to one side in a manner that protects the stirrer motor blades from being bent.

Service Access Panels

Service panels on your unit allow easy access to the pump and refrigeration assemblies. Panel location varies with the size and type of unit. The panels are designed to allow removal without disconnecting the HX from the instrument being cooled.

Disconnect the unit from its power source before removing any of the access panels.

Reservoir Cleaning

Periodic reservoir cleaning is necessary. It is recommended that a visual inspection of the reservoir be made monthly after initial installation. After several months, the frequency of cleaning will be established.

Disconnect the unit from its power source and drain the reservoir before cleaning the reservoir.

Lift the top cover to access the reservoir. Remove the reservoir cover as described in Section VIII, Configuration.

Clean the reservoir with a cleaning fluid compatible with the recirculating system and the cooling fluid.

Do not use steel wool or other abrasive materials. They can scratch the stainless steel surface and initiate rusting.

When the reservoir is clean, re-assemble the cover assembly and close the case top.

Refer to Section III, Filling Requirements for instructions on replacing the cooling fluid.

Pump Strainer
(PD and TU Pumps Only)

If debris is drawn into the recirculating system, the strainer will prevent the material from being sucked into the pump and damaging the pump vanes.

After initial installation, the strainer may become clogged with debris and scale. Therefore, the strainer must be cleaned after the first week of use. After this first cleaning, a monthly visual inspection is recommended. After several months, the cleaning frequency will be established.

Disconnect the power cord from the power source and drain the fluid reservoir before cleaning the strainer. Do not operate the unit with the strainer removed.

PD-2 and TU Pumps

The wire mesh pump strainer is located in the reservoir on the pump suction line. Remove the strainer access panel located on top of the reservoir cover to access the strainer.

Cover the strainer with a plastic bag to help catch any debris which may become free.

Unscrew the strainer and rinse it with water. Replace the strainer. Refer to Section III, Filling Requirements for instructions on replacing fluid.

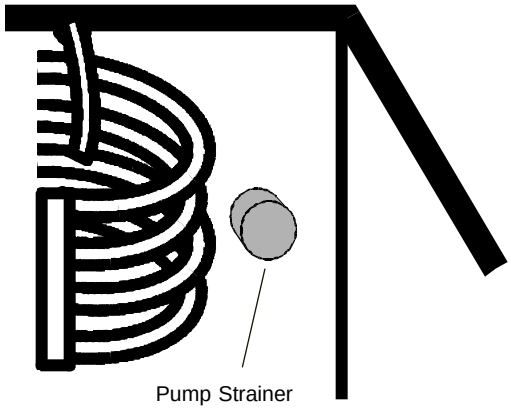

Reservoir cover deleted for clarity

Flow Filter Strainer (Optional)

Unit's equipped with flow switches have flow filter strainers located behind the top right access panel on the inlet side of the flow switch.

Unscrew the locknut and remove the screen. Clean the screen by rinsing it with water.

Replace the strainer and locknut. Refer to Section III, Filling Requirements for instructions on replacing the cooling fluid.

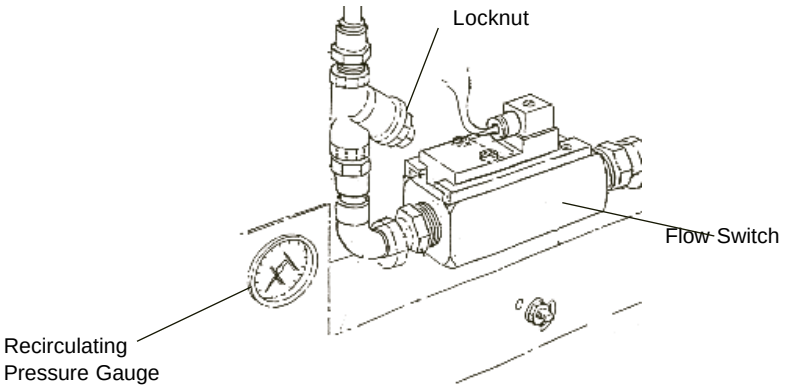

Phase Rotation

Refer to the serial number label on the rear of the case top or rear of analog controller for the specific electrical requirements of your unit; specifically, identify the phase requirements of your unit.

Three phase units with three phase pump motors have a phase rotation interlock. The interlock prevents the unit from starting if the phase rotation is wrong. If the unit will not start, see Section IX, Checklist. If the options in the checklist are not applicable, the problem may be phase rotation.

Disconnect the unit from its power source, remove the rear panel and the junction box cover (if so equipped). Reverse any two line conductors on the line side of the relay.

Never remove the green ground wire.



Replace the junction box and the rear panel. Reconnect the unit to its power source. If the unit will not start, contact our Service Department.

If you are unsure whether your three phase unit has a three phase pump motor, contact our Service Department (see Preface, After-sale Support).

Pump Lubrication

Units with PD-2 pumps require pump motor lubrication. Refer to the pump identification label on the rear of the case top to identify the specific pump in your unit.

Motors used to drive the pump are manufactured by several companies. These motors use sleeve type bearings with large oil reservoirs. Oiling instructions are generally posted on each motor. In the absence of instructions, add approximately 30 to 35 drops of SAE 20 non-detergent oil in each fill hole on the following schedule (SAE 20 = 142 CS viscosity):

Duty Cycle	Oiling Frequency
Continuous	Once every year
Intermittent	Once every 2 years
Occasional	Once every 5 years

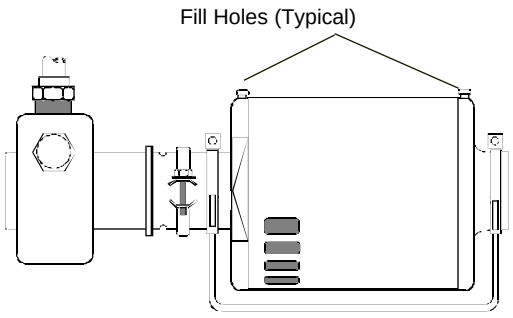

Suction Discharge Pressure Speed Check

Air-Cooled Standard and High Temperature Units (All Pump Types)[1]

Unit	Suction(psi)	Discharge(psi)	Speed Check(°C/Minute)
HX-75	77 - 84	225 - 250	1.5 - 1.7
HX-100	75 - 83	245 - 265	1.3 - 1.6
HX-150	70 - 73	240 - 270	2.0 - 2.5
HX-200	85 - 105	230 - 255	1.6 - 1.9
HX-300	84 - 105	270 - 305	2.4 - 2.7
HX-500	80 - 90	215 - 235	2.0 - 2.4
HX-750	65 - 75	185 - 215	

Water-Cooled Standard and High Temperature Units (All Pump Types)[2]

Unit	Suction(psi)	Discharge(psi)
HX-75	72	170
HX-100	86 - 92	180
HX-150	65	175
HX-200	85 - 90	180
HX-300	73 - 78	180
HX-500	75 - 82	150
HX-750	50 - 60	180

1. 27°C unit temperature, water in reservoir, access panel removed.
2. 25°C unit temperature, water in reservoir.

NOTE: For low temperature units please call NESLAB.

Section IX Troubleshooting

Checklist

Unit will not start

For CE Mark units, check the position of the circuit breaker on the right side of the unit.

Check power source for correct voltage output. Refer to the serial number label on the rear of the unit or rear of analog temperature controller for the specific electrical requirements of your unit. Power source must be specified voltage, ±10%.

Check house circuit breaker.

On three phase units with three phase pump motors, the phase rotation may be reversed (see Section VIII, Phase Rotation).

On water-cooled units, make sure the cooling water supply is connected to the TAP WATER connection, not the DRAIN connection. Ensure the facility water is turned on.

Check the High Pressure Cutout, it may need to be reset (see Section V, Operation).

Unit will not circulate fluid

Check the tubing between the unit and your application for obstructions.

The pump strainer may require cleaning (PD and TU pumps only). Refer to the pump identification label on the rear of the case top or rear of analog temperature controller to identify the specific pump in your unit. For instructions on cleaning the pump strainer, see Section VIII, Pump Strainer.

On units with CP type pumps, if the back pressure of the instrument being cooled is greater than the maximum pressure of the pump, adequate flow may not be obtained. Check for obstructions in the tubing.

Inadequate temperature control

Make sure the installation of the unit is in compliance with the conditions described in Section III.

Make sure the heat load of the instrument being cooled is not greater than the cooling capacity of the unit.

When the unit is shut off, wait approximately five minutes before restarting. This allows time for the refrigeration pressures to equalize. If the pressures are not allowed to equalize, the compressor will short-cycle (clicking sound) and no cooling will occur.

Service Assistance

If, after following these troubleshooting steps, your unit fails to operate properly, contact our Service Department for assistance (see Preface, After-sale Support). Before calling, please obtain the following information:

- *unit part number*
- *unit serial number*

Section X Diagrams

Refrigeration Flow Diagram (HX-75 through HX-150)

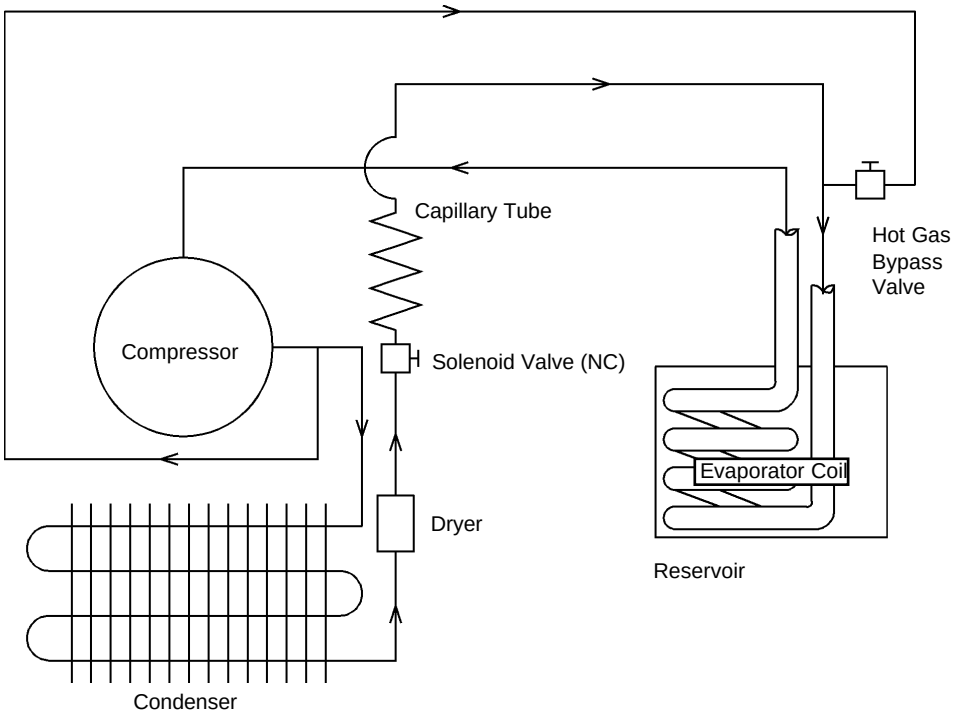

Refrigeration Flow Diagram (HX-200 through HX-750)

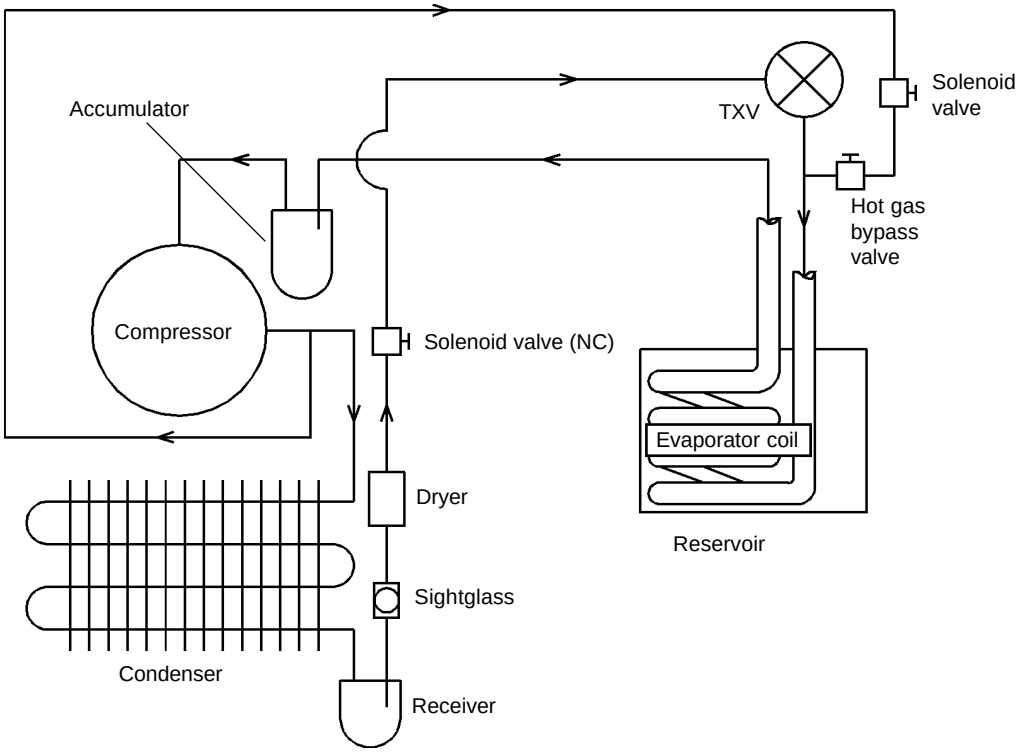

Pump Flow Diagram (CP Pumps)

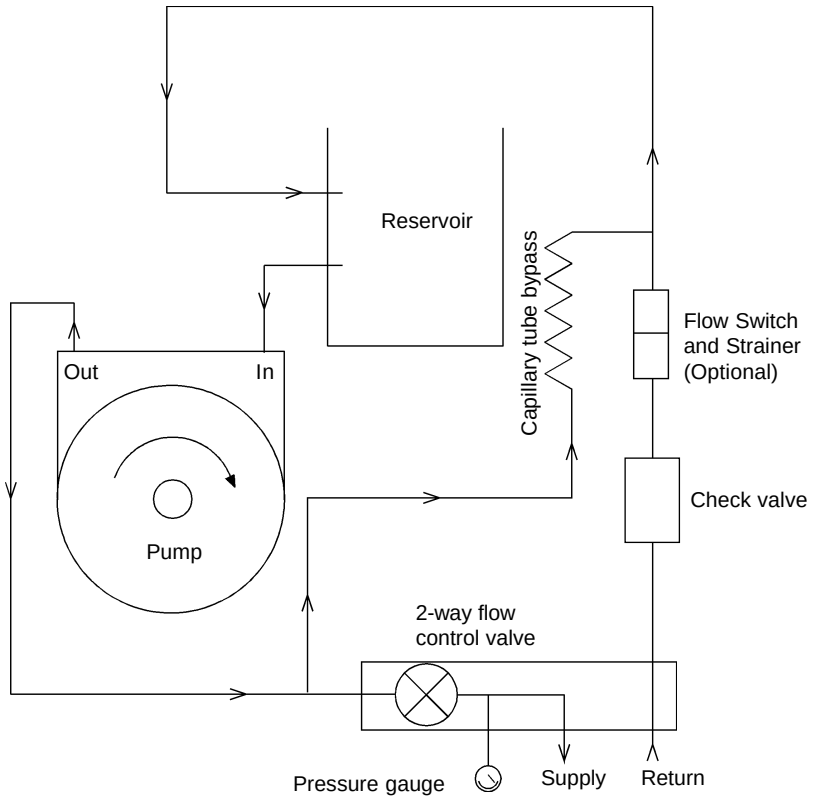

Pump Flow Diagram (PD and TU Pumps)

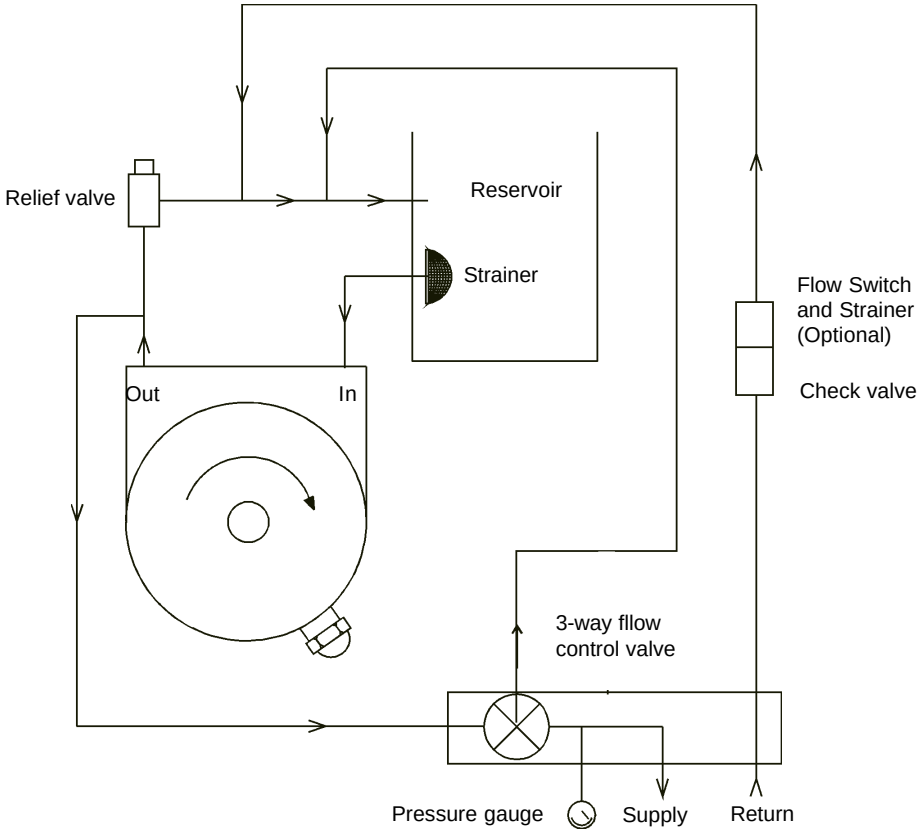

Dimensions

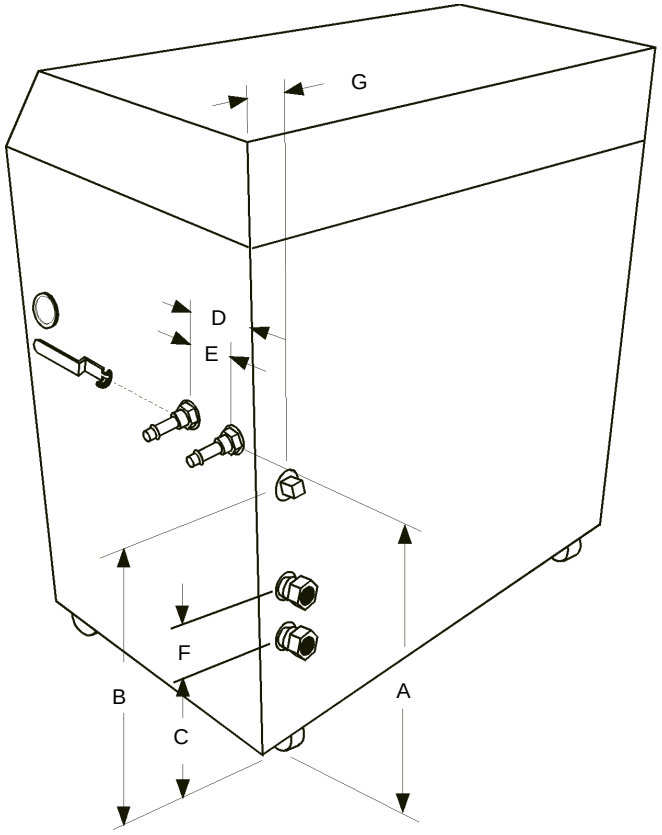

Unit Dimensions	HX75	HX100/HX150	HX200/HX300	HX500	HX750*
Dimension A	16	20	25 3/8	25¼	41
Dimension B	15¼	19¼	23½	21 1/8	33¾
Dimension C	8¼	9¼	8 3/8	5½	NA
Dimension D	7¼		7½	9½	
Dimension E	3				
Dimension F	3		3	5½	NA
Dimension G	1 3/8		1½	2¼	NA
Dimension H	2½		2 3/8	2¼	
Dimension I	24 7/8	27½	31½	35 1/8	35
Dimension J	48½	54	64 7/8	73½	86¼
Crate Dimensions (H x W x D)	46x30x27	49x33x29	55x40x33	61x54x36	74x54x36

* HX-750 air-cooled units. HX-750 water-cooled are the same size as the HX-500 units.

1. Dimensions are given in inches, ±1/8 inch.
2. Model HX-750 with a water-cooled condenser has the same dimensions as an HX-500.
3. Dimension A is the distance from the floor to the center of the SUPPLY and RETURN connections.
4. Dimension B is the distance from the floor to the center of the DRAIN connection.
5. Dimension C is the distance from the floor to the center of the tap water outlet connection.
6. Dimension D is the distance from the center of the SUPPLY connection to the rear of the unit case.
7. Dimension E is the distance between the SUPPLY and RETURN connections
8. Dimension F is the distance between the center of the TAP WATER connections (upper inlet and lower outlet).
9. Dimension G is the distance from the edge of the unit case to the center of the three plumbing connections.
10. Dimension H is the distance from the floor to the bottom of the case, height of the castors (not shown).
11. Dimension I is the depth of the unit with the case top open (not shown).
12. Dimension J is the height of the unit with the case top open (not shown).

Blank page.

APPENDIX A INTERNATIONAL QUICK REFERENCE GUIDES

HX - Serie luftgekühlt Kurzbedienungsanleitung

Installation

Das Gerät muß so plaziert werden, daß weder das Ansaugen noch Ausströmen von Luft behindert wird. Bei ungenügender Ventilation wird die Kühlleistung reduziert und kann in extremen Situationen zu einem Ausfall des Kühlsystems (Kompressors) führen.

Aufstellorte mit hoher Staubentwicklung sollten vermieden werden, und es sollte eine regelmäßige Reinigung des Gerätes durchgeführt werden. Um einwandfrei zu funktionieren, muß das Gerät große Luftmengen durch den Kondensor ansaugen. Bei Staub- und Schmutzablagerungen auf dem Kondensorheizkörper kommt es zu einem Verlust von Kühlleistung.

Das Gerät behält seine maximale Kühlleistung bis zu einer Umgebungstemperatur von ca. +24°C.

Vergewissern Sie sich, daß die Spannung Ihrer Stromanschlüsse mit der für das Gerät vorgesehenen Spannung übereinstimmt (±10%).

Die Schlauchanschlüsse (3/4 Zoll FPT) des Gerätes befinden sich an der Rückseite und sind mit SUPPLY und RETURN bezeichnet. Bitte entfernen Sie die Gummiabdichtung von beiden Anschlüssen. Schließen Sie den SUPPLY-Anschluß an den Eingang Ihres Instruments und den RETURN-Anschluß an den Ausgang Ihres Instruments an.

Um das Reservoir zu füllen, öffnen Sie die Abdeckplatte in der linken hinteren Ecke der Gehäuseoberseite und entfernen Sie die Reservoirabdeckung, indem Sie die Flügelschrauben lösen. Füllen Sie das Reservoir bis 1 Zoll unterhalb des Randes mit sauberer Kühlflüssigkeit. Wenn das zu kühlende Instrument und die Zirkulationsleitungen sehr viel Kühlflüssigkeit aufnehmen können, sollten Sie zusätzliche Kühlflüssigkeit zur Hand haben, um gegebenenfalls nachfüllen zu können.

Für den Betrieb im Arbeits-Temperaturbereich von +8°C bis +80°C empfiehlt NESLAB Leitungswasser als Kühlmittel, bei niedrigeren Temperaturen als +8°C muß eine nicht gefrierende Flüssigkeit verwendet werden. Wir empfehlen eine Mischung aus Leitungswasser und Labor Ethylen Glykol.

Inbetriebnahme

Vor Inbetriebnahme des Gerätes vergewissern Sie sich bitte, daß die elektrischen Anschlüsse und die Rohr- u. Schlauchanschlüsse sachgemäß installiert sind und daß das gesamte System mit Kühlflüssigkeit gefüllt ist.

Die Modelle HX-200 bis HX-750 müssen vor dem Starten mindestens 12 Stunden an die Stromversorgung angeschlossen werden, damit das Öl im Kompressor erwärmt werden kann und sich von der Kühlflüssigkeit abscheiden kann.

Um das Gerät einzuschalten, müssen Sie den Hauptschalter auf „ON“ stellen. Die „COOL“- und „IDLE“-Anzeigen auf der Steuertafel geben den Status des Kühlsystems an. Die COOL-Anzeige leuchtet, wenn das Kühlsystem der Kühlflüssigkeit Wärme entzieht. Die HEAT-Anzeige leuchtet, wenn sich das Gerät im Hot Gas Bypass Modus befindet.Wenn die Temperatur der Kühlflüssigkeit sich der gewünschten Temperatur nähert, blinken die Anzeigen, um den Arbeitszyklus des Systems anzugeben.

Nach dem Ausschalten des Gerätes sollten Sie vor dem Wiedereinschalten ca. 5 Minuten warten, damit das Kühlsystem einen Druckausgleich durchführen kann. Beachtet man diese Wartezeit nicht, kommt es zu kurzen Schaltfrequenzen des Kompressors und eine Kühlung ist nicht möglich.

Einstellung der Analog-Temperatursteuerung

Um die Temperatur einzustellen (setpoint), drehen Sie den °C-Schalter an der Vorderseite des Gerätes auf die gewünschte Temperatur.

Einstellung der Digital-Temperatursteuerung

Um sich den Temperatur-Setpoint anzeigen zu lassen, drücken Sie den DISPLAY-Schalter und halten Sie ihn gedrückt. Um den Temperatur-Setpoint einzustellen, drücken Sie den Display-Schalter, halten diesen, und drehen gleichzeitig den ADJUST-Schalter so lange, bis die gewünschte Temperatur in der Digitalanzeige angezeigt wird. Wenn die Temperatur eingestellt ist, lassen Sie den Display-Schalter los. Die Digitalanzeige zeigt dann die Temperatur der Kühlflüssigkeit im Reservoir an.

Flußsteuerung
Der RECIRCULATION FLOW CONTROL Hebel kontrolliert die Durchflußmenge der Kühlflüssigkeit zu Ihrer Anwendung. In der „+“-Stellung wird die gesamte verfügbare Kühlflüssigkeit an die Anwendung abgegeben, in der „-“-Stellung wird keine Kühlflüssigkeit an die Anwendung abgegeben.

WHX - Serie wassergekühlt Kurzbedienungsanleitung**Installation**
Stellen Sie das Gerät in einer sauberen Umgebung mit einfachem Zugang zu einem Gebäudewasseranschluß und einem Abfluß auf. Das Gebäudewasser muß den in der Anleitung festgelegten Anforderungen genügen, sonst wird die Leistung des Gerätes herabgesetzt. Unzureichende Wasserzufuhr kann zu einer Überhitzung des Kompressors und so zu einem Ausfall des Gerätes führen.

Vergewissern Sie sich, daß die Spannung Ihrer Stromanschlüsse mit der für das Gerät vorgesehenen Spannung übereinstimmt (± 10%).

Die Schlauchanschlüsse des Gerätes befinden sich an der Rückseite und sind mit TAP WATER, DRAIN, SUPPLY und RETURN bezeichnet. Bitte entfernen Sie die Gummiabdichtung von allen Anschlüssen. Schließen Sie den TAP WATER-Anschluß an das Gebäudewasser und den DRAIN-Anschluß an den Abfluß an. Schließen Sie den SUPPLY-Anschluß an den Eingang Ihres Instruments und den RETURN-Anschluß an den Ausgang Ihres Instruments an.

Um das Reservoir zu füllen, öffnen Sie die Abdeckplatte in der linken hinteren Ecke der Gehäuseoberseite und entfernen Sie die Reservoirabdeckung, indem Sie die Flügelschrauben lösen. Füllen Sie das Reservoir bis 1 Zoll unterhalb des Randes mit sauberer Kühlflüssigkeit. Wenn das zu kühlende Instrument und die Zirkulationsleitungen sehr viel Kühlflüssigkeit aufnehmen können, sollten Sie zusätzliche Kühlflüssigkeit zur Hand haben, um gegebenenfalls nachfüllen zu können.

Für den Betrieb im Arbeits-Temperaturbereich von +8°C bis +80°C empfiehlt NESLAB Leitungswasser als Kühlmittel, bei niedrigeren Temperaturen als +8°C muß eine nicht gefrierende Flüssigkeit verwendet werden. Wir empfehlen eine Mischung aus Leitungswasser und Labor Ethylen Glykol.

HX - Serie wassergekühlt Kurzbedienungsanleitung

Installation
Stellen Sie das Gerät in einer sauberen Umgebung mit einfachem Zugang zu einem Gebäudewasseranschluß und einem Abfluß auf. Das Gebäudewasser muß den in der Anleitung festgelegten Anforderungen genügen, sonst wird die Leistung des Gerätes herabgesetzt. Unzureichende Wasserzufuhr kann zu einer Überhitzung des Kompressors und so zu einem Ausfall des Gerätes führen.

Vergewissern Sie sich, daß die Spannung Ihrer Stromanschlüsse mit der für das Gerät vorgesehenen Spannung übereinstimmt (±10%).

Die Schlauchanschlüsse des Gerätes befinden sich an der Rückseite und sind mit TAP WATER, DRAIN, SUPPLY und RETURN bezeichnet. Bitte entfernen Sie die Gummiabdichtung von allen Anschlüssen. Schließen Sie den TAP WATER-Anschluß an das Gebäudewasser und den DRAIN-Anschluß an den Abfluß an. Schließen Sie den SUPPLY-Anschluß an den Eingang Ihres Instruments und den RETURN-Anschluß an den Ausgang Ihres Instruments an.

Um das Reservoir zu füllen, öffnen Sie die Abdeckplatte in der linken hinteren Ecke der Gehäuseoberseite und entfernen Sie die Reservoirabdeckung, indem Sie die Flügelschrauben lösen. Füllen Sie das Reservoir bis 1 Zoll unterhalb des Randes mit sauberer Kühlflüssigkeit. Wenn das zu kühlende Instrument und die Zirkulationsleitungen sehr viel Kühlflüssigkeit aufnehmen können, sollten Sie zusätzliche Kühlflüssigkeit zur Hand haben, um gegebenenfalls nachfüllen zu können.

Für den Betrieb im Arbeits-Temperaturbereich von +8°C bis +80°C empfiehlt NESLAB Leitungswasser als Kühlmittel, bei niedrigeren Temperaturen als +8°C muß eine nicht gefrierende Flüssigkeit verwendet werden. Wir empfehlen eine Mischung aus Leitungswasser und Labor Ethylen Glykol.

Inbetriebnahme
Vor Inbetriebnahme des Gerätes vergewissern Sie sich bitte, daß die elektrischen Anschlüsse und die Rohr- u. Schlauchanschlüsse sachgemäß installiert sind und daß das gesamte System mit Kühlflüssigkeit gefüllt ist.

Die Modelle HX-200 bis HX-750 müssen vor dem Starten mindestens 12 Stunden an die Stromversorgung angeschlossen werden, damit das Öl im Kompressor erwärmt werden kann und sich von der Kühlflüssigkeit abscheiden kann.

Um das Gerät einzuschalten, müssen Sie den Hauptschalter auf „ON“ stellen. Die „COOL“- und „IDLE“-Anzeigen auf der Steuertafel geben den Status des Kühlsystems an. Die COOL-Anzeige leuchtet, wenn das Kühlsystem der Kühlflüssigkeit Wärme entzieht. Die HEAT-Anzeige leuchtet, wenn sich das Gerät im Hot Gas Bypass Modus befindet.Wenn die Temperatur der Kühlflüssigkeit sich der gewünschten Temperatur nähert, blinken die Anzeigen, um den Arbeitszyklus des Systems anzugeben.

Nach dem Ausschalten des Gerätes sollten Sie vor dem Wiedereinschalten ca. 5 Minuten warten, damit das Kühlsystem einen Druckausgleich durchführen kann. Beachtet man diese Wartezeit nicht, kommt es zu kurzen Schaltfrequenzen des Kompressors und eine Kühlung ist nicht möglich.

Einstellung der Analog-Temperatursteuerung
Um die Temperatur einzustellen (setpoint), drehen Sie den °C-Schalter an der Vorderseite des Gerätes auf die gewünschte Temperatur.

Einstellung der Digital-Temperatursteuerung
Um sich den Temperatur-Setpoint anzeigen zu lassen, drücken Sie den DISPLAY-Schalter und halten Sie ihn gedrückt. Um den Temperatur-Setpoint einzustellen, drücken Sie den Display-Schalter, halten diesen, und drehen gleichzeitig den ADJUST-Schalter so lange, bis die gewünschte Temperatur in der Digitalanzeige angezeigt wird. Wenn die Temperatur eingestellt ist, lassen Sie den Display-Schalter los. Die Digitalanzeige zeigt dann die Temperatur der Kühlflüssigkeit im Reservoir an.

Flußsteuerung
Der RECIRCULATION FLOW CONTROL Hebel kontrolliert die Durchflußmenge der Kühlflüssigkeit zu Ihrer Anwendung. In der „+“-Stellung wird die gesamte verfügbare Kühlflüssigkeit an die Anwendung abgegeben, in der „-“-Stellung wird keine Kühlflüssigkeit an die Anwendung abgegeben.

Wartung
Überprüfen Sie regelmäßig die Kühlflüssigkeit im Reservoir. Sollte eine Säuberung notwendig sein, spülen Sie das Reservoir mit einer speziellen Reinigungsflüssigkeit, die mit dem Umlaufsystem und der Kühlflüssigkeit kompatibel ist.

Das Kühlmittel sollten Sie regelmäßig erneuern. Wenn Sie das Gerät bei niedrigen Temperaturen betreiben, erhöht sich mit der Zeit der Wasseranteil in der Kühlflüssigkeit. Dies führt zum Verlust von Kühlkapazität.

Regelmäßiges Absaugen des Kondensor-Heizkörpers ist erforderlich. Die Reinigungshäufigkeit hängt von der Betriebsumgebung ab. Eine monatliche Überprüfung des Kondensors ist empfehlenswert. So werden Sie nach einigen Monaten einen Reinigungsrhythmus gefunden haben.

Geräte mit PD- und TU-Pumpen sind mit einem Pumpenfilter ausgestattet. Der Filter sorgt dafür, daß kleine Teilchen und Schmutzablagerungen nicht in die Pumpe gelangen und so die Pumpflügel beschädigen können.

Nach der Erstinstallation kann es zu einer Blockierung des Filters kommen. Die erste Reinigung sollte daher nach einer Woche erfolgen. Danach empfehlen wir eine monatliche Überprüfung des Filters. So können Sie nach einiger Zeit abschätzen, wie oft der Filter gereinigt werden muß.

Bevor Sie den Filter reinigen, ziehen Sie den Netzstecker aus der Steckdose und leeren Sie das Reservoir.

Luftkølet HX-serie Kvik referance.

Installation:
Opstilles i rene omgivelser.

Steder med meget støv skal undgåes, og periodisk rensning skal udføres, hvis utilsigtet nedbrud skal undgåes. Opbygning af støv vil medføre fald i kølekapasiteten og i værste fald overophedning af systemet.

Check at netspændingen er den nominelle 240V ± max. 10%.

Slangetilgang er på bagsiden mærket „Supply“ til indgang på dit emne og „Return“ på udgangen.

Ledningsvand (ionbyttet) kan anvendes mellem +8 til 80^0 C, under $+8^0$ C skal væsken blandes op med ethylenglycol.

Fyldning af reservoiret foregår ved at fjerne panelet, som er forsynet med fingerskruer, og påfyld egnet rent kølevæske, max 5 cm fra toppen

Betjening:
Før opstart checkes elektriske forbindelser, slangeforbindelser, væske stand og brugsvand er tilsluttet.

Analog temperatur kontrol:
Drej på knappen mærket C til den rigtige temperatur.

Digital temperatur kontrol:
Setpunktet vises ved at holde „Display“ tasten inde, skal temperaturen ændres drejes herefter på „Adjust“ knappen. Slip „Display“ knappen og aktuel temperatur vises.

Flow kontrol:
Drej på „RECIRCULATING FLOW CONTROL“ + for at åbne og - for at lukke.

Periodisk vedligeholdelse:
Check standen af væske periodisk. Check med mellemrum vakuumet på pumpesiden, rens systemet og check for aflejringer, vækst, utætheder, check vakuumpumpen med kondenser og evt. filtre. Husk åben aldrig instrumentet uden strømmen er afbrudt, og strømkablet er taget ud!

Vandkølet HX-serie Kvik referance.

Installation:
Opstilles i rene omgivelser

Steder med meget støv skal undgås og periodisk rensning skal udføres, hvis utilsigtet nedbrud skal undgås. Opbygning af støv vil medføre fald i kølekapasiteten og i værdste fald overophedning af systemet.

Check at netspændingen er den nominelle 240V ± max. 10%.

Slangetilgang er på bagsiden mærket „TAP WATER“ (hanevand) og „DRAIN“ (ud), samt „Supply“ og „Return“. Inden tilslutning af fittings fjernes plaststøvkappen fra rørstudsene. „TAP WATER“ tilsluttes ledningsvand og „DRAIN“ til afløb. Tilslut dernæst „Supply“ til indgang på dit emne og „Return“ på udgangen.

Ledningsvand (ionbyttet) kan anvendes mellem +8 til 80 deg. C, under +8 deg C skal væsken blandes op med ethylenglycol.

Fyldning af reservoiret foregård ved at fjerne panelet, som er forsynet med fingerskruer og påfyld egnet rent kølevæske, max 5 cm fra toppen

Betjening:
Før opstart chekes elektriske forbindelser, slangeforbindelser, væske stand og brugsvand er tilsluttet.

Analog temperatur kontrol:
Drej på knappen mærket C til den rigtige temperatur.

Digital temperatur kontrol:
Setpunktet vises ved at holde „Display“ tasten inde, skal temperaturen ændres drejes herefter på „Adjust“ knappen. Slip „Display“ knappen og aktuel temperatur vises.

Flow kontrol:
Drej på „RECIRCULATING FLOW CONTROL“ + for at åbne og - for at lukke.

Periodisk vedligeholdelse:
Check standen af væske periodisk. Check med mellemrum vacuummet på pumpesiden, rens systemet og check for aflejringer, vækst, utætheder, check vacuumpumpen med kondenser og evt. filtre. Husk åbn aldrig instrumentet uden strømmen er afbrudt og strømkablet er taget ud!

Watergekoelde HX Series, Handleiding voor snelle installatie-procedures

Installatie
Plaats het apparaat in een ruimte waar gebouwenwater en de mogelijkheid tot afvoer daarvan binnen handbereik zijn. De eisen van de waterfaciliteiten moeten overeenkomen met die gespecificeerd in de handleiding, anders zal het apparaat onvoldoende prestaties leveren. Onvoldoende watertoevoer kan ertoe leiden dat de compressor oververhit raakt en het apparaat uitgeschakeld wordt.

Let erop dat de netspanning gelijk is aan ht aangegeven voltage, ±10%.

De slangaansluitingen zijn bevestigd aan de achterkant van het apparaat en zijn voorzien van de labels TAPWATER, DRAIN, SUPPLY en RETURN. Verwijder de plastic beschermingspluggen van alle slangaansluitingen. De TAPWATER plug dient aangesloten te worden aan de watertoevoer en de DRAIN plug dient te worden aangesloten aan de afvoer. Bevestig de SUPPLY plug aan de ingang van uw applicatie en bevestig de RETURN plug aan de uitgang van uw applicatie.

Om het reservoir te vullen dient men het toegangspaneel aan de linkerachterkant te openen en het reservoir door middel van het losdraaien van de duimschroeven te verwijderen. Vul nu het reservoir tot maximaal 1 inch aan de bovenkant.Indien de vloeistof level van uw toepassingen en de toe- en afvoer leidingen voldoende zijn, dient u altijd extra vloeistof achter de hand te houden.

Kraanwater is aan te bevelen bij een arbeidsproces van 8C. tot +80C. Beneden de +8°C. dient men een non-freezing vloeistof te gebruiken. Een combinatie van kraanwater en laboratorium gerichte ehtylene glycol wordt in het algemeen aanbevolen.

Operationeel gebruik
Alvorens het apparaat te starten, dient men de elektrische- en slangaansluitingen te controleren. Controleer tevens of het systeem gevuld is met koelvloeistof.

De modellen HX-200 tot HX-750 dienen 12 uur aangesloten te zijn aan de netspanning, zodat de olie verhit kan worden en gescheiden kan worden van de koelvloeistof.

Om het apparaat te starten moet men de schakelaar op “ON” zetten. De “Cool” en “Idle LEDs” aan de voorkant van het apparaat geven de status van het koelsysteem weer. “Cool” is in werking wanneer het apparaat warmte van de koelvloeistof onttrekt, “Heat” is in werking wanneer het apparaat in de Hot Gas Bypass stand is gesteld. Indien de ingegeven temperatuur bereikt is, zal de LED switchen.

Wanneer het apparaat uitgeschakeld is, gelieve 5 minuten te wachten alvorens u het apparaat weer in werking stelt. Deze tijd is nodig voor de drukken in het koelsysteem. Indien dit niet gebeurt, zal er short-cycle optreden binnen de compressor en er vindt geen koeling plaats.

Analog ControllerTemperature Adjustment
Om de temperatuur set-point aan te passen, gelieve de Gr.C. knop aan de voorkant van het apparaat te draaien naar de gewenste temperatuur.

Digital ControllerTemperature Adjustment
Om de temperatuur set-point aan te duiden, houdt u de “DISPLAY” knop ingedrukt. Om de temperatuur set-point aan te passen, houdt u de “DISPLAY” knop ingedrukt en draait u de “ADJUST” knop totdat de gewenste temperatuur set-point af te lezen is van de display. Als de set-point is aangepast, kunt u de “DISPLAY” knop loslaten. De display zal nu de temperatuur weergeven van de vloeistof in het reservoir.

Flow Control
Met de RECIRCULATING FLOW CONTROL kunt u het debiet van uw applicatie regelen. De “+” positie geeft u een volledig debiet weergegeven, de “-” positie geeft geen debiet.

Periodiek Onderhoud
De vloeistof in het reservoir dient regelmatig gecontroleerd te worden. Indien reiniging noodzakelijk is, zal het reservoir schoongespoeld moeten worden met een vloeistof welke gelijk is aan het circulatiesysteem en de koelvloeistof..

De koelvloeistof dient periodiek vervangen te worden. Wanneer u werkt met lage temperaturen, zal de concentratie van het water in de koelvloeistof gedurende die tijd toenemen, wat verlies van koelcapaciteit tot gevolg kan hebben.

Het periodiek luchtvrij maken van de condensor is noodzakelijk. Het aantal malen dat dit moet gebeuren hangt af van de omgeving waar het apparaat staat opgesteld en tevens gebruikt wordt. Wij raden een algemene maandelijkse inspektie van de condensor aan na de installatie. Na enkele maanden zal duidelijk zij hoe vaak men de condensor moet reinigen.

Apparaten met PD en TU pompen hebben een afvoer. Indien vuil aanwezig is in het systeem, zal de afvoer ervoor zorgen dat het materiaal niet in de pomp terecht komt en daardoor de pompleidingen niet beschadigd.

Nadat het apparaat geinstalleerd is, zou de afvoer verstopt kunnen raken. De afvoer zal in de eerste week na de installatie schoongemaakt moeten worden. Nadien is een maandelijkse inspektie aan te raden. Na enkele maanden zal duidelijk zijn hoe vaak men de afvoer moet reinigen.

Alvorens de afvoer te reinigen, gelieve het apparaat uit te schakelen en het reservoir te ledigen.

Luchtgekoelde HX Series, Handleiding voor snelle installatie-procedures

Installatie
Plaats het apparaat op een dusdanige manier dat luchttoevoer en afvoer niet wordt belemmerd. Inadequate ventilatie kan leiden tot afname van koelcapaciteit en, in extreme gevallen, tot het niet functioneren van de compressor.

Het is aan te raden stoffige ruimtes te vermijden en de condensor regelmatig schoon te houden.

Voor een juiste werking moet het apparaat een voldoende hoeveelheid lucht aanzuigen door middel van een condensor. Een opeenhoping van stof en vuil op de condensor kan leiden tot een verlies van koelcapaciteit.

Het apparaat behoudt haar integrale capaciteit bij een omgevingstemperatuur tot ongeveer +24°C.

Let erop dat de netspanning gelijk is aan het aangegeven voltage, ±10%.

De slangaansluitingen zijn bevestigd aan de achterkant van het apparaat en zijn voorzien van het label SUPPLY en RETURN. Deze aansluitingen zijn 3/4 inch FPT. Verwijder de plastic beschermingspluggen van beide slangaansluitingen. Bevestig de SUPPLY plug met de ingang van het apparaat welke gekoeld wordt. Bevestig de RETURN plug aan de uitgang van van uw applicatie.

Om het reservoir te vullen, gelieve het toegangspaneel te verwijderen door middel van het losdraaien van de duimschroeven. Vul nu het reservoir tot 2 inches van het maximum wanneer het apparaat de gewenste temperatuur heeft bereikt. Indien het vloeistof level van uw toepassingen de toe-afvoer leidingen voldoende zijn.

Kraanwater wordt in het algemeen aanbevolen, indien men werkt met temperaturen van +8°C tot +80°C.

Beneden de +8°C. moet een non-freezing vloeistof gebruikt worden. Een combinatie van kraanwater en ethylene glycol wordt aanbevolen.

Operationeel gebruik
Alvorens het apparaat in gebruik te nemen, gelieve eerst alle elektrische- en slangaansluitingen te controleren. Controleer ook of het systeem gevuld is met koelvloeistof.

De modellen HX-200 tot HX-750 dienen 12 uur aangesloten te zijn aan de netspanning, zodat de olie verhit en gescheiden kan worden van de koelvloeistof.

Om het apparaat te starten moet men de schakelaar op “ON” zetten. De “Cool” en “Idle LEDs” aan de voorkant van het apparaat duiden de status van het koelsysteem aan. “Cool” is in werking wanneer het apparaat warmte van de koelvloeistof ontlucht, “Heat” is in werking wanneer het apparaat in de Hot Gass Bypass stand is gesteld. Indien de ingegeven temperatuur bereikt is, zal de LED switchen.

Wanneer het apparaat uitgeschakeld is, gelieve 5 minuten te wachten alvorens u het apparaat weer in werking stelt. Deze tijd is nodig om de drukken in het koelsysteem. Indien dit niet gebeurt, zal er short-cycle binnen de compressor optreden en er vindt geen koeling plaats.

Analog ControllerTemperature Adjustment
Om de temperatuur set-point aan te passen, gelieve de Gr.C. knop aan de voorkant van het apparaat te draaien naar de gewenste temperatuur.

Digital ControllerTemperature Adjustment
Om de temperatuur set-point aan te duiden, houdt u de “DISPLAY” knop ingedrukt. Om de temperatuur set-point aan te passen, houdt u de “DISPLAY” knop ingedrukt en draait u de “AD-JUST” knop totdat de gewenste temperatuur set-point af te lezen is van de display. Als de set-point is aangepast, kunt u de “DISPLAY” knop loslaten. De display zal nu de temperatuur weergeven van de vloeistof in het reservoir.

Flow Control
Met de RECIRCULATING FLOW CONTROL kunt u het debiet van uw applicatie regelen. De “+” positie geeft u een volledig debiet, de “-” positie geeft geen debiet.

Periodiek Onderhoud
De vloeistof in het reservoir dient regelmatig gecontroleerd te worden. Indien reiniging noodzakelijk is, zal het reservoir schoongespoeld moeten worden met een vloeistof, welke gelijk is aan het circulatiesysteem en de koelvloeistof.

De koelvloeistof dient perdiodiek vervangen te worden. Wanneer u werkt met lage temperaturen, zal de concentratie van het water in de koelvloeistof gedurende die tijd toenemen, wat verlies van koelcapaciteit tot gevolg kan hebben.

Periodiek luchtvrij maken van de condensor is noodzakelijk. Het aantal malen dat dit moet gebeuren hangt af van de omgeving waar het apparaat staat opgesteld en gebruikt wordt. Wij raden een algemene maandelijkse inspektie van de condensor na de installatie aan. Na enkele maanden zal duidelijk zijn hoe vaak men het apparaat moet reinigen.

Apparaten met PD en TU pompen hebben een afvoer. Indien vuil aanwezig is in het systeem, zal de afvoer ervoor zorgen dat het materiaal niet in de pomp terecht komt en daardoor de pompleidingen niet beschadigd.

Nadat het apparaat geinstalleerd is, zou de afvoer verstopt kunnen raken. De afvoer zal in de eerste week na de installatie schoongemaakt moeten worden. Nadat dit gebeurd is, is een maandelijkse inspektie aan te raden. Na enkele maanden zal duidelijk zijn hoe vaak men de afvoer moet reinigen.

Alvorens de afvoer te reinigen, gelieve het apparaat uit te schakelen en het reservoir te ledigen.

Kortfattad Bruksanvisning för Vattenkyld HX-serie

Installation
Ställ maskinen i en ren miljö med lätt tillgång till kylningsvatten och ett vattenavlopp. Kylningsvattnet måste möta de krav som är specifierade i instruktionerna annars minskas maskinens prestations förmåga.

Försäkra att spänningen är den samma som den som är given i instruktionerna ±10%.

Röranslutningarna finns på baksidan av maskinen och är märkta "TAP WATER, DRAIN SUPPLY/ RETURN". Ta bort de skyddande plast bitarna. Anslut "TAP WATER" inpassningen till byggnads vattnet och "DRAIN" inpassningen till avloppet. Anslut "SUPPLY" inpassningen till insläppet av din anordning och "RETURN" inpassningen till utsläppet av din anordning.

För att fylla tanken, öppna luckan på den bakre vänstra delen av toppen på maskinen och lösgör skruvarna som håller den undre luckan på plats. Fyll tanken tills 2,5 cm återstår. Var beredd att fylla på om din anordning kräver extra vätska.

Vanligt kran vatten är den rekommenderade vätskan vid en temperatur mellan +8°C och +80°C. Under +8°C måste en vätska som inte fryser användas. En blandning av vanligt vatten och etylenglykol (laboratorie kvalitet) föreslås.

Användning
Innan maskinen startas, kontrollera alla elektriska och alla rör anslutningar. Se till att cirkulations systemen har fyllts med vätska.

Var säker på att byggnads vattnet är påsatt.

På alla modeller från HX-200 till HX-750 måste maskinen vara kopplad till energikällan minst 12 timmar innan användning så att oljan tillåts att värmas upp och separera från köldmedlet.

Sätt start knappen på ON för att starta maskinen. COOL och IDLE på framsidan visar statusen på kylningssystemet. Cool lyser när värme tas bort från köldmedlet. Heat är på när "the hot gas bypass mode" används. När temperaturen närmar sig den förbestämda önskade temperaturen kommer de två att växla.

Vänta 5 minuter innan maskinen sätts på igen efter att ha varit avstängd för att låta kylningstrycken att utjämnas. Ingen kylning kommer att utföras om inte trycken tillåts att utjämnas.

Analog Kontroll, Temperatur Ändring
För att ändra den önskade förbestämda temperaturen, vrid °C knappen på framsidan av maskinen tills den önskade temperaturen är nådd.

Digital Kontroll, Temperatur Ändring
Håll Display knappen intryckt för att visa den önskade temperaturen. Håll Display knappen intryckt och vrid Adjust knappen för att ändra den önskade temperaturen. Släpp Display knappen efter att den önskade temperaturen visas på kontroll panelen. Temperaturen på vätskan i tanken visas nu på kontroll panelen.

Flödeskontroll
"RECIRCULATING FLOW CONTROL" handtaget kontrollerar flödet till din anordning. i "+" positionen får man fullt flöde, "-" positionen innebär inget flöde.

Periodiskt Underhåll
Inspektera vätskan i tanken periodiskt. Om rengöring är nödvändigt, spola tanken med en rengörings vätska som är förenlig med cirkulationssystemet och kylvätskan.

Kylvätskan bör bytas periodvis. När enheten används vid låga temperaturer kommer vätskans koncentration av vatten att öka vilket leder till en minskad kylningskapacitet.

Periodisk rengöring av kondensorn är nödvändig. Hur ofta rengöring är nödvändig beror på miljön. Vi rekommenderar en visuell inspektion av kondensorn varje månad efter installation. Efter flera månader kan det avgöras hur ofta kondensorn måste rengöras i framtiden.

Maskiner med PD och TU pumpar har ett filter. Filtret måste rengöras efter en veckas användning. Efter första rengöringen bör filtret inspekteras varje månad. Efter flera månader kan det avgöras hur ofta filtret måsta rengöras.

Drag ur kontakten och töm tanken innan filtret rengörs.

Kortfattad Bruksanvisning för Luft Kyld HX-serie

Installation
Ställ maskinen så att luft intaget och uttaget inte är blockerade. Otillräcklig ventilation leder till minskad kylningskapacitet och vid vissa tillfällen kan kompressorn gå sönder.

Undvik dammiga områden och rengör maskinen periodvis. För att fungera ordentligt måste mycket luft passera genom kondensorn. Damm och smuts i kondensorn leder till minskad kylnings kapacitet.

Maskinen har full kylningskapacitet upp till en temperatur av +75°F (24°C).

Försäkra att spänningen är den samma som den som är given i instruktionerna ±10%.

För att fylla tanken, öppna luckan på den bakre vänstra delen av toppen på maskinen och lösgör skruvarna som håller den undre luckan på plats. Fyll tanken tills 2,5 cm återstår. Var beredd att fylla på om din anordning kräver extra vätska.

Innan maskinen startas, kontrollera alla elektriska och alla rör anslutningar. Se till att cirkulations systemen har fyllts med vätska.

Användning
Innan maskinen startas, kontrollera alla elektriska och alla rör anslutningar. Se till att cirkulations systemen har fyllts med vätska.

Var säker på att byggnads vattnet är påsatt.

På alla modeller från HX-200 till HX-750 måste maskinen vara kopplad till energikällan minst 12 timmar innan användning så att oljan tillåts att värmas upp och separera från köldmedlet.

Sätt start knappen på ON för att starta maskinen. COOL och IDLE på framsidan visar statusen på kylningssystemet. Cool lyser när värme tas bort från köldmedlet. Heat är på när “the hot gas bypass mode” används. När temperaturen närmar sig den förbestämda temperaturen kommer de två att växla.

Vänta 5 minuter after att maskinen stängts av innan den sätts på igen för att låta kylningstrycken att utjämnas. Ingen kylning kommer att utföras om inte trycken tillåts att utjämnas.

Analog Kontroll, Temperatur Ändring
För att ändra den önskade förbestämda temperaturen, vrid °C knappen på framsidan av maskinen tills den önskade temperaturen är nådd.

Digital Kontroll, Temperatur Ändring
Håll Display knappen intryckt för att visa den önskade temperaturen. Håll Display knappen intryckt och vrid Adjust knappen för att ändra den önskade temperaturen. Släpp Display knappen efter att den önskade temperaturen visas på kontroll panelen. Temperaturen på vätskan i tanken visas nu på kontroll panelen.

Flödeskontroll
“RECIRCULATING FLOW CONTROL” handtaget kontrollerar flödet till din anordning. i “+” positionen får man fullt flöde, “-” positionen innebär inget flöde.

Periodiskt Underhåll
Inspektera vätskan i tanken periodiskt. Om rengöring är nödvändigt, spola tanken med en rengörings vätska som är förenlig med cirkulationssystemet och kylvätskan.

Kylvätskan bör bytas periodvis. När enheten används vid låga temperaturer kommer vätskans koncentration av vatten att öka vilket leder till en minskad kylningskapacitet.

Periodisk rengöring av kondensorn är nödvändig. Hur ofta rengöring är nödvändig beror på miljön. Vi rekommenderar en visuell inspektion av kondensorn varje månad efter installation. Efter flera månader kan det avgöras hur ofta kondensorn måste rengöras i framtiden.

Maskiner med PD och TU pumpar har ett filter. Filtret måste rengöras efter en veckas användning. Efter första rengöringen bör filtret inspekteras varje månad. Efter flera månader kan det avgöras hur ofta filtret måsta rengöras.

Innan filtret rengörs, drag ur kontakten och töm tanken.

NOTICE D'UTILISATION
REFROIDISSEURS TYPE HX VERSION *AIR*

NINSTALLATION
Ces appareils ont un système de réfrigération refroidi par air. L'air est aspiré sur le devant et rejeté à l'arrière et sur les côtés

Positionner l'appareil afin que l'admission et l'émission ne soient pas obstruées. Une ventilation insuffisante serait la cause d'une réduction de la capacité de refroidissement, voire, d'une défaillance du compresseur.

Dans une zone excessivement poussièreuse, le nettoyage périodique est recommandé. En mode de fonctionnement, l'appareil aspire de l'air à travers le condenseur. De la poussière et des particules sur la grille atténueraient sa capacité de refroidissement.

L'appareil conserve sa pleine puissance de refroidissement sur une plage de température allant de l'ambiante à + 24°C.

S'assurer que l'alimentation électrique soit celle requise à ±10%.

Les connections, d'un diamètre 0.75 pouce FPT, sont situées à l'arrière de l'appareil et sont référencées " SUPPLY " et " RETURN ".. Retirer les embouts plastiques. Connecter le tuyau enfiché sur " SUPPLY " vers l'entrée de l'équipement et celui sur " RETURN " vers la sortie.

Pour remplir le réservoir, ôter la tape à l'aide des deux vis. Dévisser le bouchon et remplir le réservoir avec un liquide approprié. L'eau du robinet est recommandée pour un fonctionnement entre + 8 °C et + 30°C; à une température inférieure, mieux vaut rajouter du glycol-éthylène.

MISE EN ROUTE
Vérifier les connections électriques, les tuyaux d'eau et le niveau de remplissage du liquide. Sur les modèles HX 200 à HX 750, il faut alimenter l'appareil 12 heures avant pour chauffer et séparer l'huile du refrigérant.

Mettre en route en appuyant sur " ON ". Un voyant s'allume qui indique que l'appareil est en fonctionnement. Pour l'éteindre, appuyer sur " OFF ".

Les voyants LED " Cool " et " IDLE " indiquent le mode de fonctionnement du système de réfrigération. " Cool " est allumé quand l'appareil évacue la chaleur du fluide, " HEAT " est allumé quand l'appareil est en mode de " By-pass ". Quand la température obtenue approche de la température souhaitée, le voyant s'allume et s'éteint.

Après avoir éteint l'appareil, attendre environ cinq minutes avant de le rallumer, pour un bon équilibrage des pressions.Autrement, le cycle au niveau du compresseur serait trop bref et le refroidissement n'aurait pas lieu.

REGLAGE DU CONTROLEUR DE TEMPERATURE ANALOGIQUE
Tourner le potentiomètre situé à l'avant jusqu'à ce que la température désirée coïncide avec la graduation.

REGLAGE DU CONTROLEUR DE TEMPERATURE NUMERIQUE
Pour afficher la température souhaitée, maintenir appuyé l'interrupteur et tourner le bouton de réglage jusqu'à ce que la température souhaitée soit affichée. Relâcher ensuite l'interrupteur. L'affichage indique alors la température du fluide dans le réservoir.

CONTROLEUR DE DEBIT
La poignée " Recirculating Flow conrol " règle le débit de recirculation. En position " + ", votre application reçoit un débit maximum; en position " - ", il n'y a plus de débit.

MAINTENANCE PREVENTIVE
Vérifier régulièrement le niveau du réservoir,

Changer de temps à autre le liquide utilisé,

En cas de nettoyage, rincer avec un produit de lavage compatible,

Aux basses températures, la concentration en eau a tendance à augmenter ce qui peut générer une perte de puissance de refroidissement,

Avant de changer de liquide, recirculer à une température plus élevée pour réchauffer le serpentin,

Nettoyer régulièrement selon les conditions de travail la grille d'aspiration. Nous recommandons d'effectuer la première inspection du condenseur un mois après l'installation,

Les modèles fonctionnant avec des pompes type PD ou TU sont équipés d'un filtre qui retient les impuretés. Il est recommandé de nettoyer ce filtre après la première semaine et, ensuite, une fois par mois. Ce nettoyage s'effectue après avoir débranché l'appareil et vidangé le réservoir

NOTICE D'UTILISATION
REFROIDISSEURS TYPE HX VERSION EAU

INSTALLATION
Installer l'appareil dans un environnement propre avec un accès facile à une arrivée d'eau. Cette source d'eau doit correspondre à ce qui est spécifié dans la notice pour ne pas altérer les performances de l'équipement. Une source non conforme pourrait causer une surchauffe du compresseur et un arrêt de l'appareil.

S'assurer que la tension électrique soit celle requise à ±10 %.

Les connections sont situées à l'arrière et référencées :
" TAP WATER "
" DRAIN "
" SUPPLY "
" RETURN "

Retirer les embouts plastique. Connecter le " Tap water " vers l'arrivée d'eau ; le " Drain " au robinet; " Supply " vers l'entrée de votre application et le " Return " à la sortie.

Utiliser un fluide antigel dont la viscosité doit être inférieure à 50 centistokes à la température la plus basse.

Pour remplir le réservoir, ouvrir la tape en haut à gauche et retirer le couvercle en dévissant. Remplir jusqu'à 1 " pouce " du sommet (niveau). Si le volume total à refroidir est important, il convient d'avoir une réserve de fluide immédiatement disponible sous la main pour ne pas désamorcer la pompe.

MISE EN ROUTE
Vérifier les connections électriques, les tuyaux d'eau et le niveau de remplissage du liquide. Sur les modèles HX 200 à HX 750, il faut alimenter l'appareil 12 heures avant pour chauffer et séparer l'huile du refrigérant.

Mettre en route en appuyant sur " ON ". Un voyant s'allume qui indique que l'appareil est en fonctionnement. Pour l'éteindre, appuyer sur " OFF ".

Les voyants LED " Cool " et " IDLE " indiquent le mode de fonctionnement du système de réfrigération. " Cool " est allumé quand l'appareil évacue la chaleur du fluide, " HEAT " est allumé quand l'appareil est en mode de " By-pass ". Quand la température obtenue approche de la température souhaitée, le voyant s'allume et s'éteint.

Après avoir éteint l'appareil, attendre environ cinq minutes avant de le rallumer, pour un bon équilibrage des pressions.Autrement, le cycle au niveau du compresseur serait trop bref et le refroidissement n'aurait pas lieu.

REGLAGE DU CONTROLEUR DE TEMPERATURE ANALOGIQUE
Tourner le potentiomètre situé à l'avant jusqu'à ce que la température désirée coïncide avec la graduation.

REGLAGE DU CONTROLEUR DE TEMPERATURE NUMERIQUE
Pour afficher la température souhaitée, maintenir appuyé l'interrupteur et tourner le bouton de réglage jusqu'à ce que la température souhaitée soit affichée. Relâcher ensuite l'interrupteur. L'affichage indique alors la température du fluide dans le réservoir.

CONTROLEUR DE DEBIT
La poignée " Recirculating flow control " règle le débit de recirculation. En position " + ", votre application reçoit un débit maximum; en position " - ", il n'y a plus de débit.

MAINTENANCE PREVENTIVE
Changer de temps à autre le liquide utilisé,

Aux basses températures, la concentration en eau a tendance à augmenter ce qui peut générer une perte de puissance de refroidissement,

Avant de changer de liquide, recirculer à une température plus élevée pour réchauffer le serpentin,

Nettoyer régulièrement selon les conditions de travail la grille d'aspiration. Nous recommandons d'effectuer la première inspection du condenseur un mois après l'installation,

Les modèles fonctionnant avec des pompes type PD ou TU sont équipés d'un filtre qui retient les impuretés. Il est recommandé de nettoyer ce filtre après la première semaine et, ensuite, une fois par mois. Ce nettoyage s'effectue après avoir débranché l'appareil et vidangé le réservoir

PROCEDIMIENTOS DE OPERACION DE REFERENCIA RAPIDA PARA LA SERIE HX REFRIGERADA POR AGUA

INSTALACION
Sitúe la unidad en un entorno limpio con fácil acceso a la instalación de agua de enfriamiento y un desagüe. Los requerimientos de la instalación de agua deben adaptarse a las especificadas en el manual de instrucciones o el funcionamiento de la unidad se verá mermado. Un suministro de agua inadecuado podría causar que el compresor se sobrecalentara y se apagara la unidad.

Asegúrese de que el voltaje de la fuente de energía sea igual que el voltaje especificado, ±10%.

Las conexiones de tuberías están situadas en la parte trasera de la unidad y están marcadas como TAP WATER, DRAIN, SUPPLY y RETURN. Saque los protectores de plástico de todas las conexiones de tuberías. Conecte el adaptador TAP WATER a la instalación de agua de enfriamiento y el adaptador DRAIN a un desagüe. Conecte el adaptador SUPPLY a la entrada de su aplicación y el adaptador RETURN a la salida de su aplicación.

Para llenar el reservorio, abra el panel de acceso situado en la esquina trasera izquierda del tope de la caja y saque la tapa del reservorio desatornillando los tornillos. Llene el reservorio hasta una pulgada del tope. Si la capacidad de fluido de su aplicación y las lineas de recirculación son significativas, tenga fluido extra a mano.

Se recomienda el agua corriente como fluido para operar desde +8 ºC hasta +80 ºC. Por debajo de +8 ºC, debe utilizarse un fluido no congelador. Sugerimos una mezcla de agua corriente y etileno glicol de grado laboratorio.

OPERACION
Antes de poner en marcha la unidad, compruebe todas las conexiones eléctricas y de tuberías. Asegúrese de que el sistema circulador se ha llenado con fluido refrigerante.

En los modelos HX-200 hasta HX-750, la unidad debe conectarse a la red de energía durante al menos 12 horas para permitir que el aceite se caliente y se separe del refrigerante.

Para poner en marcha la unidad, ponga el interruptor de encendido en posición ON. Los LED Cool y Idle del panel frontal indican la situación del sistema de refrigeración. Cool está en marcha cuando la unidad está eliminando calor del fluido de enfriamiento. Heat está en marcha cuando la unidad está en el modo by-pass gas caliente. A medida que la temperatura de funcionamiento se aproxima al punto fijado, el LED ciclará.

Cuando se apaga la unidad, espere aproximadamente cinco minutos antes de volver a ponerla en marcha para permitir que las presiones de refrigeración se ecualicen. Si no se permite ecualizarse las presiones, el compresor se cortocicuitará y no enfriará.

AJUSTE DE LA TEMPERATURA CON EL CONTROLADOR ANALOGICO
Para fijar el punto de ajuste de la temperatura, gire el dial ºC situado en el frontal de la unidad hasta la temperatura deseada.

AJUSTE DE LA TEMPERATURA CON EL CONTROLADOR DIGITAL
Para que el punto de ajuste de temperatura aparezca en pantalla, mantenga presionado el interruptor DISPLAY. Para fijar el punto de ajuste de temperatura, mantenga presionado el interruptor DISPLAY y gire el botón ADJUST hasta que la pantalla digital indique el punto de ajuste de temperatura deseado. Una vez fijado el punto de ajuste, suelte el interruptor DISPLAY. La pantalla indicará la temperatura del fluido en el reservorio.

CONTROL DE FLUJO
El mango RECIRCULATING FLOW CONTROL controla la escala de flujo a su aplicación. En la posición + recibirá flujo completo, en la posición - no hay flujo.

MANTENIMIENTO PERIODICO

Inspeccione periódicamente el fluido del reservorio. Si es necesaria una limpieza, rocíe el reservorio con un fluido de limpieza compatible con el sistema de circulación y el fluido refrigerante.

El fluido refrigerante debe sustituirse periódicamente. Cuando se funciona a baja temperatura, la concentración de agua en el fluido refrigerante aumentará con el tiempo, ocasionando una pérdida de capacidad refrigerante.

Es necesario un vaciado periódico de las aletas del condensador. La frecuencia de limpieza depende del entorno en que funciona el aparato. Recomendamos una inspección visual mensual del condensador después de la instalación inicial. Después de varios meses, quedará establecida la frecuencia de limpieza.

Las unidades con bombas PD y TU tienen un filtro. Si hay residuos en el sistema, el filtro prevendrá que el material entre en la bomba y dañe las paletas de la bomba.

Después de la instalación inicial, el filtro puede bloquearse. El filtro debe limpiarse después de la primera semana de la instalación. Después de esta primera limpieza, se recomienda una inspección visual mensual. Después de varios meses, se establecerá la frecuencia de limpieza.

Antes de limpiar el filtro, desenchufe el aparato y vacíe el reservorio.

PROCEDIMIENTOS DE OPERACION DE REFERENCIA RAPIDA PARA LA SERIE HX REFRIGERADA POR AIRE

INSTALACION

Sitúe la unidad para no impedir la entrada y descarga. Una ventilación inadecuada causará una reducción en la capacidad de enfriamiento y, en casos extremos, un fallo en el compresor.

Deben evitarse las zonas excesivamente polvorientas y debe instituirse un calendario de limpiezas periódicas. Para un funcionamiento adecuado, la unidad necesita empujar una cantidad sustancial de aire a través de un condensador. Un cúmulo de polvo o residuos en las aletas del condensador ocasionaría una pérdida de capacidad de enfriamiento.

La unidad retendrá su capacidad completa en temperaturas ambiente de hasta aproximadamente + 75 ºF.

Asegúrese de que el voltaje de la fuente de energía sea igual que el voltaje especificado, ±10%.

Las conexiones de tuberías están situadas en la parte trasera de la unidad y están marcadas como SUPPLY y RETURN. Estas conexiones son 3/4" FPT. Saque los protectores de plástico de ambas conexiones de tuberías. Conecte el adaptador SUPPLY en la entrada de su aplicación. Conecte el adaptador RETURN a la salida de su aplicación.

Para llenar el reservorio, abra el panel de acceso situado en la esquina trasera izquierda del tope de la caja y saque la tapa del reservorio desatornillando los tornillos. Llene el reservorio hasta una pulgada del tope. Si la capacidad de fluido de su aplicación y las lineas de recirculación son significativas, tenga fluido extra a mano.

Se recomienda el agua corriente como fluido para operar desde +8 ºC hasta +80 ºC. Por debajo de +8 ºC, debe utilizarse un fluido no congelador. Sugerimos una mezcla de agua corriente y etileno glicol de grado laboratorio.

OPERACION

Antes de poner en marcha la unidad, compruebe todas las conexiones eléctricas y de tuberías. Asegúrese de que el sistema circulador se ha llenado con fluido refrigerante.

En los modelos HX-200 hasta HX-750, la unidad debe conectarse a la red de energía durante al menos 12 horas para permitir que el aceite se caliente y se separe del refrigerante.

Para poner en marcha la unidad, ponga el interruptor de encendido en posición ON. Los LED Cool y Idle del panel frontal indican la situación del sistema de refrigeración. Cool está en marcha cuando la unidad está eliminando calor del fluido de enfriamiento. Heat está en marcha cuando la unidad está en el modo by-pass gas caliente. A medida que la temperatura de funcionamiento se aproxima al punto fijado, el LED ciclará.

Cuando se apaga la unidad, espere aproximadamente cinco minutos antes de volver a ponerla en marcha para permitir que las presiones de refrigeración se ecualicen. Si no se permite ecualizarse las presiones, el compresor se cortocicuitará y no enfriará.

AJUSTE DE LA TEMPERATURA CON EL CONTROLADOR ANALOGICO

Para fijar el punto de ajuste de la temperatura, gire el dial ºC situado en el frontal de la unidad hasta la temperatura deseada.

AJUSTE DE LA TEMPERATURA CON EL CONTROLADOR DIGITAL

Para que el punto de ajuste de temperatura aparezca en pantalla, mantenga presionado el interruptor DISPLAY. Para fijar el punto de ajuste de temperatura, mantenga presionado el interruptor DISPLAY y gire el botón ADJUST hasta que la pantalla digital indique el punto de ajuste de temperatura deseado. Una vez fijado el punto de ajuste, suelte el interruptor DISPLAY. La pantalla indicará la temperatura del fluido en el reservorio.

CONTROL DE FLUJO
El mango RECIRCULATING FLOW CONTROL controla la escala de flujo a su aplicación. En la posición + recibirá flujo completo, en la posición - no hay flujo.

MANTENIMIENTO PERIODICO
Inspeccione periódicamente el fluido del reservorio. Si es necesaria una limpieza, rocíe el reservorio con un fluido de limpieza compatible con el sistema de circulación y el fluido refrigerante.

El fluido refrigerante debe sustituirse periódicamente. Cuando se funciona a baja temperatura, la concentración de agua en el fluido refrigerante aumentará con el tiempo, ocasionando una pérdida de capacidad refrigerante.

Es necesario un vaciado periódico de las aletas del condensador. La frecuencia de limpieza depende del entorno en que funciona el aparato. Recomendamos una inspección visual mensual del condensador después de la instalación inicial. Después de varios meses, quedará establecida la frecuencia de limpieza.

Las unidades con bombas PD y TU tienen un filtro. Si hay residuos en el sistema, el filtro prevendrá que el material entre en la bomba y dañe las paletas de la bomba.

APPENDIX B 380V WYE MODIFICATION.

Refer to the serial number label on the rear of the unit for the specific electrical requirements of your unit.

For personal safety and equipment reliability, the following procedure should only be performed by a qualified service technician familiar with the safety precautions required for working inside an energized disconnect box.

Electrical connections are made in the electrical enclosure at the rear of the unit. Remove one of the “knock-outs” from the wall of the enclosure and install a conduit connector. Connect the line cord to the main contactor terminals labelled L1, L2, and L3. Connect the neutral wire (N) to the single pole terminal block labelled N. Connect the ground wire (G) to the grounding stud.

NOTE: Not all units require a neutral connector. Refer to the unit's serial number label on the rear of the unit and to your facility power source availability. Units not requiring a neutral connector use the same connection procedures except there will be no neutral wire or single pole terminal block.

NOTE: The HX-750 380/480V model contains a three phase condenser fan motor. It is possible to misconnect the main power and have the motor turn in the wrong direction resulting in incorrect airflow over the condenser. Proper airflow is achieved by exchanging any two main power connectors.

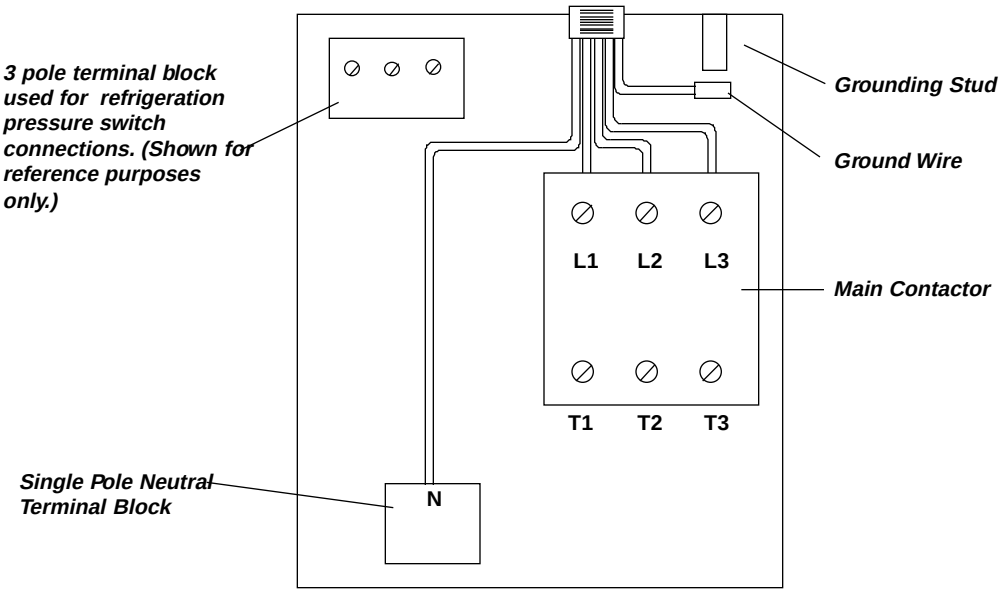

WARRANTY

NESLAB Instruments, Inc. warrants for 12 months from date of shipment any NESLAB unit according to the following terms.

Any part of the unit manufactured or supplied by NESLAB and found in the reasonable judgment of NESLAB to be defective in material or workmanship will be repaired at an authorized NESLAB Repair Depot without charge for parts or labor. The unit, including any defective part must be returned to an authorized NESLAB Repair Depot within the warranty period. The expense of returning the unit to the authorized NESLAB Repair Depot for warranty service will be paid for by the buyer. NESLAB's responsibility in respect to warranty claims is limited to performing the required repairs or replacements, and no claim of breach of warranty shall be cause for cancellation or recision of the contract of sales of any unit.

With respect to units that qualify for field service repairs, NESLAB's responsibility is limited to the component parts necessary for the repair and the labor that is required on site to perform the repair. Any travel labor or mileage charges are the financial responsibility of the buyer.

The buyer shall be responsible for any evaluation or warranty service call (including labor charges) if no defects are found with the NESLAB product.

This warranty does not cover any unit that has been subject to misuse, neglect, or accident. This warranty does not apply to any damage to the unit that is the result of improper installation or maintenance, or to any unit that has been operated or maintained in any way contrary to the operating or maintenance instructions specified in NESLAB's Instruction and Operation Manual. This warranty does not cover any unit that has been altered or modified so as to change its intended use.

In addition, this warranty does not extend to repairs made by the use of parts, accessories, or fluids which are either incompatible with the unit or adversely affect its operation, performance, or durability.

NESLAB reserves the right to change or improve the design of any unit without assuming any obligation to modify any unit previously manufactured.

THE FOREGOING EXPRESS WARRANTY IS IN LIEU OF ALL OTHER WARRANTIES, EXPRESSED OR IMPLIED, INCLUDING BUT NOT LIMITED TO WARRANTIES OR MERCHANTABILITY AND FITNESS FOR A PARTICULAR PURPOSE.

NESLAB'S OBLIGATION UNDER THIS WARRANTY IS STRICTLY AND EXCLUSIVELY LIMITED TO THE REPAIR OR REPLACEMENT OF DEFECTIVE COMPONENT PARTS AND NESLAB DOES NOT ASSUME OR AUTHORIZE ANYONE TO ASSUME FOR IT ANY OTHER OBLIGATION.

NESLAB ASSUMES NO RESPONSIBILITY FOR INCIDENTAL, CONSEQUENTIAL, OR OTHER DAMAGES INCLUDING, BUT NOT LIMITED TO LOSS OR DAMAGE TO PROPERTY, LOSS OF PROFITS OR REVENUE, LOSS OF THE UNIT, LOSS OF TIME, OR INCONVENIENCE.

This warranty applies to units sold in the United States. Any units sold elsewhere are warranted by the affiliated marketing company of NESLAB Instruments, Inc. This warranty and all matters arising pursuant to it shall be governed by the law of the State of New Hampshire, United States. All legal actions brought in relation hereto shall be filed in the appropriate state or federal courts in New Hampshire, unless waived by NESLAB.

HX-900
Recirculating Chiller

NESLAB Manual P/N 002762
Rev. 03/05/97

Instruction and Operation Manual

Table of Contents

PREFACE

Compliance 2
Unpacking 2
Warranty 2
After-sale Support 2

SAFETY

Warnings 2

GENERAL INFORMATION

Description 3
Specifications 3
Cooling Capacity 3

INSTALLATION

Site 3
Electrical Requirements 4
Plumbing Requirements 5
Fluids 6
Filling Requirements 6
Automatic Refill Device (Optional) 6

OPERATION

Temperature Controller 7
Interlocks (Optional) 7
Flow Control 8
Pressure Gauge 8
Remote Condenser (Optional) 8
Heater Package (Optional) 9
Pump Motor Overload Protector 9
High Pressure Cutout 9

MAINTENANCE & SERVICE

Service Contracts 10
Condenser Cleaning 10
Algae 10
Configuration 10
Reservoir Cleaning 11
Pressure Relief Valve Adjustment 11
Hoses 11

TROUBLESHOOTING

Checklist 11
Service Assistance 11

WARRANTY

Warranty 12

PREFACE
Compliance

Products tested and found to be in compliance with the requirements defined in the EMC standards defined by 89/336/EEC as well as Low Voltage Directive (LVD) 73/23/EEC can be identified by the CE label on the rear of the unit. This label indicates testing has demonstrated compliance with the following directives:

LVD, 73/23/EEC	Complies with UL 3101-1:93
EMC, 89/336/EEC	EN 55011, Class A Verification EN 50082-1:1992 IEC 1000-4-2:1995 IEC 1000-4-3:1994 IEC 1000-4-4:1995

For any additional information refer to the Letter of Compliance that shipped with the unit (Declaration of Conformity).

Unpacking

Retain all cartons and packing material until the unit is operated and found to be in good condition. If the unit shows external or internal damage, or does not operate properly, contact the transportation company and file a damage claim. Under ICC regulations, this is your responsibility.

Warranty

Units have a warranty against defective parts and workmanship for one full year from date of shipment. See back page for more details.

After-sale Support

NESLAB is committed to customer service both during and after the sale. If you have questions concerning the operation of your unit, or the information in this manual, contact our Sales Department. If your unit fails to operate properly, or if you have questions concerning spare parts or Service Contracts, contact our Service Department.

Before calling, please refer to the serial number label on the rear of the control box to obtain the following information (see Section II, Description):

-unit part number _____

-unit serial number _____

Safety

Warnings

Make sure you read and understand all instructions and safety precautions listed in this manual before installing or operating your unit. If you have any questions concerning the operation of your unit or the information in this manual, contact our Sales Department (see After-sale Support).

Installation, operation, or maintenance of the unit other than described in this manual may result in a hazardous situation.

Transport the unit with care. Sudden jolts or drops can damage the refrigeration lines.

Do not attempt to defeat any of the interlock switches or safety features built into the unit.

Observe all warning labels.

Never remove warning labels.

Never operate damaged or leaking equipment.

Never operate the unit without cooling fluid in the reservoir.

Make sure the unit is off before connecting or disconnecting the power cord or other cables.

Always turn off the unit and disconnect the power cord from the power source before performing any service or maintenance procedures, or before moving the unit.

Empty the reservoir before moving the unit.

Never operate any of your equipment with damaged power cords.

Refer all service and repairs of your unit to a qualified technician.

In addition to these safety warnings, warnings are posted throughout the manual. These warnings are designated by an exclamation mark inside an equilateral triangle with text highlighted in bold. Read and follow these important instructions. Failure to observe these instructions can result in permanent damage to the unit, significant property damage, or personal injury or death.

General Information

Description

The HX Recirculating Chiller is designed to provide a continuous flow of cooling fluid at a constant temperature and volume.

The unit consists of a water-cooled or air-cooled refrigeration system, a fluid reservoir, a fluid recirculation pump, and a temperature controller.

Throughout the manual, you will be asked to consult the unit's serial number label, or the pump identification label, or both, for specific information. Both labels are located on the rear of the unit.

Specifications

Temperature Range	+5°C to +35°C
Temperature Stability	±1.0°C
Cooling Capacity[1]	38,000 Watts
Pumping Capacity	35 gpm @ 45 psi
Air-Cooled Unit Dimensions	
(H x W x D)	
Inches	63¾ x 46 x 29
Centimeters	162.0 x 116.8 x 73.6
Water-Cooled Unit Dimensions	
(H x W x D)	
Inches	50⅝ x 46 x 28¾
Centimeters	128.3 x 116.8 x 73.0
Reservoir Volume	
Gallons	15.0
Liters	57.0
Weight	
Pounds	1250
Kilograms	567

1. Circulating water at 25°C, at 20°C ambient. 31,500 watts for 50HZ units.

Cooling Capacity

The unit will retain its full rated capacity in ambient temperatures to approximately +75°F (+24°C). Above +75°F, reduce the cooling capacity 1% for every 1°F above +75°F, to a maximum ambient temperature of +95°F. In degrees Celsius, reduce the cooling capacity 1% for every 0.5°C above +24°C, to a maximum ambient of +35°C.

Cooling capacity varies depending on fluid temperature, ambient temperature, and cooling fluid.

Installation

Site (Air-cooled Units)

The unit should be located in a laboratory or clean industrial environment where ambient temperatures are inside the range of +55°F to +95°F (+13°C to +35°C).



Never place the unit in a location where excessive heat, moisture, or corrosive materials are present.

Positioned the unit so the air intake and discharge is not impeded.

Air is drawn through the front of the unit and discharged through the sides and rear. A minimum clearance of 2 feet (0.6 meter) on these three sides is necessary for adequate ventilation.

The minimum air flow requirement is 5600 cubic feet per minute.

In some applications where space is at a premium, the minimum ventilation clearance can be compromised. However, consult our Sales Department before positioning the unit in a location with less minimum clearance than listed above. Inadequate ventilation will cause a reduction in cooling capacity and, in extreme cases, compressor failure.

Excessively dusty areas should be avoided and a periodic cleaning schedule should be instituted (see Section VII, Condenser Cleaning).

Site (Water-Cooled Units)

The unit should be located in a laboratory or clean industrial environment with easy access to a facility cooling water supply and a drain.

All units are equipped with casters for easy movement. This allows the unit to be placed in a small area, as long as there is ample space for the unit to be moved for access on all four sides. A minimum clearance of 3 feet (1 meter) on two adjacent sides is recommended.

The facility cooling water supply must meet or exceed the flow rate requirements listed in the following table for the unit to operate at its full rated capacity. If the facility cooling water does not meet these standards, the cooling capacity will be reduced.

Temp	**13°C**	**18°C**	**24°C**	**29°C**
Flow Rate				
GPM	11	15	23.5	32

If the unit is being used with a building water supply, the back pressure of the drain must be less than the supply pressure.

A water regulating valve, located in the TAP WATER line, regulates the flow rate of the cooling water supply as it enters the unit. The valve regulates the flow rate based on the heat load. Flow through the unit stops automatically when the unit is shut off.

Electrical Requirements



The construction of this unit provides protection against the risk of electric shock by grounding appropriate metal parts. The protection may not function unless the power cord is connected to a properly grounded outlet. A proper ground connection must be provided.

Make sure the voltage of the power source agrees with the unit's voltage and frequency rating. The unit is designed to tolerate deviations of ±10% from the rated line voltage.

Volts	208	380/420
Hertz	60	50
Phase	3	3

Plumbing Requirements

Before installing the unit to an instrument that previously used tap water as a fluid, flush the instrument several times to remove any rust or scale that has built up.

The plumbing fittings used to connect your HX to your application are located on the right side of the unit (labelled SUPPLY and RETURN). These connections are one inch FPT.

Remove the plastic protective plugs from the SUPPLY and RETURN connections. Connect the SUPPLY fitting to the inlet of your application. Connect the RETURN fitting to the outlet of your application.

The RESERVOIR DRAIN connection, located on the rear of the unit, is a 1/2 inch FPT fitting connected internally to the unit reservoir. This fitting provides a means for draining the reservoir. The unit is shipped with a plug installed in this fitting. To drain the reservoir remove the plug and place the drain valve to the vertical position.

If the unit is “hard plumbed” to your application or, for water-cooled units, to the cooling water supply, damage can occur if the unit is bumped or jolted from its site. Provisions should be made to prevent the unit from being moved after installation. Once the unit is plumbed, secure the locking castors on the unit’s base. If the unit is located in a heavy traffic area where there is a possibility of collision, it may be necessary to secure the unit to the site using blocks or mounting brackets.

Flexible tubing, if used, should be of heavy wall or reinforced construction. All tubing should be rated to withstand 110 psi at +100°C. Make sure all tubing connections are securely clamped. Avoid running tubing near radiators, hot water pipes, etc. If substantial lengths of tubing are necessary, insulation may be required to prevent loss of cooling capacity.

Keep the distance between the unit and the instrument being cooled as short as possible, and to use the largest diameter tubing practical. Tubing should be straight and without bends. If diameter reductions must be made, they should be made at the inlet and outlet of your application, not at the HX water chiller.

If substantial lengths of cooling lines are required, they should be pre-filled with fluid before connecting them to the unit.

For water-cooled units, the plumbing connections used to connect the condenser in the HX to the facility cooling water supply are located at the rear of the unit (labelled TAP WATER and DRAIN). These fittings are one inch FPT.

Remove the plastic protective plugs from the TAP WATER and DRAIN connections. Connect the TAP WATER fitting to the facility cooling water supply. Connect the DRAIN fitting to a drain.

Fluids

The selected cooling fluid must have a viscosity of 50 centistokes or less at the lowest operating temperatures.

Your unit is equipped with plate heat exchangers, do not use 100% pure water as a recirculating fluid. Due to the physical nature of a plate heat exchanger, and its response to temperature changes, using 100% water may cause the plate exchanger to rupture.

Never use flammable or corrosive fluids with the unit. Distilled and deionized water may be aggressive and cause material corrosion. Please contact NESLAB before subjecting the unit to prolonged exposure to distilled or deionized water.

Do not use automobile anti-freeze. Commercial anti-freeze contains silicates that can damage the pump seal. Use of automobile anti-freeze will void the manufacturer's warranty.

Filling Requirements

Open the reservoir access panel on the top of the unit. Loosen the thumbscrews and remove the reservoir cover.

Fill the reservoir with fluid to within 1inch of the top.

The fluid capacity of the hose connections and the application may be significant. To prevent lowering of the fluid level in the reservoir below the operating level, have extra fluid on hand to keep the reservoir filled to within 1 inch of the top.

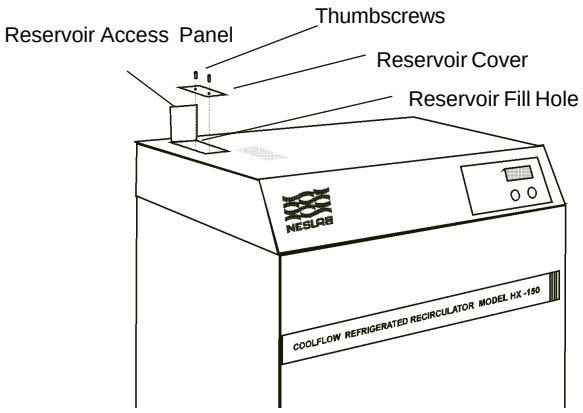

Automatic Refill Device (Optional)

The automatic refill device is designed to maintain the correct level of cooling fluid in the reservoir. The device consists of a float switch in the reservoir and a solenoid valve on top of the reservoir. If the cooling fluid level falls, the float switch will drop, opening the solenoid valve and allowing make-up fluid to fill the reservoir. Once the cooling fluid level reaches the proper level, the float switch will rise and the solenoid valve will close.

The plumbing connection for the refill device is located at the rear corner of the unit and is labelled AUTO REFILL. This connection is a $^{3}/_{8}$ inch OD stainless steel barbed fitting.

Connect this fitting to a make-up fluid source using $^{5}/_{16}$ or $^{3}/_{8}$ inch ID flexible tubing. Make sure all tubing connections are securely clamped.

Tubing is available from NESLAB. Contact our Sales Department for more information (see Preface, After-sale Support).

A 50/50 mixture of ethylene glycol and water is required to prevent damage to the plate heat exchanger. When using the refill device, ensure the proper mixture is maintained.

Operation

Temperature Controller

Start Up

The unit has a compressor crankcase heater which warms the oil in the compessor and prevents refrigerant from mixing with the oil. Before start up, the unit must be connected to its power source for at least 12 hours. This allows time for the oil to be heated and separate from the refrigerant.

Before starting the unit, double check all electrical and plumbing connections and make sure the circulating system (the HX, the instrument being cooled, and the circulating lines) has been properly filled with cooling fluid.

For water-cooled units ensure that the facility water is turned on.

To start the unit place the ON/OFF POWER switch to the ON position and press the START switch. (Some units are not equipped with START switches, see Interlocks—Fault Response paragraph on this page.)

To stop the unit place the ON/OFF switch to the OFF position.

When the unit is shut off, wait approximately 5 minutes before restarting.This allows time for the refrigeration pressures to equalize. If the pressures are not allowed to equalize, the compressor will short-cycle (clicking sound) and no cooling will occur.

Temperature Adjustment

The COOL and IDLE indicators, located on the control panel, indicate the status of the refrigeration system. The IDLE indicator is lit when the unit is in the hot gas by-pass mode. The COOL indicator is lit when the refrigeration system is removing heat from the cooling fluid. As the fluid temperature approaches the temperature setpoint, the indicators cycle on and off to indicate the duty cycle of the system. The unit can be in the COOL or the IDLE mode, but never both at the same time. A balance between COOL and IDLE is needed to control temperature.

To display the temperature setpoint, press and hold the Setpoint/Actual Temp button. To adjust the setpoint, press and hold the Setpoint/Actual Temp button and turn the Adjust dial until the desired temperature setpoint is indicated on the Temp°C LED display. Once the setpoint is adjusted, release the Setpoint/Actual Temp button. The Temp°C LED display will indicate the temperature of the fluid in the reservoir.

NOTE: Inadvertent movement of the Adjust dial will result in a change in the setpoint. The change will not be immediately reflected on the Temp°C display unless the Setpoint/Actual Temp button is pressed. The display will eventually change as the unit responds to the new setpoint

Interlocks (Optional)

Options

The temperature controller has up to four monitoring options: low temperature, high temperature, low fluid level, and low flow. The controller can be built with any combination of these four monitors.

Fault Response

Controllers with a START switch are configured to shut off in the event that a fault occurs. Controllers NOT equipped with a START switch will allow the unit to continue to operate if a fault occurs. This option is available for customers who are willing to accept the risk of damage to the unit in order to continue to provide cooling fluid to the instrument being cooled.

With either controller configuration, the relay contacts connected to the controller receptacle will open and the FAULT indicator will light if a fault occurs. The cause of the fault must be identified and corrected before the unit can be restarted.

Temperature Monitors

The optional high and low temperature monitors are connected to sensors that monitor the temperature of the cooling fluid as it exits the reservoir. The monitors protect the system from exposure to excessively hot or cold cooling fluid. A temperature fault occurs when the fluid temperature exceeds the set temperature limit.

To adjust either temperature monitor, turn the appropriate calibrated dial tothe desired temperature limit.

Low Fluid Level Monitor

The low fluid level monitor is connected to a float switch in the reservoir. If the controller is equipped with a LOW LEVEL indicator, the low level monitor is not connected to the fault circuit. The indicator will light if the reservoir cooling fluid drops below the operating level. The indicator serves only as a warning. A fault will not occur as a result of a low level condition.

If the controller is NOT equipped with a LOW LEVEL indicator, the low level monitor is connected to the fault current. A fault will occur if the reservoir cooling fluid level drops below the operating level.

Low Flow Monitor

The optional low flow monitor is connected to a flow switch in the RETURN line. A low flow fault occurs when the flow rate of the returning cooling fluid drops below 0.3 gallons per minute (1.0 liters per minute).

When starting a unit with a controller equipped with both a low flow monitor and a START switch, the START switch must be held in the ON position until the flow switch “closes” (2 or 3 seconds). If time is not allowed for the flow switch to close, the unit will stop when the START switch is released.

Interlock Relay Contacts

A set of contacts are connected to a receptacle on the operator panel. The contacts are rated 15A, 125V. This is not a power inlet or outlet. The receptacle is isolated from the circuitry. Its ground pin is connected to the chassis. The contacts are normally open: they are closed when the unit is running normally (no faults present), and they are open when the unit is off or when a fault occurs.

Flow Control

The flow control handle is connected to a valve that controls the flow of the cooling fluid to your application. The handle is on the right side of the unit.

When the handle is in the OPEN position, the valve is open and all possible fluid is supplied to your application. When the handle is in the CLOSED position, the valve is closed and no fluid is supplied to your application. When the handle is between these two positions, the flow rate of the fluid is between full flow and no flow.



Never "crank" the valve wide open from the closed position.

Pressure Gauge

The RECIRCULATING PRESSURE gauge indicate the operating pressure of the system

Remote Condenser (Optional)

Units with the optional remote air-cooled condenser are equipped with high and low refrigeration pressure monitors. The monitors are connected internally to a pressure gauge that monitors refrigeration pressure at the suction side of the compressor. The monitors protect the refrigeration system from operating under excessively high and low refrigeration pressures. A pressure fault occurs when the refrigeration pressure exceeds the set pressure limit.

The status of the monitors is indicated by the COMPRESSOR LOW PRESSURE and COMPRESSOR HIGH PRESSURE indicators located on the operator panel.

In the event of either a low or high refrigeration pressure fault, the unit will shut down. The unit must be manually restarted after the cause of the fault has been identified and corrected. If both indicators are lit simultaneously, an interruption in the main power supply has occurred.

Heater Package (Optional)

The heater package option consists of an immersion heater in the unit's fluid reservoir, a high temperature limit device, a solid state zero-crossing relay, a heater ENABLE/DISABLE switch and a FAULT indicator. The ENABLE/DISABLE switch and the FAULT indicator are located on a small control box appended to the right side of the case top. The FAULT indicator will light if the high temperature limit device is tripped. The high temperature limit device will disconnect power to the heater if the heater surface temperature exceeds a preset limit.

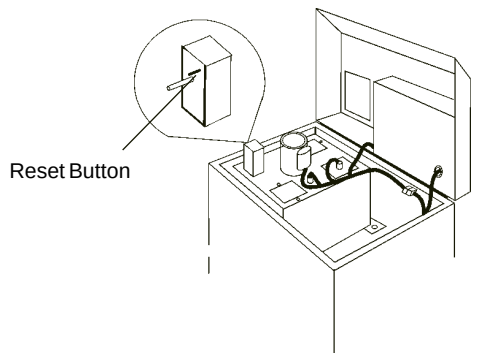

High Temperature Limit Device

With the ENABLE/DISABLE switch set to ENABLE, the heater will cycle on and off under the control of the temperature controller. With the switch in the DISABLE position, the heater will remain off.

The heater high temperature limit device senses the surface temperature of the heater. If the heater temperature becomes too high, the limit device opens a mechanical relay to remove power from the heater.

The heater surface temperature may operate several degrees higher than the reservoir fluid. The limit device is factory set to a temperature above the upper limit of the temperature controller's range.

For personal safety and equipment reliability, the following procedure must only be performed by a qualified technician. Contact our Service Department for assistance (see Preface, After-sale Support).

To reset a tripped temperature limit device, lift and open the case top. The case top is secured to the unit base by a hinge between the case top and the base (along the rear of the unit), and by two spring clips located at the front corners. To gain access to the temperature limit device, disengage the spring clips with a flat bladed screw driver and lift the front of the case top and tilt it back. A support brace, located on the right side of the inner case, will stop and support the case top.

You must identify and correct the fault before restarting the unit.

The protection device and the heater power connections are located in a small stainless steel box on top of the fluid reservoir. The protection device has a reset button and a temperature limit adjustment shaft. Press the reset button to restore operation. **NOTE:** On units without a reset button cycle the power switch.

Pump Motor Overload Protector

The overload protector prevents the pump motor from exposure to excessive current. If an overload fault occurs, due, for example, to excessive pressure or flow, or excessive ambient temperature, the overload protector will shut off the motor.

The overload protector automatically resets when the condition clears

Depending on your electrical configuation, the unit may continue to run if an overload fault occurs. To start the pump after the protector resets press the START switch on the controller.

High Pressure Cutout

For water-cooled units, should the refrigeration discharge pressure become too high the high pressure cutout will activate and shut down the unit. High pressures can be caused by a lack of cooling water to the compressor or debris in the refrigeration lines.

Locate the reset switch. Press in on the switch until a "click" is heard. If the reset does not "click" the cutout was not activated and the unit shut down occurred for another reason.

Maintenance & Service

Service Contracts

NESLAB offers on-site Service Contracts that are designed to provide extended life and minimal down-time for your unit. For more information, contact our Service Department (see Preface, After-sale Support).

Condenser Cleaning (Air-cooled units only)

For proper operation, the unit needs to pull substantial amounts of air through a finned condenser. A build up of dust or debris on the fins of the condenser will lead to a loss of cooling capacity.

The frequency of cleaning depends on the operating environment. We recommend that a visual inspection of the condenser be made monthly after initial installation. After several months, the frequency of cleaning will be established.

Periodic vacuuming of the fins on the condenser is necessary.



Exercise caution not to damage the condenser fins or coil. Condenser fin or coil damage can result in a loss of performance and, in extreme cases, refrigeration system failure.

Algae

To restrict the growth of algae in the reservoir we recommend the reservoir cover be kept in place and that all circulation lines be opaque. This will eliminate the entrance of light which is required for the growth of most common algae.

NESLAB recommends the use of Chloramine-T, 1 gram per 3.5 liters.

Configuration

Case Top

The unit has a hinged case top to allow service access. The case top is secured to the top of the unit base by a hinge between the case top and base (along the rear of the unit), and by two spring clips located at the front corners. To gain access to the pump assembly or the reservoir area, disengage the spring clips with a flat bladed screw driver and lift the front of the top cover and tilt it back. A support brace, located on the right side of the inner base, will stop and support the case top. Ensure the spring clips engage when the top is lowered back into position.

Reservoir Cover

Access to the inside of the fluid reservoir is necessary to clean the reservoir.



Disconnect the unit from its power source before removing the reservoir cover.

Remove the stainless steel screws that secure the reservoir cover to the reservoir. Lift the cover high enough to ensure the sensors underneath it will clear and then carefully place the cover to the side.

Service Access Panels

Service panels on your unit allow easy access to the pump and refrigeration assemblies. The panels are designed to allow removal without disconnecting the HX from the instrument being cooled.



Disconnect the unit from its power source before removing any of the access panels.

Reservoir Cleaning

Periodic reservoir cleaning is necessary. It is recommended that a visual inspection of the reservoir be made monthly after initial installation. After several months, the frequency of cleaning will be established.



Disconnect the unit from its power source and drain the reservoir before cleaning the reservoir.

Lift the top cover to access the reservoir. Remove the reservoir cover as described earlier in this section.

Clean the reservoir with a cleaning fluid compatible with the recirculating system and the cooling fluid.



Do not use steel wool or other abrasive materials. They can scratch the stainless steel surface and initiate rusting.

When the reservoir is clean, re-assemble the cover assembly and close the case top.

Refer to Section III, Filling Requirements for instructions on replacing the cooling fluid.

Pressure Relief Valve Adjustment

To adjust the operating pressure of your unit close the flow control handle. Locate the set screw above the pump motor. Turning the screw clockwise raises the pressure, turning it counter clockwise lowers the pressure.

Hoses

The unit's hoses should be inspected and tightened on a semi-annual basis.

Troubleshooting

Checklist

Unit will not start

Check power source for correct voltage output. Refer to the serial number label on the rear of the unit or rear of analog temperature controller for the specific electrical requirements of your unit. Power source must be specified voltage, ±10%.

Check house circuit breaker.

On water-cooled units, make sure the cooling water supply is connected to the TAP WATER connection, not the DRAIN connection. *Ensure the facility water is turned on.*

Also on water-cooled units, check the High Pressure Cutout, it may need to be reset (see Section V, Operation).

Unit will not circulate fluid

Check the tubing between the unit and your application for obstructions.

Inadequate temperature control

Make sure the installation of the unit is in compliance with the conditions described in Section III.

Make sure the heat load of the instrument being cooled is not greater than the cooling capacity of the unit.

When the unit is shut off, wait approximately five minutes before restarting. This allows time for the refrigeration pressures to equalize. If the pressures are not allowed to equalize, the compressor will short-cycle (clicking sound) and no cooling will occur.

Service Assistance

If, after following these troubleshooting steps, your unit fails to operate properly, contact our Customer Service Department for assistance (see Preface, After-sale Support). Before calling, please obtain the following information:

- *unit part number*
- *unit serial number*
- *voltage of unit*
- *voltage of power source*

WARRANTY

NESLAB Instruments, Inc. warrants for 12 months from date of shipment any NESLAB unit according to the following terms.

Any part of the unit manufactured or supplied by NESLAB and found in the reasonable judgment of NESLAB to be defective in material or workmanship will be repaired at an authorized NESLAB Repair Depot without charge for parts or labor. The unit, including any defective part must be returned to an authorized NESLAB Repair Depot within the warranty period. The expense of returning the unit to the authorized NESLAB Repair Depot for warranty service will be paid for by the buyer. NESLAB's responsibility in respect to warranty claims is limited to performing the required repairs or replacements, and no claim of breach of warranty shall be cause for cancellation or recision of the contract of sales of any unit.

With respect to units that qualify for field service repairs, NESLAB's responsibility is limited to the component parts necessary for the repair and the labor that is required on site to perform the repair. Any travel labor or mileage charges are the financial responsibility of the buyer.

The buyer shall be responsible for any evaluation or warranty service call (including labor charges) if no defects are found with the NESLAB product.

This warranty does not cover any unit that has been subject to misuse, neglect, or accident. This warranty does not apply to any damage to the unit that is the result of improper installation or maintenance, or to any unit that has been operated or maintained in any way contrary to the operating or maintenance instructions specified in NESLAB's Instruction and Operation Manual. This warranty does not cover any unit that has been altered or modified so as to change its intended use.

In addition, this warranty does not extend to repairs made by the use of parts, accessories, or fluids which are either incompatible with the unit or adversely affect its operation, performance, or durability.

NESLAB reserves the right to change or improve the design of any unit without assuming any obligation to modify any unit previously manufactured.

THE FOREGOING EXPRESS WARRANTY IS IN LIEU OF ALL OTHER WARRANTIES, EXPRESSED OR IMPLIED, INCLUDING BUT NOT LIMITED TO WARRANTIES OR MERCHANTABILITY AND FITNESS FOR A PARTICULAR PURPOSE.

NESLAB'S OBLIGATION UNDER THIS WARRANTY IS STRICTLY AND EXCLUSIVELY LIMITED TO THE REPAIR OR REPLACEMENT OF DEFECTIVE COMPONENT PARTS AND NESLAB DOES NOT ASSUME OR AUTHORIZE ANYONE TO ASSUME FOR IT ANY OTHER OBLIGATION.

NESLAB ASSUMES NO RESPONSIBILITY FOR INCIDENTAL, CONSEQUENTIAL, OR OTHER DAMAGES INCLUDING, BUT NOT LIMITED TO LOSS OR DAMAGE TO PROPERTY, LOSS OF PROFITS OR REVENUE, LOSS OF THE UNIT, LOSS OF TIME, OR INCONVENIENCE.

This warranty applies to units sold in the United States. Any units sold elsewhere are warranted by the affiliated marketing company of NESLAB Instruments, Inc. This warranty and all matters arising pursuant to it shall be governed by the law of the State of New Hampshire, United States. All legal actions brought in relation hereto shall be filed in the appropriate state or federal courts in New Hampshire, unless waived by NESLAB.



Recirculating Chillers

NESLAB chillers are world-renowned for their quality and reliability. For over 35 years, NESLAB has been the industry leader in innovation and dependability making our equipment the preferred chiller for the majority of companies world-wide. The use of hot gas bypass temperature control in a chiller, today's industry standard, was developed by NESLAB. Forward thinking concepts like this, along with superior performance, make NESLAB chillers the number one choice to cool your valuable equipment, improve your processes, and save on costly tap water usage.

Recirculating *Chillers*

Using a chiller for your water cooled equipment is a wise decision for many reasons. Your valuable equipment needs to operate at its maximum level of performance. Cooling with tap water, tower water, and building chilled water can prove unreliable or cause problems. Fluctuations in temperature, pressure, and flow, as well as minerals and particulates, can produce unreliable results and damage to your equipment. A NESLAB chiller will eliminate all of these problems and save you money. Running tap water through your equipment or process is very expensive. You pay twice for the use of water. Running 4 gallons of water, 24 hours per day, 7 days a week, 52 weeks per year can potentially send 2,000,000 gallons of water down the drain per year. As you can see, by recirculating, a NESLAB chiller can pay for itself in a very short time.



Deciding on which NESLAB chiller to use is simple. Use our easy to read charts on the following pages to determine which model best suits your needs. What is your heat load requirement? What temperature do you need to circulate? What is your flow and pressure need? Do you need a simple workhorse chiller or a highly sophisticated chiller? If you are not sure of your equipment's water cooling requirements or need advice on how to best utilize our chiller, call our Applications Engineers. We have extensive cross reference information on most equipment and the experience to advise you on which NESLAB chiller will meet your needs exactly.

NESLAB is the industry leader in chiller design and innovation. We were the first to use the hot gas bypass method of temperature control in a chiller. It is now considered the industry standard. Hot gas bypass works by routing the hot, uncondensed refrigerant back through the reservoir coil when heating is needed. This eliminates on/off cycling of compressors and the addition of energy-wasting heater. You get better temperature control, greater energy efficiency, and increased compressor life.





NESLAB also introduced the industry's first completely CFC-free portable chiller in our CFT Series. We feel a responsibility to use the most environmentally friendly refrigerants available. Our HX Series uses an HCFC refrigerant which is universally accepted as an environmentally friendly alternative to CFC's.

Which chiller series should you use?

CFT Series

Heat removal capabilities from 580 watts to 11,000 watts. Basic, simple, a dependable performer.

(Pages 33-34)

HX Series

Heat removal capabilities from 2000 watts to 75,000 watts. Many pumps, controllers, and hundreds of options available.

(Pages 35-42)

System Series

Complete, packaged, Water to Water Heat Exchangers with built-in pump and temperature controller.

(Pages 45-48)

Recirculating Chillers - CFT Series

As the original designer of the small portable chiller, NESLAB ntroduced the CFT Series to cool precise analytical equipment. t now cools virtually every water cooled application including lab- ratory, medical, semiconductor, industrial, and laser industries. This tried and true design has made the CFT Series the number one hoice among equipment manufacturers. The heart of the CFT Series is the CFC-free refrigeration system which provides long ife, maintenance free operation. All CFT Series chillers also fea- ure a rugged, sealed PVC reservoir. The sealed design minimizes luid evaporation and eliminates maintenance allowing you to focus n your work instead of the chiller. The sealed reservoir also llows circulation to an open container; something not possible with an unsealed reservoir, adding to the versatility of your CFT. n addition, the CFT Series incorporates a built-in fluid bypass system to protect the chiller in the event of an external line blockage. The standard digital microprocessor controller shows the recirculating temperature and the setpoint to a resolution of 1°C, and maintains the recirculating temperature to ±0.5°C of the setpoint. Should you be concerned about protecting your equipment or your CFT, we have included a user adjustable high and low temperature limit safety, displaying the error should the chiller reach one of these limits. If you have special cooling water requirements for your application, chances are we can meet your needs with one of the many options available. High and low temperature ranges, condenser air filter packages, deionized water packages and convenient accessories such as tubing and fluids make the CFT Series the perfect choice for your liquid temperature control needs.



Microprocessor Controller
Provides a readout and setpoint resolution of 1°C and maintains a stability of ±0.5°C

Compact Design
Maximizes use of limited floor space



Removable Condenser Vent
Quick, easy access to the condenser for routine cleaning. Also simplifies installation of our accessory air filter package

Recirculating Chiller Specifications

MODEL	CFT-25	CFT-33	CFT-75	CFT-150	CFT-300
TEMPERATURE RANGE	+5°C to +30°C	+5°C to +30°C	+5°C to +30°C	+5°C to +35°C	+5°C to +35°C
TEMPERATURE STABILITY	±0.5°C	±0.5°C	±0.5°C	±0.5°C	±1.0°C
COOLING CAPACITY					
60 Hz Models	580 Watts at 20°C 1978 BTU/hr at 20°C 499 Kcal/hr at 20°C	950 Watts at 20°C 3240 BTU/hr at 20°C 817 Kcal/hr at 20°C	2100 Watts at 20°C 7161 BTU/hr at 20°C 1806 Kcal/hr at 20°C	4500 Watts at 20°C 15345 BTU/hr at 20°C 3870 Kcal/hr at 20°C	10650 Watts at 20°C 36315 BTU/hr at 20°C 9181 Kcal/hr at 20°C
50 Hz Models	475 Watts at 20°C 1620 BTU/hr at 20°C 408 Kcal/hr at 20°C	1000 Watts at 20°C 3410 BTU/hr at 20°C 860 Kcal/hr at 20°C	1900 Watts at 20°C 6485 BTU/hr at 20°C 1634 Kcal/hr at 20°C	3735 Watts at 20°C 12735 BTU/hr at 20°C 3212 Kcal/hr at 20°C	9000 Watts at 20°C 30690 BTU/hr at 20°C 7759 Kcal/hr at 20°C
PUMP	MD-30*/PD-1	PD-1/PD-2	PD-1/PD-2	PD-2/CP-55	PD-2/CP-55
RESERVOIR VOLUME Gallons/Liters:	.375/1.4	1.1/4.2	1.8/6.8**	5.625/21.29	5.625/21.29
DIMENSIONS (H x W x D) In.	22 x $12^{1/2}$ x 21	$24^{1/2}$ x $14^{3/4}$ x 22	$26^{1/2}$ x $14^{7/8}$ x $24^{1/2}$	$36^{3/4}$ x $21^{3/8}$ x $27^{3/4}$	43 x $25^{1/2}$ x $27^{3/4}$
Cm.	55.9 x 31.8 x 53.34	62.2 x 37.5 x 55.9	67.3 x 37.8 x 62.2	93.3 x 54.3 x 70.5	109.2 x 64.8 x 70.5
POWER REQUIREMENTS 50 Hz Models:	115V, 60 Hz, 10 Amps 220-240V, 50 Hz, 6 Amps	115V, 60 Hz, 13 Amps 220-240V, 50 Hz, 7 Amps	208-230V, 60 Hz, 9 Amps 220-240V, 50 Hz, 10 Amps	208-230V, 60 Hz, 13 Amps 220-240V, 50 Hz, 12 Amps	208-230V, 60 Hz, 3Ø 380V, 50 Hz, 3Ø
SHIPPING WEIGHT	132 Lbs/59.9 Kgs	160 Lbs/72.6 Kgs	215 Lbs/97.5 Kgs	311 Lbs/141.1 Kgs	450 Lbs/204.1 Kgs

Specifications listed for standard units circulating water at 20°C ambient. Performance specifications will be affected by changes in temperature, ambient or coolant. *Standard circulating pump for 50Hz models is PD-1. **1.25 gallons/4.73 liters for 50Hz units. Specifications subject to change.

Cooling Capacity

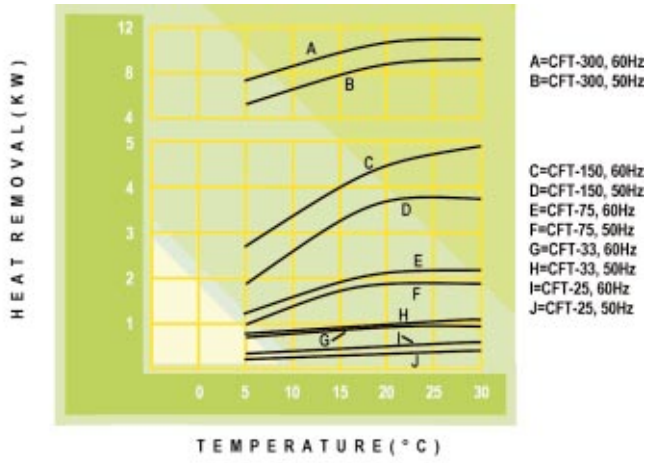

Magnetic Drive Pump Capacity

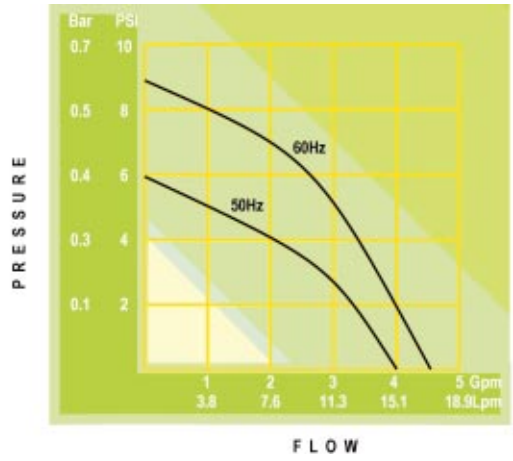

Positive Displacement Pump Capacity

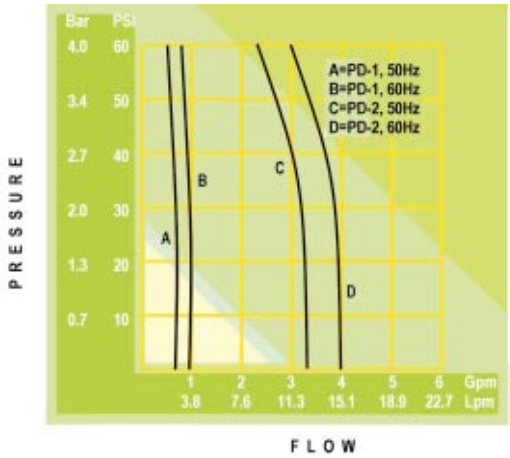

APPLICATIONS

- Condenser Cooling
- Diffusion Pumps
- Turbo-Molecular Pumps
- Vacuum Systems
- GC/MS
- Lasers
- Electron Microscopes
- ICP
- FTIR
- Plasma Etch Equipment
- Sputtering Systems
- AA Graphite Furnace
- Resistance Welders

Recirculating Chillers - HX Series

The HX Series of chillers are NESLAB's versatile, highly configrable chiller series that can go from a simple workhorse to a highly ophisticated chiller via the many options available. This makes it erfectly suitable for use in laboratory, laser, industrial, semiconuctor, or medical applications. Since its introduction in the late ixties, the HX Series has undergone continuous design enhancements and improvements. But, some things haven't changed for ver 35 years; dependable performance, use of the highest quality materials, and a design that will be trouble free for many years.

Your HX chiller is a solid investment to protect and maximize the performance of your valuable equipment. The HX Series comes in a variety of standard configurations. To meet your needs exactly, we offer choices of controllers, pumps, temperature ranges, and condenser designs. If you're not sure which version would be the most suitable for your application, contact one of our Applications Engineers. They have the expertise necessary to make the perfect recommendation.

Easy Access
Hinged top opens for easy access to internal components



Digital Temperature Controller
An LED readout displays recirculating temperature and setpoint, both with a resolution of 1°C. A low liquid level indicator guards against fluid evaporation or circulating leaks. Idle and Cool lights are essential for diagnostics and operating status.

TC-400 Temperature Controller
A fully programmable, self-diagnostic microprocessor controller featuring:

- Recirculating fluid and setpoint temperature to a 1°C resolution
- Process flow rate readout
- Low level, high temperature, low temperature, and low flow fault with alarm
- User adjustable alarm limits
- Analog interface
- Remote sensor interface (remote sensor purchased separately)

Options include:

- Remote sensor
- Remote controller
- Resistivity display for deionized water applications
- RS-232 or RS-485 serial communications interface
- 0.1°C temperature resolution

Smart Design
Stainless steel reservoir and heat exchanger ensures fluid compatibility

Reservoir drain for quick fluid changes

Recirculating Chiller Specifications

MODEL	HX-75	HX-150
TEMPERATURE RANGE	+5°C to +35°C	+5°C to +35°C
TEMPERATURE STABILITY	±0.1°C	±0.1°C
COOLING CAPACITY		
60 Hz Models	2000 Watts at 20°C 6820 BTU/hr at 20°C 1720 Kcal/hr at 20°C	4500 Watts at 20°C 15345 BTU/hr at 20°C 3870 Kcal/hr at 20°C
50 Hz Models	1660 Watts at 20°C 5660 BTU/hr at 20°C 1428 Kcal/hr at 20°C	3735 Watts at 20°C 12735 BTU/hr at 20°C 3212 Kcal/hr at 20°C
PUMP	Specify from pump graphs	Specify from pump graphs
RESERVOIR VOLUME		
Gallons/Liters:	5/18.9	8/30.3
DIMENSIONS (H x W x D) In.	$35^{3/4}$ x $23^{1/4}$ x $18^{3/4}$	$39^{5/8}$ x $26^{1/4}$ x $21^{1/8}$
Cm.	90.8 x 59.0 x 47.6	100.6 x 66.7 x 53.7
POWER REQUIREMENTS	208-230V, 60 Hz, 12 Amps	208-230V, 60 Hz, 17 Amps
50 Hz Models:	220-240V, 50 Hz, 11 Amps	220-240V, 50 Hz, 14 Amps
SHIPPING WEIGHT	261 Lbs/118.4 Kgs	320 Lbs/145.2 Kgs

Specifications listed for standard units circulating water at 20°C ambient. Performance specifications will be affected by changes in temperature, ambient or coolant. Cooling capacity and amperage ratings based on units with CP-25 pump, may be affected by optional pumps. Specifications subject to change.

APPLICATIONS

- Lasers
- Process Cooling
- Medical Lasers
- Linear Accelerators
- Diffusion Pumps
- Turbo-Molecular Pumps
- Vacuum Systems
- Plasma Etch Equipment
- Sputtering Systems

ACCESSORIES

- External Pressure Reducer
- External Temperature Readout
- Plumbing Packages
- Circulating Hose
- Hose Insulation

Cooling Capacity

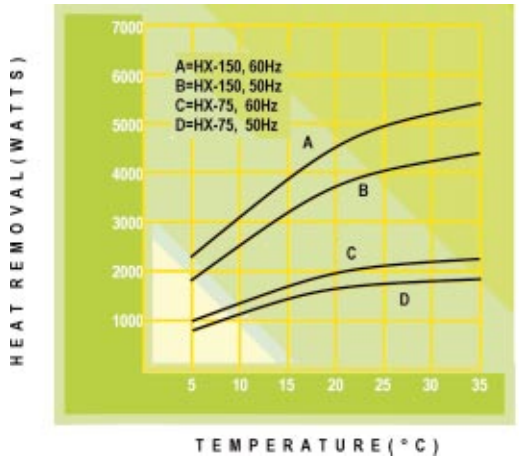

Centrifugal Pump Capacity

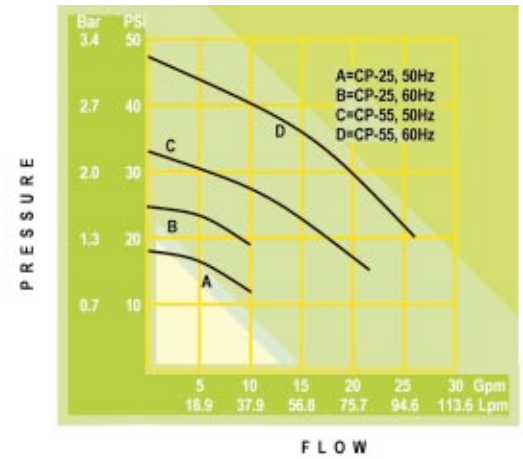

Positive Displacement & Turbine Pump Capacity

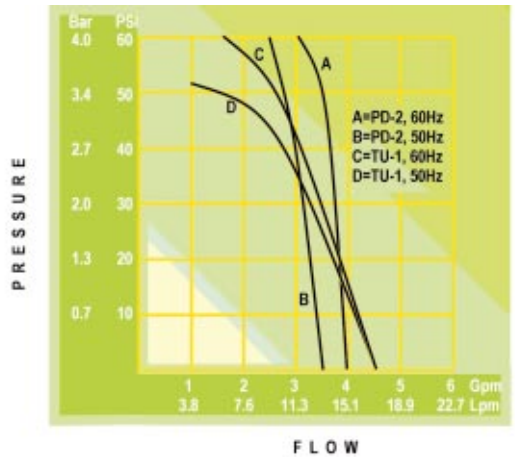

Recirculating Chiller Specifications

MODEL	HX-300	HX-500
TEMPERATURE RANGE	+5°C to +35°C	+5°C to +35°C
TEMPERATURE STABILITY	±0.1°C	±0.1°C
COOLING CAPACITY		
60 Hz Models	10000 Watts at 20°C 34100 BTU/hr at 20°C 8593 Kcal/hr at 20°C	15700 Watts at 20°C 53500 BTU/hr at 20°C 13502 Kcal/hr at 20°C
50 Hz Models	8300 Watts at 20°C 28303 BTU/hr at 20°C 7132 Kcal/hr at 20°C	13030 Watts at 20°C 44430 BTU/hr at 20°C 11206 Kcal/hr at 20°C
PUMP	Specify from pump graphs	Specify from pump graphs
RESERVOIR VOLUME		
Gallons/Liters:	15/56.8	28/106
DIMENSIONS (H x W x D) In.	$45^{7/8}$ x $33^{3/4}$ x $25^{1/4}$	$50^{5/8}$ x 46 x $28^{3/4}$
Cm.	116.5 x 85.7 x 64.1	128.6 x 116.8 x 73
POWER REQUIREMENTS	208-230V, 60 Hz, 21 Amps 3Ø	208-230V, 60 Hz, 38 Amps 3Ø
50 Hz Models:	380-420V, 50 Hz, 12 Amps 3Ø	380-420V, 50 Hz, 17 Amps 3Ø
SHIPPING WEIGHT	477 Lbs/216.4 Kgs	746 Lbs/338.4 Kgs

Specifications listed for standard units circulating water at 20°C ambient. Specifications will be affected by changes in temperature, mbient, or coolant. Cooling capacity and amperage ratings based on units with CP-25 pump, may be affected by optional pumps. Specifications subject to change.

APPLICATIONS

- Lasers
- Process Cooling
- MRI
- Medical Lasers
- Linear Accelerators
- Diffusion Pumps
- Vacuum Systems
- Plasma Etch Equipment

ACCESSORIES

- External Pressure Reducer
- External Temp. Readout
- Plumbing Packages
- Circulating Hose
- Hose Insulation
- Algicide

Cooling Capacity

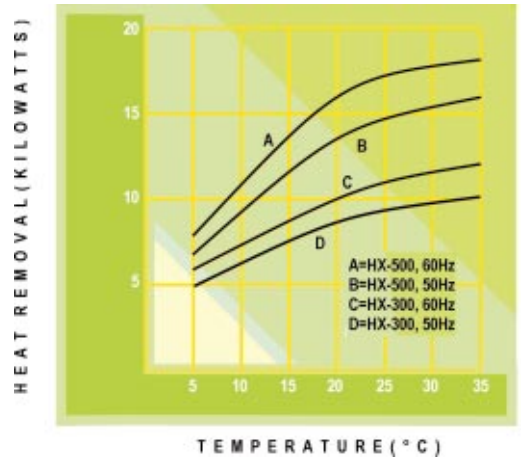

Turbine Pump Capacity

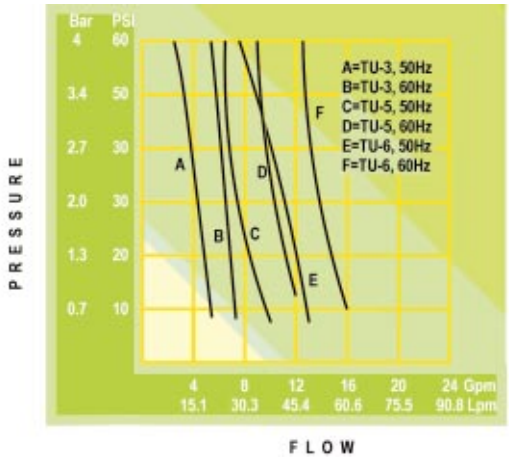

Centrifugal Pump Capacity

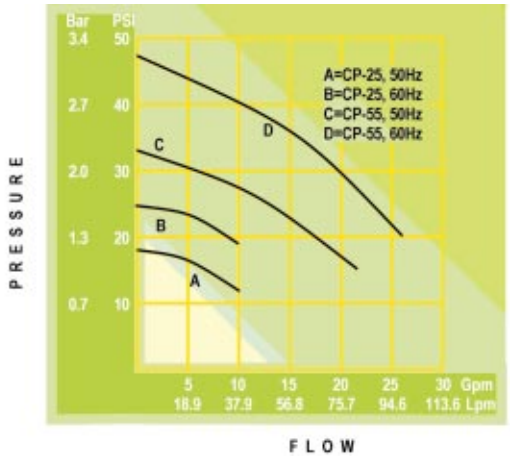

Recirculating Chiller Specifications

MODEL	HX-750	HX-900
TEMPERATURE RANGE	+5°C to +35°C	+5°C to +35°C
TEMPERATURE STABILITY	±0.1°C	±1.0°C
COOLING CAPACITY		
60 Hz Models	24000 Watts at 20°C 81840 BTU/hr at 20°C 20640 Kcal/hr at 20°C	38000 Watts at 25°C 129580 BTU/hr at 25°C 32760 Kcal/hr at 25°C
50 Hz Models	19920 Watts at 20°C 67925 BTU/hr at 20°C 17131 Kcal/hr at 20°C	31500 Watts at 25°C 107415 BTU/hr at 25°C 27155 Kcal/hr at 25°C
PUMP	Specify from pump graphs	CP-100 38 gpm @ 40 psi 60Hz CP-100 28 gpm @ 30 psi 50Hz
RESERVOIR VOLUME Gallons/Liters:	40/151.4	15/56.8
DIMENSIONS (H x W x D) In. Cm.	$63^{3/4}$ x46 x 29* 161.9 x 116.8 x 73.7*	$63^{3/4}$ x 46 x 29 161.9 x 116.8 x 73.7
POWER REQUIREMENTS 50 Hz Models:	208-230V, 60 Hz, 40 Amps 3Ø 380-420V, 50 Hz, 21 Amps 3Ø	208-230V, 60 Hz, 56 Amps 3Ø 380-420V, 50 Hz, 32 Amps 3Ø
SHIPPING WEIGHT	971 Lbs/440.4 Kgs	1250 Lbs/567 Kgs

Specifications listed for standard units circulating water at 20°C ambient. Specifications will be affected by changes in temperature, ambient, or coolant. Cooling capacity and amperage ratings based on units with CP-25 pump, may be affected by optional pumps.
*Water cooled dimensions same as HX-500. Specifications subject to change.

APPLICATIONS

- Lasers
- Process Cooling
- MRI
- NMR Magnet
- Vacuum Systems
- Plasma Etch Equipment
- Sputtering Systems
- Power Supplies

Cooling Capacity

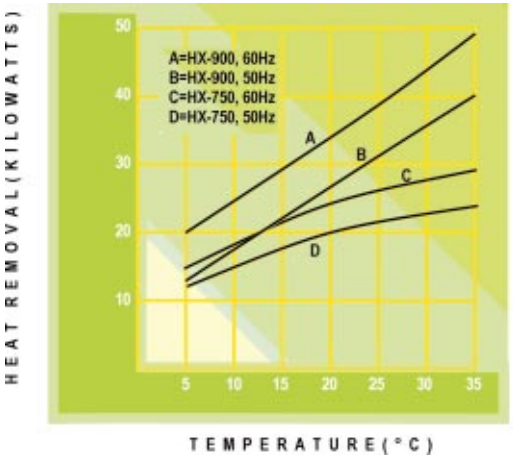

Turbine Pump Capacity

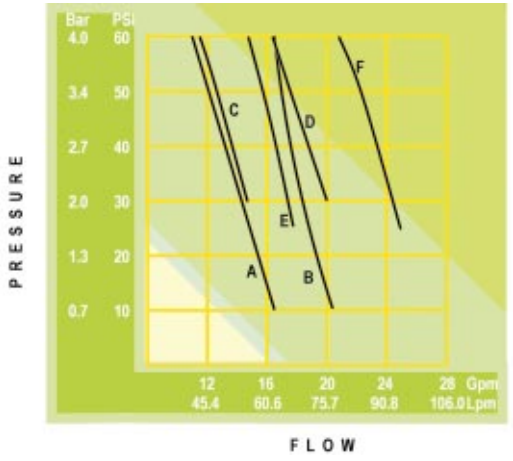

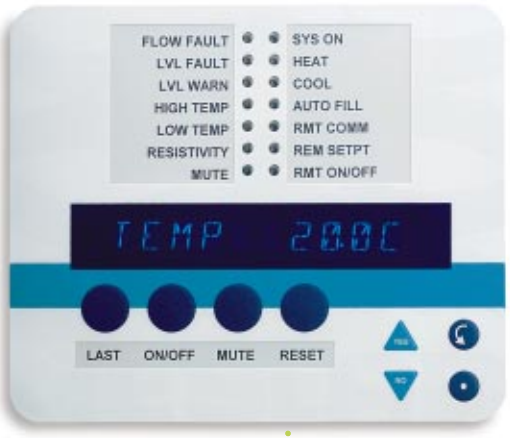

TC-400 Temperature Controller

A fully programmable, self-diagnostic microprocessor controller featuring:

- Recirculating fluid and setpoint temperature to a 1°C resolution
- Process flow rate readout
- Low level, high temperature, low temperature, and low flow fault with alarm
- User adjustable alarm limits
- Analog interface
- Remote sensor interface (remote sensor purchased separately)

Recirculating Chillers

HX Series - Indoor/Outdoor

NESLAB's HX-1000 and HX-2000 are high capacity chillers esigned for indoor or outdoor installation. The largest of our recir- ulating chiller family, these heavy duty, industrial units are ideal or replacing building water cooling of multiple systems, or for andling the heavy heat loads of high capacity lasers, medical maging equipment, and industrial processing equipment. In addi- ion to these applications, the HX-1000 and HX-2000 are ideal for aboratory or hospital/clinic settings when it is necessary to dis- harge heat outside.

A large industrial grade pump provides strong pressure for circulat- ing at distances, and excellent fluid agitation for temperature uniformity. A digital control box remotes by cable to a convenient internal location. It provides all of the features of our TC-400 including high temperature, low temperature, low flow, and low level safeties. The refrigeration system is controlled by our hot gas bypass, which eliminates compressor cycling on and off and greatly enhances compressor life.

Air Cooled Refrigeration
Two large condensing fans are mounted at the top of the units. They draw air through the system and discharge it at the top, and are completely self-contained and designed to withstand rain and harsh weather

Electrical Enclosure
The electrical components are designed to NEMA 4 Code for operational safety. All electronics are encased in a durable, locking enclosure for protection from tampering and outdoor conditions



Recirculating Chiller Specifications

Indoor/Outdoor

MODEL	HX-1000	HX-2000
TEMPERATURE RANGE	+10°C to +25°C	+10°C to +25°C
TEMPERATURE STABILITY	±1.0°C	±1.0°C
COOLING CAPACITY		
60 Hz Models	53000 Watts at 25°C 18730 BTU/hr at 25°C 45544 Kcal/hr at 25°C	75000 Watts at 25°C 255750 BTU/hr at 25°C 64450 Kcal/hr at 25°C
50 Hz Models	43990 Watts at 25°C 150005 BTU/hr at 25°C 37800 Kcal/hr at 25°C	62250 Watts at 25°C 212270 BTU/hr at 25°C 53490 Kcal/hr at 25°C
PUMP	CP-100	CP-100
RESERVOIR VOLUME Gallons/Liters:	14/53	14/53
DIMENSIONS (H x W x D) In. Cm.	$73^{1/2}$ x 58 x 30 186.7 X 147.3 X 76.2	76 x $67^{1/4}$ x 34 193 X 170.8 X 86.4
POWER REQUIREMENTS 50 Hz Models:	440-480V, 60 Hz, 33 Amps 3Ø 380-420V, 50 Hz, 30 Amps 3Ø	440-480V, 60 Hz, 58 Amps 3Ø 380-420V, 50 Hz, 40 Amps 3Ø
SHIPPING WEIGHT	1612 Lbs/731.2 Kgs	2061 Lbs/934.9 Kgs

Specifications listed for HX-1000 and HX-2000 circulating at 25°C, ambient 21°C, with 50% Ethylene Glycol as coolant. Specifications will be affected by changes in temperature, ambient, or fluids. Specifications subject to change.

FEATURES

- All weather design
- High capacity circulating pump
- NEMA 4 electrical enclosure
- Hot gas bypass system

APPLICATIONS

- Multiple Instruments Cooling
- Heat Exchangers
- Laser Cooling
- Semiconductor Equipment
- Plastic Molding & Extrusion

Cooling Capacity

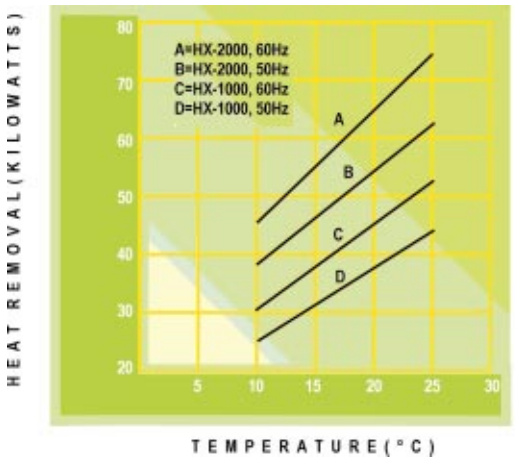

Pumping Capacity

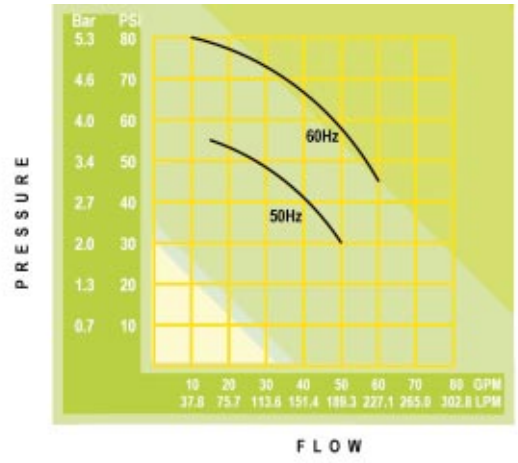

Recirculating Chillers

HX Series - Low Temperature

The HX -540 low temperature chiller is ideal for applications equiring high heat removal at low temperatures. Typically, a low emperature/high heat removal chiller would require a large case to accommodate the special components needed. NESLAB's years of experience in chiller technology has enabled us to offer this chiller n an extremely compact size. Feel free to compare to the compe- ition. Standard features include a stainless steel reservoir, plate style heat exchanger, NEMA 4 electrical enclosure, and hot gas bypass temperature control. The sophisticated TC400 micro- processor controller monitors all chiller functions as well as provid- ing fluid safeties such as low reservoir liquid level, high and low temperature overshoot, and low flow. The TC400 even provides a recirculating flow readout in gallons or liter per minute, you choose. The HX-540 is perfect for use in a variety of applications. Reaction vessels in the chemical and pharmaceutical industries, quenching of cables in the fiber optics industry, and many chip manufacturing and testing processes in the semiconductor industry are just a few of the many applications where the HX-540 has become useful.

Compact Design
Maximizes use of limited floor space



Safety Certifications
NEMA 4 electrical enclosure for safety and reliability

Recirculating Chiller Specifications

Low Temp

MODEL	HX-540
TEMPERATURE RANGE	-40°C to +25°C
TEMPERATURE STABILITY	±0.5°C
COOLING CAPACITY 60 Hz Models	7500 Watts at -20°C 25575 BTU/hr at -20°C
50 Hz Models	6000 Watts at -20°C 20460 BTU/hr at -20°C
PUMP 50Hz Models	TU-3/6 gpm, 65 psi 18.8 Lpm, 3.1 bar
RESERVOIR VOLUME Gallons/Liters:	5/18.4
DIMENSIONS (H x W x D) In. Cm.	44 x 34 x $25^{1/2}$ 111.8 x 86.4 x 64.8 add 9in (22.8 cm) to depth for electrical enclosure
POWER REQUIREMENTS 50 Hz Models:	440-480V, 60 Hz, 15 Amps 3Ø 380-420V, 50 Hz, 17 Amps 3Ø
SHIPPING WEIGHT	915 Lbs/415 Kgs

Specifications listed for units circulating 60% Ethylene Glycol, 20% water, and fluid with specific heat of .6. Specifications will be affected by changes in temperature, ambient or fluids. Specifications subject to change.

FEATURES

- High cooling capacity at low temperatures
- Semi-hermetic compressor
- High pressure circulating pump
- Designed for 24 hour, continuous duty
- Hot gas bypass system
- Water cooled condenser

APPLICATIONS

- Plasma Etch Chamber
- Quenching Fiber Optics Cables
- Chemical and Organic Reactions
- Gallium Arsenide Crystal Growth
- Molecular Beam Epitaxy

Cooling Capacity

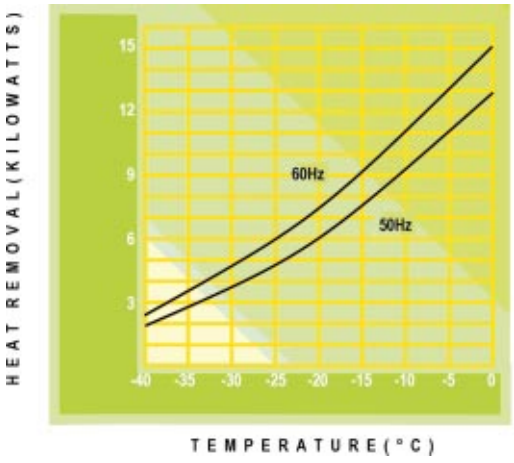

Pumping Capacity

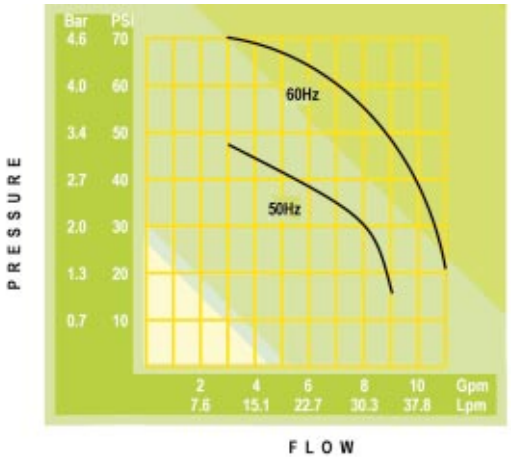

Recirculating Chillers

Custom Configurations

Many customization options are available on the HX and CFT Series Chillers. Below are just a few. If you do not see what you need, contact one of our Applications Engineers. Chances are we have the option available to suit your application.

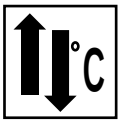

Extended Temperature Range

Feature will allow you to set a circulating temperature outside of the range of the standard model.

Stainless Steel/Plastic Unit

Recirculating Chiller features stainless steel and plastic components to provide fluid compatibility for your sensitive circulating applications.



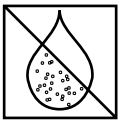

Deionization Package

We will install a purification system for standard ultra pure circulating requirements.

Custom Electrical

Recirculating Chiller can be wired for a variety of AC power sources.





Safety Interlocks

Recirculating Chiller warns of situations outside of your set specifications. Monitor flow, liquid level or low/high temperature.

Safety Certifications

Units can be customized with certified components and electrical designs to meet the safety requirements set by the following internationally recognized standards.

CSA

We have been granted the Category Certification Program for the Canadian Standards Association, complying to CSA 1010.1 for all products.

CE

All units destined for Europe are tested for compliance to the EMC and LVD directives. NESLAB's in-house EMC lab is assessed by Interference Technologies International, Ltd., as a supplier of EMC testing services.

IEC

Many of our Recirculating Chiller designs meet the rigorous European safety standards of IEC 1010 or IEC 10601, and are certified through the TUV Testing Agency.

UL

NESLAB has been granted the Client Test Data Program for the Underwriters Laboratories, and is certified to provide UL testing in-house for Commercial Processing Chiller UL 471, Medical Electrical Equipment Component UL 2601-1, and Laboratory Electrical Equipment UL 3101-1.

IBM Safety Specification

NESLAB has been designing units which conform to the IBM safety spec on recirculating chillers since 1972. This option includes NEMA 12 enclosure and emergency off.

Semi S2-93

Our semiconductor chillers are designed and tested to comply with Semi S2-93 safety guidelines for semiconductor manufacturing equipment. These guidelines apply to equipment used in the manufacturing, metrology, assembly, and testing of semiconductor products.

Recirculating Chillers *Accessories*

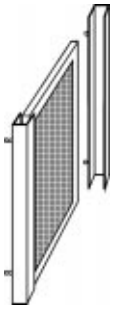

Air Filter Package

Snap on air filter protects chillers with air cooled condensers from damage and prevents loss of performance in dusty or unclean environments.

For Models

All CFT Series chillers and HX-75 through HX-750 Series chillers with air cooled condensers



Tubing Package

Tygon and silicon tubing available for air or water lines, fluids handling, and drainage procedures. Tygon tubing is a durable choice for applications requiring near ambient temperature ranges. Silicon tubing is available for dependable circulation at very low temperature ranges.

For Models

All CFT and HX Series chillers System Series water to water heat exchangers
All Bath/Circulators



Algicide

Chloramin-T Algicide eliminates the growth of algae in water baths, circulators, chillers, and other laboratory apparatus. The 250 gram bottle contains enough algicide to treat 1000 liters of water.

For Models

All CFT and HX Series chillers System Series water to water heat exchangers
All Bath/Circulators

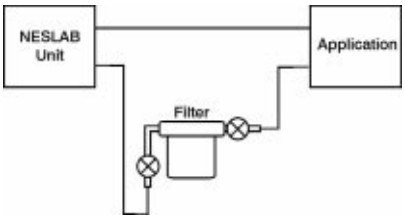

Particulate Filter Package

Can be used on the process side or on the facility side in our water cooled condenser models to protect your equipment and chiller from harmful particulates. Available in 5, 10, 25, or 40 micron sizes, partial or full flow

For Models

All CFT and HX Series chillers System Series water to water heat exchangers

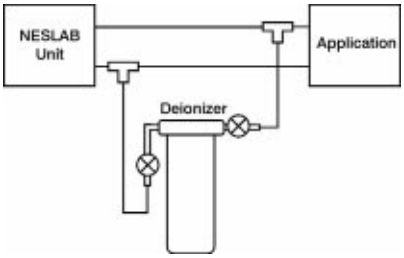

Deionized Water Package

Partial flow system maintains resistivity levels between 1 and 3 meg-ohm/cm. Available with a cartridge change indicator light. Also compatible with NESLAB's optional resistivity readout.

For Models

All CFT and HX Series chillers System Series water to water heat exchangers



Recirculating Chillers

NESLAB chillers are world-renowned for their quality and reliability. For over 35 years, NESLAB has been the industry leader in innovation and dependability making our equipment the preferred chiller for the majority of companies world-wide. The use of hot gas bypass temperature control in a chiller, today's industry standard, was developed by NESLAB. Forward thinking concepts like this, along with superior performance, make NESLAB chillers the number one choice to cool your valuable equipment, improve your processes, and save on costly tap water usage.

Recirculating *Chillers*

Using a chiller for your water cooled equipment is a wise decision for many reasons. Your valuable equipment needs to operate at its maximum level of performance. Cooling with tap water, tower water, and building chilled water can prove unreliable or cause problems. Fluctuations in temperature, pressure, and flow, as well as minerals and particulates, can produce unreliable results and damage to your equipment. A NESLAB chiller will eliminate all of these problems and save you money. Running tap water through your equipment or process is very expensive. You pay twice for the use of water. Running 4 gallons of water, 24 hours per day, 7 days a week, 52 weeks per year can potentially send 2,000,000 gallons of water down the drain per year. As you can see, by recirculating, a NESLAB chiller can pay for itself in a very short time.



Deciding on which NESLAB chiller to use is simple. Use our easy to read charts on the following pages to determine which model best suits your needs. What is your heat load requirement? What temperature do you need to circulate? What is your flow and pressure need? Do you need a simple workhorse chiller or a highly sophisticated chiller? If you are not sure of your equipment's water cooling requirements or need advice on how to best utilize our chiller, call our Applications Engineers. We have extensive cross reference information on most equipment and the experience to advise you on which NESLAB chiller will meet your needs exactly.

NESLAB is the industry leader in chiller design and innovation. We were the first to use the hot gas bypass method of temperature control in a chiller. It is now considered the industry standard. Hot gas bypass works by routing the hot, uncondensed refrigerant back through the reservoir coil when heating is needed. This eliminates on/off cycling of compressors and the addition of energy-wasting heater. You get better temperature control, greater energy efficiency, and increased compressor life.





NESLAB also introduced the industry's first completely CFC-free portable chiller in our CFT Series. We feel a responsibility to use the most environmentally friendly refrigerants available. Our HX Series uses an HCFC refrigerant which is universally accepted as an environmentally friendly alternative to CFC's.

Which chiller series should you use?

CFT Series

Heat removal capabilities from 580 watts to 11,000 watts. Basic, simple, a dependable performer.

(Pages 33-34)

HX Series

Heat removal capabilities from 2000 watts to 75,000 watts. Many pumps, controllers, and hundreds of options available.

(Pages 35-42)

System Series

Complete, packaged, Water to Water Heat Exchangers with built-in pump and temperature controller.

(Pages 45-48)

Recirculating Chillers - CFT Series

As the original designer of the small portable chiller, NESLAB ntroduced the CFT Series to cool precise analytical equipment. t now cools virtually every water cooled application including lab- ratory, medical, semiconductor, industrial, and laser industries. This tried and true design has made the CFT Series the number one hoice among equipment manufacturers. The heart of the CFT Series is the CFC-free refrigeration system which provides long ife, maintenance free operation. All CFT Series chillers also fea- ure a rugged, sealed PVC reservoir. The sealed design minimizes luid evaporation and eliminates maintenance allowing you to focus n your work instead of the chiller. The sealed reservoir also llows circulation to an open container; something not possible with an unsealed reservoir, adding to the versatility of your CFT. n addition, the CFT Series incorporates a built-in fluid bypass system to protect the chiller in the event of an external line blockage. The standard digital microprocessor controller shows the recirculating temperature and the setpoint to a resolution of 1°C, and maintains the recirculating temperature to ±0.5°C of the setpoint. Should you be concerned about protecting your equipment or your CFT, we have included a user adjustable high and low temperature limit safety, displaying the error should the chiller reach one of these limits. If you have special cooling water requirements for your application, chances are we can meet your needs with one of the many options available. High and low temperature ranges, condenser air filter packages, deionized water packages and convenient accessories such as tubing and fluids make the CFT Series the perfect choice for your liquid temperature control needs.



Microprocessor Controller
Provides a readout and setpoint resolution of 1°C and maintains a stability of ±0.5°C

Compact Design
Maximizes use of limited floor space



Removable Condenser Vent
Quick, easy access to the condenser for routine cleaning. Also simplifies installation of our accessory air filter package

Recirculating Chiller Specifications

MODEL	CFT-25	CFT-33	CFT-75	CFT-150	CFT-300
TEMPERATURE RANGE	+5°C to +30°C	+5°C to +30°C	+5°C to +30°C	+5°C to +35°C	+5°C to +35°C
TEMPERATURE STABILITY	±0.5°C	±0.5°C	±0.5°C	±0.5°C	±1.0°C
COOLING CAPACITY					
60 Hz Models	580 Watts at 20°C 1978 BTU/hr at 20°C 499 Kcal/hr at 20°C	950 Watts at 20°C 3240 BTU/hr at 20°C 817 Kcal/hr at 20°C	2100 Watts at 20°C 7161 BTU/hr at 20°C 1806 Kcal/hr at 20°C	4500 Watts at 20°C 15345 BTU/hr at 20°C 3870 Kcal/hr at 20°C	10650 Watts at 20°C 36315 BTU/hr at 20°C 9181 Kcal/hr at 20°C
50 Hz Models	475 Watts at 20°C 1620 BTU/hr at 20°C 408 Kcal/hr at 20°C	1000 Watts at 20°C 3410 BTU/hr at 20°C 860 Kcal/hr at 20°C	1900 Watts at 20°C 6485 BTU/hr at 20°C 1634 Kcal/hr at 20°C	3735 Watts at 20°C 12735 BTU/hr at 20°C 3212 Kcal/hr at 20°C	9000 Watts at 20°C 30690 BTU/hr at 20°C 7759 Kcal/hr at 20°C
PUMP	MD-30*/PD-1	PD-1/PD-2	PD-1/PD-2	PD-2/CP-55	PD-2/CP-55
RESERVOIR VOLUME Gallons/Liters:	.375/1.4	1.1/4.2	1.8/6.8**	5.625/21.29	5.625/21.29
DIMENSIONS (H x W x D) In.	22 x $12^{1/2}$ x 21	$24^{1/2}$ x $14^{3/4}$ x 22	$26^{1/2}$ x $14^{7/8}$ x $24^{1/2}$	$36^{3/4}$ x $21^{3/8}$ x $27^{3/4}$	43 x $25^{1/2}$ x $27^{3/4}$
Cm.	55.9 x 31.8 x 53.34	62.2 x 37.5 x 55.9	67.3 x 37.8 x 62.2	93.3 x 54.3 x 70.5	109.2 x 64.8 x 70.5
POWER REQUIREMENTS 50 Hz Models:	115V, 60 Hz, 10 Amps 220-240V, 50 Hz, 6 Amps	115V, 60 Hz, 13 Amps 220-240V, 50 Hz, 7 Amps	208-230V, 60 Hz, 9 Amps 220-240V, 50 Hz, 10 Amps	208-230V, 60 Hz, 13 Amps 220-240V, 50 Hz, 12 Amps	208-230V, 60 Hz, 3Ø 380V, 50 Hz, 3Ø
SHIPPING WEIGHT	132 Lbs/59.9 Kgs	160 Lbs/72.6 Kgs	215 Lbs/97.5 Kgs	311 Lbs/141.1 Kgs	450 Lbs/204.1 Kgs

Specifications listed for standard units circulating water at 20°C ambient. Performance specifications will be affected by changes in temperature, ambient or coolant. *Standard circulating pump for 50Hz models is PD-1. **1.25 gallons/4.73 liters for 50Hz units. Specifications subject to change.

Cooling Capacity

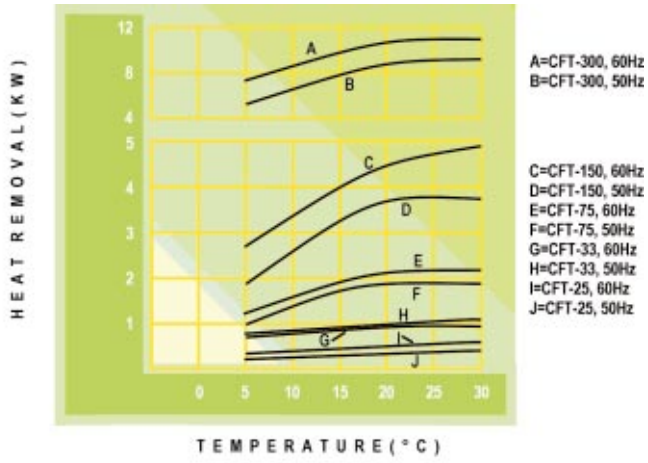

Magnetic Drive Pump Capacity

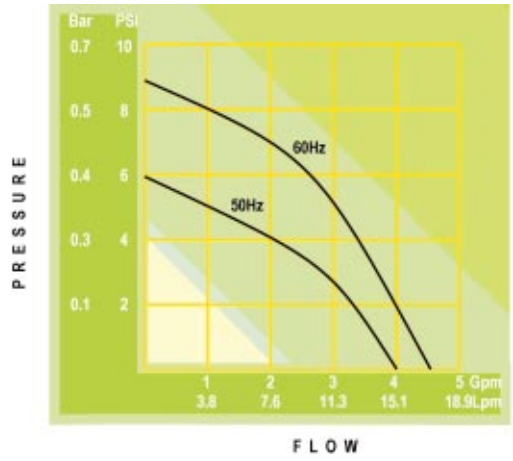

Positive Displacement Pump Capacity

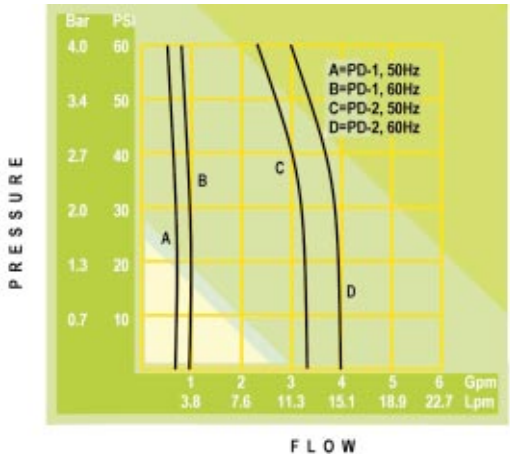

APPLICATIONS

- Condenser Cooling
- Diffusion Pumps
- Turbo-Molecular Pumps
- Vacuum Systems
- GC/MS
- Lasers
- Electron Microscopes
- ICP
- FTIR
- Plasma Etch Equipment
- Sputtering Systems
- AA Graphite Furnace
- Resistance Welders

Recirculating Chillers - HX Series

The HX Series of chillers are NESLAB's versatile, highly configrable chiller series that can go from a simple workhorse to a highly ophisticated chiller via the many options available. This makes it erfectly suitable for use in laboratory, laser, industrial, semiconuctor, or medical applications. Since its introduction in the late ixties, the HX Series has undergone continuous design enhancements and improvements. But, some things haven't changed for ver 35 years; dependable performance, use of the highest quality materials, and a design that will be trouble free for many years.

Your HX chiller is a solid investment to protect and maximize the performance of your valuable equipment. The HX Series comes in a variety of standard configurations. To meet your needs exactly, we offer choices of controllers, pumps, temperature ranges, and condenser designs. If you're not sure which version would be the most suitable for your application, contact one of our Applications Engineers. They have the expertise necessary to make the perfect recommendation.

Easy Access
Hinged top opens for easy access to internal components



Digital Temperature Controller
An LED readout displays recirculating temperature and setpoint, both with a resolution of 1°C. A low liquid level indicator guards against fluid evaporation or circulating leaks. Idle and Cool lights are essential for diagnostics and operating status.

TC-400 Temperature Controller
A fully programmable, self-diagnostic microprocessor controller featuring:

- Recirculating fluid and setpoint temperature to a 1°C resolution
- Process flow rate readout
- Low level, high temperature, low temperature, and low flow fault with alarm
- User adjustable alarm limits
- Analog interface
- Remote sensor interface (remote sensor purchased separately)

Options include:

- Remote sensor
- Remote controller
- Resistivity display for deionized water applications
- RS-232 or RS-485 serial communications interface
- 0.1°C temperature resolution

Smart Design
Stainless steel reservoir and heat exchanger ensures fluid compatibility

Reservoir drain for quick fluid changes

Recirculating Chiller Specifications

MODEL	HX-75	HX-150
TEMPERATURE RANGE	+5°C to +35°C	+5°C to +35°C
TEMPERATURE STABILITY	±0.1°C	±0.1°C
COOLING CAPACITY		
60 Hz Models	2000 Watts at 20°C 6820 BTU/hr at 20°C 1720 Kcal/hr at 20°C	4500 Watts at 20°C 15345 BTU/hr at 20°C 3870 Kcal/hr at 20°C
50 Hz Models	1660 Watts at 20°C 5660 BTU/hr at 20°C 1428 Kcal/hr at 20°C	3735 Watts at 20°C 12735 BTU/hr at 20°C 3212 Kcal/hr at 20°C
PUMP	Specify from pump graphs	Specify from pump graphs
RESERVOIR VOLUME		
Gallons/Liters:	5/18.9	8/30.3
DIMENSIONS (H x W x D) In.	$35^{3/4}$ x $23^{1/4}$ x $18^{3/4}$	$39^{5/8}$ x $26^{1/4}$ x $21^{1/8}$
Cm.	90.8 x 59.0 x 47.6	100.6 x 66.7 x 53.7
POWER REQUIREMENTS	208-230V, 60 Hz, 12 Amps	208-230V, 60 Hz, 17 Amps
50 Hz Models:	220-240V, 50 Hz, 11 Amps	220-240V, 50 Hz, 14 Amps
SHIPPING WEIGHT	261 Lbs/118.4 Kgs	320 Lbs/145.2 Kgs

Specifications listed for standard units circulating water at 20°C ambient. Performance specifications will be affected by changes in temperature, ambient or coolant. Cooling capacity and amperage ratings based on units with CP-25 pump, may be affected by optional pumps. Specifications subject to change.

APPLICATIONS

- Lasers
- Process Cooling
- Medical Lasers
- Linear Accelerators
- Diffusion Pumps
- Turbo-Molecular Pumps
- Vacuum Systems
- Plasma Etch Equipment
- Sputtering Systems

ACCESSORIES

- External Pressure Reducer
- External Temperature Readout
- Plumbing Packages
- Circulating Hose
- Hose Insulation

Cooling Capacity

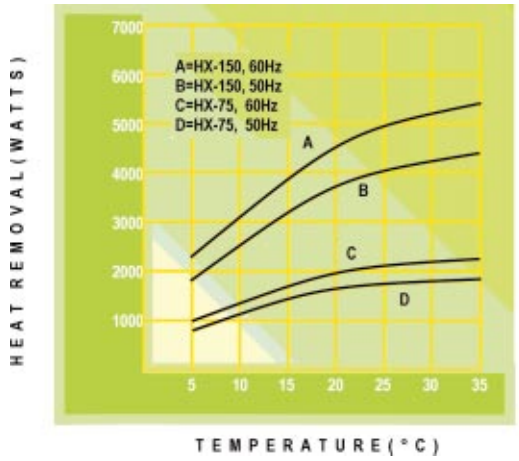

Centrifugal Pump Capacity

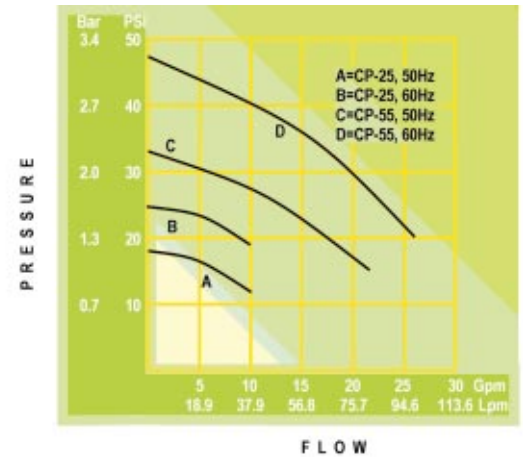

Positive Displacement & Turbine Pump Capacity

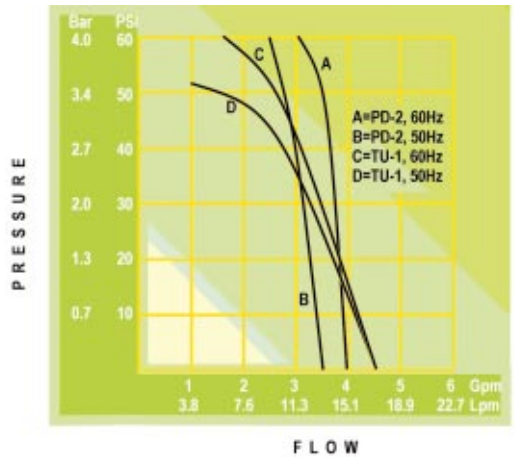

Recirculating Chiller Specifications

MODEL	HX-300	HX-500
TEMPERATURE RANGE	+5°C to +35°C	+5°C to +35°C
TEMPERATURE STABILITY	±0.1°C	±0.1°C
COOLING CAPACITY		
60 Hz Models	10000 Watts at 20°C 34100 BTU/hr at 20°C 8593 Kcal/hr at 20°C	15700 Watts at 20°C 53500 BTU/hr at 20°C 13502 Kcal/hr at 20°C
50 Hz Models	8300 Watts at 20°C 28303 BTU/hr at 20°C 7132 Kcal/hr at 20°C	13030 Watts at 20°C 44430 BTU/hr at 20°C 11206 Kcal/hr at 20°C
PUMP	Specify from pump graphs	Specify from pump graphs
RESERVOIR VOLUME		
Gallons/Liters:	15/56.8	28/106
DIMENSIONS (H x W x D) In.	$45^{7/8}$ x $33^{3/4}$ x $25^{1/4}$	$50^{5/8}$ x 46 x $28^{3/4}$
Cm.	116.5 x 85.7 x 64.1	128.6 x 116.8 x 73
POWER REQUIREMENTS	208-230V, 60 Hz, 21 Amps 3Ø	208-230V, 60 Hz, 38 Amps 3Ø
50 Hz Models:	380-420V, 50 Hz, 12 Amps 3Ø	380-420V, 50 Hz, 17 Amps 3Ø
SHIPPING WEIGHT	477 Lbs/216.4 Kgs	746 Lbs/338.4 Kgs

Specifications listed for standard units circulating water at 20°C ambient. Specifications will be affected by changes in temperature, mbient, or coolant. Cooling capacity and amperage ratings based on units with CP-25 pump, may be affected by optional pumps. Specifications subject to change.

APPLICATIONS

- Lasers
- Process Cooling
- MRI
- Medical Lasers
- Linear Accelerators
- Diffusion Pumps
- Vacuum Systems
- Plasma Etch Equipment

ACCESSORIES

- External Pressure Reducer
- External Temp. Readout
- Plumbing Packages
- Circulating Hose
- Hose Insulation
- Algicide

Cooling Capacity

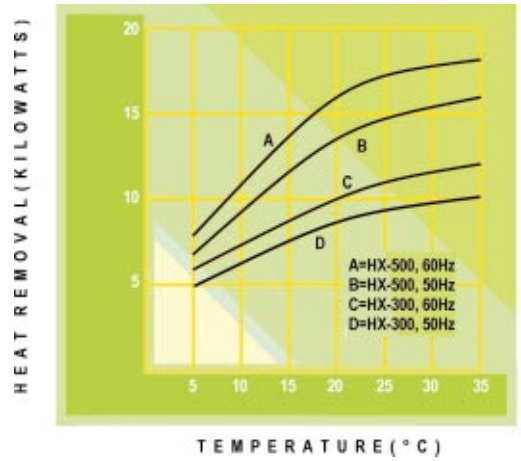

Turbine Pump Capacity

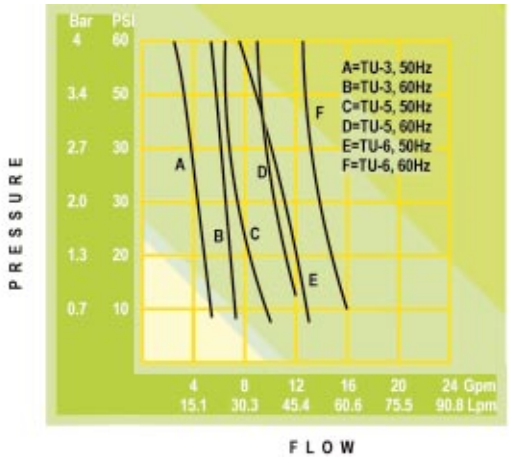

Centrifugal Pump Capacity

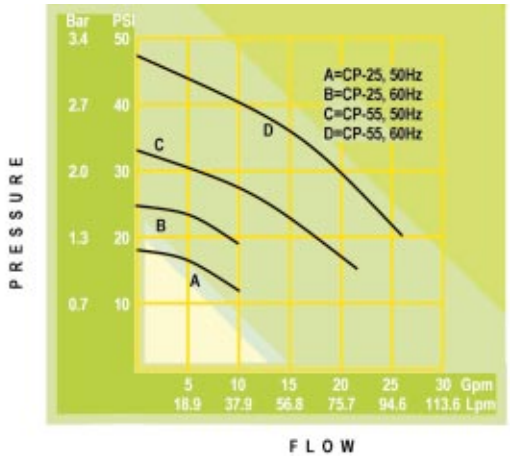

Recirculating Chiller Specifications

MODEL	HX-750	HX-900
TEMPERATURE RANGE	+5°C to +35°C	+5°C to +35°C
TEMPERATURE STABILITY	±0.1°C	±1.0°C
COOLING CAPACITY		
60 Hz Models	24000 Watts at 20°C 81840 BTU/hr at 20°C 20640 Kcal/hr at 20°C	38000 Watts at 25°C 129580 BTU/hr at 25°C 32760 Kcal/hr at 25°C
50 Hz Models	19920 Watts at 20°C 67925 BTU/hr at 20°C 17131 Kcal/hr at 20°C	31500 Watts at 25°C 107415 BTU/hr at 25°C 27155 Kcal/hr at 25°C
PUMP	Specify from pump graphs	CP-100 38 gpm @ 40 psi 60Hz CP-100 28 gpm @ 30 psi 50Hz
RESERVOIR VOLUME Gallons/Liters:	40/151.4	15/56.8
DIMENSIONS (H x W x D) In. Cm.	$63^{3/4}$ x46 x 29* 161.9 x 116.8 x 73.7*	$63^{3/4}$ x 46 x 29 161.9 x 116.8 x 73.7
POWER REQUIREMENTS 50 Hz Models:	208-230V, 60 Hz, 40 Amps 3Ø 380-420V, 50 Hz, 21 Amps 3Ø	208-230V, 60 Hz, 56 Amps 3Ø 380-420V, 50 Hz, 32 Amps 3Ø
SHIPPING WEIGHT	971 Lbs/440.4 Kgs	1250 Lbs/567 Kgs

Specifications listed for standard units circulating water at 20°C ambient. Specifications will be affected by changes in temperature, ambient, or coolant. Cooling capacity and amperage ratings based on units with CP-25 pump, may be affected by optional pumps.
*Water cooled dimensions same as HX-500. Specifications subject to change.

APPLICATIONS

- Lasers
- Process Cooling
- MRI
- NMR Magnet
- Vacuum Systems
- Plasma Etch Equipment
- Sputtering Systems
- Power Supplies

Cooling Capacity

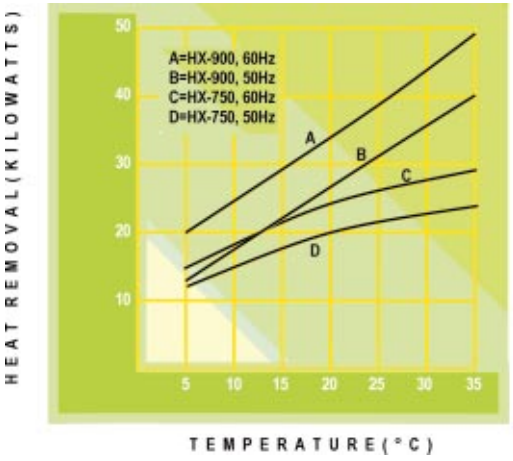

Turbine Pump Capacity

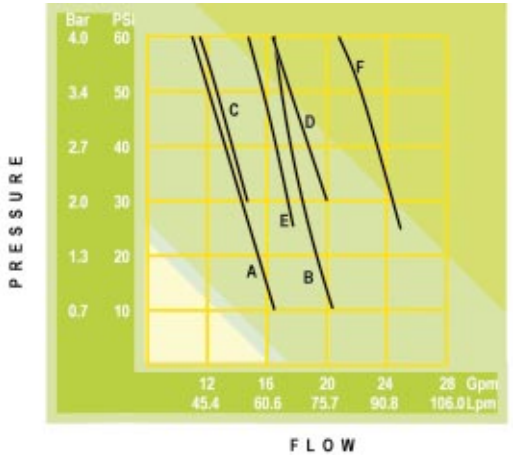

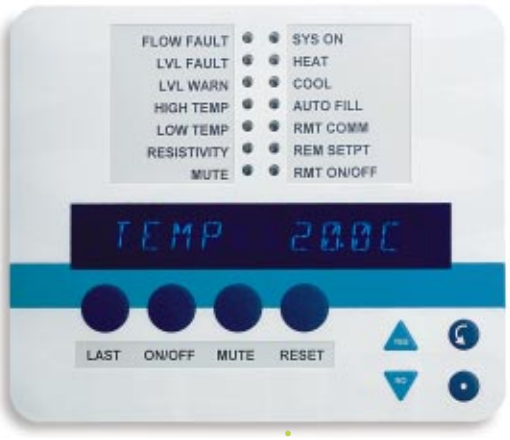

TC-400 Temperature Controller

A fully programmable, self-diagnostic microprocessor controller featuring:

- Recirculating fluid and setpoint temperature to a 1°C resolution
- Process flow rate readout
- Low level, high temperature, low temperature, and low flow fault with alarm
- User adjustable alarm limits
- Analog interface
- Remote sensor interface (remote sensor purchased separately)

Recirculating Chillers

HX Series - Indoor/Outdoor

NESLAB's HX-1000 and HX-2000 are high capacity chillers esigned for indoor or outdoor installation. The largest of our recir- ulating chiller family, these heavy duty, industrial units are ideal or replacing building water cooling of multiple systems, or for andling the heavy heat loads of high capacity lasers, medical maging equipment, and industrial processing equipment. In addi- ion to these applications, the HX-1000 and HX-2000 are ideal for aboratory or hospital/clinic settings when it is necessary to dis- harge heat outside.

A large industrial grade pump provides strong pressure for circulat- ing at distances, and excellent fluid agitation for temperature uniformity. A digital control box remotes by cable to a convenient internal location. It provides all of the features of our TC-400 including high temperature, low temperature, low flow, and low level safeties. The refrigeration system is controlled by our hot gas bypass, which eliminates compressor cycling on and off and greatly enhances compressor life.

Air Cooled Refrigeration
Two large condensing fans are mounted at the top of the units. They draw air through the system and discharge it at the top, and are completely self-contained and designed to withstand rain and harsh weather

Electrical Enclosure
The electrical components are designed to NEMA 4 Code for operational safety. All electronics are encased in a durable, locking enclosure for protection from tampering and outdoor conditions



Recirculating Chiller Specifications

Indoor/Outdoor

MODEL	HX-1000	HX-2000
TEMPERATURE RANGE	+10°C to +25°C	+10°C to +25°C
TEMPERATURE STABILITY	±1.0°C	±1.0°C
COOLING CAPACITY		
60 Hz Models	53000 Watts at 25°C 18730 BTU/hr at 25°C 45544 Kcal/hr at 25°C	75000 Watts at 25°C 255750 BTU/hr at 25°C 64450 Kcal/hr at 25°C
50 Hz Models	43990 Watts at 25°C 150005 BTU/hr at 25°C 37800 Kcal/hr at 25°C	62250 Watts at 25°C 212270 BTU/hr at 25°C 53490 Kcal/hr at 25°C
PUMP	CP-100	CP-100
RESERVOIR VOLUME Gallons/Liters:	14/53	14/53
DIMENSIONS (H x W x D) In. Cm.	$73^{1/2}$ x 58 x 30 186.7 X 147.3 X 76.2	76 x $67^{1/4}$ x 34 193 X 170.8 X 86.4
POWER REQUIREMENTS 50 Hz Models:	440-480V, 60 Hz, 33 Amps 3Ø 380-420V, 50 Hz, 30 Amps 3Ø	440-480V, 60 Hz, 58 Amps 3Ø 380-420V, 50 Hz, 40 Amps 3Ø
SHIPPING WEIGHT	1612 Lbs/731.2 Kgs	2061 Lbs/934.9 Kgs

Specifications listed for HX-1000 and HX-2000 circulating at 25°C, ambient 21°C, with 50% Ethylene Glycol as coolant. Specifications will be affected by changes in temperature, ambient, or fluids. Specifications subject to change.

FEATURES

- All weather design
- High capacity circulating pump
- NEMA 4 electrical enclosure
- Hot gas bypass system

APPLICATIONS

- Multiple Instruments Cooling
- Heat Exchangers
- Laser Cooling
- Semiconductor Equipment
- Plastic Molding & Extrusion

Cooling Capacity

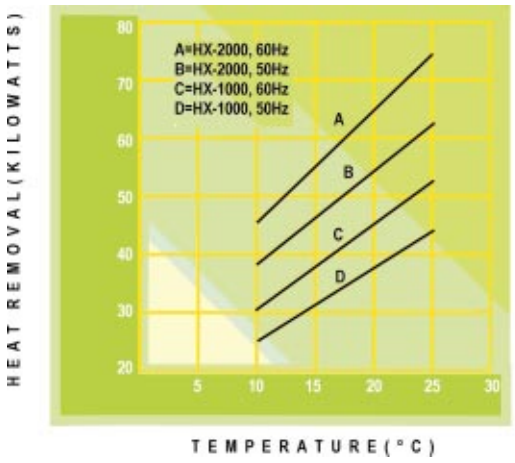

Pumping Capacity

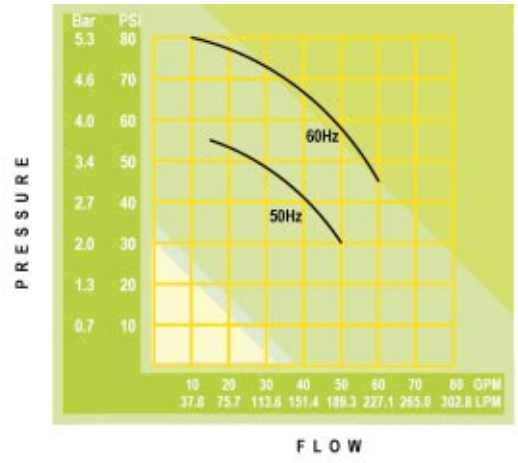

Recirculating Chillers

HX Series - Low Temperature

The HX -540 low temperature chiller is ideal for applications equiring high heat removal at low temperatures. Typically, a low emperature/high heat removal chiller would require a large case to accommodate the special components needed. NESLAB's years of experience in chiller technology has enabled us to offer this chiller n an extremely compact size. Feel free to compare to the compe- ition. Standard features include a stainless steel reservoir, plate style heat exchanger, NEMA 4 electrical enclosure, and hot gas bypass temperature control. The sophisticated TC400 micro- processor controller monitors all chiller functions as well as provid- ing fluid safeties such as low reservoir liquid level, high and low temperature overshoot, and low flow. The TC400 even provides a recirculating flow readout in gallons or liter per minute, you choose. The HX-540 is perfect for use in a variety of applications. Reaction vessels in the chemical and pharmaceutical industries, quenching of cables in the fiber optics industry, and many chip manufacturing and testing processes in the semiconductor industry are just a few of the many applications where the HX-540 has become useful.

Compact Design
Maximizes use of limited floor space



Safety Certifications
NEMA 4 electrical enclosure for safety and reliability

Recirculating Chiller Specifications

Low Temp

MODEL	HX-540
TEMPERATURE RANGE	-40°C to +25°C
TEMPERATURE STABILITY	±0.5°C
COOLING CAPACITY 60 Hz Models	7500 Watts at -20°C 25575 BTU/hr at -20°C
50 Hz Models	6000 Watts at -20°C 20460 BTU/hr at -20°C
PUMP 50Hz Models	TU-3/6 gpm, 65 psi 18.8 Lpm, 3.1 bar
RESERVOIR VOLUME Gallons/Liters:	5/18.4
DIMENSIONS (H x W x D) In. Cm.	44 x 34 x $25^{1/2}$ 111.8 x 86.4 x 64.8 add 9in (22.8 cm) to depth for electrical enclosure
POWER REQUIREMENTS 50 Hz Models:	440-480V, 60 Hz, 15 Amps 3Ø 380-420V, 50 Hz, 17 Amps 3Ø
SHIPPING WEIGHT	915 Lbs/415 Kgs

Specifications listed for units circulating 60% Ethylene Glycol, 20% water, and fluid with specific heat of .6. Specifications will be affected by changes in temperature, ambient or fluids. Specifications subject to change.

FEATURES

- High cooling capacity at low temperatures
- Semi-hermetic compressor
- High pressure circulating pump
- Designed for 24 hour, continuous duty
- Hot gas bypass system
- Water cooled condenser

APPLICATIONS

- Plasma Etch Chamber
- Quenching Fiber Optics Cables
- Chemical and Organic Reactions
- Gallium Arsenide Crystal Growth
- Molecular Beam Epitaxy

Cooling Capacity

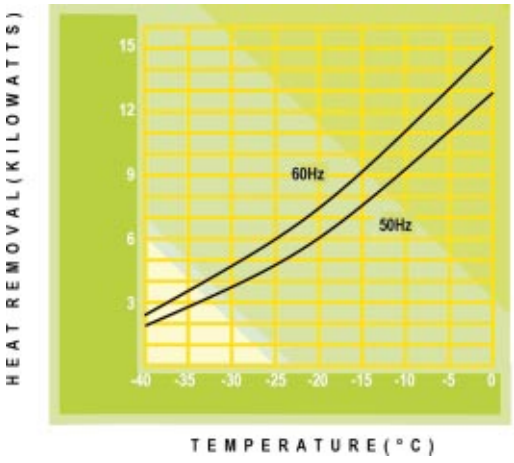

Pumping Capacity

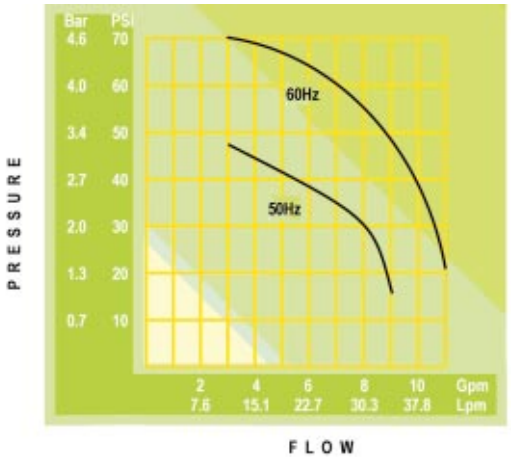

Recirculating Chillers

Custom Configurations

Many customization options are available on the HX and CFT Series Chillers. Below are just a few. If you do not see what you need, contact one of our Applications Engineers. Chances are we have the option available to suit your application.

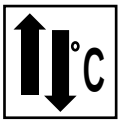

Extended Temperature Range

Feature will allow you to set a circulating temperature outside of the range of the standard model.

Stainless Steel/Plastic Unit

Recirculating Chiller features stainless steel and plastic components to provide fluid compatibility for your sensitive circulating applications.



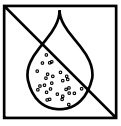

Deionization Package

We will install a purification system for standard ultra pure circulating requirements.

Custom Electrical

Recirculating Chiller can be wired for a variety of AC power sources.





Safety Interlocks

Recirculating Chiller warns of situations outside of your set specifications. Monitor flow, liquid level or low/high temperature.

Safety Certifications

Units can be customized with certified components and electrical designs to meet the safety requirements set by the following internationally recognized standards.

CSA

We have been granted the Category Certification Program for the Canadian Standards Association, complying to CSA 1010.1 for all products.

CE

All units destined for Europe are tested for compliance to the EMC and LVD directives. NESLAB's in-house EMC lab is assessed by Interference Technologies International, Ltd., as a supplier of EMC testing services.

IEC

Many of our Recirculating Chiller designs meet the rigorous European safety standards of IEC 1010 or IEC 10601, and are certified through the TUV Testing Agency.

UL

NESLAB has been granted the Client Test Data Program for the Underwriters Laboratories, and is certified to provide UL testing in-house for Commercial Processing Chiller UL 471, Medical Electrical Equipment Component UL 2601-1, and Laboratory Electrical Equipment UL 3101-1.

IBM Safety Specification

NESLAB has been designing units which conform to the IBM safety spec on recirculating chillers since 1972. This option includes NEMA 12 enclosure and emergency off.

Semi S2-93

Our semiconductor chillers are designed and tested to comply with Semi S2-93 safety guidelines for semiconductor manufacturing equipment. These guidelines apply to equipment used in the manufacturing, metrology, assembly, and testing of semiconductor products.

Recirculating Chillers *Accessories*

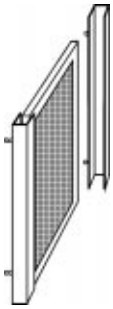

Air Filter Package

Snap on air filter protects chillers with air cooled condensers from damage and prevents loss of performance in dusty or unclean environments.

For Models

All CFT Series chillers and HX-75 through HX-750 Series chillers with air cooled condensers



Tubing Package

Tygon and silicon tubing available for air or water lines, fluids handling, and drainage procedures. Tygon tubing is a durable choice for applications requiring near ambient temperature ranges. Silicon tubing is available for dependable circulation at very low temperature ranges.

For Models

All CFT and HX Series chillers System Series water to water heat exchangers
All Bath/Circulators



Algicide

Chloramin-T Algicide eliminates the growth of algae in water baths, circulators, chillers, and other laboratory apparatus. The 250 gram bottle contains enough algicide to treat 1000 liters of water.

For Models

All CFT and HX Series chillers System Series water to water heat exchangers
All Bath/Circulators

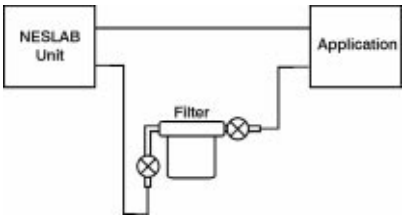

Particulate Filter Package

Can be used on the process side or on the facility side in our water cooled condenser models to protect your equipment and chiller from harmful particulates. Available in 5, 10, 25, or 40 micron sizes, partial or full flow

For Models

All CFT and HX Series chillers System Series water to water heat exchangers

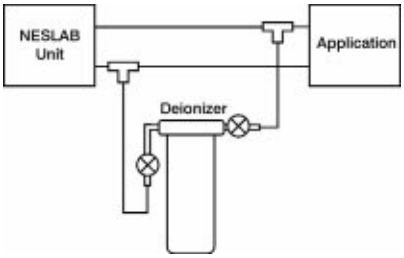

Deionized Water Package

Partial flow system maintains resistivity levels between 1 and 3 meg-ohm/cm. Available with a cartridge change indicator light. Also compatible with NESLAB's optional resistivity readout.

For Models

All CFT and HX Series chillers System Series water to water heat exchangers

HX Series II Recirculating Chiller
Installation, Operation, and Maintenance Manual

Table of Contents

PREFACE

Compliance 5
Unpacking 5
Warranty 5
After-sale Support 5

SECTION I
Safety

Warnings 6

SECTION II
General Information

Description 7
Specifications 8
Cooling Capacity 9
Pump Capacity 10

SECTION III
Installation

Site (Air-cooled Units) 12
Site (Water-cooled Units) 14
Electrical Requirements 16
Plumbing Requirements 17
Fluids 19
Water Quality Recommendations 20
Filling Requirements 21

SECTION IV
Temperature Controller

Temperature Controller 22
Refrigeration Control 22
Series II 23

SECTION V
Operation

Flow Control 28
Start Up 28
Pressure Gauge 28
Pressure Relief Valve 29
High Pressure Cutout 29

SECTION VI
Special Features

Automatic Refill Device (Optional) 30
Heater Package (Optional) 31
External Pressure Regulator (Optional) 33
Pump Motor Overload Protector 34
Remote Condenser (Optional) 35
Nitrogen Purge (Optional) 35
Particulate Filters (Optional) 35

SECTION VII
Maintenance

Service Contracts 36
Condenser Cleaning 36
Algae 36

SECTION VIII
Service

Configuration 37
Reservoir Cleaning 38
Pump and Flow Switch Strainers 39
Pump Lubrication 41
Phase Rotation 41
Suction Discharge Pressure and Speed Check 42

SECTION IX
Troubleshooting

Checklist 43
Service Assistance 43

SECTION X
Diagrams

Refrigeration Flow (HX-75 through HX-150) 44
Refrigeration Flow (HX-200 through HX-750) 44
Pump Flow (CP Pumps) 45
Pump Flow (PD and TU Pumps) 45
Dimensoins 46

APPENDIX A

Additional Electrical Information

APPENDIX B

DelTatemp Programming Software

SECTION XI

Warranty

Installation
Position the unit so the intake and discharge are not impeded. Inadequate ventilation will cause a reduction in cooling capacity and, in extreme cases, compressor failure.

Avoid excessively dusty areas and institute a periodic cleaning schedule. For proper operation, the unit needs to pull substantial amounts of air through a condenser. A build up of dust or debris on the fins of the condenser will lead to a loss of cooling capacity.

The unit will retain its full rated capacity in ambient temperatures up to approximately +24°C.

Ensure the voltage of the power source meets the specified voltage, ±10%.

The plumbing connections are located on the rear of the unit and are labelled SUPPLY and RETURN. These connections are ¾ inch FPT. Remove the plastic protective plugs from both plumbing connections. Connect the SUPPLY fitting to the inlet of your application. Connect the RETURN fitting to the outlet of your application.

To fill the reservoir open the access panel on the left rear corner of the case top and remove the reservoir cover by unscrewing the thumbscrews. Fill the reservoir to within one inch of the top. If the fluid capacity of your application and recirculation lines are significant, have extra fluid on hand.

Tap water is the recommended fluid for operation from +8°C to +80°C. Below +8°C, a non-freezing fluid must be used. A mixture of tap water and laboratory grade ethylene glycol is suggested.

Operation
Before starting the unit, double check all electrical and plumbing connections. Make sure the circulating system has been filled with cooling fluid.

On models HX-200 through HX-750, the unit must be connected to the power source for at least 12 hours to allow the oil to be heated and separated from the refrigerant

To start the unit, place the Power Switch to the ON position. The Cool and Idle LEDs on the front panel indicate the status of the refrigeration system. Cool is on when the unit is removing heat from the cooling fluid, Heat is on when the unit is in the hot gas by-pass mode. As the operating temperature approaches the setpoint, the LEDs cycle.

When the unit is shut off, wait five minutes before restarting to allow time for the refrigeration pressures to equalize. If the pressures are not allowed to equalize, the compressor will short-cycle and no cooling will occur.

Temperature Adjustment
To display the temperature setpoint, press and hold the Setpoint switch. To adjust the temperature setpoint, press and hold the Setpoint switch and turn the adjust knob until the desired temperature setpoint is indicated on the digital display. Once the setpoint is adjusted, release the Setpoint switch. The display will now indicate the temperature of the fluid in the reservoir.

Flow Control
The RECIRCULATING FLOW CONTROL handle controls the flow rate to your application. In the “+” position you receive full flow, the “-” position is no flow.

Periodic Maintenance
Periodically inspect the reservoir fluid. If cleaning is necessary, flush the reservoir with a cleaning fluid compatible with the circulating system and the cooling fluid.

The cooling fluid should be replaced periodically. When operating at low temperatures, the concentration of water in the cooling fluid will increase over time, leading to a loss of cooling capacity.

Periodic vacuuming of the condenser fins is necessary. The frequency of cleaning depends on the operating environment. We recommend a visual inspection of the condenser be made monthly after initial installation. After several months, the cleaning frequency will be established.

Units with PD and TU pumps have a strainer. If debris is in the system, the strainer will prevent the material from being drawn into the pump and damaging the pump vanes.

After initial installation, the strainer may become clogged. The strainer must be cleaned after the first week of installation. After this first cleaning, a monthly visual inspection is recommended. After several months, the frequency of cleaning will be established.

Before cleaning the strainer, disconnect the power cord from the power source and drain the reservoir.

Installation
Position the unit in a clean environment with easy access to facility cooling water and a drain. The facility water requirements must meet those specified in the instruction or unit performance will be derated.

Ensure the voltage of the power source meets the specified voltage, ±10%.

The plumbing connections are located on the rear of the unit and are labelled TAP WATER, DRAIN, SUPPLY and RETURN. Remove the plastic protective plugs from all the plumbing connections. Connect the TAP WATER fitting to the facility cooling water and the DRAIN fitting to a drain. Connect the SUPPLY fitting to the inlet of your application and the RETURN fitting to the outlet of your application.

To fill the reservoir open the access panel on the left rear corner of the case top and remove the reservoir cover by unscrewing the thumbscrews. Fill the reservoir to within one inch of the top. If the fluid capacity of your application and recirculation lines are significant, have extra fluid on hand.

Tap water is the recommended fluid for operation from +8°C to +80°C. Below +8°C, a non-freezing fluid must be used. A mixture of tap water and laboratory grade ethylene glycol is suggested.

Operation
Before starting the unit, double check all electrical and plumbing connections. Make sure the circulating system has been filled with cooling fluid.

Ensure the facility water is turned on.

On models HX-200 through HX-750, the unit must be connected to the power source for at least 12 hours to allow the oil to be heated and separated from the refrigerant

To start the unit, place the Power Switch to the ON position. The Cool and Idle LEDs on the front panel indicate the status of the refrigeration system. Cool is on when the unit is removing heat from the cooling fluid, Heat is on when the unit is in the hot gas by-pass mode. As the operating temperature approaches the setpoint, the LEDs cycle.

When the unit is shut off, wait five minutes before restarting to allow time for the refrigeration pressures to equalize. If the pressures are not allowed to equalize, the compressor will short-cycle and no cooling will occur.

Temperature Adjustment
To display the temperature setpoint, press and hold the Setpoint switch. To adjust the temperature setpoint, press and hold the Setpoint switch and turn the adjust knob until the desired temperature setpoint is indicated on the digital display. Once the setpoint is adjusted, release the Setpoint switch. The display will now indicate the temperature of the fluid in the reservoir.

Flow Control
The RECIRCULATING FLOW CONTROL handle controls the flow rate to your application. In the “+” position you receive full flow, the “-” position is no flow.

Periodic Maintenance
Periodically inspect the reservoir fluid. If cleaning is necessary, flush the reservoir with a cleaning fluid compatible with the circulating system and the cooling fluid.

The cooling fluid should be replaced periodically. When operating at low temperatures, the concentration of water in the cooling fluid will increase over time, leading to a loss of cooling capacity.

Periodic vacuuming of the condenser fins is necessary. The frequency of cleaning depends on the operating environment. We recommend a visual inspection of the condenser be made monthly after initial installation. After several months, the cleaning frequency will be established.

Units with PD and TU pumps have a strainer. If debris is in the system, the strainer will prevent the material from being drawn into the pump and damaging the pump vanes.

After initial installation, the strainer may become clogged. The strainer must be cleaned after the first week of installation. After this first cleaning, a monthly visual inspection is recommended. After several months, the frequency of cleaning will be established.

Before cleaning the strainer, disconnect the power cord from the power source and drain the reservoir.

Preface

Compliance

Products tested and found to be in compliance with the requirements defined in the EMC standards defined by 89/336/EEC as well as Low Voltage Directive (LVD) 73/23/EEC can be identified by the CE label on the rear of the unit. The testing has demonstrated compliance with the following directives:

LVD, 73/23/EEC	Complies with UL 3101-1:93
EMC, 89/336/EEC	EN 55011, Class A Verification EN 50082-1:1992 IEC 1000-4-2:1995 IEC 1000-4-3:1994 IEC 1000-4-4:1995

For any additional information refer to the Letter of Compliance that shipped with the unit (Declaration of Conformity).

Unpacking

Retain all cartons and packing material until the unit is operated and found to be in good condition.

On units with a remote control box, the box is packed in a separate carton. Be sure to locate this separate carton; do not dispose of it by mistake.

If the unit shows external or internal damage, or does not operate properly, contact the transportation company and file a damage claim. Under ICC regulations, this is your responsibility.

Warranty

The unit has a warranty against defective parts and workmanship for one full year from date of shipment. Refer to the last page of this manual for complete warranty details.

After-sale Support

NESLAB is committed to customer service both during and after the sale. If you have questions concerning the operation of your unit or the information in this manual, contact our Sales Department. If your unit fails to operate properly or if you have questions concerning spare parts or Service Contracts, contact our Service Department.

Before calling, please refer to the serial number label on the rear of the case top to obtain the following information (see Section II, Description for the serial number label location):

*- BOM number*_____

- Serial number _____

Section I Safety

Warnings

Make sure you read and understand all instructions and safety precautions listed in this manual before installing or operating your unit. If you have any questions concerning the operation of your unit or the information in this manual, contact our Sales Department for assistance (see Preface, After-sale Support).

Performance of installation, operation, or maintenance procedures other than those described in this manual may result in a hazardous situation and may void the manufacturer's warranty.

Transport the unit with care. Sudden jolts or drops can damage the refrigeration lines.

Do not attempt to defeat any of the interlock switches or safety features built into the unit.

Observe all warning labels.

Never remove warning label.

Never operate damaged or leaking equipment.

Never operate the unit without cooling fluid in the fluid reservoir.

Make sure the unit is off before connecting or disconnecting the power cord or other cables.

Always turn off the unit and disconnect the power cord from the power source before performing any service or maintenance procedures, or before moving the unit.

Always empty the fluid reservoir before moving the unit.

Never operate equipment with damaged power cords.

Refer service and repairs to a qualified NESLAB technician.

In addition to the safety warnings listed above, warnings are posted throughout the manual. These warnings are designated by an exclamation mark inside an equilateral triangle with text highlighted in bold. Read and follow these important instructions. Failure to observe these instructions can result in permanent damage to the unit, significant property damage, or personal injury or death.

Section II General Information

Description

The HX Series II Recirculating Chiller is designed to provide a continuous flow of cooling fluid at a constant temperature and volume.

The unit consists of an air-cooled or water-cooled refrigeration system, a fluid reservoir, a fluid recirculation pump, and a temperature controller.

HX units are available with a large number of options. This manual explains how to install, operate, and maintain a “standard” HX unit. This manual also explains some of the available options. Supplemental manuals are supplied with units equipped with options not covered in this manual.

Throughout the manual, you will be asked to consult the unit’s serial number label, or the pump identification label, or both, for specific information. Both labels are located on the rear of the case top.

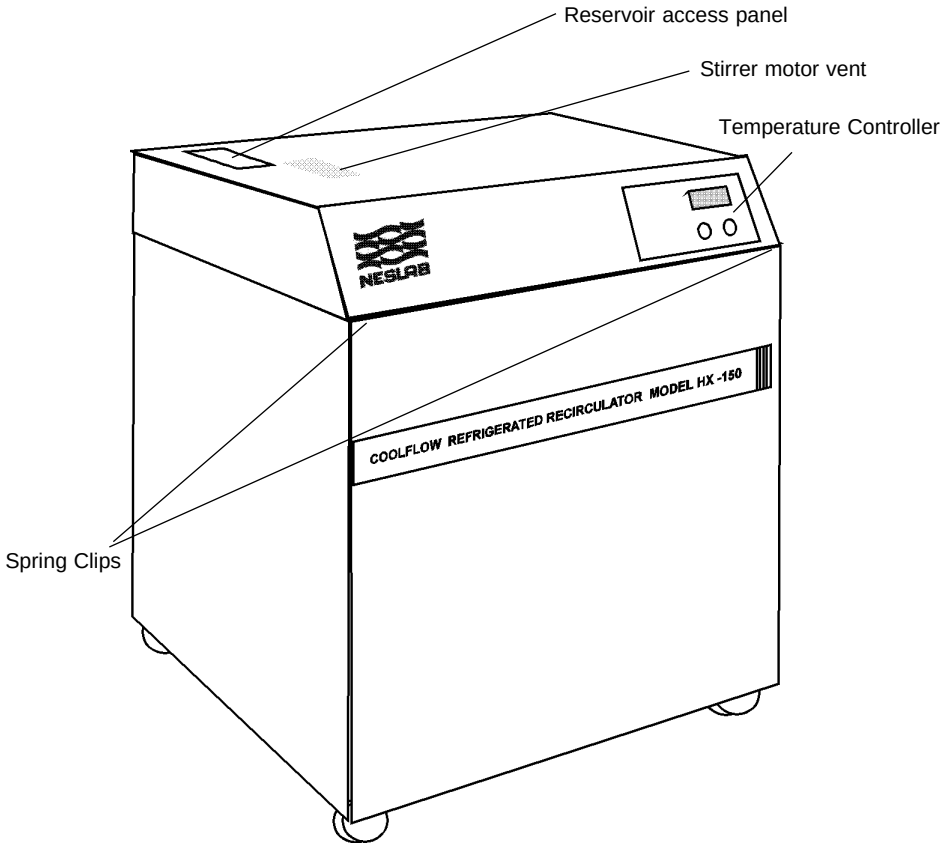

Specifications

	HX-75	HX-100	HX-150
Temperature Range	+5°C to +35°C		
Temperature Stability	±0.1°C		
Unit Dimensions (H x W x D)			
Inches	35 ¾ x 23 ¼ x 18 ¾	39 5/8 x 26 ¼ x 21 1/8	
Centimeters	90.8 x 59.0 x 47.6	100.6 x 66.6 x 53.6	
Reservoir Volume			
Gallons	5.0	8.0	
Liters	19.0	30.3	
Shipping Weight			
Pounds	261	300	320
Kilograms	118	136	145

	HX-200	HX-300	HX-500	HX-750
Temperature Range	+5°C to +35°C			
Temperature Stability	±0.1°C			
Unit Dimensions[1] (H x W x D)				
Inches	45 7/8 x 33 ¾ x 25 ¼		50 5/8 x 46 x 28 ¾	63 ¾ x 46 x 29
Centimeters	116.5 x 85.7 x 64.1		128.3 x 116.8 x 73.0	162.0 x 116.8 x 73.6
Reservoir Volume				
Gallons	15.0		28.0	40.0
Liters	56.8		106.0	151.0
Shipping Weight				
Pounds	471	531	746	971
Kilograms	214	241	338	440

1. The model HX-750 with a water-cooled refrigeration system has the same dimensions as the HX-500. For additional dimensions see page 46.

Cooling Capacity

Cooling capacity will vary depending on fluid temperature, ambient temperature, and cooling fluid.

Cooling capacities for models HX-75 through HX-750 were obtained under the following conditions:

1. *air-cooled unit operating at +20°C (+68°F) ambient temperature.*
2. *cooling fluid with specific heat of 1.0 was used for fluid temperatures from +5°C to +35°C.*

HX-75, 100, & 150

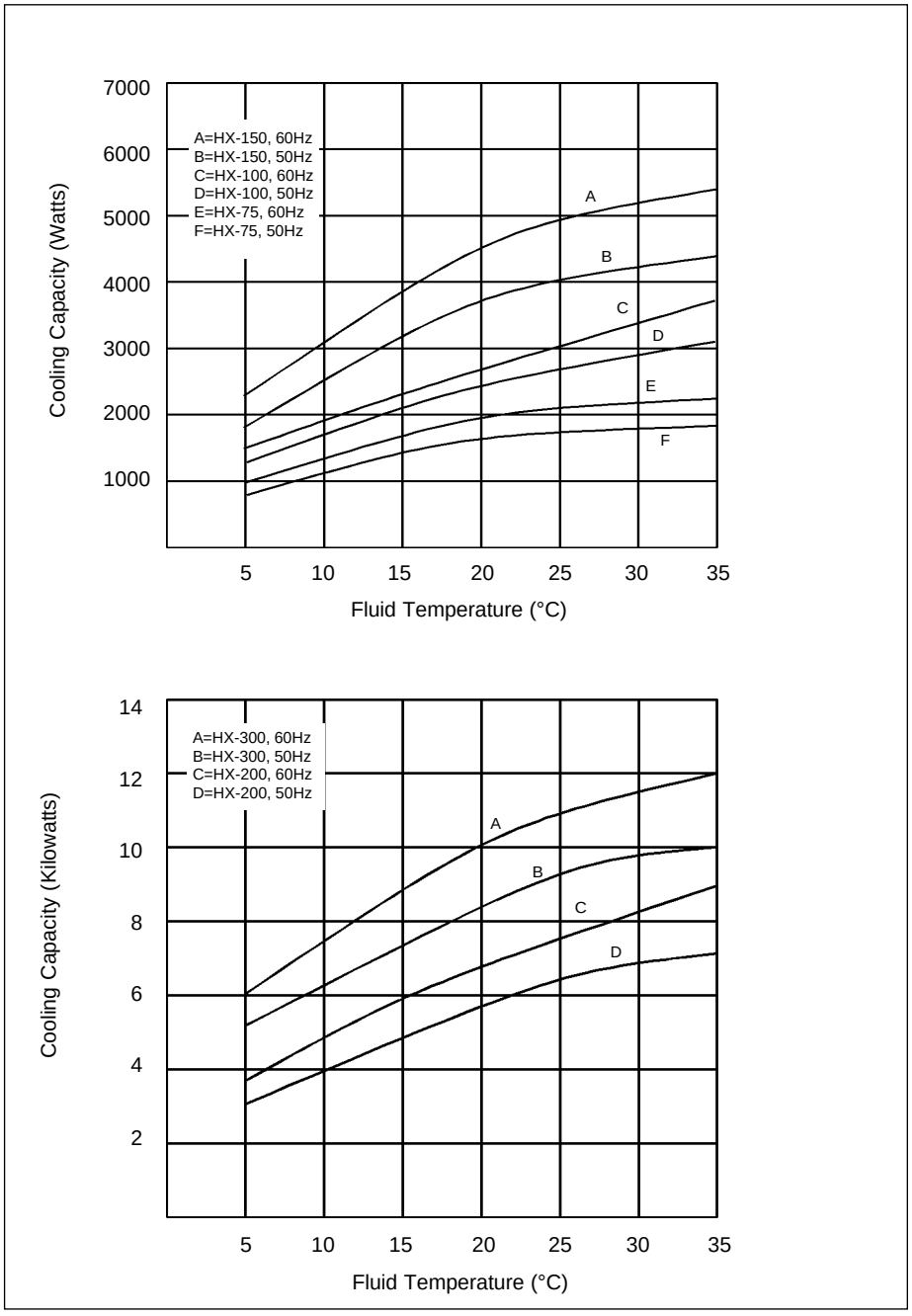

HX-200 & 300

HX-500 & 750

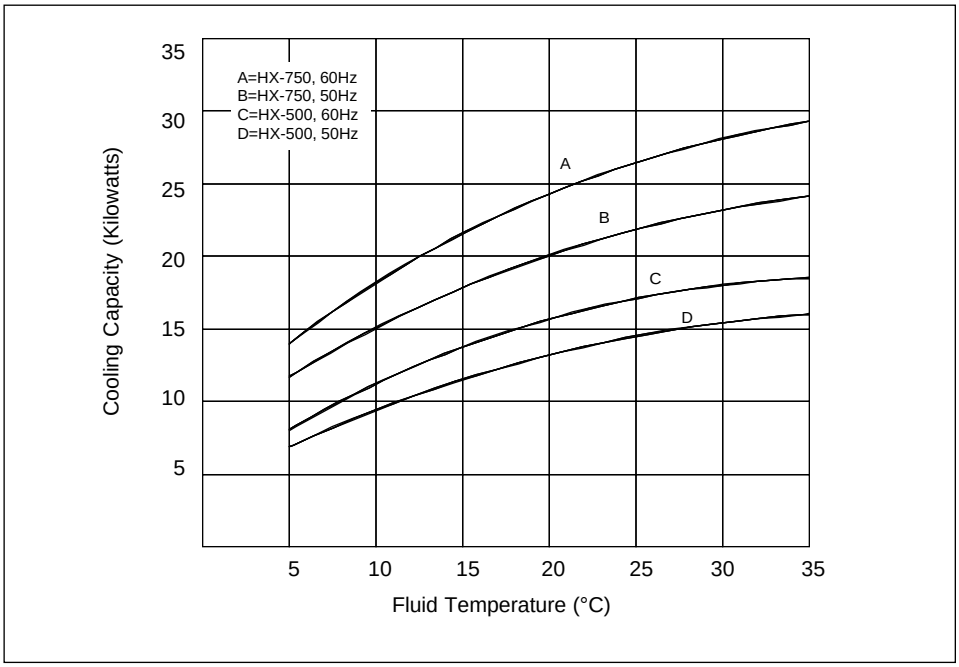

Pump Capacity

HX units are available with one of three standard pump types: positive displacement (PD), centrifugal (CP), and turbine (TU). Refer to the pump identification label on the rear of the case top or rear of analog temperature controller to identify the specific pump in your unit.

PD1, PD2 & TU1

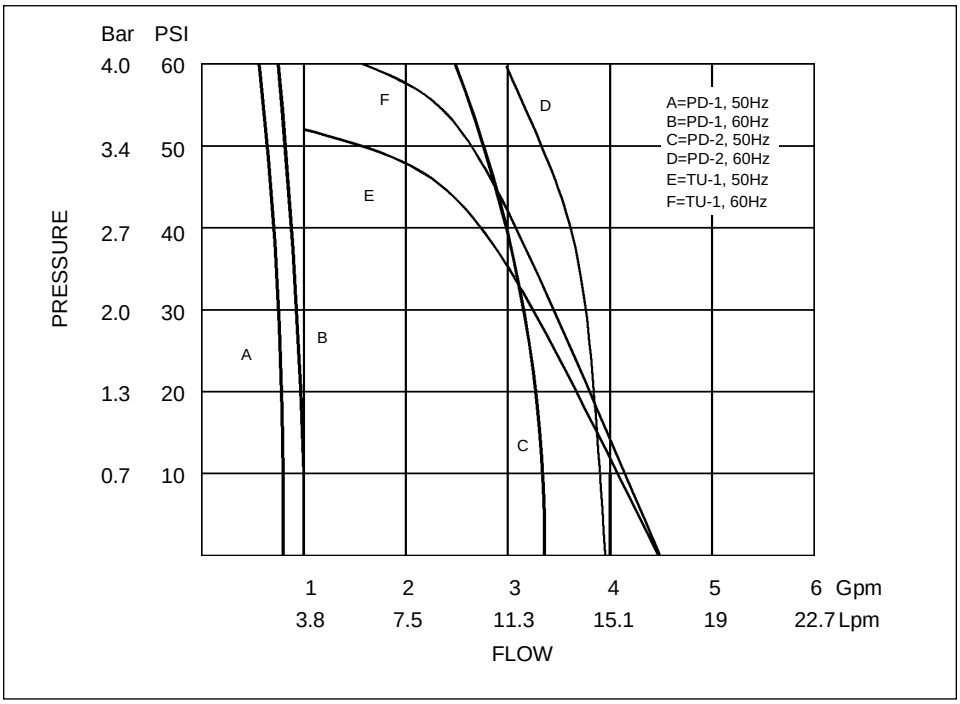

CP

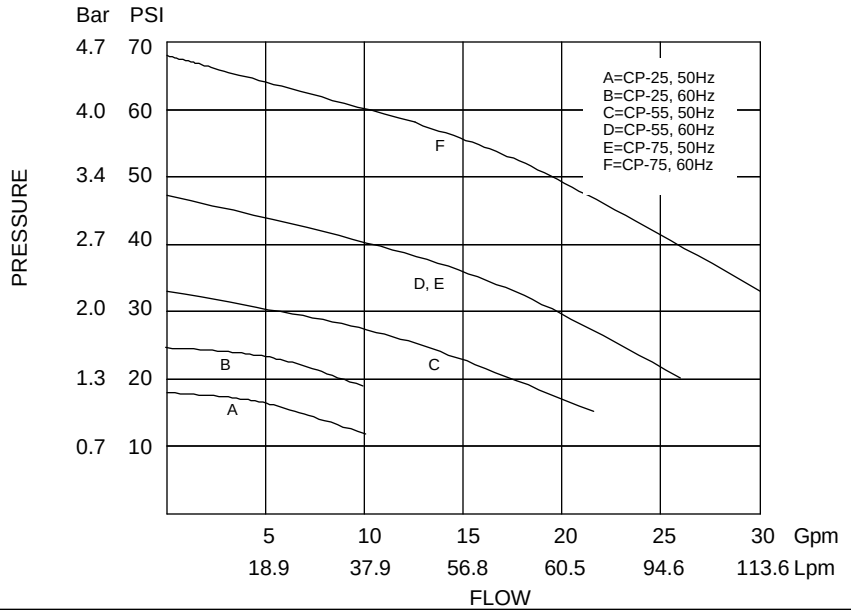

TU-3, 5 & 6

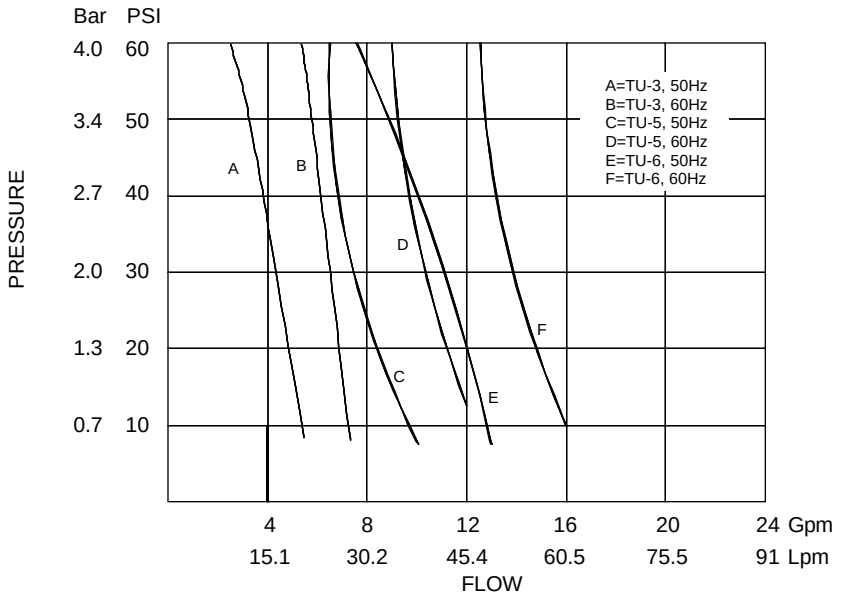

TU-7, 8 & 9

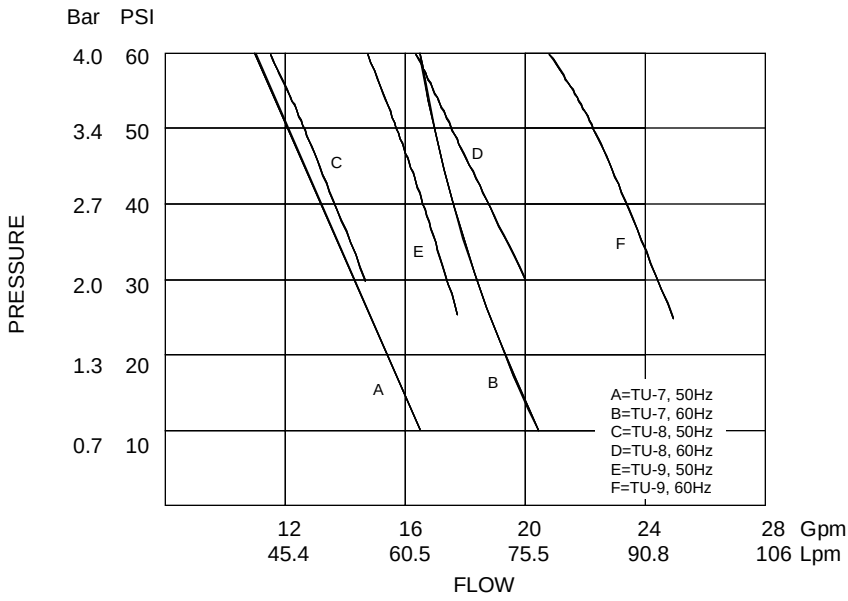

Section III Installation

Site (Air-cooled Units)

The unit should be located in a laboratory or clean industrial environment where ambient temperatures are inside the range of +55°F to +95°F (+13°C to +35°C).

The unit will retain its full rated capacity in ambient temperatures to approximately +75°F (+24°C). Above +75°F, derate the cooling capacity 1% for every 1°F above +75°F, to a maximum ambient temperature of +95°F. In degrees Celsius, derate the cooling capacity 1% for every 0.5°C above +24°C, to a maximum ambient temperature of +35°C.



Never place the unit in a location where excessive heat, moisture, or corrosive materials are present.

The unit has an air-cooled refrigeration system. It must be positioned so the air intake and discharge are not impeded.

On models HX-75 through HX-150, air is drawn through the left side of the unit and discharged through the right and rear. A minimum clearance of 2 feet (0.6 meter) on these three sides is necessary for adequate ventilation.

On models HX-200 through HX-750, air is drawn through the front of the unit and discharged through the side and rear panels. A minimum of 5 feet (1.5 meters) on all four sides of the unit is necessary for ventilation.

In some applications where space is at a premium, the minimum ventilation clearance can be compromised. However, consult our Sales Department before positioning the unit in a location with less minimum clearance than listed above. Inadequate ventilation will cause a reduction in cooling capacity and, in extreme cases, compressor failure.

Excessively dusty areas should be avoided and a periodic cleaning schedule should be instituted (see Section VII, Condenser Cleaning).

On models HX-100 through HX-750 the stirrer motor is located under the case top. (Models HX-500 and HX-750 have two stirrer motors.) Heat generated by the stirrer motor is discharged through vents in the case top. Do not block the vents. A minimum clearance of 2 inches (5 centimeters) is necessary for adequate ventilation. See illustration on page 7.

NOTE: Units with plate heat exchangers do not have stirrer motors.

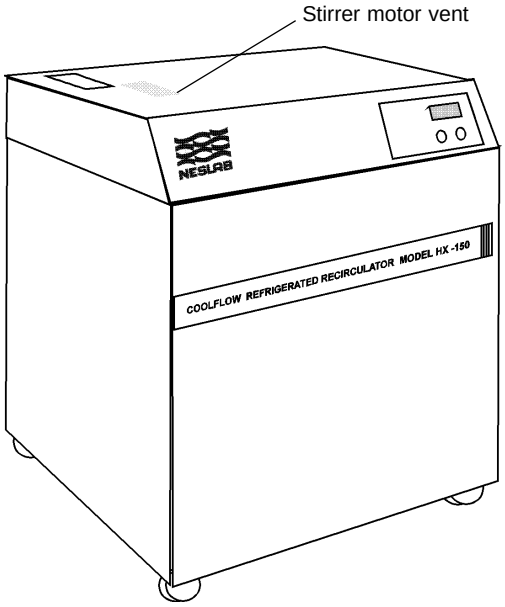

NOTE: The HX-750 380/480V model contains a three phase condenser fan motor. It is possible to misconnect the main power and have the motor turn in the wrong direction resulting in incorrect airflow over the condenser. Proper airflow is achieved by exchanging any two main power connectors.

Refer to the table below to determine the approximate amount of air intake required for the unit to retain its full rated capacity. If the air intake does not meet these standards, cooling capacity will be derated.

	HX-75	HX-100	HX-150	HX-200
Air Intake				
Cubic feet per minute	600	710	1050	2000
Liters per minute	17000	20100	29730	56640

	HX-300	HX-500	HX-750
Air Intake			
Cubic feet per minute	1900	5000	5600
Liters per minute	53800	141750	158800

Site (Water-cooled units)

The unit should be located in a laboratory or clean industrial environment with easy access to a facility cooling water supply and a drain.

All units are equipped with castors for easy movement. This allows the unit to be placed in a small area, as long as there is ample space for the unit to be moved for access on all four sides. A minimum access clearance of 3 feet (1 meter) on two adjacent sides is recommended.

The facility cooling water supply must meet or exceed the requirements listed in the table shown on the next page for the unit to operate at its full rated capacity. If the facility cooling water does not meet these standards, the cooling capacity will be derated.

As the temperature of the cooling water supply increases, the required flow rate and pressure of the cooling water supply increases.

For example, with a model HX-150, if the temperature of the cooling water supply is +65°F, the flow rate must be at least 1.5 gallons per minute, with a pressure differential of at least 3.5 PSI. However, if the temperature of the cooling water supply is +85°F, the flow rate must be at least 4.0 gallons per minute, with a pressure differential of at least 10 PSI.

If the unit is being used with a building water supply, the back pressure of the drain must be less than the supply pressure.

A water regulating valve, located in the TAP WATER line, regulates the flow rate of the cooling water supply as it enters the unit. The valve regulates the flow rate based on the heat load. Flow through the unit stops automatically when the unit is shut off.

On models HX-100 through HX-750 the stirrer motor is located under the case top. (Models HX-500 and HX-750 have two stirrer motors.) Heat generated by the stirrer motor is discharged through vents in the case top. Do not block the vents. A minimum clearance of 2 inches (5 centimeters) is necessary for adequate ventilation. See illustration on page 7.

NOTE: Units with plate heat exchangers do not have stirrer motors.

	Temperature of cooling water supply			
	+55°F (+13°C)	**+65°F (+18°C)**	**+75°F (+24°C)**	**+85°F (+29°C)**
HX-75				
Flow Rate				
Gallons per minute	0.75*	1.0	1.5	3.0
Liters per minute	2.8*	3.7	5.7	11.4
Pressure Drop				
PSI	1.5*	2.0	3.5	8.0
Bar	0.10*	0.13	0.24	0.55
HX-100				
Flow Rate				
Gallons per minute	1.0*	1.5	2.0	3.5
Liters per minute	3.8*	5.7	7.6	13.2
Pressure Drop				
PSI	2.0*	3.5	5.0	10.0
Bar	0.13*	0.24	0.34	0.69
HX-150				
Flow Rate				
Gallons per minute	1.0*	1.5	2.5	4.0
Liters per minute	3.8*	5.7	9.5	15.1
Pressure Drop				
PSI	2.0*	3.5	6.0	10.0
Bar	0.13*	0.24	0.41	0.69
HX-200				
Flow Rate				
Gallons per minute	1.8*	2.5	3.5	6.0
Liters per minute	6.8*	9.5	13.2	22.7
Pressure Drop				
PSI	5.0*	6.0	7.0	18.0
Bar	0.34*	0.41	0.48	1.24
HX-300				
Flow Rate				
Gallons per minute	2.5*	4.0	6.5	11.0
Liters per minute	9.5*	15.1	24.6	41.6
Pressure Drop				
PSI	6.0*	8.0	13.5	25.0
Bar	0.41*	0.55	0.93	1.72
HX-500				
Flow Rate				
Gallons per minute	3.5	5.0	8.0	16.0
Liters per minute	13.2	18.9	30.3	60.6
Pressure Drop				
PSI	13.0	17.0	23.0	57.0
Bar	0.89	1.17	1.58	3.93
HX-750				
Flow Rate				
Gallons per minute	6.0	8.0	12.5	16.6
Liters per minute	22.7	30.3	47.3	62.8
Pressure Drop				
PSI	14.0	20.0	28.5	40.0
Bar	0.96	1.38	1.96	2.76

*Estimater Value

Electrical Requirements

Refer to the table below to determine the unit's electrical requirements. Verify the requirements by reviewing the ratings listed on the serial number label on the rear of the case top or rear of analog temperature controller.

	HX-75	HX-100	HX-150
Volts	208/230 220/240		
Hertz	60 50		
Phase	1 1		
Plug	NEMA L6-30P or L6-20P		

	HX-200	HX-300	HX-500	HX-750
Volts	208/230 200/220	380/420	208/230	380/420
Hertz	60 50	50	60	50
Phase	3 3	3	3	3
Plug	NEMA L15-30P or L16-20P		N/A	

Make sure the voltage of the power source agrees with the unit's voltage and frequency rating. The unit is designed to tolerate deviations of ±10% from the rated line voltage.

Models HX-75 through HX-300 have an 8 foot (2.4 meter) power cord installed on the unit at the time of shipment.

NOTE: Custom units equipped with heaters may not have a power cord. See Section VI, Special Features.

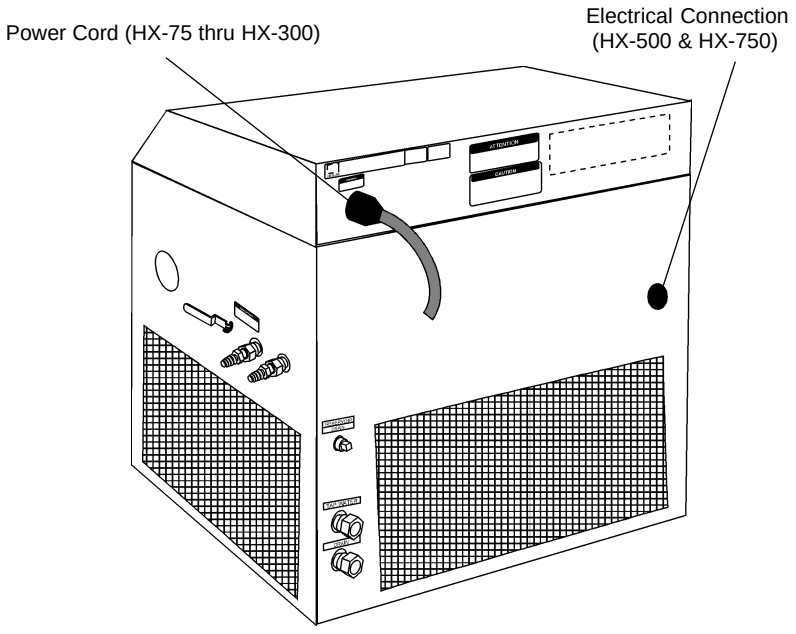



The unit construction provides extra protection against the risk of electric shock by grounding appropriate metal parts. The extra protection may not function unless the power cord is connected to a properly grounded outlet. It is the user's responsibility to assure a proper ground connection is provided.

Models HX-500 and HX-750 are not equipped with a power cable. Installation of the cable is the user's responsibility. Wire the unit in conformance to local, state, and federal electrical codes. Double check all wiring to make sure it is properly connected and protected from the elements.

Models HX-200 through HX-750 are equipped with a compressor crankcase heater. The crankcase heater warms the oil in the compressor and prevents refrigerant from mixing with the oil. Before start up, the unit must be connected to its power source for at least 12 hours. This allows time for the oil to be heated and separate from the refrigerant.

Plumbing Requirements

Air-cooled and water-cooled units

Before installing the unit to an instrument that previously used tap water as a cooling fluid, flush the instrument several times to remove any rust or scale that has built up. Consult the manufacturer of the instrument for a cleaning fluid recommendation.

The plumbing fittings used to connect the HX to the instrument being cooled are located on the right side of the unit (labelled SUPPLY and RETURN). These connections are ¾ inch FPT.

Remove the protective plugs from the SUPPLY and RETURN connections. Connect the SUPPLY fitting to the inlet of the instrument being cooled. Connect the RETURN fitting to the outlet of the instrument being cooled.

The RESERVOIR DRAIN connection, located on the rear of the unit, is a ½ inch FPT fitting connected internally to the unit's fluid reservoir. This fitting is for draining the reservoir. The unit is shipped with a ½ inch MPT plug installed in this fitting. Remove the plug to drain the reservoir.

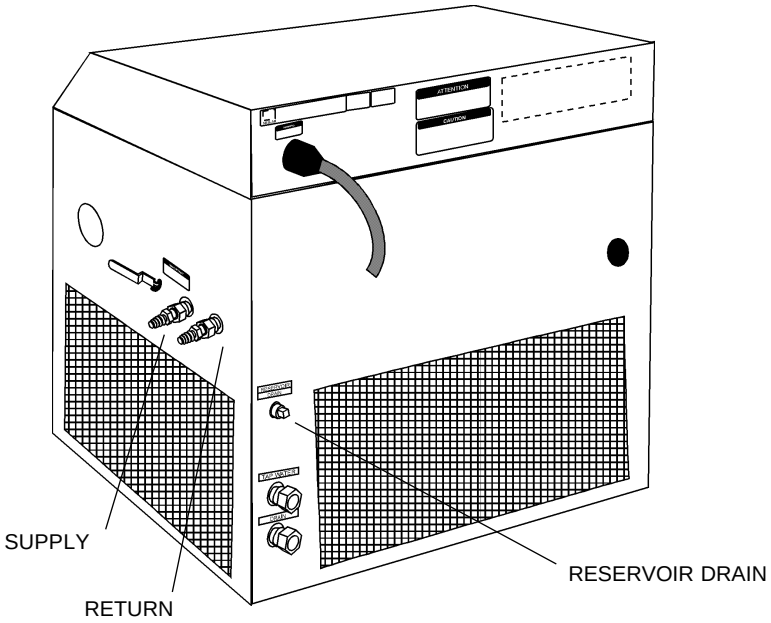

Two plumbing adapters (¾ inch MPT x 5/8 inch hose) are included with the unit. If the unit is being plumbed to the instrument being cooled using flexible tubing, install the adapters in the SUPPLY and RETURN plumbing ports. To prevent leaking, wrap the threads of the adapters with Teflon® sealing tape before installing them in the plumbing ports. The adapters will accept ½ or 5/8 inch ID flexible tubing.

If the unit is "hard plumbed" to the instrument being cooled or to the cooling water supply, damage can occur if the unit is bumped or jolted from its site. Provisions should be made to prevent the unit from being moved after installation. Once the unit is plumbed, secure the locking castors on the unit's base. If the unit is located in a heavy traffic area where the possibility of collision is imminent, it may be necessary to secure the unit to the site using blocks or mounting brackets.

Flexible tubing, if used, should be heavy wall or reinforced construction. All tubing should be rated to withstand 110 psi at +35°C. Make sure all tubing connections are securely clamped. Avoid running tubing near radiators, hot water pipes, etc. If substantial lengths of tubing are necessary, insulation may be required to prevent loss of cooling capacity.

Tubing and insulation are available from NESLAB. Contact our Sales Department for more information (see Preface, After-sale Support).

It is important to keep the distance between the unit and the instrument being cooled as short as possible, and to use the largest diameter tubing practical. Tubing should be straight and without bends. If diameter

reductions must be made, they should be made at the inlet and outlet of the instrument being cooled, not at the HX.

If substantial lengths of connecting tubing are required, they should be pre-filled with cooling fluid before connecting them to the unit.

Water-cooled units
The plumbing connections used to connect the water-cooled condenser in the HX to the facility cooling water supply are located at the rear of the unit (labelled TAP WATER and DRAIN). On models HX-75 through HX-300, these fittings are ½ inch FPT. On models HX-500 and HX-750, these fittings are 1 inch FPT.

Remove the plastic protective plugs from the TAP WATER and DRAIN connections. Connect the TAP WATER fitting to the facility cooling water supply. Connect the DRAIN fitting to a drain.

Fluids

The selected cooling fluid must have a viscosity of 50 centistokes or less at the lowest operating temperature.



If your unit is equipped with a plate heat exchanger, do not use 100% water as a recirculating fluid. Due to the physical nature of a plate heat exchanger, and its response to temperature changes, using 100% water may cause the plate heat exchanger to rupture.



Never use flammable or corrosive fluids with this unit. Distilled and deionized water may be aggressive and cause material corrosion. Please contact NESLAB before subjecting this unit to prolonged exposure to distilled or deionized water.

Tap water is the recommended fluid for operation from +8°C to +35°C.

Below +8°C, a non-freezing solution is required. A 50/50 mixture, by volume, of water and laboratory grade ethylene glycol is suggested.



Do not use automobile anti-freeze. Commercial anti-freeze contains silicates that can damage the pump seals. Use of automobile anti-freeze will void the manufacturer's warranty.

For units with extended temperature ranges above +35°C, tap water is the recommended fluid up to +80°C. Above +80°C, the user is responsible for the fluid(s) used.

Water Quality Recommendations

Unfavorably high total ionized solids (TIS) can accelerate the rate of galvanic corrosion. These contaminants can function as electrolytes which increase the potential for galvanic cell corrosion and lead to localized corrosion such as pitting which can be observed at the studs and on the outside surface of cooling coils. Eventually, the pitting will become so extensive that the coil will leak refrigerant into the water reservoir.

As an example, raw water in the United States averages 171 ppm (as NaCl). The recommended level for use in a water system is between 0.5 to 5.0 ppm (as NaCl).

Recommendation: Initially fill the tank with distilled/deionized water. Do not use untreated tap water as the total ionized solids level may be too high.

Maintain this water quality at a resistivity of between 1 to 10 megohm-cm (compensated at 25°C) by using a purification system. Although the initial fill may be as high as 10 megohm-cm (compensated at 25°C), the desired level for long time usage is 1 to 3 megohm-cm (compensated at 25°C).

The above two recommendations will reduce the electrolytic potential of the water and prevent or reduce the galvanic corrosion observed.

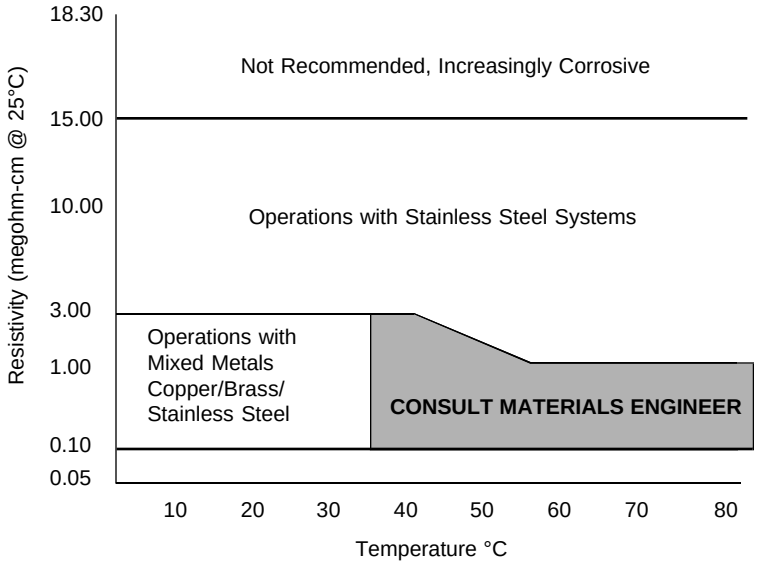

Water Quality Considerations

Filling Requirements

The reservoir access panel is located at the left rear corner of the case top. To open the access panel, slide the latch back (towards the rear of the unit) and lift.

The reservoir cover is located below the access panel. Loosen the thumbscrews and remove the reservoir cover.

Fill the fluid reservoir with cooling fluid to within 1 inch of the top.

The fluid capacity of the instrument being cooled and the recirculation lines may be significant. To prevent the lowering of the fluid level in the reservoir below the operating level, have extra cooling fluid on hand to keep the reservoir filled to within 1 inch of the top.

When the recirculating system is full, replace the reservoir cover and the access panel.

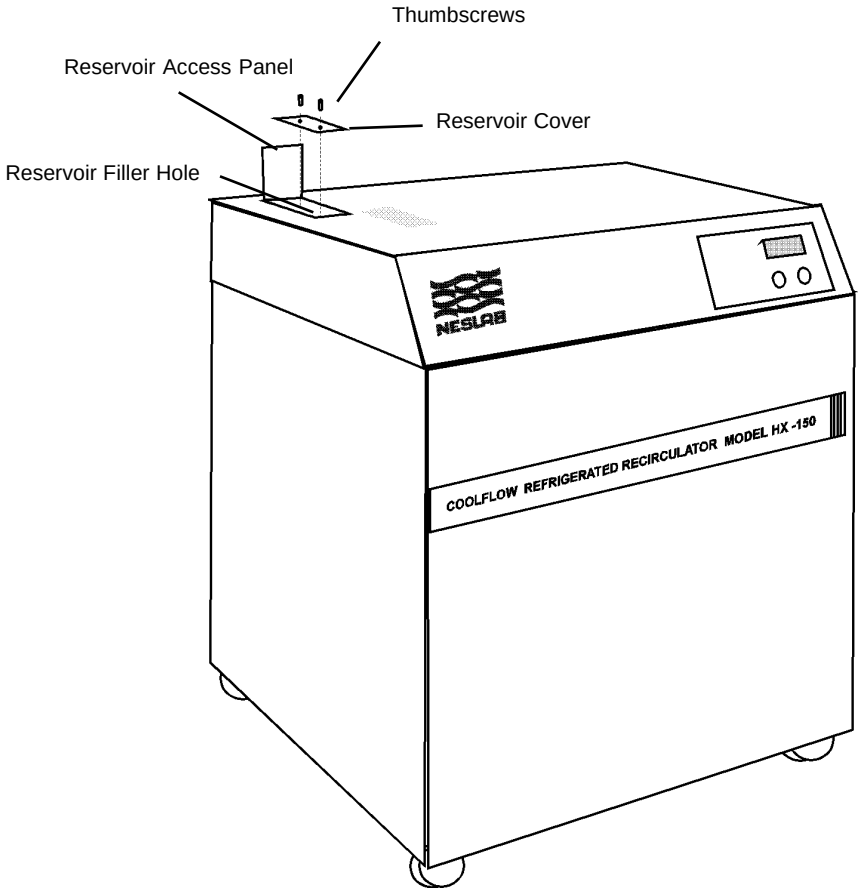

Section IV Temperature Controllers

Temperature Controllers

The temperature controller supplied with your unit is the Series II. This section explains the operation of the controller.

Refrigeration Control

On “standard” units, the refrigeration compressor runs continuously, unless the fluid temperature exceeds +40°C. However, on some “custom” units equipped with an extended temperature range, the compressor may operate at higher temperatures. A hot gas by-pass system, designed to eliminate compressor cycling and premature wear, is used to maintain constant temperature in all units.

The Cool and Idle indicators, located on the control panel, indicate the status of the refrigeration system. The Idle indicator is lit when the unit is in the hot gas by-pass mode. The Cool indicator is lit when the refrigeration system is removing heat from the cooling fluid. As the fluid temperature approaches the temperature setpoint, the indicators cycle on and off to indicate the duty cycle of the system. The unit can be in the Cool or the Idle mode, but never both at the same time. A balance between Cool and Idle is needed to control temperature.

When the unit is shut off, wait approximately 5 minutes before restarting. This allows time for the refrigeration pressures to equalize. If the pressures are not allowed to equalize, the compressor will short-cycle (clicking sound) and no cooling will occur.

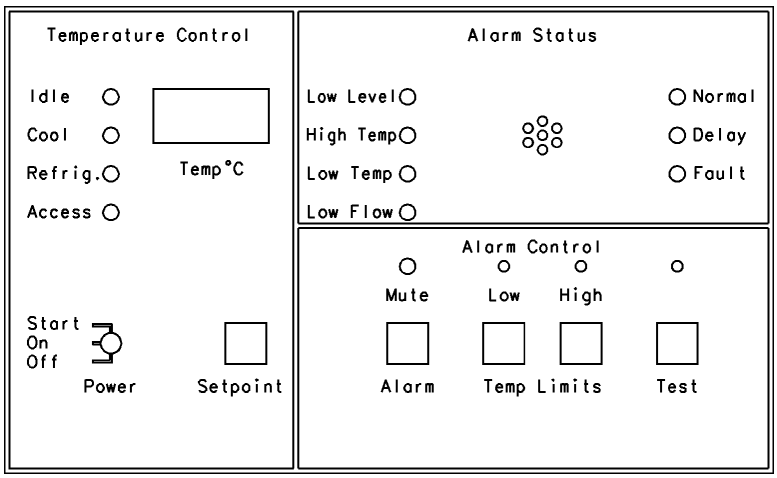

Series II Temperature Controller

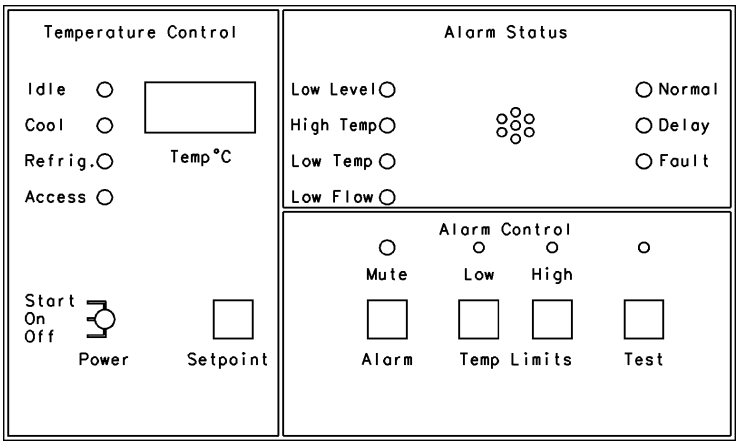

Series II Temperature Controller

Series II

Description

The Series II temperature controller features are divided into four sections. Three are mounted on the operator panel on the front of the case top: Temperature Control, Alarm Control, and Alarm Status. The fourth section, the Interface Access. panel is mounted on the rear of the case top and is covered with a removable protective metal plate.

The four controller sections all work together, but for ease of explanation, are described separately.

The Series II temperature controller is also available without the alarm circuitry installed. Controllers with this option are equipped with only two of the four Series II sections: Temperature Control and the Interface Access. panel.

Temperature Control

This section of the temperature controller turns the unit on and off, adjusts and displays the fluid and setpoint temperatures, and indicates general refrigeration status.

Before starting the unit, double check all electrical and plumbing connections and make sure the recirculating system (the HX, the instrument being cooled, and the tubing that connects them) has been properly filled with cooling fluid. Open the flow control valve to allow slightly more than 0.3 gallons per minute (1.0 liters per minute) of flow through the recirculation lines (see Section V, Flow Control).

NOTE: For water-cooled units ensure the facility water is turned on.

A three position toggle switch controls the Off/On/Start functions. To start the unit, momentarily hold the Off/On/Start switch in the Start position. Normal running position is On. To shut the unit off, place the Off/On/Start switch in the Off position.

To display the temperature setpoint, press and hold the Setpoint button. To adjust the temperature setpoint, press and hold the Setpoint button and turn the dial located directly above the Setpoint button until the desired temperature setpoint is indicated on the Temp°C LED display. Once the setpoint is adjusted, release the Setpoint button. The Temp°C LED display will indicate the fluid temperature.

Inadvertent movement of the Setpoint dial will result in a change in the setpoint. The change will not be immediately reflected on the Temp°C LED display unless the Setpoint button is pressed. The display will eventually change as the unit responds to the new setpoint.

The Temperature Control section is equipped with four indicators: Idle, Cool, Refrig. (refrigeration), and Access. (accessory). The Idle and Cool indicators are explained in Section IV, Refrigeration Control.

The Refrig. indicator displays the status of the refrigeration compressor. The indicator is lit when the compressor is running.

The Access. indicator displays the status of the ACCESS. ENABLE/DISABLE switch on the Interface Access. panel. The indicator is lit when the switch is in the ENABLE position. See Interface Access. panel for more information.

Alarm Control

The Alarm Control section adjusts the high and low temperature limits of the alarm, tests the alarm, and activates/de-activates the audible alarm.

To display the high or low temperature limit, press the corresponding button. When the button is pressed, the limit is indicated on the Temp°C display.

To adjust either temperature limit, press the corresponding button and turn the slotted potentiometer located directly above the button (a small screwdriver is required). The high and low values must be at least 4°C apart for the unit to operate.

The Test button simulates high and low temperature conditions to test the temperature limits.

To test the temperature limits, press the Test button and turn the dial located directly above the button. The simulated temperature will appear on the Temp°C display. When the temperature limits are exceeded on the display, the alarm will sound, and the corresponding indicator in the Alarm Status section will light indicating which limit has been exceeded.

The alarm will only sound when a fault occurs. The Alarm button alternately activates and mutes the audible alarm as indicated by the Mute indicator. When the alarm is muted, it will remain muted until the Alarm button is pressed; the alarm does not reset after a fault condition has been corrected.

Alarm Status

Alarm Status section indicates the status of the fault monitors. Four amber indicators display the status of the Low Level, High Temperature, Low Temperature, and Low Flow fault monitors. In the event of a fault, the cause of the fault must be identified and corrected before the unit can be restarted.

The Low Level indicator is connected to a float switch in the reservoir. If a low cooling fluid level condition is detected, the Low Level indicator will light and the Delay indicator will flash. If the condition is not corrected within 30 seconds, the Delay and Normal indicators turn off, the Fault indicator turns on, and the audible alarm will sound. After 50 seconds (total elapsed time), the unit will shut down and a set of relay contacts will open (the status of the relay contacts can be monitored using pins 14 and 15 of the REMOTE CONT. receptacle on the Interface Access. panel).

The Low Flow indicator is connected to a flow switch in the RETURN line. A low flow fault occurs when the flow rate of the returning cooling fluid drops below 0.3 gallons per minute (1.0 liters per minute). If a low flow condition is detected, the Low Flow indicator will light and the Delay indicator will flash. If the condition is not corrected within 5 seconds, the Delay and Normal indicators turn off, the Fault indicator turns on, and the audible alarm will sound. After 30 seconds (total elapsed time), the unit will shut down and the relay contacts will open.

The High/Low Temp indicators are connected to sensors that monitor the temperature of the cooling fluid as it exits the reservoir. The monitors protect the system from exposure to excessively hot or cold cooling fluid. A temperature fault occurs when the cooling fluid temperature exceeds the set temperature limit. In the event of a high or low temperature fault, the unit will shut down, the corresponding indicator will light, the audible alarm will sound, and the set of relay contacts will open.

The Normal, Delay, and Fault indicators, also mounted in the Alarm Status section, monitor the status of a fault.

Normal (green) indicates that no fault is present and the unit is operating normally.

Delay (amber) indicates an initial condition out of desired range.

The Delay indicator will flash:

1. *during the 30 second low fluid level condition delay period.*
2. *during the 5 second low flow condition delay period.*
3. *while the fluid temperature is reaching the high and low temperature conditions following a power up. Once the fluid temperature satisfies the high and low limit conditions, the temperature alarm is armed and a fault will occur if the temperature goes outside of the limits.*

The Delay indicator turns off after these conditions are met.

The Fault indicator (red) indicates a fault has occurred. During a fault, the audible alarm will sound (unless muted), and the status indicator will displaythe cndition(s) causing the fault.

Interface Access. Panel

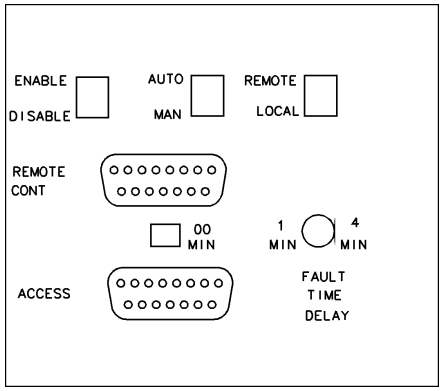

Interface Access panel (rear of case top)

The Interface Access. panel allows the Series II temperature controller to be controlled and monitored with various electronic accessories.

The ACCESS. ENABLE/DISABLE switch allows the user to select the source of temperature setpoint adjustment. When the switch is in the ENABLE position, the setpoint is derived from the ACCESS receptacle (pins 6 and 15, 10mV/°C). When the switch is in the Disable position, the setpoint is derived from the Setpoint dial in the Temperature Control section on the operator panel.

The RESTART AUTO/MAN switch controls the operation of the controller's START switch. If the switch is in the MAN position, the START switch is "open" and the unit must be manually restarted when power is restored following an outage. In the AUTO position, the START switch is "closed" and the unit will automatically restart when power is restored following an outage. See ON/OFF/START Logic for more information.

The START/STOP REMOTE/LOCAL switch selects the location where the unit is turned on: from the operator panel ON/OFF/START switch or from an external switch. See ON/OFF/START Logic for more information.

The FAULT TIME DELAY potentiometer allows adjustment of the delay period following an initial "out of limits" condition. The time adjustment is in addition to the delays described in the Alarm Status section. For example, if the cooling fluid in the reservoir drops below the operating level, there is a 30 second delay period before a fault occurs. If the FAULT TIME DELAY is adjusted to 1 minute, the delay period for a low level condition would be 1 minute, 30 seconds. See the Alarm Status section for more information.

The oo MIN receptacle allows the controller to be configured so the unit will continue to run if a fault occurs. This option is available for customers who are willing to accept the risk of damage to the unit in order to continue to provide all available cooling fluid to the instrument being cooled. Contact our Service Department for more information.

The power receptacle located next to the Interface Access. panel is a NEMA 5-15R receptacle rated for 125V, 0.25A maximum. It is typically used to power a deionizer LED.

Section V Operation

Flow Control

The RECIRCULATING FLOW CONTROL handle, located on the right-hand side of your unit, is connected to a valve that controls the flow rate of the cooling fluid to the instrument being cooled.

When the handle is in the “+” position, the valve is open and all possible cooling fluid is supplied to the instrument being cooled. When the handle is in the “-” position, the valve is closed and no cooling fluid is supplied to the instrument being cooled. When the handle is between these two positions, the flow rate of the cooling fluid is between full flow and no flow. Use a flow meter on the SUPPLY line to adjust the desired flow rate.

The flow control valve must be opened slightly to allow fluid to circulate through the flow switch that monitors the flow rate. A flow rate of more than 0.3 gallons per minute (1.0 liters per minute) is necessary. If the flow is completely shut off, or if the flow is not adequate, a low flow fault will occur and the unit will not start.



Never “crank” the valve wide open from the closed or slightly open position.

Start Up

For CE Mark units check the circuit breaker setting on the side of the bonnet.

Models HX-200 through HX-750 are equipped with a compressor crankcase heater. The crankcase heater warms the oil in the compressor and prevents refrigerant from mixing with the oil. Before start up, the unit must be connected to its power source for at least 12 hours. This allows time for the oil to be heated and separate from the refrigerant.



On water-cooled units, ensure the facility water is on and make sure the cooling water supply is connected to the TAP WATER connection, not the DRAIN connection.

A three position toggle switch controls the Off/On/Start functions. To start the unit, momentarily hold the Off/On/Start switch in the Start position. Normal running position is On. To shut the unit off, place the Off/On/Start switch in the Off position.

When the unit is shut off, wait approximately 5 minutes before restarting. This allows time for the refrigeration pressures to equalize. If the pressures are not allowed to equalize, the compressor will short-cycle (clicking sound) and no cooling will occur.

Pressure Gauge

The RECIRCULATING PRESSURE gauge is located next to the flow control handle. The gauge indicates the operating pressure of the system.

Pressure Relief Valve
(PD and TU Pumps Only)

Units with a PD-1, PD-2, or any TU type pump have an adjustable pressure relief valve. Refer to the pump identification label on the rear of the case top or rear of analog controller to identify the specific pump in your unit.

The pressure relief valve establishes the maximum operating pressure of the unit. If the pressure of the fluid leaving the pump exceeds the valve setting, the relief valve will bypass the fluid within the unit to relieve the pressure. The valve does not determine the actual operating pressure; the operating pressure of the system is determined by the back pressure of the connected equipment and the setting of the flow control valve. If adjustment seems necessary, consult our Service Department for assistance.

Before calling, refer to the serial number label on the rear of the case top to obtain the following:

- *BOM number*
- *Serial number*

High Pressure Cutout
(Water-Cooled Units Only)

Should the unit's refrigeration discharge pressure become too high the high pressure cutout will activate and shut down the unit. High pressures can be caused by a lack of cooling water to the compressor or debris in the refrigeration lines.

Once the cause of the problem has been identified and corrected you must manually reset the cutout. The cutout location depends on the size of your unit. On the HX-75, it is behind the right side panel, on the HX-100 and HX-150 it is behind the left side panel, and on the HX-200 through HX-750 it is behind the rear panel.

Locate the white reset switch on the high pressure cutout. Press in on the switch until a "click" is heard. If the reset does not "click" the cutout was not activated and the unit shut down occurred for another reason.

Section VI Special Features

Automatic Refill Device (Optional)

The automatic refill device is designed to maintain the correct level of cooling fluid in the reservoir. The device consists of a float switch in the reservoir and a solenoid valve on top of the reservoir. If the cooling fluid level falls, the float switch will drop, opening the solenoid valve and allowing make-up fluid to fill the reservoir. Once the cooling fluid level reaches the proper level, the float switch will rise and the solenoid valve will close.

The plumbing connection for the refill device is located at the right rear corner of the unit and is labelled AUTO REFILL. This connection is a $^{3}/_{8}$ inch OD stainless steel barbed fitting.

Connect this fitting to a make-up fluid source using $^{5}/_{16}$ or $^{3}/_{8}$ inch ID flexible tubing. Make sure all tubing connections are securely clamped.

Tubing is available from NESLAB. Contact our Sales Department for more information (see Preface, After-sale Support).

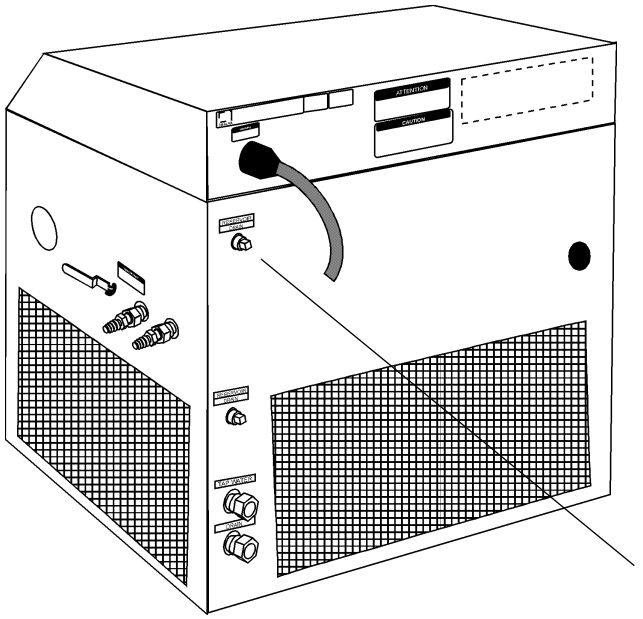

Heater Package (Optional)

The heater package option consists of an immersion heater in the unit's fluid reservoir, a high temperature limit device, a solid state zero-crossing relay, a heater ENABLE/DISABLE switch and a FAULT indicator. The ENABLE/DISABLE switch and the FAULT indicator are located on a small control box appended to the right side of the case top. The FAULT indicator will light if the high temperature limit device is tripped. The high temperature limit device will disconnect power to the heater if the heater surface temperature exceeds a preset limit.

Heater Package Control Box (Typical)

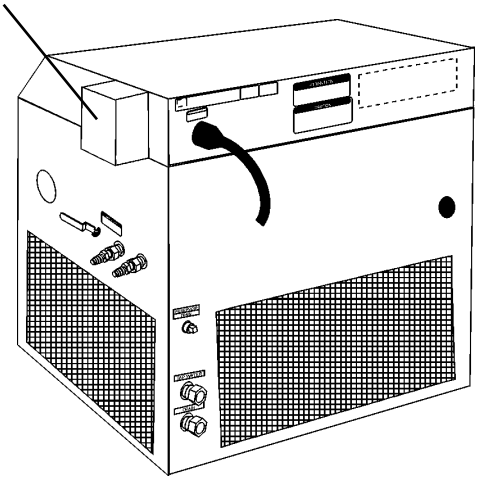

With the ENABLE/DISABLE switch set to ENABLE, the heater will cycle on and off under the control of the temperature controller. With the switch in the DISABLE position, the heater will remain off.

The heater high temperature limit device senses the surface temperature of the heater. If the heater temperature becomes too high, the limit device opens a mechanical relay to remove power from the heater.

The heater surface temperature may operate several degrees higher than the reservoir fluid. The limit device is factory set to a temperature above the upper limit of the temperature controller's range.

For personal safety and equipment reliability, the following procedure must only be performed by a qualified technician. Contact our Service Department for assistance (see Preface, After-sale Support).

To reset a tripped temperature limit device, lift and open the case top. The case top is secured to the unit base by a hinge between the case top and the base (along the rear of the unit), and by two spring clips located at the front corners. To gain access to the temperature limit device, disengage the spring clips with a flat bladed screw driver and lift the front of the case top and tilt it back. A support brace, located on the right side of the inner case, will stop and support the case top.

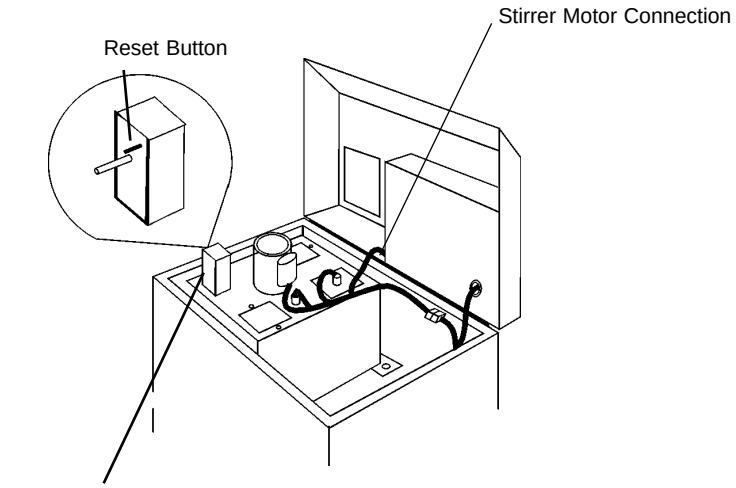

You must identify and correct the fault before restarting the unit.

The protection device and the heater power connections are located in a small stainless steel box on top of the fluid reservoir. The protection device has a reset button and a temperature limit adjustment shaft. Press the reset button to restore operation.

Some units equipped with heaters do not have a power cable. Installation of the cable is your responsibility. Wire the unit in conformance to local, state and federal electrical codes. Double check all wiring to make sure it is properly connected and protected from the elements.

The unit construction provides extra protection against the risk of electric shock by grounding appropriate metal parts. The extra protection may not function unless the power cord is connected to a properly grounded outlet. It is your responsibility to assure a proper ground connection is provided. For personal safety and equipment reliability, the following procedure should only be performed by a qualified technician.

To access the power cable connection box and install the cable:

- Lift the unit's bonnet.
- Remove the panel under the right half of the bonnet by removing the screws and the stirrer motor connection. (The stirrer motor connection is located at the lower left corner of the bonnet, see illustration above.)
- Remove the plastic plug on the rear of the bonnet. We recommend that you install an electrical conduit in place of the plastic plug.
- Insert your cable through the conduit.
- Locate the connection box and connect your cable to L1 and L2 (both connections are labeled) and to the ground stud (not labeled).
- Replace the panel and stirrer motor connection.

External Pressure Regulator (Optional)

For applications requiring a maximum pressure less than 55 psi, an External Pressure Reducer (EPR) is available. An EPR allows an adjustable operating pressure of 10 to 50 psi. If the pressure of the fluid leaving the unit exceeds the valve setting the relief valve will bypass the fluid back into the unit to relieve the pressure. The pressure of the system is determined by the back pressure of the connected equipment and the flow rate of the recirculating fluid to your application.

Connect the EPR assembly as shown below. Tighten the hose clamps tight enough to prevent leakage. Do not over-tighten or the clamps will “bite” into the flexible tubbing and can cause excessive wear.

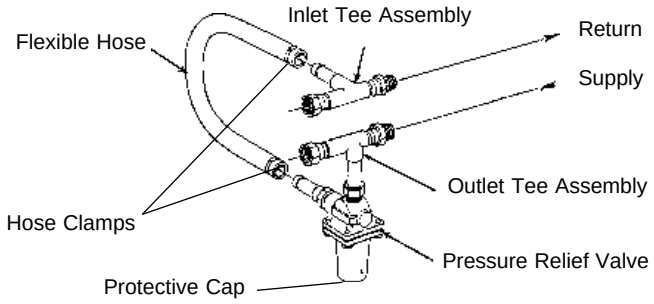

Connect the outlet tee assembly to the inlet of your application. Connect the inlet tee assembly to the outlet of your application.

Adjustment

When adjusting the relief valve some leaking may occur, place a container under the valve during adjustment.

Remove the protective cap and locate a threaded fitting with a slot for a large screwdriver. Hold the threaded fitting in place and loosen the lock nut on the valve body until it is almost flush with the threaded fitting. Unscrew the threaded fitting three to four turns. (If the threaded fitting unscrews completely from the valve housing, screw it back in two to three turns.)

To simulate blockage, close (or pinch off) the hose between the EPR outlet tee assembly and your application. Monitor the operating pressure of the HX unit. Turn the threaded fitting until the desired relief pressure is set (the EPR valve cannot be set lower than the total back pressure of your instrument, or flow will not be received).

Tighten the locknut to secure the position of the threaded fitting. Open the hose between the EPR outlet tee assembly and your application.

Pump Motor Overload Protector

Refer to the serial number label on the rear of the case top for the unit's specific electrical requirements; specifically, identify the phase requirements.

The overload protector prevents the pump motor from exposure to excessive current. If an overload fault occurs, due, for example, to excessive pressure or flow, or excessive ambient temperature, the overload protector will shut off the pump motor. The overload protector will automatically reset after approximately one to two minutes.

If a fault occurs, a red lamp on the protector enclosure will light while the pump motor is off. The lamp goes out once the protector resets.

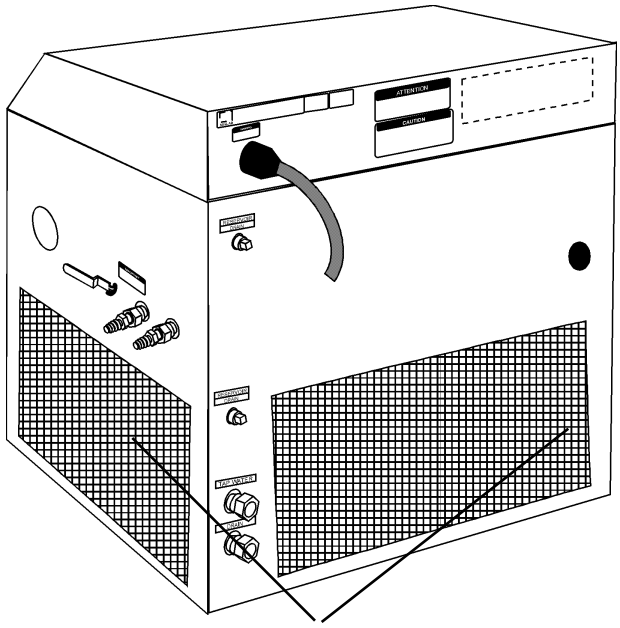

The pump motor overload protector is located directly under the fluid reservoir. It is in the left rear corner for HX200s and HX300s units. It is at the side access panel for HX500s and HX750s units.

The overload protector can be adjusted to require manual resetting after an overload fault. Contact our Service Department for adjustment instructions (see Preface, After-sale Support).

The unit will shut down in the event of a low flow fault. Manually restart the unit after the protector resets (if the RESTART switch on the Interface Access. panel is in the AUTO position, the unit will restart automatically).

If you are unsure of the phase of the pump motor in your unit, contact our Service Department (see Preface, After-sale Support).

Remote Condenser (Optional)

Units with the optional remote air-cooled condenser are equipped with high and low refrigeration pressure monitors. The monitors are connected internally to a pressure gauge that monitors refrigeration pressure at the suction side of the compressor. The monitors protect the refrigeration system from operating under excessively high and low refrigeration pressures. A pressure fault occurs when the refrigeration pressure exceeds the set pressure limit.

The status of the monitors is indicated by the COMPRESSOR LOW PRESSURE and COMPRESSOR HIGH PRESSURE indicators located on the operator panel.

In the event of either a low or high refrigeration pressure fault, the unit will shut down. The unit must be manually restarted after the cause of the fault has been identified and corrected. If both indicators are lit simultaneously, an interruption in the main power supply has occurred.

Nitrogen Purge (Optional)

Units equipped with nitrogen purge valves are designed to accept a constant flow of dry nitrogen into the reservoir. The nitrogen blankets the cooling fluid reducing fluid evaporation.

Remove the reservoir cover by removing the screws. Fill the reservoir with fluid. Replace the reservoir cover and screws. Connect the nitrogen line to the valve on the reservoir cover.

A pressure regulator, set to 0.5 psig (0.35 kg/cm^3) or lower, should be used to prevent fluid overflow.

Particulate Filters (Optional)

Some custom units are fitted with particulate filter assemblies attached to the supply side of the recirculation water. The frequency for cleaning/changing the filter depends on your usage. Should the unit's performance be degraded, check the filter.

Filters are available from NESLAB, contact our Customer Service Center. Before calling refer to the serial number label on the rear of the unit to obtain the following information:

-BOM number
-Serial number

Section VII Maintenance

Service Contracts

NESLAB offers on-site Service Contracts that are designed to provide extended life and minimal down-time for your unit. For more information, contact our Service Department (see Preface, After-sale Support).

Condenser Cleaning (Air-cooled units only)

For proper operation, the unit needs to pull substantial amounts of air through a finned condenser. A build up of dust or debris on the fins of the condenser will lead to a loss of cooling capacity.

The frequency of cleaning depends on the operating environment. It is recommended that a visual inspection of the condenser be made monthly after initial installation. After several months, the frequency of cleaning will be established.

For "standard" air-cooled units, periodic vacuuming of the fins on the condenser is necessary.

For units with the optional remote air-cooled condenser, remove any debris from around the condenser site. If a visible accumulation of dust or dirt is found on the condenser fins, the condenser should be cleaned with a condenser cleaning solvent and rinsed with water.



Exercise caution not to damage the condenser fins or coil. Condenser fin or coil damage can result in a loss of performance and, in extreme cases, refrigeration system failure.

Algae

To restrict the growth of algae in the fluid reservoir, it is recommended that the reservoir cover be kept in place and that all recirculation lines be opaque. This will eliminate the entrance of light which is required for the growth of most common algae.

NESLAB recommends the use of Chloramine-T, one gram per gallon.

Section VIII Service

For personal safety and equipment reliability, the following procedure should only be performed by a qualified technician. Contact our Service Department for assistance (see Preface, After-sale Support).

Configuration

Case Top

The unit has a hinged case top to allow service access. The case top is secured to the top of the unit base by a hinge between the case top and base (along the rear of the unit), and by two spring clips located at the front corners, see illustration on page 3. To gain access to the pump assembly or the reservoir area, disengage the spring clips with a flat bladed screw driver and lift the front of the top cover and tilt it back. A support brace, located on the right side of the inner base, will stop and support the case top. Ensure the spring clips engage when the top is lowered back into position.

Reservoir Cover

Access to the inside of the fluid reservoir is necessary to clean the reservoir. The figure below illustrates a typical layout of the components mounted on top of the reservoir cover. The component layout varies depending on the unit size. If you are unable to identify the components on your unit's reservoir cover, contact our Customer Service Department for assistance (see Preface, After-sale Support).

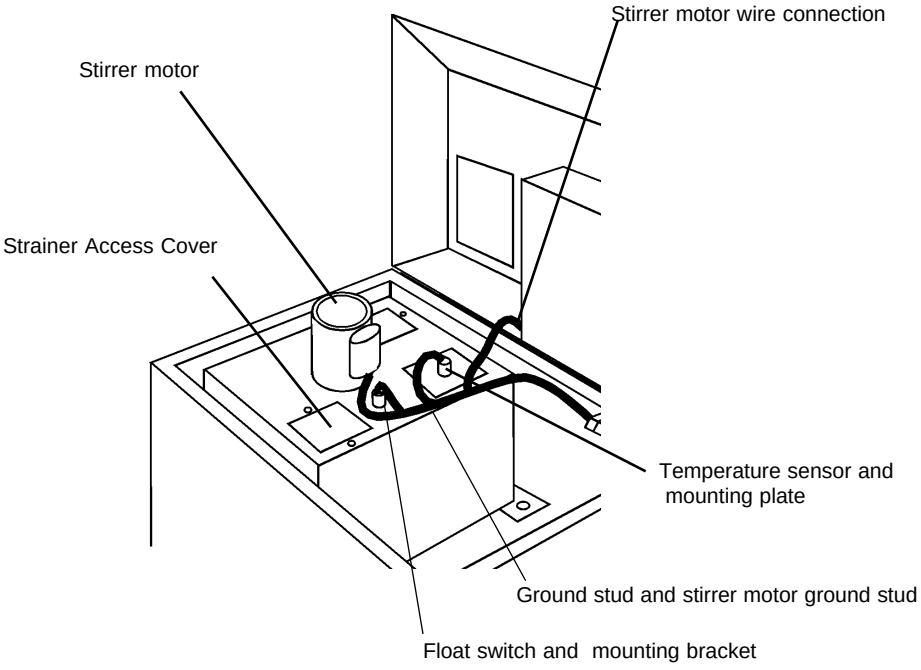

Disconnect the unit from its power source before removing the reservoir cover.

Locate the reservoir stirrer motor (units with plate heat exchangers and HX-75s do not have a stirrer motor; HX-500s and HX-750s have two stirrer motors). Disconnect the motor wires at the plug located on the side of the electrical box cover. Also disconnect the green ground wire that connects the ground stud on the reservoir cover to the unit's grounding bar.

Locate the float switch mounting bracket. Remove the two stainless steel screws that secure the bracket to the reservoir cover. Carefully remove the mounting bracket and place the assembly in an area adjacent to the reservoir. Make sure not to strain the connecting wires.

Locate the temperature sensor mounting plate. Remove the two stainless screws that secure the bracket to the reservoir. Carefully remove the sensor mounting plate with the sensor(s) attached and place the assembly in a protected area adjacent to the reservoir. Make sure not to damage the sensor(s) or strain the connecting wires.

Remove the stainless steel screws that secure the reservoir cover to the reservoir. Remove the cover and place it to one side in a manner that protects the stirrer motor blades from being bent.

Service Access Panels
Service access panels on your unit allow easy access to the pump and refrigeration assemblies. Panel location varies with the size and type of unit. The panels are designed to allow removal without disconnecting the HX from the instrument being cooled.



Disconnect the unit from its power source before removing any of the access panels.

Reservoir Cleaning

Periodic reservoir cleaning is necessary. We recommend that a visual inspection of the reservoir be made monthly after initial installation. After several months, the frequency of cleaning will be established.



Disconnect the unit from its power source and drain the reservoir before cleaning the reservoir.

Lift the top cover to access the reservoir. Remove the reservoir cover as described in Section VIII, Configuration. Clean the reservoir with a cleaning fluid compatible with the recirculating system and the cooling fluid.



Do not use steel wool or other abrasive materials. They can scratch the stainless steel surface and initiate rusting.

When the reservoir is clean, re-assemble the cover assembly and close the case top. Refer to Section III, Filling Requirements for instructions on replacing the cooling fluid.

Pump and Flow Switch Strainers

The pump and flow switch strainers require cleaning. If debris is drawn into the recirculating system, the pump strainer will prevent the material from being drawn into the pump and damaging the pump vanes and the filter strainer will prevent material from clogging the flow switch.

After initial installation, the strainers may become clogged with debris and scale. Clean the strainer after the first week of installation. After this first cleaning, a monthly visual inspection is recommended. After several months, the frequency of cleaning will be established.

Disconnect the power cord from the power source and drain the fluid reservoir before cleaning the strainer. Do not operate the unit with any strainer removed.

PD-2 and TU Pumps

The wire mesh pump strainer is located in the reservoir on the pump suction line. Remove the strainer access panel located on top of the reservoir cover to access the strainer.

Cover the strainer with a plastic bag to help catch any debris which may become free.

Unscrew the strainer and rinse it with water. Replace the strainer. Refer to Section III, Filling Requirements for instructions on replacing the cooling fluid.

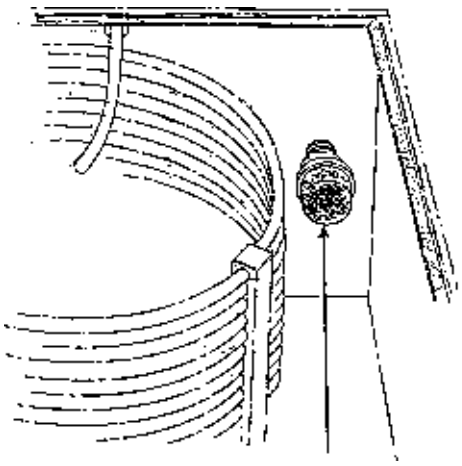

Pump Strainer

PD-1 Pumps

The wire mesh pump strainer is located on the inlet (suction) side in the pump head.

Lift the case top and remove the top right access panel to access the pump area. Unscrew the larger of the two acorn nuts on the pump head and remove the screen. Clean the screen by rinsing it with water.

When the screen is clean, replace it in the pump head and tighten the acorn nut. Replace the access panel and close the case top.

Refer to Section III, Filling Requirements for instructions on replacing the cooling fluid.

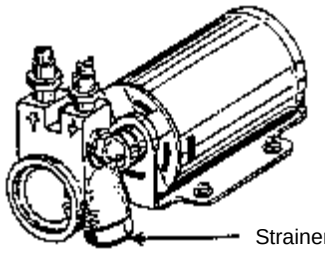

Flow Filter Strainer

The flow filter strainer is located behind the top right access panel on the inlet side of the flow switch.

Unscrew the locknut and remove the screen. Clean the screen by rinsing it with water.

Replace the strainer and locknut. Refer to Section III, Filling Requirements for instructions on replacing the cooling fluid.

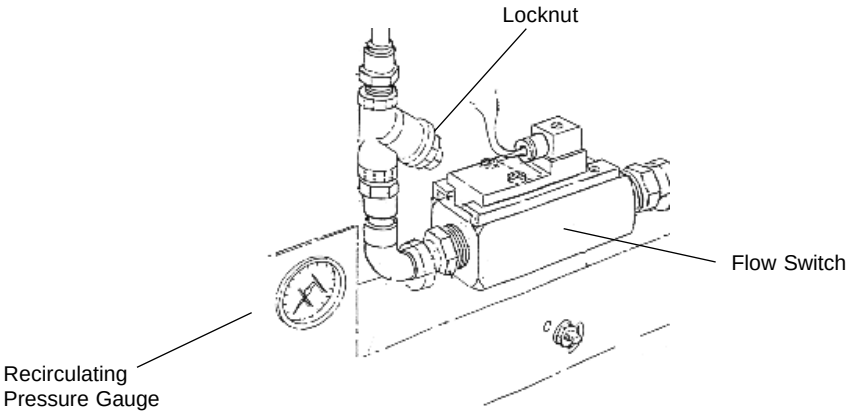

Pump Motor Lubrication

Units with PD-1 and PD-2 pumps require pump motor lubrication. Refer to the pump identification label on the rear of the case top to identify the specific pump in your unit.

Motors used to drive the pump are manufactured by several companies. These motors use sleeve type bearings with large oil reservoirs. Oiling instructions are generally posted on each motor. In the absence of instructions, add approximately 30 to 35 drops of SAE 20 non-detergent oil in each fill hole on the following schedule (SAE 20 = 142 CS viscosity):

Duty Cycle	Oiling Frequency
Continuous	Once every year
Intermittent	Once every 2 years
Occasional	Once every 5 years

Fill Holes (Typical)

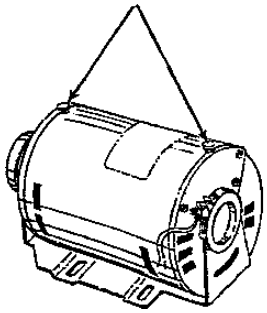

Phase Rotation

Three phase units with three phase pump motors are equipped with a phase rotation interlock. Refer to the serial number label on the rear of the case top for the specific electrical requirements of your unit. The interlock prevents the unit from starting if the phase rotation is wrong. If the unit will not start, see Section IX, Checklist. If the options in the checklist are not applicable, the problem may be phase rotation.

Disconnect the unit from its power source, remove the rear panel and the junction box cover (if so equipped). Reverse any two line conductors on the line side of the relay.

Never remove the green ground wire.

Replace the junction box and the rear panel. Reconnect the unit to its power source. If the unit will not start, contact our Customer Service Department.

Suction Discharge Pressue Speed Check (R-22)

Air-Cooled Standard and High Temperature Units (All Pump Types)[1]

Unit	Suction(psi)	Discharge(psi)	Speed Check(°C/Minute)
HX-75	77 - 84	225 - 250	1.5 - 1.7
HX-100	75 - 83	245 - 265	1.3 - 1.6
HX-150	70 - 73	240 - 270	2.0 - 2.5
HX-200	85 - 105	230 - 255	1.6 - 1.9
HX-300	84 - 105	270 - 305	2.4 - 2.7
HX-500	80 - 90	215 - 235	2.0 - 2.4
HX-750	65 - 75	185 - 215	

Water-Cooled Standard and High Temperature Units (All Pump Types)[2]

Unit	Suction(psi)	Discharge(psi)
HX-75	72	170
HX-100	86 - 92	180
HX-150	65	175
HX-200	85 - 90	180
HX-300	73 - 78	180
HX-500	75 - 82	150
HX-750	50 - 60	180

1. 27°C unit temperature, water in reservoir, access panel removed.
2. 25°C unit temperature, water in reservoir.

NOTE: Refrigerant R-22. For low temperature units please call NESLAB.

Section IX Troubleshooting

Checklist

Unit will not start

For CE Mark units, ckeck the circuit breaker setting on the side of the bonnet.

Check power source for correct voltage output. Refer to the serial number label on the rear of the unit for the specific electrical requirements of your unit. Power source must be specified voltage, ±10%.

Check house circuit breaker.

On three phase units with three phase pump motors, the phase rotation may be reversed (see Section VIII, Phase Rotation).

On water-cooled units, ensure the facility water is on and make sure the cooling water supply is connected to the TAP WATER connection, not the DRAIN connection. Check the High Pressure Cutout, it may need to be reset (see Section V, Operation).

Unit will not circulate fluid

Check the tubing, flow switch strainer, and any optional filters/cartridges between the unit and your application for obstructions or for cleaning/ replacement.

Units with PD and TU type pumps may require pump strainer cleaning. Refer to the pump identification label on the rear of the case top to identify the specific pump in your unit. For instructions on cleaning the pump strainer, see Section VIII, Pump Strainer.

On units with CP type pumps, if the back pressure of the instrument being cooled is greater than the maximum pressure of the pump, adequate flow may not be obtained. Check for obstructions in the tubing.

Inadequate temperature control

Make sure the installation of the unit is in compliance with the conditions described in Section III.

Make sure the heat load of the instrument being cooled is not greater than the cooling capacity of the unit.

When the unit is shut off, wait approximately five minutes before restarting. This allows time for the refrigeration pressures to equalize. If the pressures are not allowed to equalize, the compressor will short-cycle (clicking sound) and no cooling will occur.

Service Assistance

If, after following these troubleshooting steps, your unit fails to operate properly, contact our Service Department for assistance (see Preface, After-sale Support). Before calling, please obtain the following information:

- BOM number
- Serial number

Section X Diagrams

Refrigeration Flow Diagram
(HX-75 through HX-150)

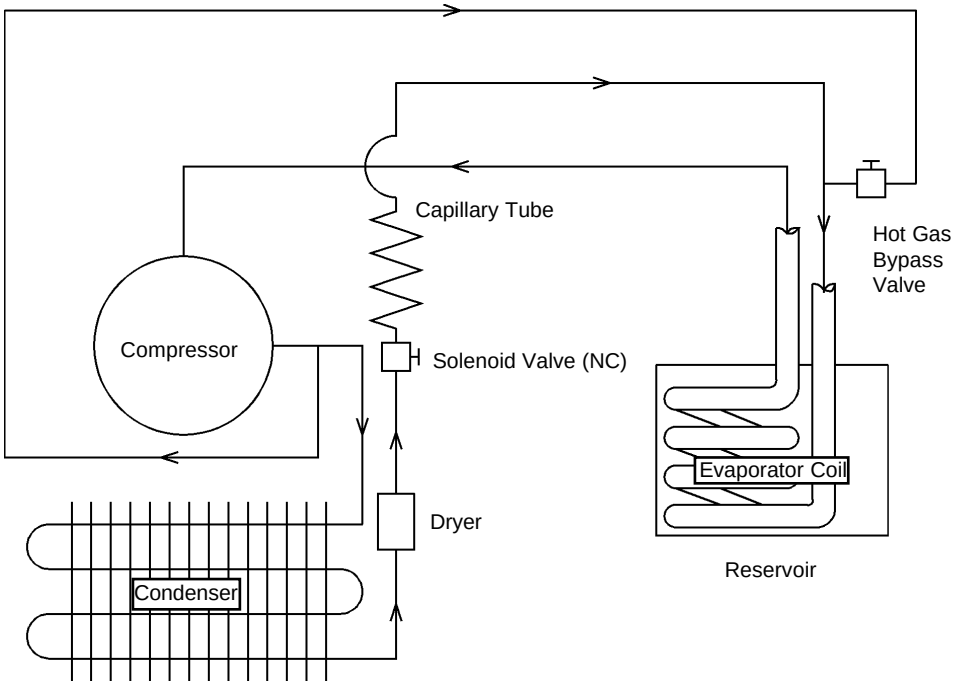

Refrigeration Flow Diagram
(HX-200 through HX-750)

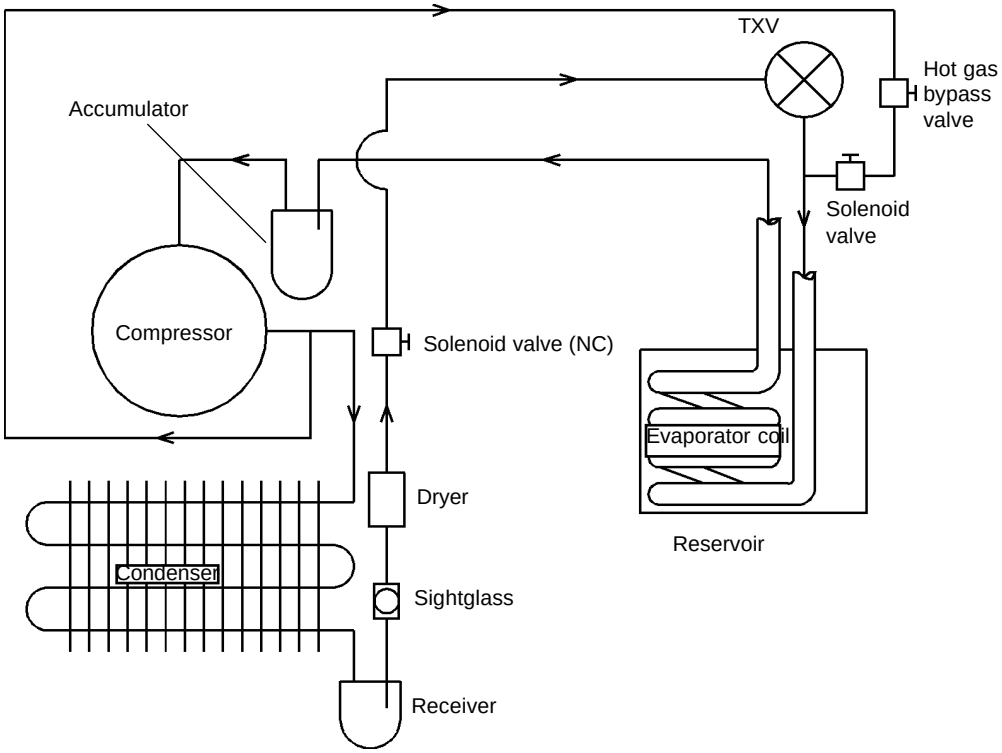

Pump Flow Diagram (CP Pumps)

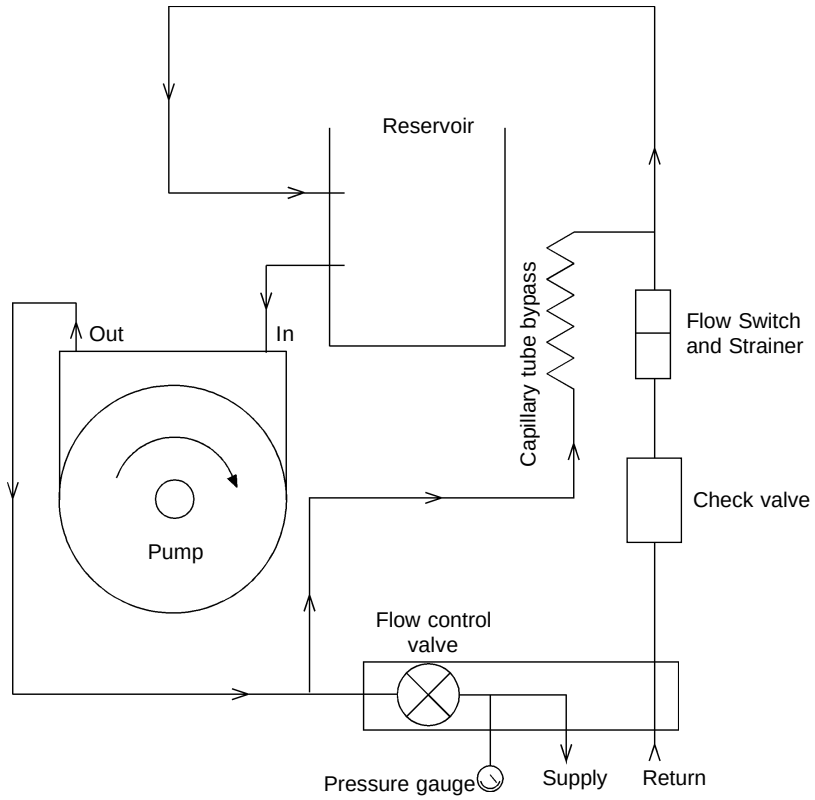

Pump Flow Diagram (PD and TU Pumps)

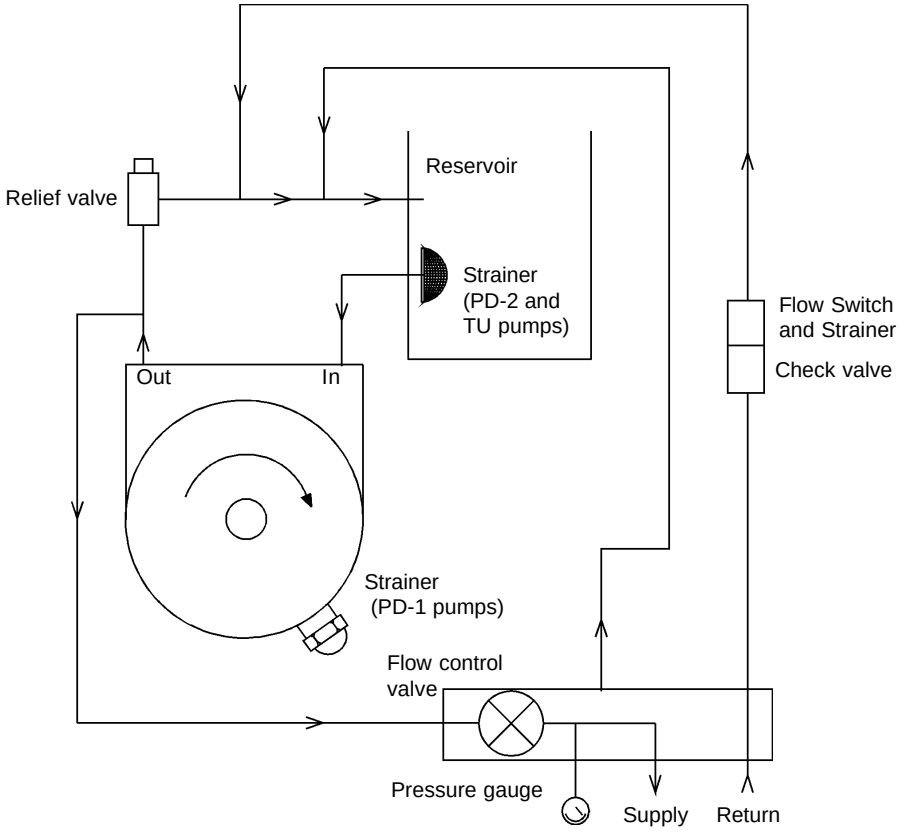

Dimensions

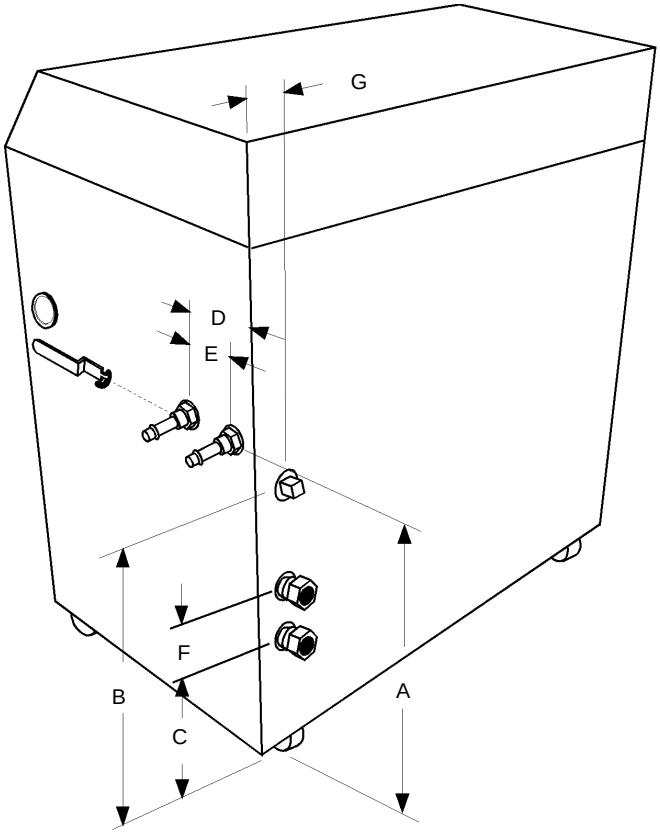

Unit Dimensions	HX75	HX100/HX150	HX200/HX300	HX500/HX900WC	HX750*/HX900AC
Dimension A	16	20	25 3/8	25¼	41
Dimension B	15¼	19¼	23½	21 1/8	33¾
Dimension C	8¼	9¼	8 3/8	5½	NA
Dimension D	7¼		7½	9½	
Dimension E	3				
Dimension F	3		3	5½	NA
Dimension G	1 3/8		1½	2¼	NA
Dimension H	2½		2 3/8	2¼	
Dimension I	24 7/8	27½	31½	35 1/8	35
Dimension J	48½	54	64 7/8	73½	86¼
Crate Dimensions (H x W x D)	46x30x27	49x33x29	55x40x33	61x54x36	74x54x36

* HX-750 air-cooled units. HX-750 water-cooled are the same size as the HX-500 units.

1. Dimensions are given in inches, ±1/8 inch.
2. Model HX-750 with a water-cooled condenser has the same dimensions as an HX-500.
4. Dimension A is the distance from the floor to the center of the SUPPLY and RETURN connections.
5. Dimension B is the distance from the floor to the center of the DRAIN connection.
6. Dimension C is the distance from the floor to the center of the tap water outlet connection.
7. Dimension D is the distance from the center of the SUPPLY connection to the rear of the unit case.
8. Dimension E is the distance between the SUPPLY and RETURN connections
9. Dimension F is the distance between the center of the TAP WATER connections (upper inlet and lower outlet).
10. Dimension G is the distance from the edge of the unit case to the center of the three plumbing connections.
11. Dimension H is the distance from the floor to the bottom of the case, height of the castors (not shown).
12. Dimension I is the depth of the unit with the case top open (not shown).
13. Dimension J is the height of the unit with the case top open (not shown).

AppendixA Additional Electrical Information

REMOTE CONT. Receptacle

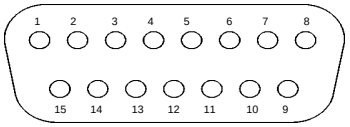

15 pin D-subminiature male receptacle

Pin #	Alarm circuitry	Control circuitry
1		Chassis ground.
2		ON/OFF control circuit power (+12VDC, unregulated). See ON/OFF/START Logic.
3	DC for LED indicators (+5VDC, current limited through 47Ω resistor).	
4	Low level switch (+5VDC, current limited through 680Ω resistor).	
5		START button connection. See ON/OFF/ START Logic.
6		Heater ON command, solid state relay drive (+8 to +13 VDC, current limited through 390Ω resistor). Contact our Sales Department for more information.
7	Reserved.	
8	AT TEMPERATURE contact (24V, 1A maximum. AC and DC). When the fluid temperature is between the high and low temperature limits, this pin is connected to pin 15. See Relay Contact Logic.	
9	Common for DC power supplies, grounded.	
10	FAULT indicator drive (-). Connect LED cathode here, anode to pin 3, for display of FAULT status. See External Status Indicator Logic.	
11	NOT AT TEMPERATURE indicator drive (-). Connect LED cathode here, anode to pin 3, for display indicating when the fluid temperature is not between the high and low temperature limits. See External Status Indicator Logic.	
12	NORMAL indicator drive (-). Connect LED cathode here, anode to pin 3, for display indicating when all status monitors (High Temperature, Low Temperature, Low Level, Low Flow) are normal. See External Status Indicator Logic.	
13		RUN switch connection. See ON/OFF/ START Logic.
14	NORMAL contact (+24V, 1A maximum. AC and DC). When all status monitors are normal (see pin 12) this pin is connected to pin 15. See Relay Contact Logic.	
15	Relay contact common connection.	

The exclusion of alarm circuitry is an available option for Series II temperature controllers. The alarm circuitry pin connections are not used on these controllers.

Remote Connector Circuitry

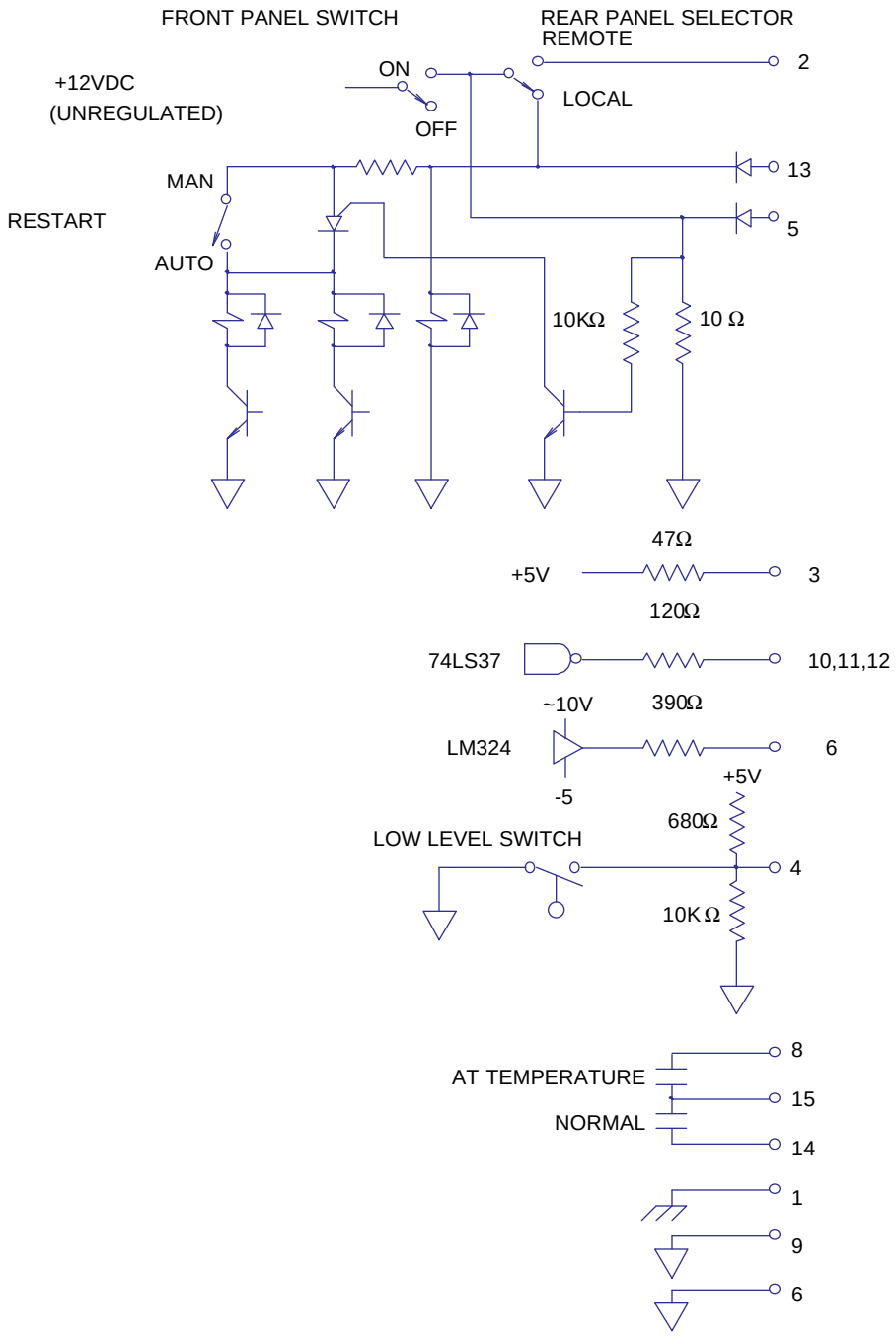

ON/OFF/START Logic

When the START/STOP LOCAL/REMOTE switch is set to LOCAL, the operator panel ON/OFF/START switch controls the unit.

When the LOCAL/REMOTE switch is set to REMOTE, the operator panel ON/OFF/START must be in the ON position for the unit to operate. An external switch is necessary to complete the circuit and start the unit.

If the operator panel ON/OFF/START switch is OFF, then external switches cannot start the unit. This allows an operator or service person at the unit to override the external controls and shut down the unit.

If the operator panel ON/OFF/START switch is ON, the external ON/OFF and START switches function just like the operator panel switch.

If the Interface Access. panel RESTART AUTO/MAN switch is set to AUTO, the START switch is not needed to start the unit. It will start when the external ON/OFF switch is switched to ON or when power is restored after an outage.

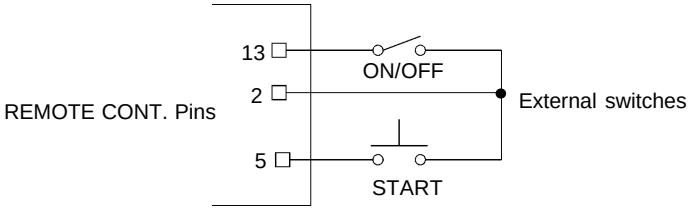

External Status Indicator Logic

The FAULT indicators light if one of the conditions monitored by the alarm circuit (High and Low Temperature, Low Level, and Low Flow) has occurred.

To prevent nuisance alarms, this signal does not indicate a FAULT condition when the unit is first turned on and the fluid temperature is outside the alarm limits. This situation will typically occur when the high temperature limit is set to a temperature below ambient. Once the fluid temperature is within the high and low temperature limits, subsequent excursions beyond those limits will produce a FAULT indication.

The NOT AT TEMPERATURE indicator lights when the operating temperature is not between the high and low temperature limits.

The NORMAL indicator lights when all four status monitors are normal (no faults). The NORMAL indicator logic is similar to the FAULT indictor logic; a temperature out of limits when the HX is first turned on is considered normal (not a fault).

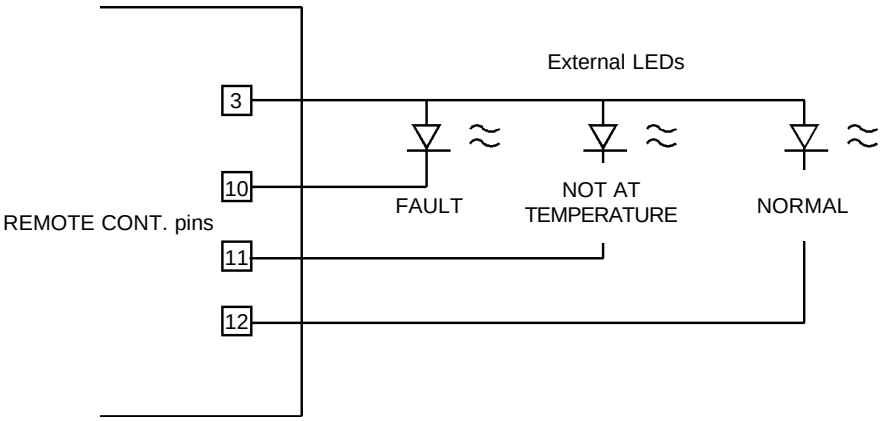

Relay Contact Logic

The NORMAL relay contacts are closed if all four status monitors are normal (no faults).

To prevent nuisance alarms, the contacts are closed when the unit is first turned on and the fluid temperature is outside the alarm limits. This situation will typically occur when the high temperature limit is set to a temperature below ambient. Once the fluid temperature is within the high and low temperature limits, subsequent excursions beyond those limits will cause the contacts to open.

The AT TEMPERATURE contacts are closed if the fluid temperature is between the high and low temperature limits.

In the example circuit shown below, CR1 is energized when the unit is ON and there are on abnormal conditions. CR2 is energized when there are no abnormal conditions AND the fluid temperature is within limits. CR1 can serve as an alarm activator, while CR2 can indicate that the unit is ready to provide cooling fluid to the instrument being cooled.

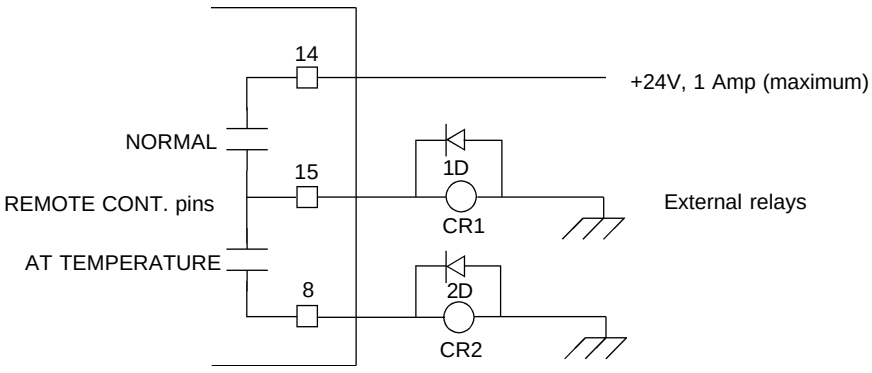

Low Level Switch/Auto Refill

In the example circuit below, when the fluid level in the reservoir drops, DC is applied to the CRE control input to energize the solenoid valve. The valve opens to fill the reservoir. When the fluid level rises, CRE is turned off. If the level does not rise after about 30 seconds, a low level alarm occurs.

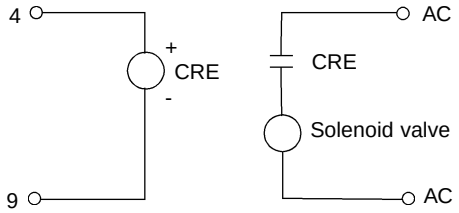

ACCESS Receptacle

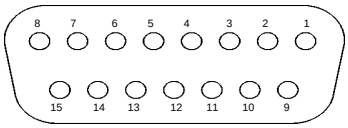

15 pin D-subminiature female receptacle

Pin #	Function
1	Chassis ground.
2	No connection.
3	Span +. Indicates the maximum setpoint value the unit can be set to operate. The temperature scale is 10mV/°C, referenced to analog ground, pin 6 (example: +350mV =+35.0°C).
4	Span -. Indicates the minimum setpoint value the unit can be set to operate. The temperature scale is 10mV/°C, referenced to analog ground, pin 6 (example: +50mV = +5.0°C).
5	AT TEMPERATURE indicator solid state relay drive (TTL output. Part of the alarm circuitry in the REMOTE CONT receptacle). Connect solid state relay drive (-) here, (+) to pin 3 on the REMOTE CONT receptacle to energize relay when the fluid temperature is between the high and low temperature limits. Pin reads 0V when fluid temperature is between limits, -5VDC when out of limits. 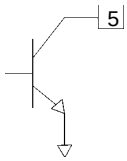
6	Analog ground. The analog ground is physically separated from the power ground throughout the unit. To prevent offsets that result ground currents, the analog and power ground are only connected at the power supply. Analog ground should only be used as a reference pin when no current is flowing.
7	Sensor temperature (current limited through 2.7K OHM resistor). The fluid temperature, as measured by the controller's sensor located in the reservoir, can be read at this pin. The temperature scale is 10mV/°C, referenced to analog ground, pin 6 (example: +150mV = +15.0°C).
8	Setpoint out. The present temperature setpoint can be read at this pin. The temperature scale is 10mV/°C, referenced to analog ground, pin 6 (example: +150mV = +15.0°C).
9	Power ground. This pin should be used for functions that require the unit to draw input or output current. See pin 6.
10	No connection.
11	No connection.

Pin#	Function
12	Digital display (input only). An external voltage can be displayed on the operator panel digital display by applying the voltage to this pin. The display has a low input resistance and a full scale rating of ±1.99VDC. Input is referenced to analog ground, pin 6. The maximum voltage applied to the display should be limited to ±2VDC.
13	-5V. Power supply of -5VDC (15mA maximum).
14	+5V. Power supply of +5VDC (15mA maximum).
15	Setpoint in. The temperature setpoint can be controlled by applying a known voltage to this pin. The temperature scale is 10mV/°C, referenced to analog ground, pin 6 (example: +230mV = +23.0°C. The DISABLE/ENABLE switch must be in the ENABLE position to control the setpoint from this pin.

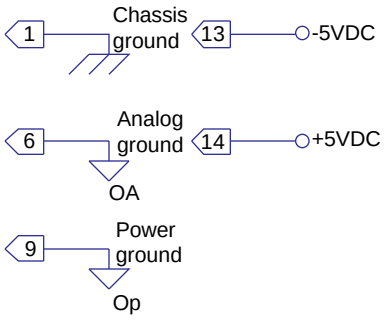

Access Receptacle Equivalent circuits

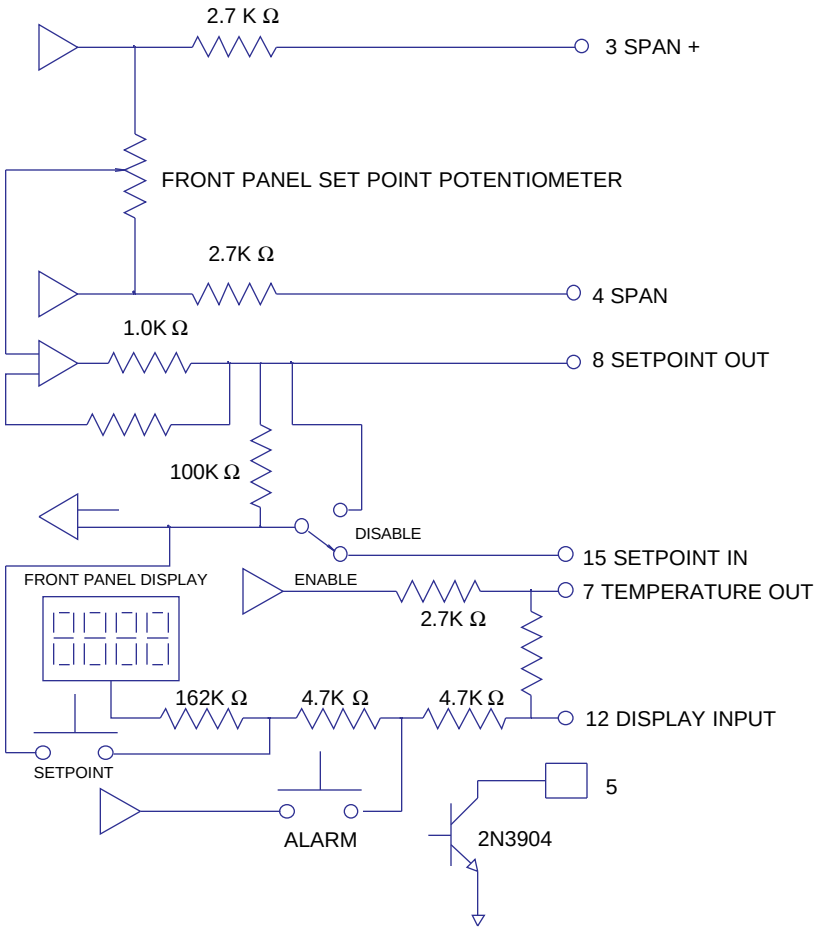

Access Receptacle Circuitry Details

Appendix B DeltaTemp Programming Software

DeltaTemp programming software is now available for free download from NESLAB ONLINE BBS (Bulletin Board System) at 603-427-2490.

DeltaTemp software allows you to write custom temperature programs for NESLAB digital units (any unit with a digital temperature readout AND a 10-15 pin INTERFACE port). The menu-driven program provides a table format for entering temperature parameters and a visual graph confirmation of the program you have designed. Program time can range from 0 to 999 minutes with unlimited looping. Choose upper and lower temperature limits and monitor system status with an audible alarm. DeltaTemp can also record your results on a printed graph or file. DeltaTemp is a DOS program, and requires an IBM or 100% compatible computer.

DeltaTemp may require use of a computer interface device, depending on which NESLAB unit is being used. Refer to the setup diagram in the DeltaTemp folder for full details.

To download the software, go to: CONFERENCES / SOFTWARE / DeltaTemp.

The folder also contains the operating manual, setup diagrams, application notes, and directions on making your own interface cable.

NESLAB ONLINE is a FirstClass® system accessible by general terminal software (Windows Terminal accessory, ClarisWorks Communications, Z-Term, Pro-Comm, or similar).

To use the full graphics and features of the BBS we recommend using FirstClass® Client software. FirstClass® Client is available for Macintosh or Windows platforms. It is available from many sources:

NESLAB ONLINE
Mac: Conferences/Software/Macintosh
Windows: Conferences/Software/Windows

AMERICA ONLINE
Mac: Computing/software center/mac communications forum/industry connection/softarc
Windows: Computing/software center/communications programs

COMPUSERVE:
Mac: TWEUROPA/Teletools/FCMAC.ZIP
Windows: PCBBS/BBS programs/FC300.EXE

WORLD WIDE WEB
http://www.softarc.com/try.htm

WARRANTY

NESLAB Instruments, Inc. warrants for 12 months from date of shipment any NESLAB unit according to the following terms.

Any part of the unit manufactured or supplied by NESLAB and found in the reasonable judgment of NESLAB to be defective in material or workmanship will be repaired at an authorized NESLAB Repair Depot without charge for parts or labor. The unit, including any defective part must be returned to an authorized NESLAB Repair Depot within the warranty period. The expense of returning the unit to the authorized NESLAB Repair Depot for warranty service will be paid for by the buyer. NESLAB's responsibility in respect to warranty claims is limited to performing the required repairs or replacements, and no claim of breach of warranty shall be cause for cancellation or recision of the contract of sales of any unit.

With respect to units that qualify for field service repairs, NESLAB's responsibility is limited to the component parts necessary for the repair and the labor that is required on site to perform the repair. Any travel labor or mileage charges are the financial responsibility of the buyer.

The buyer shall be responsible for any evaluation or warranty service call (including labor charges) if no defects are found with the NESLAB product.

This warranty does not cover any unit that has been subject to misuse, neglect, or accident. This warranty does not apply to any damage to the unit that is the result of improper installation or maintenance, or to any unit that has been operated or maintained in any way contrary to the operating or maintenance instructions specified in NESLAB's Instruction and Operation Manual. This warranty does not cover any unit that has been altered or modified so as to change its intended use.

In addition, this warranty does not extend to repairs made by the use of parts, accessories, or fluids which are either incompatible with the unit or adversely affect its operation, performance, or durability.

NESLAB reserves the right to change or improve the design of any unit without assuming any obligation to modify any unit previously manufactured.

THE FOREGOING EXPRESS WARRANTY IS IN LIEU OF ALL OTHER WARRANTIES, EXPRESSED OR IMPLIED, INCLUDING BUT NOT LIMITED TO WARRANTIES OR MERCHANTABILITY AND FITNESS FOR A PARTICULAR PURPOSE.

NESLAB'S OBLIGATION UNDER THIS WARRANTY IS STRICTLY AND EXCLUSIVELY LIMITED TO THE REPAIR OR REPLACEMENT OF DEFECTIVE COMPONENT PARTS AND NESLAB DOES NOT ASSUME OR AUTHORIZE ANYONE TO ASSUME FOR IT ANY OTHER OBLIGATION.

NESLAB ASSUMES NO RESPONSIBILITY FOR INCIDENTAL, CONSEQUENTIAL, OR OTHER DAMAGES INCLUDING, BUT NOT LIMITED TO LOSS OR DAMAGE TO PROPERTY, LOSS OF PROFITS OR REVENUE, LOSS OF THE UNIT, LOSS OF TIME, OR INCONVENIENCE.

This warranty applies to units sold in the United States. Any units sold elsewhere are warranted by the affiliated marketing company of NESLAB Instruments, Inc. This warranty and all matters arising pursuant to it shall be governed by the law of the State of New Hampshire, United States. All legal actions brought in relation hereto shall be filed in the appropriate state or federal courts in New Hampshire, unless waived by NESLAB.

HX Series II
Recirculating Chiller

NESLAB Manual P/N 002143
Rev. 04/23/97

Installation, Operation, and Maintenance Manual

HX Series
Recirculating Chiller
TC-400 Controller

NESLAB Manual P/N U00546
Rev. 07/22/99

Installation, Operation, and Maintenance Manual



HX Series Recirculating Chiller
Installation, Operation, and Maintenance Manual

Table of Contents

PREFACE

Compliance 5
Unpacking 5
Warranty 5
After-sale Support 5

SECTION I
Safety

Warnings 6

SECTION II
General Information

Description 7
Specifications 8
Cooling Capacity 9
Pump Capacity 10

SECTION III
Installation

Site (Air-cooled Units) 12
Site (Water-cooled Units) 14
Electrical Requirements 16
Plumbing Requirements 17
Fluids 19
Water Quality Standards and Recommendations 20
Filling Requirements 21

SECTION IV
Temperature Controller

Controller Keypad 22
Status Indicators 23
Changing a Value 25
Controller Displays 25

SECTION V
Operation

Flow Control 29
Start Up 29
Pressure Gauge 30
INTERFACE Connector 31

SECTION VI
Optional Features

Automatic Refill Device 32
Heater Package 33
SENSOR Connector 35
COMM Connector 35
Remote Box 36
External Pressure Regulator 37
Nitrogen Purge 38
Particulate Filters 38

SECTION VII
Maintenance

Service Contracts 39
Condenser Cleaning 39
Hoses 39
Algae 39

SECTION VIII
Service

Configuration 40
Reservoir Cleaning 41
Pump Strainer 42
Pump Motor Lubrication 43
Phase Rotation 43
High Pressure Cutout 44
Pump Motor Overload Protector (3Ø Units) 44
Pressure Relief Valve 45
Suction Discharge Pressure and Speed Check 45

SECTION IX
Troubleshooting

Displaying Software Version 46
Checklist 46
Service Assistance 47

SECTION X
Diagrams

Refrigeration Flow (HX-75 and HX-150) 48
Refrigeration Flow (HX-300 through HX-750) 48
Pump Flow (CP Pumps) 49
Pump Flow (PD and TU Pumps) 49
Dimensions 50

APPENDIX A

Remote Probe Calibration

APPENDIX B

Programming Software

APPENDIX C

Serial Communications Protocol

WARRANTY

Quick Start Procedures Air-Cooled Models

Installation

Position the unit so the intake and discharge are not impeded. Inadequate ventilation will cause a reduction in cooling capacity and, in extreme cases, compressor failure.

Avoid excessively dusty areas and institute a periodic cleaning schedule. For proper operation, the unit needs to pull substantial amounts of air through a condenser. A build up of dust or debris on the fins of the condenser will lead to a loss of cooling capacity.

The unit will retain its full rated capacity in ambient temperatures up to approximately +24°C.

Ensure the voltage of the power source meets the specified voltage, ±10%.

The plumbing connections are located on the right side of the unit and are labelled SUPPLY and RETURN. These connections are ¾ inch FPT. Remove the plastic protective plugs from both plumbing connections. Connect the SUPPLY fitting to the inlet of your application. Connect the RETURN fitting to the outlet of your application.

To fill the reservoir open the access panel on the left rear corner of the case top and remove the reservoir cover by unscrewing the thumbscrews. Fill the reservoir to within one inch of the top. If the fluid capacity of your application and recirculation lines is significant, have extra fluid on hand.

NESLAB recommends using distilled/deionized water with a 0.05 to 0.1 megohm-cm reading. If you do not have access to distilled/deionized water we recommend using filtered tap water.

Operation

Before starting the unit, double-check all electrical and plumbing connections. Make sure the circulating system has been filled with cooling fluid.

On models HX-300 through HX-750, the unit must be connected to the power source for at least 12 hours to allow the compressor oil to heat and separated from the refrigerant.

To start the unit first connect it to main power. On units equipped with a circuit breaker, place it to the on position. The MAIN POWER LED will illuminate. Place the ON/OFF switch to the ON position. The COOL and HEAT LEDs on the front panel indicate the status of the refrigeration system. COOL is on when the unit is removing heat from the cooling fluid, HEAT is on when heat is being added to the fluid reservoir. As the operating temperature approaches the setpoint, the LEDs cycle.

When the unit is shut off, wait five minutes before restarting to allow time for the refrigeration pressures to equalize. If the pressures are not allowed to equalize, the compressor will short-cycle and no cooling will occur.

Temperature Adjustment

To display the temperature setpoint, while displaying the reservoir temperature press the NEXT key. To adjust the temperature setpoint use the YES/NO keys as described in this manual.

Flow Control

The RECIRCULATING FLOW CONTROL handle controls the flow rate to your application. In the full vertical position you receive full flow, the full horizontal position is no flow.

Periodic Maintenance

Periodically inspect the reservoir fluid. If cleaning is necessary, flush the reservoir with a cleaning fluid compatible with the circulating system and the cooling fluid.

The cooling fluid should be replaced periodically. When operating at low temperatures, the concentration of water in the cooling fluid will increase over time, leading to a loss of cooling capacity.

Periodic vacuuming of the condenser fins is necessary. The frequency of cleaning depends on the operating environment. We recommend making a monthly visual inspection of the condenser after initial installation. After several months, the cleaning frequency will be established.

Units with PD and TU pumps have a strainer. If debris is in the system, the strainer will prevent the material from being drawn into the pump and damaging the pump vanes.

After initial installation, the strainer may become clogged. The strainer must be cleaned after the first week of installation. After this first cleaning, a monthly visual ins-pection is recommended. After several months, the frequency of cleaning will be established.

Before cleaning the strainer, disconnect the power cord from the power source and drain the reservoir.

Quick Start Procedures Water-Cooled Models

Installation

Position the unit in a clean environment with easy access to facility cooling water and a drain. The facility water requirements must meet those specified in the instruction or unit performance will be reduced.

Ensure the voltage of the power source meets the specified voltage, ±10%.

The plumbing connections are located on the rear and right side of the unit and are labelled TAP WATER, DRAIN, SUPPLY and RETURN. Remove the plastic protective plugs from all the plumbing connections. Connect the TAP WATER fitting to the facility cooling water and the DRAIN fitting to a drain. Connect the SUPPLY fitting to the inlet of your application and the RETURN fitting to the outlet of your application.

To fill the reservoir open the access panel on the left rear corner of the case top and remove the reservoir cover by unscrewing the thumbscrews. Fill the reservoir to within one inch of the top. If the fluid capacity of your application and recirculation lines is significant, have extra fluid on hand.

NESLAB recommends using distilled/deionized water with a 0.05 to 0.1 megohm-cm reading. If you do not have access to distilled/deionized water we recommend using filtered tap water.

Operation

Before starting the unit, double-check all electrical and plumbing connections. Make sure the circulating system has been filled with cooling fluid.

Ensure the facility water is turned on.

On models HX-300 through HX-750, the unit must be connected to the power source for at least 12 hours to allow the compressor oil to heat and separated from the refrigerant.

To start the unit first connect it to main power. On units equipped with a circuit breaker, place it to the on position. The MAIN POWER LED will illuminate. Place the ON/OFF switch to the ON position. The COOL and HEAT LEDs on the front panel indicate the status of the refrigeration system. COOL is on when the unit is removing heat from the cooling fluid, HEAT is on when heat is being added to the fluid reservoir. As the operating temperature approaches the setpoint, the LEDs cycle.

When the unit is shut off, wait five minutes before restarting to allow time for the refrigeration pressures to equalize. If the pressures are not allowed to equalize, the compressor will short-cycle and no cooling will occur.

Temperature Adjustment

To display the temperature setpoint, while displaying the reservoir temperture press the NEXT key. To adjust the temperature setpoint use the YES/NO keys as described in this manual.

Flow Control

The RECIRCULATING FLOW CONTROL handle controls the flow rate to your application. In the full vertical position you receive full flow, the full horizontal position is no flow.

Periodic Maintenance

Periodically inspect the reservoir fluid. If cleaning is necessary, flush the reservoir with a cleaning fluid compatible with the circulating system and the cooling fluid.

The cooling fluid should be replaced periodically. When operating at low temperatures, the concentration of water in the cooling fluid will increase over time, leading to a loss of cooling capacity.

Units with PD and TU pumps have a strainer. If debris is in the system, the strainer will prevent the material from being drawn into the pump and damaging the pump vanes.

After initial installation, the strainer may become clogged. The strainer must be cleaned after the first week of installation. After this first cleaning, a monthly visual inspection is recommended. After several months, the frequency of cleaning will be established.

Before cleaning the strainer, disconnect the power cord from the power source and drain the reservoir.

Preface

Compliance

Products tested and found to be in compliance with the requirements defined in the EMC standards defined by 89/336/EEC as well as Low Voltage Directive (LVD) 73/23/EEC can be identified by the CE label on the rear of the unit. The testing has demonstrated compliance with the following directives:

LVD, 73/23/EEC	Complies with UL 3101-1:93
EMC, 89/336/EEC	EN 55011, Class A Verification EN 50082-1:1992 IEC 1000-4-2:1995 IEC 1000-4-3:1994 IEC 1000-4-4:1995

For any additional information refer to the Letter of Compliance that shipped with the unit (Declaration of Conformity).

Unpacking

Retain all cartons and packing material until the unit is operated and found to be in good condition.

On units with a remote control box, the box is packed in a separate carton. Be sure to locate this separate carton; do not dispose of it by mistake.

If the unit shows external or internal damage, or does not operate properly, contact the transportation company and file a damage claim. Under ICC regulations, this is your responsibility.

Warranty

The unit has a warranty against defective parts and workmanship for one full year from date of shipment. Refer to the last page of this manual for complete warranty details.

After-sale Support

NESLAB is committed to customer service both during and after the sale. If you have questions concerning the operation of your unit or the information in this manual, contact our Sales Department. If your unit fails to operate properly or if you have questions concerning spare parts or Service Contracts, contact our Service Department.

Before calling, please refer to the serial number label on the rear of the case top to obtain the following information (see Section II, Description for the serial number label location):

- BOM number _____

- Serial number _____

- Software version (see page 46) _____

Section I Safety

Warnings

Make sure you read and understand all instructions and safety precautions listed in this manual before installing or operating your unit. If you have any questions concerning the operation of your unit or the information in this manual, contact our Sales Department for assistance (see Preface, After-sale Support).

Performance of installation, operation, or maintenance procedures other than those described in this manual may result in a hazardous situation and may void the manufacturer's warranty.

Transport the unit with care. Sudden jolts or drops can damage the refrigeration lines.

Do not attempt to defeat any of the interlock switches or safety features built into the unit.

Observe all warning labels.

Never remove warning label.

Never operate damaged or leaking equipment.

Never operate the unit without cooling fluid in the fluid reservoir.

Make sure the unit is off before connecting or disconnecting the power cord or other cables.

Always turn off the unit and, if applicable, disconnect the power cord from the power source before performing any service or maintenance procedures, or before moving the unit.

Always empty the fluid reservoir before moving the unit.

Never operate equipment with damaged power cords.

Refer service and repairs to a qualified NESLAB technician.



In addition to the safety warnings listed above, warnings are posted throughout the manual. These warnings are designated by an exclamation mark inside an equilateral triangle with text highlighted in bold. Read and follow these important instructions. Failure to observe these instructions can result in permanent damage to the unit, significant property damage, or personal injury or death.

Section II General Information

Description

The HX Series Recirculating Chiller is designed to provide a continuous flow of cooling fluid at a constant temperature and volume.

The unit consists of an air-cooled or water-cooled refrigeration system, a fluid reservoir, a fluid recirculation pump, and a temperature controller. Optional remote temperature controllers and remote probes are also available.

HX units are available with a large number of options. This manual explains how to install, operate, and maintain a “standard” HX unit. This manual also explains some of the available options. Supplemental manuals are supplied with units equipped with options not covered in this manual.

Throughout the manual, you will be asked to consult the unit’s serial number label, or the pump identification label, or both, for specific information. Both labels are located on the rear of the case top.

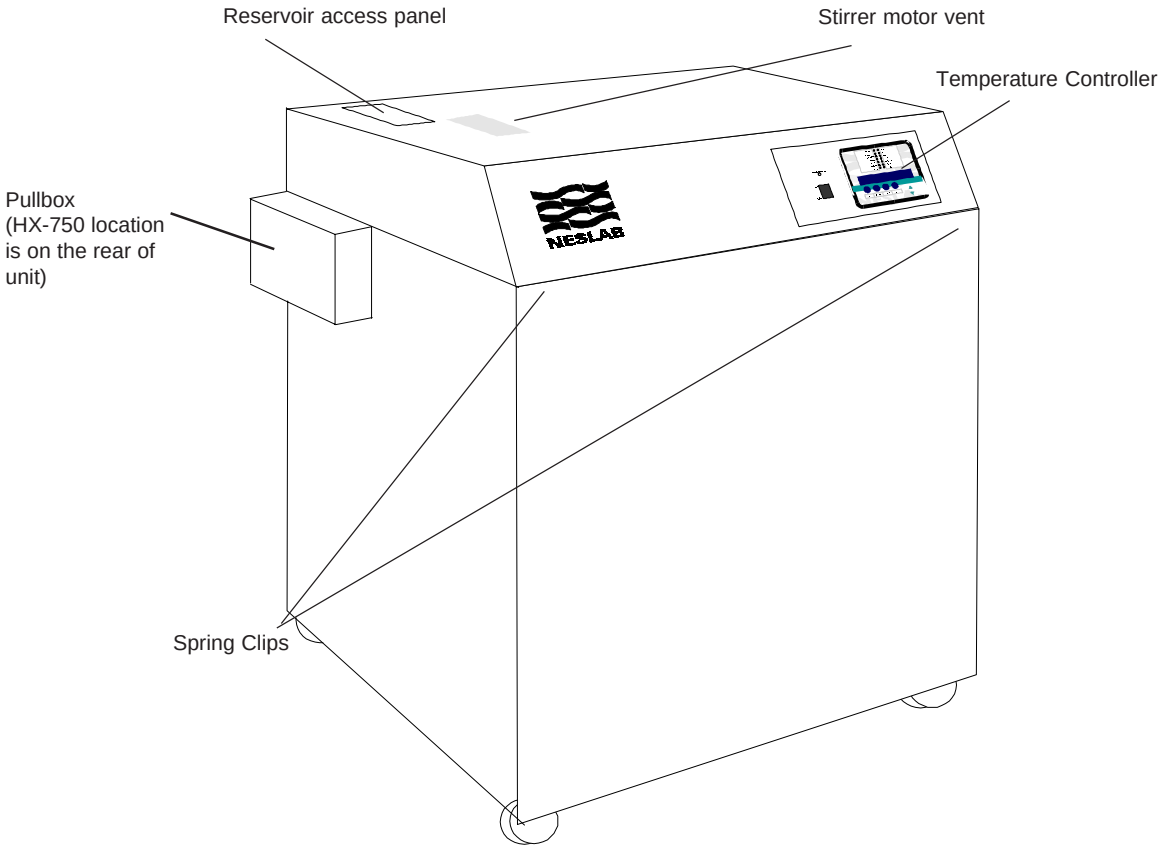

Specifications

	HX-75	HX-150	HX-300
Temperature Range[1,2]	+5°C to +35°C		
Temperature Stability	±0.1°C		
Unit Dimensions (H x W x D)			
Inches	36 ¾ x 23 ¼ x 18 ¾	40 5/8 x 26 ¼ x 21 1/8	46 7/8 x 33 ¾ x 25 ¼
Centimeters	93.3 x 59.0 x 47.6	103.2 x 66.7 x 53.6	119.1 x 85.7 x 64.1
Reservoir Volume			
Gallons	5.0	8.0	15.0
Liters	18.9	30.3	56.8
Shipping Weight			
Pounds	261	320	477
Kilograms	118	145	216

	HX-500	HX-750
Temperature Range	+5°C to +35°C	
Temperature Stability	±0.1°C	
Unit Dimensions[3] (H x W x D)		
Inches	51 5/8 x 46 x 28 ¾	64 ¾ x 46 x 29
Centimeters	131.1 x 116.8 x 73.0	163.2 x 116.8 x 73.7
Reservoir Volume		
Gallons	28.0	40.0
Liters	106.0	151.4
Shipping Weight		
Pounds	746	971
Kilograms	338	440

1. For safety reasons, the unit is designed to shut down if the reservoir fluid temperature exceeds 7°C of either temperature limit.
2. Modified temperature ranges from -15°C to +90°C are available.
3. Model HX-750 with a water-cooled refrigeration system has the same dimensions as the HX-500. For additional dimensions see page 50.

Cooling Capacity

Cooling capacity will vary depending on fluid temperature, ambient temperature, and cooling fluid.

Cooling capacities were obtained under the following conditions:

1. *air-cooled unit operating at +20°C (+68°F) ambient temperature.*
2. *cooling fluid with specific heat of 1.0 was used for fluid temperatures from +5°C to +35°C.*

HX-75 & HX-150

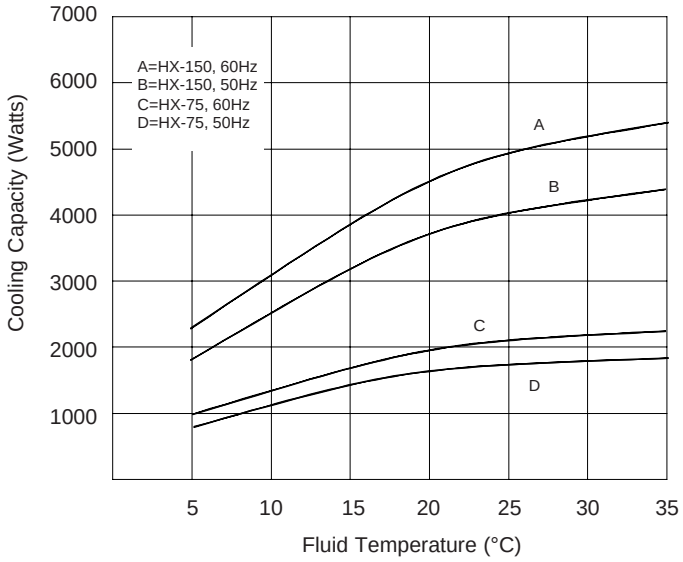

HX-300 & HX-500

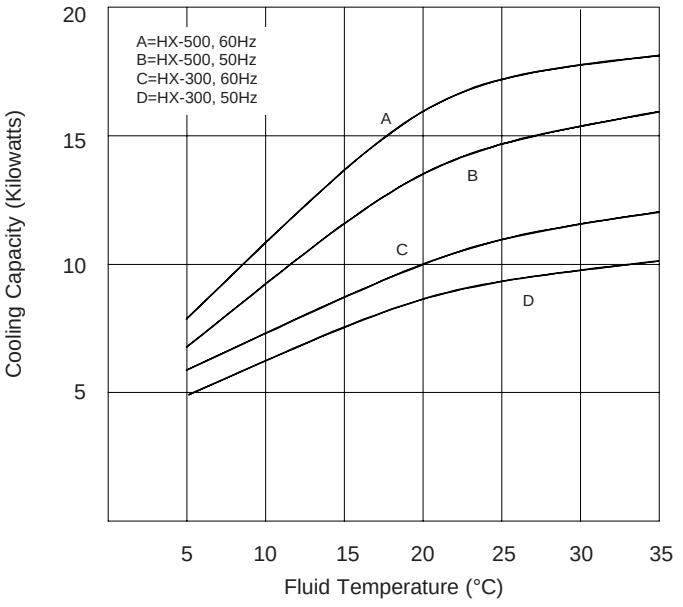

HX-750

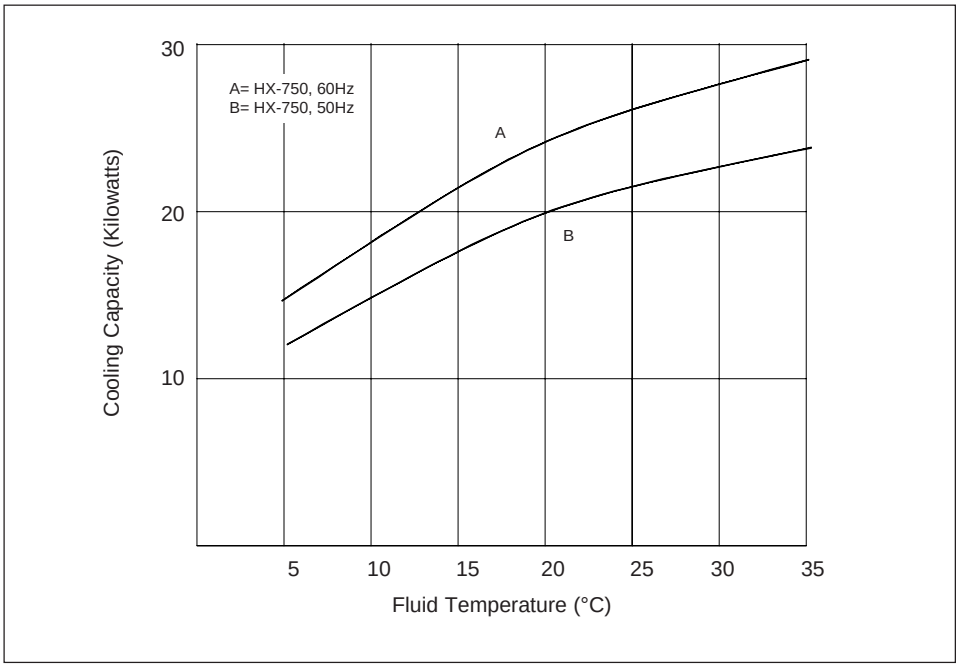

Pump Capacity

HX units are available with one of three standard pump types: positive displacement (PD), centrifugal (CP), and turbine (TU). Refer to the pump identification label on the rear of the case top to identify the specific pump in your unit.

PD2 & TU1

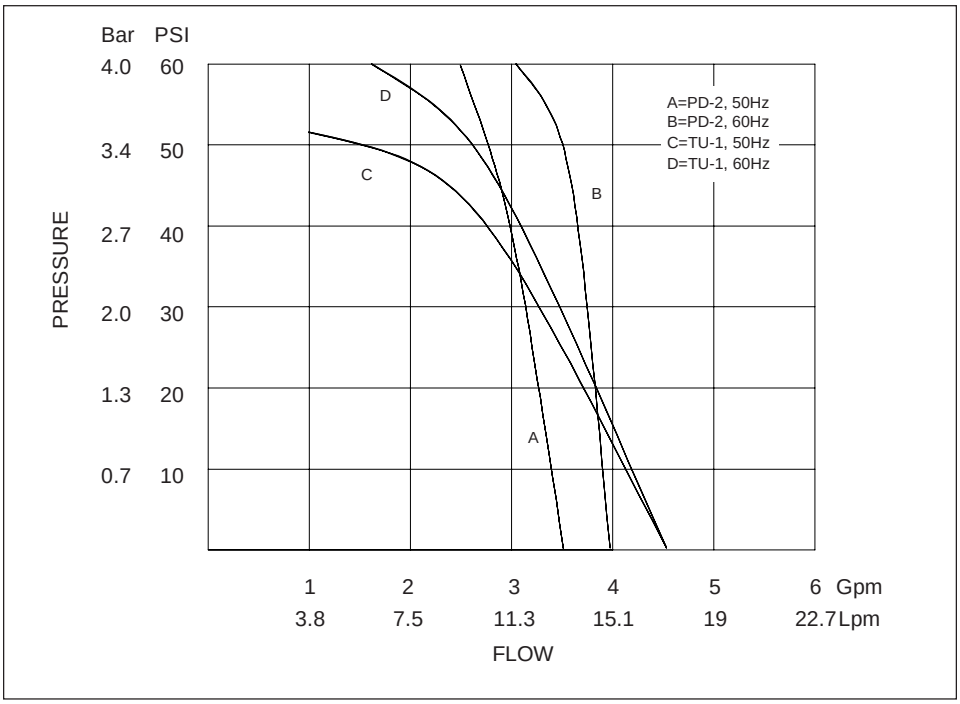

CP

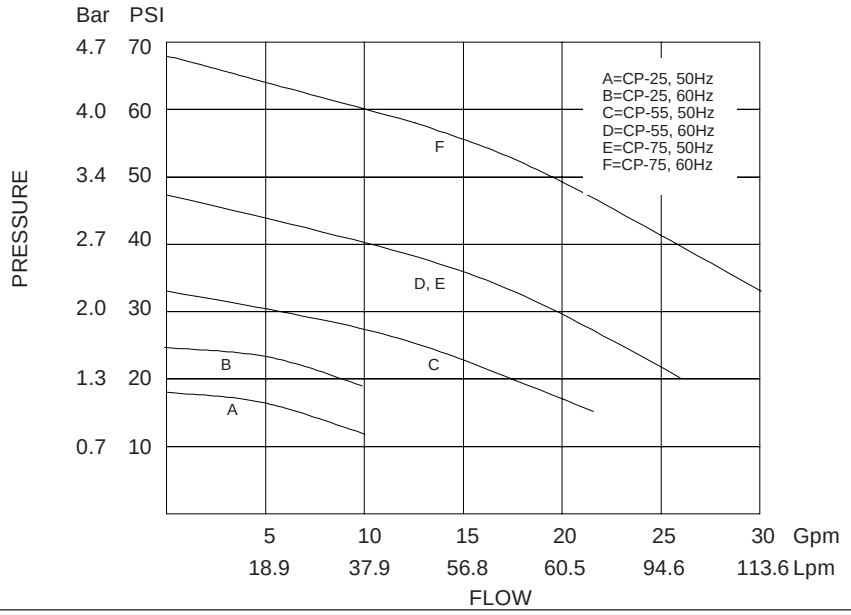

TU-3, 5 & 6

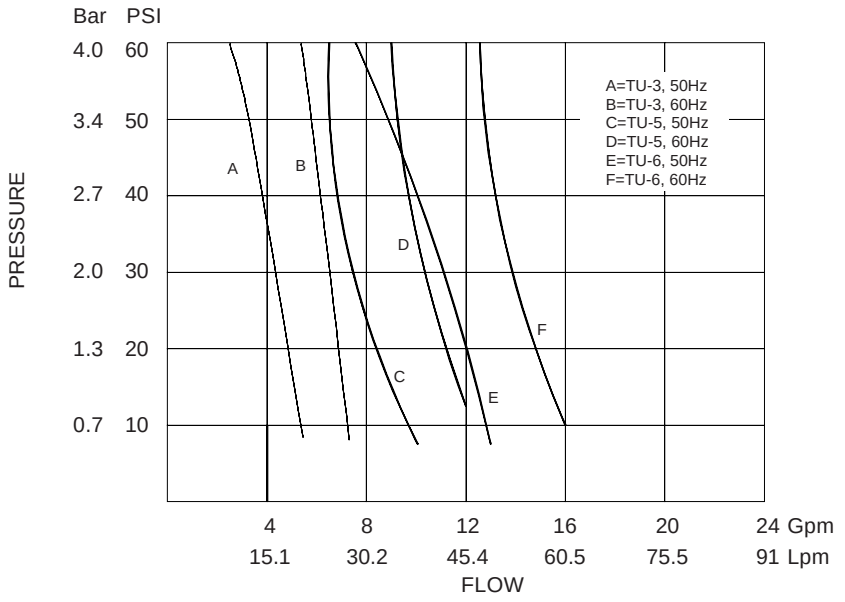

TU-7, 8 & 9

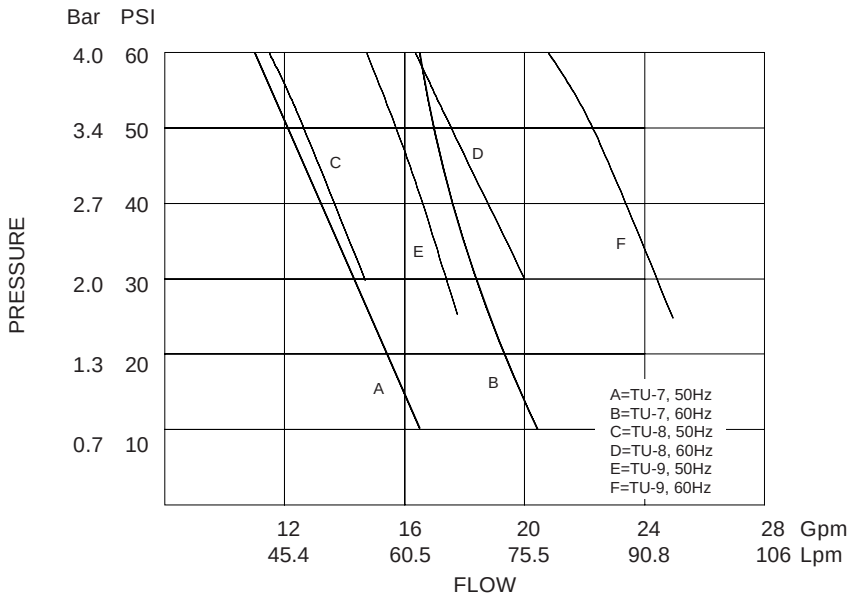

Section III Installation

Site (Air-cooled Units)

The unit should be located in a laboratory or clean industrial environment where ambient temperatures are inside the range of +55°F to +95°F (+13°C to +35°C).

The unit will retain its full rated capacity in ambient temperatures to approximately +75°F (+24°C). Above +75°F, reduce the cooling capacity 1% for every 1°F above +75°F, to a maximum ambient temperature of +95°F. In degrees Celsius, reduce the cooling capacity 1% for every 0.5°C above +24°C, to a maximum ambient temperature of +35°C.



Never place the unit in a location where excessive heat, moisture, or corrosive materials are present.

The unit has an air-cooled refrigeration system. It must be positioned so the air intake and discharge are not impeded.

On models HX-75 and HX-150, air is drawn through the left side of the unit and discharged through the right and rear. A minimum clearance of 2 feet (0.6 meter) on these three sides is necessary for adequate ventilation.

On models HX-300 through HX-750, air is drawn through the front of the unit and discharged through the side and rear panels. A minimum of 5 feet (1.5 meters) on all four sides of the unit is necessary for ventilation.

On models with a three-phase condenser fan motor, it is possible to connect the main power and have the motor turn in the wrong direction resulting in incorrect airflow over the condenser. Proper airflow is achieved by exchanging any two main power connectors so air is drawn into the fan. See page 35.

In some applications where space is at a premium, the minimum ventilation clearance can be compromised. However, consult our Sales Department before positioning the unit in a location with less minimum clearance than listed above. Inadequate ventilation will cause a reduction in cooling capacity and, in extreme cases, compressor failure.



Avoid excessively dusty areas and institute a periodic cleaning schedule (see Section VII, Condenser Cleaning). If the compressor is allowed to overheat the unit's High Pressure Cutout (HPC) will cycle the unit on and off until cleaning is done and proper airflow is restored. This cycling will eventually damage the unit's compressor.

On models HX-150 through HX-750 a stirrer motor is located under the case top. (Models HX-500 and HX-750 have two stirrer motors.) Heat generated by the stirrer motor is discharged through vents in the case top. Do not block the vents. A minimum clearance of 2 inches (5 centimeters) is necessary for adequate ventilation.

NOTE: HX-75s and units with plate heat exchangers do not have stirrer motors.

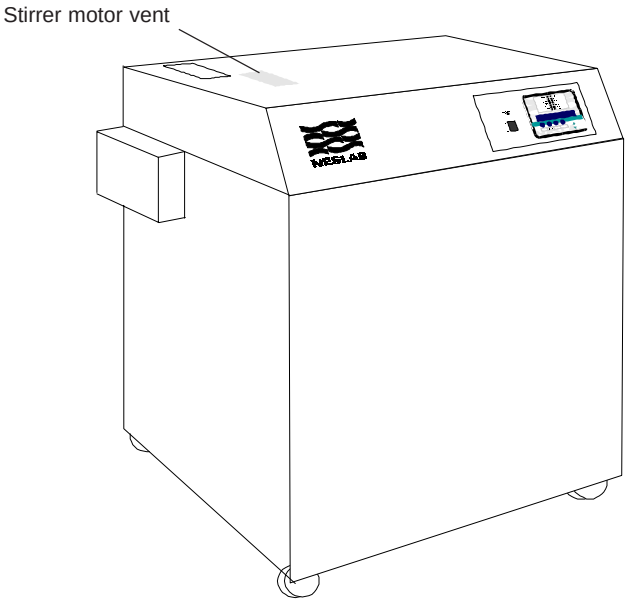

Refer to the table below to determine the approximate amount of air intake required for the unit to retain its full rated capacity. If the air intake does not meet these standards, cooling capacity will be reduced.

	HX-75	HX-150	HX-300
Air Intake			
Cubic feet per minute	600	1050	1900
Liters per minute	17000	29730	53800

	HX-500	HX-750
Air Intake		
Cubic feet per minute	5000	5600
Liters per minute	141750	158800

Site (Water-cooled units)

The unit should be located in a laboratory or clean industrial environment with easy access to a facility cooling water supply and a drain.

All units are equipped with castors for easy movement. This allows the unit to be placed in a small area, as long as there is ample space for the unit to be moved for access on all four sides. A minimum access clearance of 3 feet (1 meter) on two adjacent sides is recommended.

The facility cooling water supply must meet or exceed the requirements listed in the table shown on the next page for the unit to operate at its full rated capacity. If the facility cooling water does not meet these standards, the cooling capacity will be reduced.

As the temperature of the cooling water supply increases, the required flow rate and pressure of the cooling water supply increases.

For example, with a model HX-150, if the temperature of the cooling water supply is +65°F, the flow rate must be at least 1.5 gallons per minute, with a pressure differential of at least 3.5 PSI. However, if the temperature of the cooling water supply is +85°F, the flow rate must be at least 4.0 gallons per minute, with a pressure differential of at least 10 PSI.

If the unit is being used with a building water supply, the back pressure of the drain must be less than the supply pressure.

A water-regulating valve, located in the TAP WATER line, regulates the flow rate of the cooling water supply as it enters the unit. The valve regulates the flow rate based on the heat load. Flow through the unit stops automatically when the unit is shut off.

On models HX-150 through HX-750 a stirrer motor is located under the case top. (Models HX-500 and HX-750 have two stirrer motors.) Heat generated by the stirrer motor is discharged through vents in the case top. Do not block the vents. A minimum clearance of 2 inches (5 centimeters) is necessary for adequate ventilation. See illustration on page 13.

NOTE: HX-75s and units with plate heat exchangers do not have stirrer motors.

	Temperature of cooling water supply			
	+55°F (+13°C)	**+65°F (+18°C)**	**+75°F (+24°C)**	**+85°F (+29°C)**
HX-75				
Flow Rate				
Gallons per minute	0.75*	1.0	1.5	3.0
Liters per minute	2.8*	3.7	5.7	11.4
Pressure Drop				
PSI	1.5*	2.0	3.5	8.0
Bar	0.10*	0.13	0.24	0.55
HX-150				
Flow Rate				
Gallons per minute	1.0*	1.5	2.0	3.5
Liters per minute	3.8*	5.7	7.6	13.2
Pressure Drop				
PSI	2.0*	3.5	5.0	10.0
Bar	0.13*	0.24	0.34	0.69
HX-300				
Flow Rate				
Gallons per minute	2.5*	4.0	6.5	11.0
Liters per minute	9.5*	15.1	24.6	41.6
Pressure Drop				
PSI	6.0*	8.0	13.5	25.0
Bar	0.41*	0.55	0.93	1.72
HX-500				
Flow Rate				
Gallons per minute	3.5	5.0	8.0	16.0
Liters per minute	13.2	18.9	30.3	60.6
Pressure Drop				
PSI	13.0	17.0	23.0	57.0
Bar	0.89	1.17	1.58	3.93
HX-750				
Flow Rate				
Gallons per minute	6.0	8.0	12.5	16.6
Liters per minute	22.7	30.3	47.3	62.8
Pressure Drop				
PSI	14.0	20.0	28.5	40.0
Bar	0.96	1.38	1.96	2.76

*Estimated Value

Electrical Requirements

The unit construction provides extra protection against the risk of electric shock by grounding appropriate metal parts. The extra protection may not function unless the power cord is connected to a properly grounded outlet. It is your responsibility to assure a proper ground connection is provided.

Refer to the table below to determine the unit's electrical requirements. Verify the requirements by reviewing the ratings listed on the serial number label on the rear of the case top.

	HX-75 & HX-150		HX-300		
Volts	208-230	220-240	208-230	200-220	380-420
Hertz	60	50	60	50	50
Phase	1	1	3	3	3
Plug	NEMA L6-30P or L6-20P		NEMA L15-30P or L16-20P		

	HX-500 & HX-750	
Volts	208-230	380-420
Hertz	60	50
Phase	3	3

Make sure the voltage of the power source agrees with the unit's voltage and frequency rating. The unit is designed to tolerate deviations of ±10% from the rated line voltage.

Models HX-75 through HX-300 rated 24 Amps or less have an 8 foot (2.4 meter) power cord installed on the unit at the time of shipment.

HX-500s and HX-750s and some units equipped with heaters do not have a power cable. Installation of the cable is your responsibility. Wire the unit in conformance to local, state and federal electrical codes. Double check all wiring to make sure it is properly connected and protected from the elements.

For personal safety and equipment reliability, only a qualified technician should perform the following procedure.

To access the connections open the pullbox.

- Insert your cable through the conduit.
- Locate 3TB and 4TB and connect your cable. See the illustration on page 34.
- Close the pullbox.

Plumbing Requirements

Air-cooled and water-cooled units

Before installing the unit to an instrument that previously used tap water as a cooling fluid, flush the instrument several times to remove any rust or scale that has built up. Consult the manufacturer of the instrument for a cleaning fluid recommendation.

The plumbing fittings used to connect the HX to the instrument being cooled are located on the right side of the unit (labelled SUPPLY and RETURN). These connections are ¾ inch NPT, unless otherwise specified.

Remove the protective plugs from the SUPPLY and RETURN connections. Connect the SUPPLY fitting to the inlet of your application. Connect the RETURN fitting to the outlet of your application.

The RESERVOIR DRAIN connection, located on the rear of the unit, is a ½ inch FPT fitting connected internally to the unit's fluid reservoir. This fitting is for draining the reservoir. The unit is shipped with a ½ inch MPT plug installed in this fitting. Remove the plug to drain the reservoir.

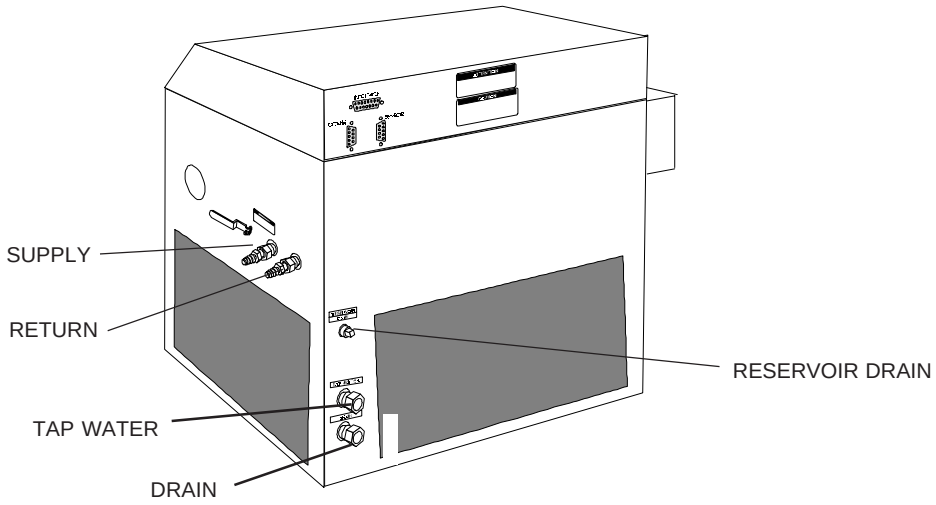

Two plumbing adapters (¾ inch MPT x 5/8 inch hose) are included with the unit. If the unit is being plumbed to the instrument being cooled using flexible tubing, install the adapters in the SUPPLY and RETURN plumbing ports. To prevent leaking, wrap the threads of the adapters with Teflon® sealing tape before installing them in the plumbing ports. The adapters will accept ½ or 5/8 inch ID flexible tubing.

Flexible tubing, if used, should be heavy wall or reinforced construction. All tubing should be rated to withstand 110 psi at the unit's highest possible operating temperature. Make sure all tubing connections are securely

clamped. Avoid running tubing near radiators, hot water pipes, etc. If substantial lengths of tubing are necessary, insulation may be required to prevent loss of cooling capacity.

Tubing and insulation are available from NESLAB. Contact our Sales Department for more information (see Preface, After-sale Support).

If the unit is "hard plumbed" to the instrument being cooled or to the cooling water supply, damage can occur if the unit is bumped or jolted from its site. Provisions should be made to prevent the unit from being moved after installation. Once the unit is plumbed, secure the locking castors on the unit's base. If the unit is located in a heavy traffic area where the possibility of collision is imminent, it may be necessary to secure the unit to the site using blocks or mounting brackets.

It is important to keep the distance between the unit and your application as short as possible, and to use the largest diameter tubing practical. Tubing should be straight and without bends. If diameter reductions must be made, they should be made at the inlet and outlet of your application, not at the HX.

If substantial lengths of connecting tubing are required, they should be pre-filled with cooling fluid before connecting them to the unit.

Water-cooled units

The plumbing connections used to connect the water-cooled condenser in the HX to the facility cooling water supply are located at the rear of the unit (labelled TAP WATER and DRAIN). On HX-75s through HX-300s, these fittings are ½ inch FPT. On HX-500s and HX-750s, these fittings are 1 inch FPT.

Remove the plastic protective plugs from the TAP WATER and DRAIN connections. Connect the TAP WATER fitting to the facility cooling water supply. Connect the DRAIN fitting to a drain.

Fluids



Never use flammable or corrosive fluids with this unit. Do not use automotive antifreeze. Commercial antifreeze contains silicates that can damage the pump seals. Use of automotive antifreeze will void the manufacturer's warranty.

NESLAB recommends using distilled/deionized water with a 0.05 to 0.1 megohm-cm reading.



Highly distilled/deionized water, above the 3 megohm-cm region, may become aggressive and is not recommended for use with units with wetted parts other than stainless steel. Distilled/deionized water in the 15 megohm-cm region is definitely aggressive and should not be used. Units operating in these regions should be closely monitored. See Water Quality Standards and Recommendations in this section.

If you do not have access to distilled/deionized water we recommend using filtered tap water. NESLAB cannot recommend any custom fluids, these fluids are too dependent on your particular application.



If your unit is equipped with a plate heat exchanger do not use 100% water as a recirculating fluid. Due to the physical nature of a plate heat exchanger, and its response to temperature changes, using 100% water may cause the plate heat exchanger to rupture.

Below +8°C, a non-freezing solution is required. A 50/50 mixture, by volume, of distilled/deionized water and laboratory grade ethylene glycol is suggested. The selected cooling fluid must have a viscosity of 50 centistokes or less.

For units with extended temperature ranges above +35°C, we recommend distilled/deionized water up to +80°C. Above +80°C, you are responsible for the fluid(s) used.

NOTE: When using the remote sensor for low-temperature operation the unit itself may, depending on your application and setup, have to maintain an even lower temperature. Should the unit's fluid reservoir temperature exceed the low-end temperature range by 7°C, the unit will shut down.

Water Quality Standards and Recommendations

	Permissible (PPM)	Desirable (PPM)
Microbiologicals		
(algae, bacteria, fungi)	0	0
Inorganic Chemicals		
Calcium	<40	0.6
Chloride	250	<25
Copper	1.3	1.0
Iron	0.3	<0.1
Lead	0.015	0
Magnesium	<12	0.1
Manganese	0.05	<0.03
Nitrates\Nitrites	10 as N	0
Potassium	<20	0.3
Silicate	25	<1.0
Sodium	<20	0.3
Sulfate	250	<50
Hardness	17	<0.05
Total Dissolved Solids	50	10
Other Parameters		
pH	6.5-8.5	7-8
Resistivity	0.01*	0.05-0.1*

* Megohm-Cm (Compensated to 25°C)

Unfavorably high total ionized solids (TIS) can accelerate the rate of galvanic corrosion. These contaminants can function as electrolytes which increase the potential for galvanic cell corrosion and lead to localized corrosion such as pitting which can be observed at the studs and on the outside surface of cooling coils. Eventually, the pitting will become so extensive that the coil will leak refrigerant into the water reservoir.

As an example, raw water in the United States averages 171 ppm (of NaCl). The recommended level for use in a water system is between 0.5 to 5.0 ppm (of NaCl).

Recommendation: Initially fill the tank with distilled/deionized water. Do not use untreated tap water, as the total ionized solids level may be too high.

Maintain this water quality at a resistivity of between 1 to 10 megohm-cm (compensated to 25°C) by using a purification system. Although the initial fill may be as high as 10 megohm-cm (compensated to 25°C), the desired level for long time usage is 1 to 3 megohm-cm (compensated to 25°C).

These two recommendations will reduce the electrolytic potential of the water and prevent or reduce the galvanic corrosion observed.

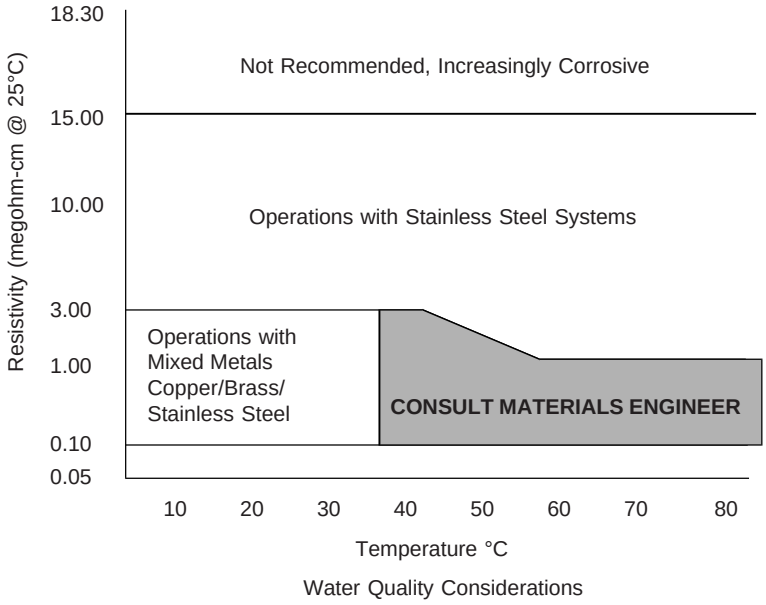

Water Quality Considerations

Filling Requirements

The reservoir access panel is located at the left rear corner of the case top. To open the access panel, slide the latch back (towards the rear of the unit) and lift.

The reservoir cover is located below the access panel. Loosen the thumbscrews and remove the reservoir cover.

Fill the fluid reservoir with cooling fluid to within 1 inch of the top.

The fluid capacity of the instrument being cooled and the recirculation lines may be significant. To prevent the lowering of the fluid level in the reservoir below the operating level, have extra cooling fluid on hand to keep the reservoir filled to within 1 inch of the top.

When the recirculating system is full, replace the reservoir cover and the access panel.

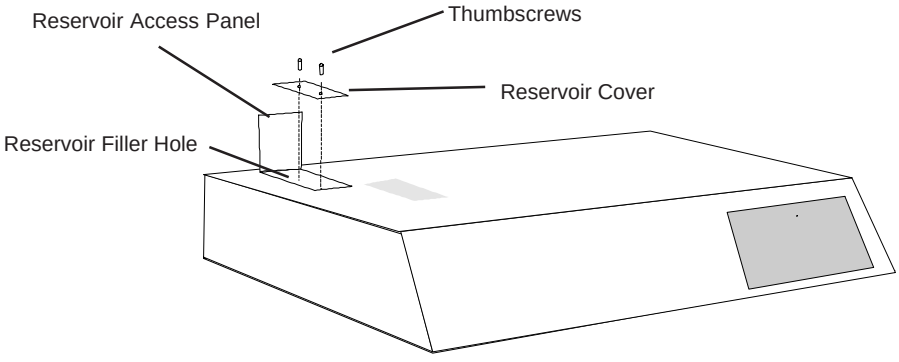

Section IV Temperature Controller

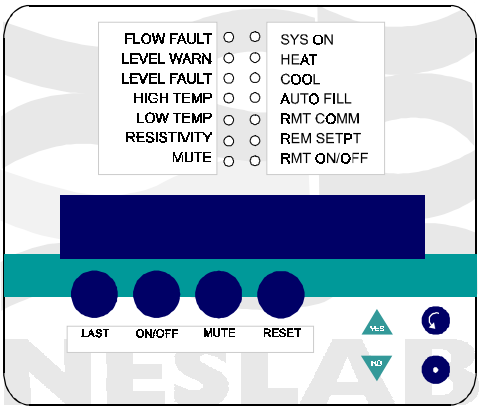

Controller Keypad

The front panel mounted unit/temperature controller allows the operator to start, control and monitor many features of the unit.

LAST
Scrolls backward through the menus.

ON/OFF
Starts/stops the unit.

MUTE
Toggles audible alarm silence function for the current alarm. When alarm is silenced, the MUTE LED lights.

RESET
Clears alarm indications after fault condition has been corrected. Alarm LEDs will remain lit after problem is eliminated to provide indication of problem cause for operator. RESET clears these indicators.

YES

Answers yes to Y/N questions, increments numerical values for setting numeric values.

NO

Answers no to Y/N questions, decrements numerical values for setting numeric values.

NEXT

Scrolls forward through the menus.

ENTER

Confirms entry of numeric values.

NOTE: If next is pressed while the value still flashes, the new value will not be accepted. The display will stop flashing and the original value will be displayed. In this case next can be used to abort data entry. The display will not sequence unless next is depressed again.

For large values, you can change the display by manipulating the individual digits. Press YES and NO at the same time, the most significant digit will flash. YES increments and the NO decrements the digit. Press enter to accept the digit and to move to the next most significant digit. Repeat until all digits are entered. Pressing next before all digits are entered will abort the procedure and return the display to the original value.

The controller will not allow you to enter a value above the maximum or below the minimum value, or any illegal value. If you try to enter an illegal value the display will revert to its original value when the last digit is entered.

Status Indicators

Units are configured in one of two ways. They are configured either to shut down in the case of a fault, Cutout Option (CUTOUT), or, for those customers willing to take the risk of damage to their unit in order to continue providing all available cooling to their application, a Switch Option (WARN). See Setup Loop on page 27. Contact our Service Department for more information.

If the Switch Option is chosen, LEVEL FAULT, HTC FAULT, SYS FAULT, and FLOW FAULT ***do not*** shut down the unit but they are serious conditions and require immediate attention. Once the cause of the fault is identified and corrected, push the controller's RESET button to clear the flashing SYS FAULT or the FLOW FAULT indication. Cycle the MASTER POWER ON OFF switch to clear the flashing HTC FAULT indication, see page 33.

Status indicators are provided to show the state of the various functions.

FLOW FAULT indicates the unit flow is below the low-flow setpoint. The unit will shut down in the Cutout Option, but will continue to operate in the Switch Option. **NOTE:** You can disable the low-flow monitor by setting the low-flow setpoint to 0, see page 27. The indicator flashes if the setpoint is set to 0.

LEVEL WARN indicator flashes if the reservoir level is below the top float switch mounted in the reservoir. The unit will continue to run.

LEVEL FAULT indicates the reservoir level is below the bottom float switch and is too low for safe operation. The unit will shut down.

HIGH TEMP indicates that the reservoir temperature is above the high temperature limit setpoint.

If the reservoir temperature is started above the high limit setpoint the unit will

continue to run and the HIGH TEMP indicator will continue to flash until the reservoir temperature is below the high limit setpoint. Should the reservoir temperature go above the high limit setpoint the unit continues to run in the Switch Option, but shuts down in the Cutout Option.

LOW TEMP indicates that the reservoir temperature is below the low temperature limit setpoint.

If a unit is started with the reservoir temperature below the temperature limit setpoint, the unit will run and the LOW TEMP status indicator will continue to flash until the reservoir temperature is above the low limit setpoint. Should the reservoir temperature subsequently go below the low limit setpoint the unit continues to run in the Switch Option, but shuts down in the Cutout Option.

RESISTIVITY (optional) indicator flashes if the measured resistivity is below the resistivity setpoint.

MUTE indicates the buzzer has been turned off.

SYS ON indicates unit is running.

HEAT indicates heat is being added to the reservoir system to maintain constant temperature. The indicator flashes when the optional heater is inside the proportional band.

COOL indicates the refrigeration system is removing heat from the reservoir system to maintain constant temperature.

As the fluid temperature approaches the temperature setpoint, the COOL indicator cycles on and off to indicate the duty cycle of the system. The unit can be in COOL or HEAT mode, but never both at the same time. A balance between COOL and HEAT controls the temperature.

AUTO FILL (optional) indicates the reservoir fluid level is below the top float switch and the auto refill device is activated, see page 32.

RMT COMM (optional) indicates the unit is configured to receive communication via an optional COMM connector located on the rear of the unit, see page 35.

REM SETPT indicates the temperature setpoint is being remotely controlled by the analog input (pin 15) on the INTERFACE on the rear of the unit, see page 31.

RMT ON/OFF indicates the unit is configured to receive a remote on/off input signal from pin 14 on the INTERFACE on the rear of the unit, see page 31.

Changing a Value

The **YES** key increments the value. The **NO** key decrements the value.

The display will flash as soon as either key is depressed, and will continue to flash until the **ENTER** key is pressed to accept the new value. The new value will not be used by the controller until the **ENTER** key is depressed and the display stops flashing.

If the **NEXT** key is pressed while the value is flashing, the new value will not be accepted. The display will stop flashing and the original value will be displayed. In this case the **NEXT** key can be used to abort data entry. The display will not sequence unless the **NEXT** key is depressed again.

For large values you can change the display by manipulating the individual digits. Press the **YES** key and the **NO** key at the same time. The most significant digit will start to flash. The **YES** key increments or the **NO** key decrements the digit. Press the **ENTER** key to accept the digit and to move to the next most significant digit. Repeat until all digits are entered. Pressing the **NEXT** key before all digits are entered will abort the procedure and return the display to the original value.

The controller will not allow you to enter a value below the minimum or above the maximum (typically +5°C and +35°C, these values change for units with extended temperature ranges). If you try to enter an illegal value outside the operating range, the display will revert to its original value.

Controller Displays

An alphanumeric display presents numeric readings of various operating conditions within the chiller. Display function is selected by pressing the appropriate keys to move through a menu of available information.

An Operator's Loop and a Setup Loop allow you to display and/or alter different parameters of the controller. The Setup Loop can be accessed from the Operator's Loop temperature display by pressing and holding the key combinations shown on Figure 1 on the next page.

When the controller is first powered up it goes through a short self-test and then enters the Operator's Loop, displaying the reservoir fluid temperature. Use the key combination shown in Figure 2 on the next page to scroll through the loop.

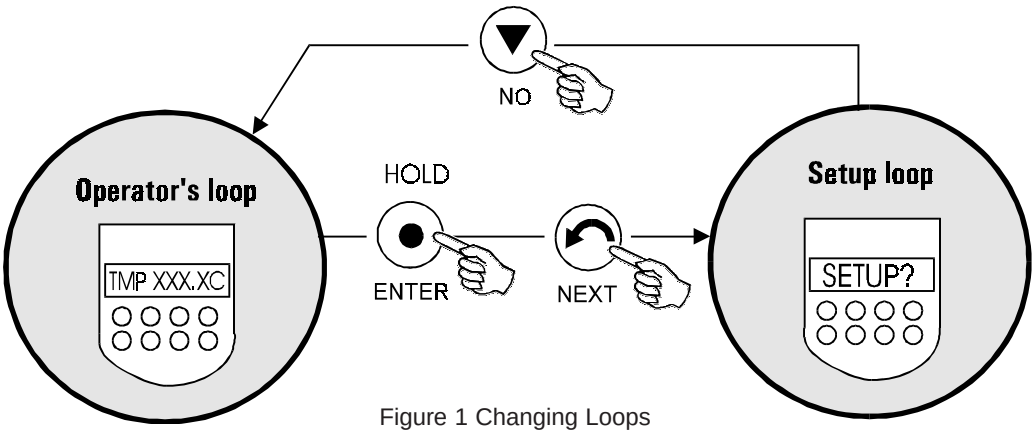

Figure 1 Changing Loops

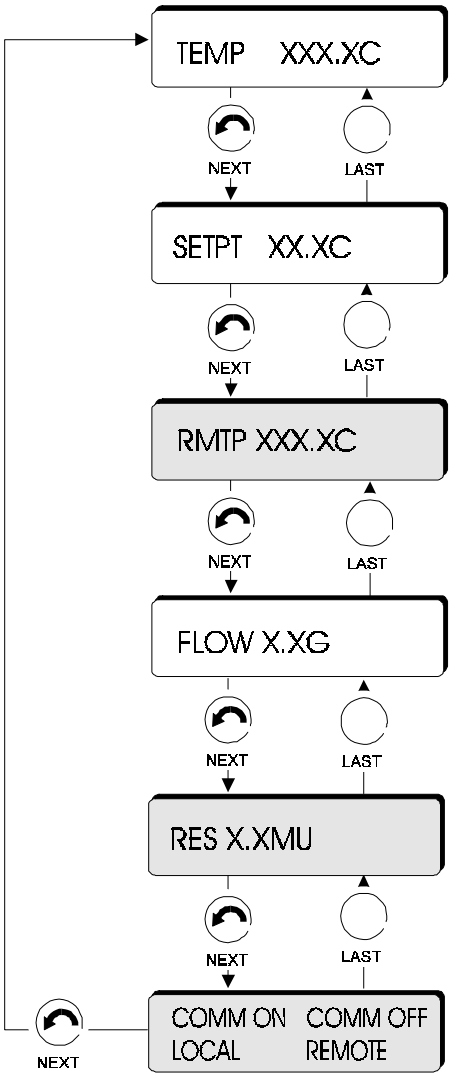

TEMPERATURE xxx.xC
This displays the temperature of coolant leaving the chiller.

SETPT xx.xC
This displays the setpoint for temperature control. The chiller's temperature controller causes the fluid temperature to equal this temperature. If needed, use the YES/NO keys to change the value then press ENTER to accept the new value.

RMTP xxx.xC*
For units using the optional remote probe, this feature displays the probe's sensed temperature. The probe's temperature control cannot exceed the unit's operational temperature range ±7°C or the unit will shut down. Ensure the probe is connected to the unit . See SENSOR on page 35.

FLOW x.xG
This displays the flow rate at the RETURN port in gallons or liters per minute.

RES x.xM*
This displays the uncompensated fluid resistivity.

COMM ON COMM OFF LOCAL REMOTE*
This displays one of the four possible communication configurations created in the Setup Loop. See pages 27 - 28.

* These displays are optional. They show only if the unit is factory configured.

Figure 2 Operator's Loop

Setup Loop

The Setup Loop allows the operator to change limits; to configure how the unit will react to faults (CUTOUT/WARN); to display the flow rate in GPM or LPM; and to include or exclude the optional remote probe display. It is also used to include or exclude the optional beeper; to change the temperature controller's tuning constants; to utilize the optional remote box; and to select optional external communication. Optional displays are highlighted.

NOTE: If the unit is configured for the remote operation option, the temperature limits are for the remote probe. For safety reasons, if the unit's fluid reservoir temperature exceeds 7°C of either end of the unit's temperature range, **the unit will shut down.**

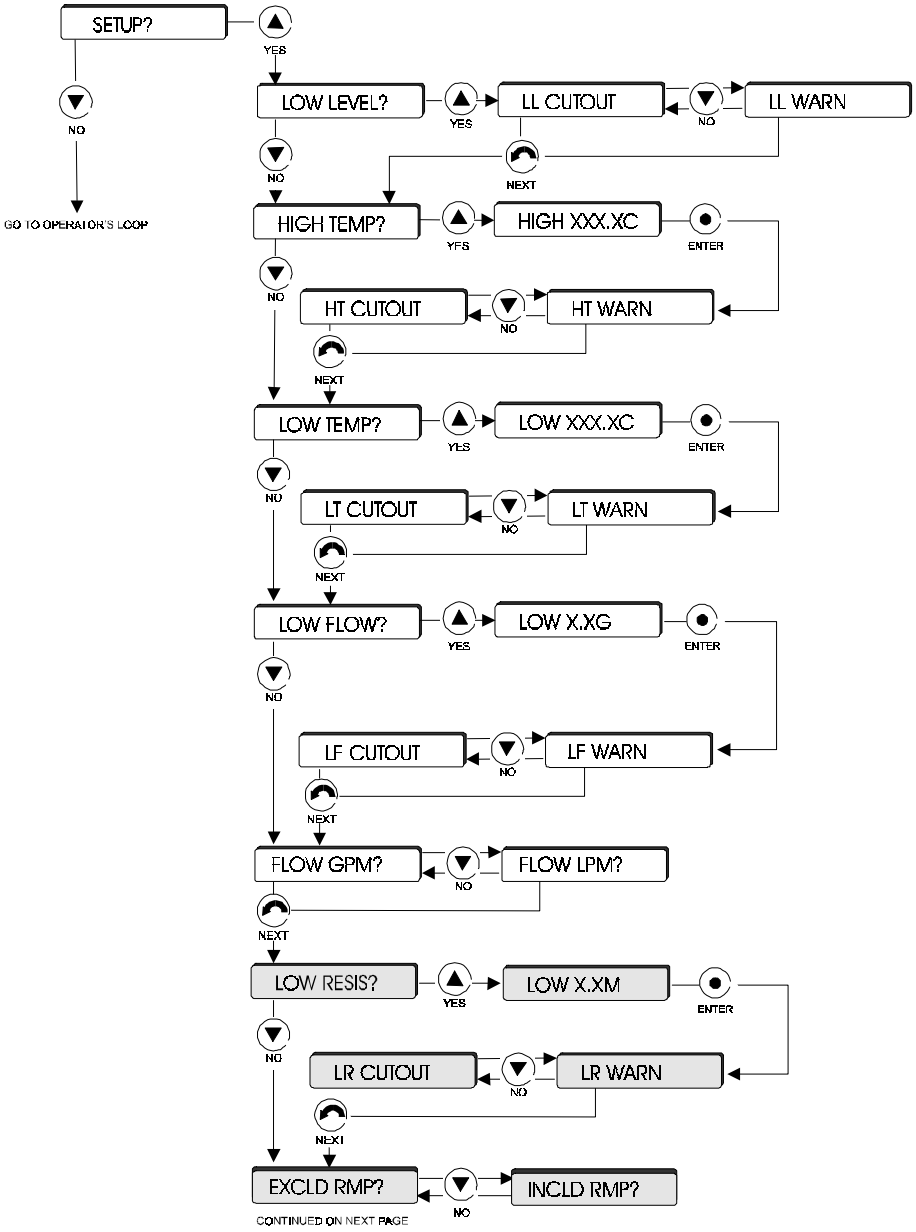

Figure 3 Setup Loop (1 of 2)

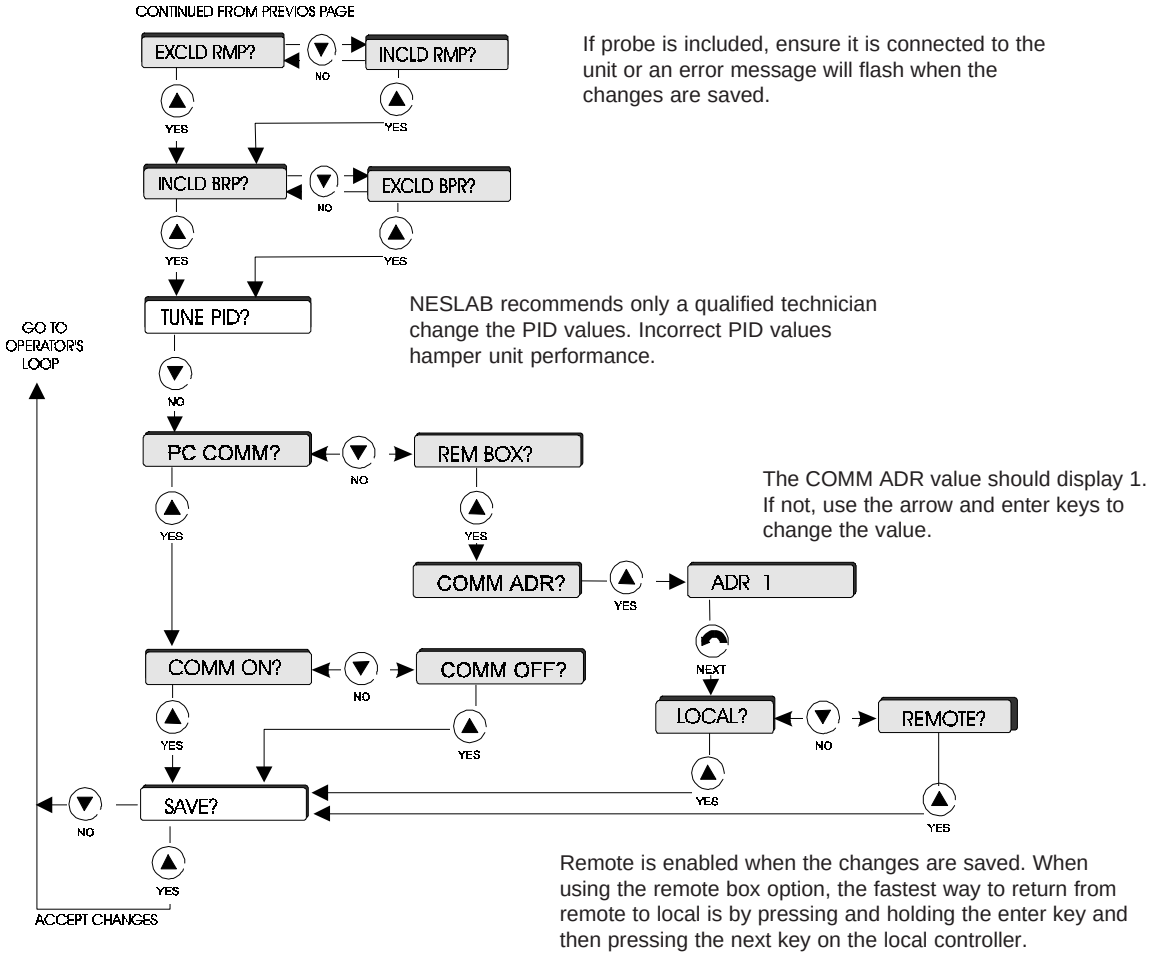

Figure 3 Setup Loop (2 of 2)

NOTE: Should you desire to return to the temperature display and abort *all* changes, keep pressing next until the display reads **SAVE?** Press **NO.**

Section V Operation

Flow Control

The RECIRCULATING FLOW CONTROL handle, located on the right-hand side of your unit, is connected to a valve that controls the flow rate of the cooling fluid to your application.

When the handle is in the full vertical position, the valve is open and all possible cooling fluid is supplied to your application. When the handle is in the full horizontal position, the valve is closed and no cooling fluid is supplied to your application. When the handle is between these two positions, the flow rate of the cooling fluid is between full flow and no flow. Use a flow meter on the SUPPLY line to adjust the desired flow rate.

The flow control valve must be opened slightly to allow fluid to circulate through the flow switch that monitors the flow rate. For small pumps, a flow rate of more than 0.3 gpm (1.0 lpm) is necessary. For large pumps, a 1.0 gpm (3.8 lpm) is needed. Pump flow for normal operation is pump dependent and is factory preset

Never “crank” the valve wide open from the closed or slightly open position.

Start Up

On water-cooled units, ensure the facility water is on and make sure the cooling water supply is connected to the TAP WATER connection, not the DRAIN connection.

Apply power to the unit. For CE Mark units, place the circuit breaker on the bonnet to the on position. The MAINPOWER indicator will illuminate.

Models HX-300 through HX-750 are equipped with a compressor crankcase heater. The crankcase heater warms the oil in the compressor and prevents refrigerant from mixing with the oil. Before start up, connect the unit to its power source for at least 12 hours. This allows time for the oil to heat and separate from the refrigerant.

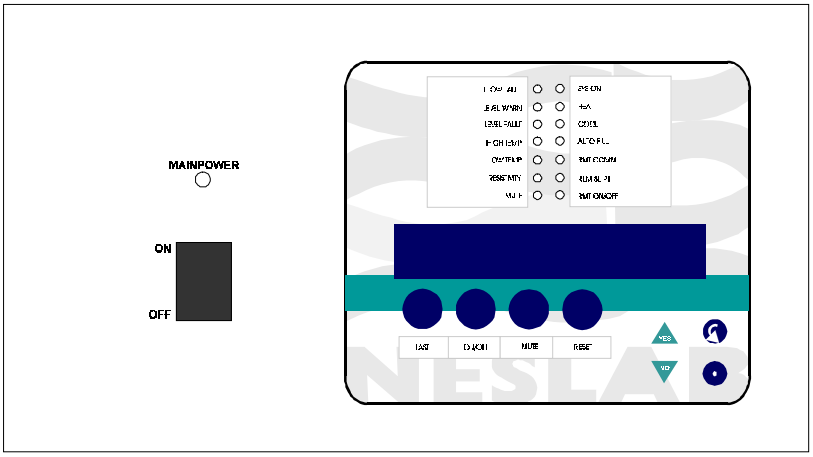

Place the MAIN POWER ON OFF switch ON. The controller will go through a short self-test and then display the reservoir fluid temperature.

LOCAL Start Up

Depress the ON/OFF key on the temperature controller. The unit will start and the SYS ON LED will illuminate.

To stop the unit, depress the ON/OFF key on the temperature controller.

When the unit is shut off, wait approximately five minutes before restarting. This allows time for the refrigeration pressures to equalize. If the pressures are not allowed to equalize, the compressor will short-cycle (clicking sound) and no cooling will occur.

REMOTE Start Up

Locate the J100 INTERFACE on the rear of the unit. Connect pin 1 to pin 12. The RMT ON/OFF indicator will illuminate. Connect pin 1 to pin 14 and the unit will start. See page 31 for additional information.

To stop the unit, disconnect pin 1 from pin 14.

When the unit is shut off, wait approximately five minutes before restarting. This allows time for the refrigeration pressures to equalize. If the pressures are not allowed to equalize, the compressor will short-cycle (clicking sound) and no cooling will occur.

Pressure Gauge

The RECIRCULATING PRESSURE gauge is located next to the flow control handle. The gauge indicates the operating pressure of the system.

INTERFACE Connector 15-pin Dsub Female

PIN	NAME	NOTES	DEFINITION
1	12VDC COMMON		Common for digital inputs (pins 13 and 14)
2	RESISTIVITY OUT		0-10VDC Analog Voltage Output: Reference to pin 6. This voltage output is proportional to the resistivity of the reservoir fluid: 0.5VDC / M-cm. (Ex 9.0V = 18Mohm-cm) (Max Load @ 10V = 5mA)
3	LOW LEVEL	Note 1	Dry Relay Contact: Reference to pin 11. Closes if either level switch is in the “low” position for more than 1 second.
4	TEMP/SENSOR	Note 1	Dry Relay Contact: Reference to pin 11. Closes immediately when any of the following occur: 1. High Temp Fault, 2. High Temp Warn, 3. Low Temp Fault, 4. Low Temp Warn, 5. RTD1 Fault/Warn, 6. RTD2 Fault/Warn, or 7. Resistivity Warn.
5	PUMP ON	Note 1	Dry Relay Contact: Reference to pin 11. Closes immediately when pump is turned on. Opens immediately when pump is turned off.
6	ANALOG GROUND		Common for analog signals (pins 2, 7 and 15)
7	RESERVOIR TEMP OUT		0-10VDC Analog Voltage Output: Reference to pin 6. This voltage output is proportional to the reservoir fluid temperature: Scale = 10mV / ^{O}C. (Ex 200mV = 20°C) (Max Load @ 10V = 5mA) * Optional Range = 0 – 10V (where: 0V = Low Temp Span, 10V = Hi Temp Span). Contact Factory for details.
8	LOW FLOW	Note 1	Dry Relay Contact: Reference to pin 11. Closes immediately when a low flow occurs while the pump is on. Note: To allow the pump to get up to speed at startup, the pump is allowed to run for 3 seconds before the low flow sensor is read.
9	FAULT NO	Note 1	Dry Relay Contact: Reference to pin 11. Closes after power up and no-faults present. Opens immediately when any of the following faults occur: 1. Low Flow, 2. Low Level, 3. Temp/Sensor, 4. High Pressure Fault, or 5. Heater High Temp Cutout.
10	FAULT NC	Note 1	Dry Relay Contact: Reference to pin 11. Compliment of pin 9 (open when pin 9 is closed).
11	RELAY COMMON		Common for all relay contacts (pins 3, 4, 5, 8, 9, 10).
12	REMOTE ON/OFF ENABLE		Digital Input: Reference to pin 1. Connect to pin 1 to allow unit to be remotely turned on/off through pin 14 REMOTE ON/OFF.
13	REMOTE SETPOINT ENABLE		Digital Input: Reference to pin 1. Connect to pin 1 to allow the setpoint to be changed remotely through pin 15 REMOTE SETPOINT IN.
14	REMOTE ON/OFF		Digital Input: Reference to pin 1. Connect to pin 1 to turn unit on. Disconnect to turn unit off. Note: Pins 1 and 12 must be connected to allow operation from this pin.
15	REMOTE SETPOINT IN		Analog Voltage Input: Reference to pin 6. Apply a DC voltage to this pin to adjust the unit’s setpoint: Range = 10mV/ ^{O}C. (Ex 200mV = 20°C) (Max Input Voltage = 10VDC, Input Impedance > 600K). * Optional Range = 0 – 10V (where: 0V = Low Temp Span, 10V = Hi Temp Span) Contact Factory for details.

Note 1:

All relay contacts (except for Pin 10) are normally OPEN when power is off. Pin 10 contacts are normally CLOSED when power is off. All relay contacts are rated: 250V/3A, <= .08 Ohm.

Section VI Optional Features

Automatic Refill Device

The automatic refill device is designed to maintain the correct level of cooling fluid in the reservoir. The device consists of a solenoid valve and a reservoir float switch. If the cooling fluid level falls, the float switch drops, opening the solenoid valve and allows makeup fluid to fill the reservoir. Once the cooling fluid level reaches the proper level, the float switch rises and the solenoid valve closes.

NOTE: Refill times depends on the facility water pressure.

The plumbing connection for the refill device is located at the right rear corner of the unit and is labelled AUTO REFILL. This connection is a $^{3}/_{8}$ inch OD stainless steel barbed fitting.

Connect this fitting to a makeup fluid source using $^{5}/_{16}$ or $^{3}/_{8}$ inch ID flexible tubing. Make sure all tubing connections are securely clamped.

Tubing is available from NESLAB. Contact our Sales Department for more information (see Preface, After-sale Support).

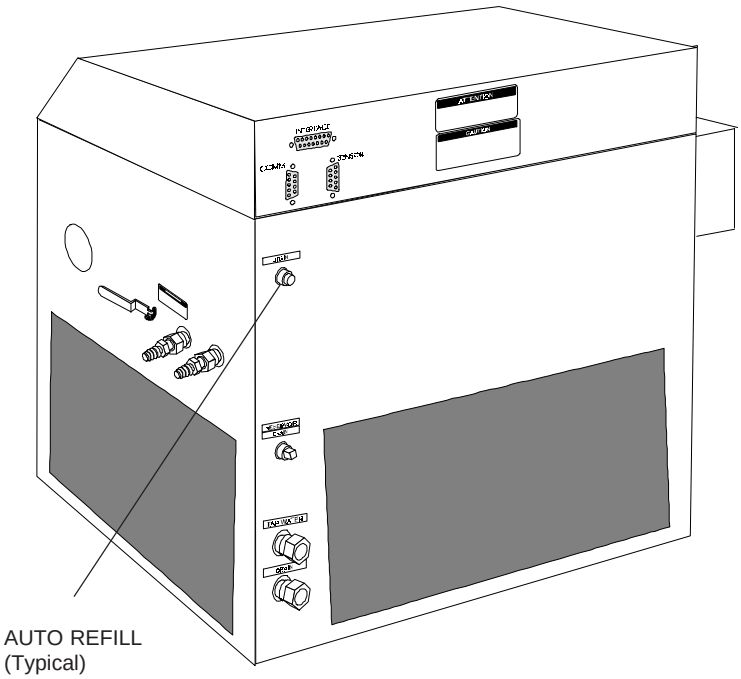

AUTO REFILL
(Typical)

Heater Package

The heater package option consists of an immersion heater in the unit's fluid reservoir, a high temperature limit device, a low-level switch, and a solid state zero-crossing relay. A HTC FAULT message on the controller will light if the high temperature limit device is tripped. The low-level switch will disconnect power to the heater if the heater surface is exposed to air.

The heater surface temperature may operate several degrees higher than the reservoir fluid. The limit device is factory set to a temperature above the upper limit of the temperature controller's range.

For personal safety and equipment reliability, only a qualified technician should perform the following procedure. Contact our Service Department for assistance (see Preface, After-sale Support).

To reset a tripped temperature limit device, lift and open the case top. The case top is secured to the unit base by a hinge between the case top and the base (along the rear of the unit), and by two spring clips located at the front corners, see illustration on page 7. To gain access to the temperature limit device, disengage the spring clips with a flat bladed screw driver and lift the front of the case top and tilt it back. A support brace, located on the right side of the inner case, will stop and support the case top.

You must identify and correct the fault before restarting the unit. The protection device and the heater power connections are located on top of the fluid reservoir. The protection device has a small, black reset button. Press the reset button to restore heater operation and clear the HTC fault. Cycle the MASTER POWER ON OFF switch to clear the flashing HTC FAULT indication.

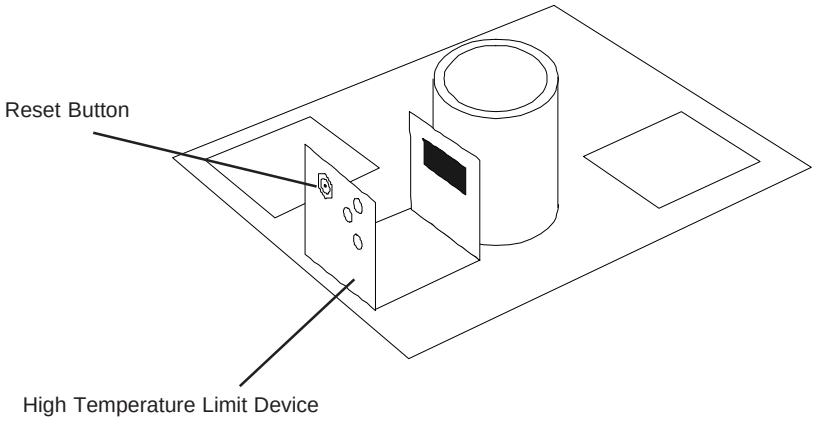

Some units equipped with heaters do not have a power cable. Installation of the cable is your responsibility. Wire the unit in conformance to local, state and federal electrical codes. Double check all wiring to make sure it is properly connected and protected from the elements.

The unit construction provides extra protection against the risk of electric shock by grounding appropriate metal parts. The extra protection may not function unless the power cord is connected to a properly grounded outlet. It is your responsibility to assure a proper ground connection is provided. For personal safety and equipment reliability, only a qualified technician should perform the following procedure.

To access the connections open the pullbox.

- Insert your cable through the conduit.
- Locate 3TB and 4TB and connect your cable.
- Close the pullbox.

Note: Pullbox shown with heater and remote condenser options.

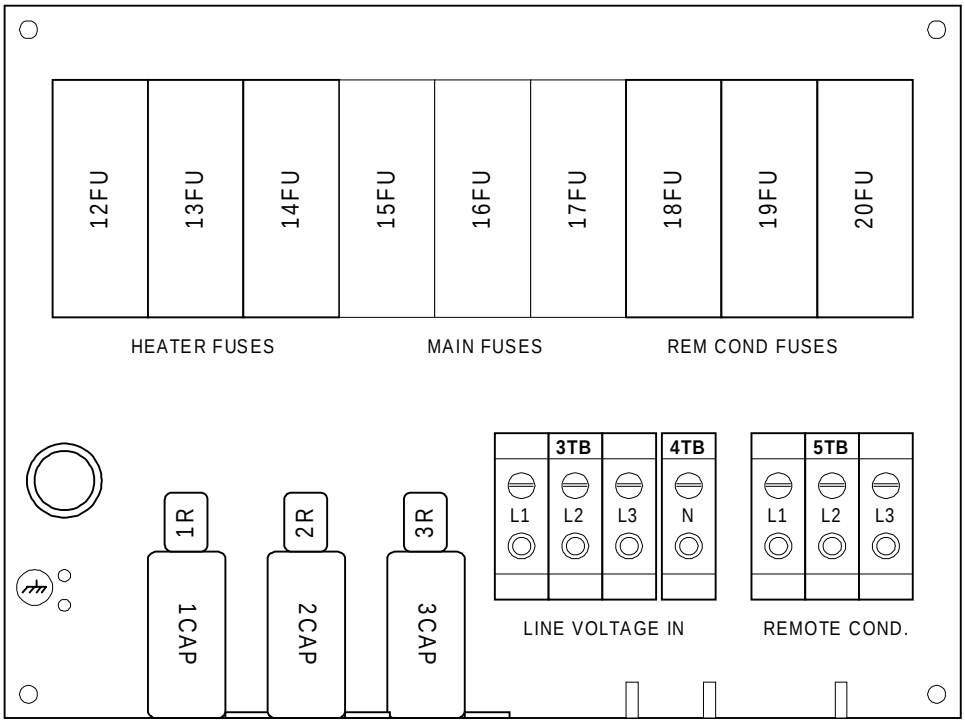

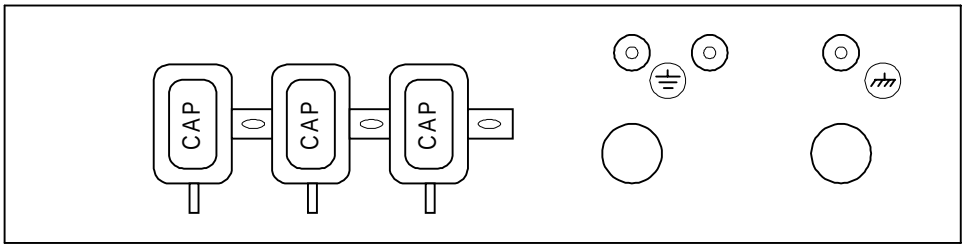

SENSOR Connector

The unit can be configured to have its temperature controlled from a remote location. Temperature is read on the controller's RTMP display. In the Operator's Loop, RTMP is the sensed temperature, TEMP indicates the HX's tank temperature. See page 26.

The remote probe is connected to a 9-pin male "D-sub" located on the rear of the unit. Ensure your remote application does not cause the HX to exceed its temperature range. For safety reasons the HX will shut down if either limit is exceeded by 7°C.

This is a 3-wire RTD probe. It must be calibrated before initial use, see Appendix A.

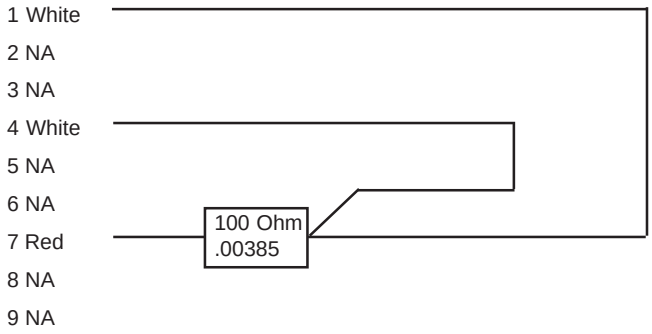

COMM Connector

COMM is a 9-pin female "D-sub" located on the rear of the unit used for remote operation. The unit can be configured to operate from a PC comm or remote box option. See pages 27 to 28. For NEScom software information, see Appendix B. For serial communications protocol see Appendix C.

When using the remote box option, the fastest way to return from remote to local is by pressing and holding the enter key and then pressing the next key on the local controller.

Going from local to remote is not available at the remote box.

The pin out information for either configuration is:

RS-232 (NEScom)		**RS-485 (Remote Box)**	
1	Not used	1	Ground
2	TX	2 -7	Not used
3	RX	8	T+
4	Not used	9	T-
5	Ground		
6-9	Not used		

Remote Box

The remote box mirrors the unit's controller. The remote box operates by sending and receiving RS485 serial communication. The remote box is attached to the unit by an RS485 cable with 9-pin D subminature connectors, see page 35 for pin out information.

Connect the cable to the 9-pin connector on the rear of the remote box and the 9-pin COMM port on the unit. The cable is available in 25, 50, 75, 100 and 200 foot lenghts.

Power up the local unit and the remote box. For safety reasons, the unit cannot be put in the remote mode by the remote box. The unit is put in remote mode by entering the local unit's Setup Loop and enabling the RS485 mode, see pages 27 - 28.

The remote box will momentarily display CONNECTING and then the display will show the current reservoir temperature. CONNECTING indicates that communication is not yet established between the local unit and the remote box. If the CONNECTING display does not extinguish check the connections and then toggle the power to the unit. Run the Operator's Loop, it should display REMOTE. If not, rerun the Setup Loop and ensure changes are saved. Check to see that the unit is in RS485 mode by observing that the REMOTE ENABLE light on the remote controller is lit.

While in the remote mode, the local controller only mirrors the remote controller's display. However, you do use the local controller to return to the local mode. Press and hold the local controller's enter key and then press the next key. The REMOTE light will turn off.

The remote box also has a 15-pin connector for standard 10mV/°C temperature output (between pin 7 and referenced to pin 6). It can be used for a chart recorder or other recording device. An optional 0 - 10VDC signal is available.

The remote box can be configured for 110V or 220V operation. The voltage is displayed on the power inlet module located on the rear of the remote box. To change the voltage pry the module out from the power connection. Remove the voltage plug from the module and rotate it 180°. Reinstall the plug. The desired voltage should be displayed. Reinstall the inlet module.

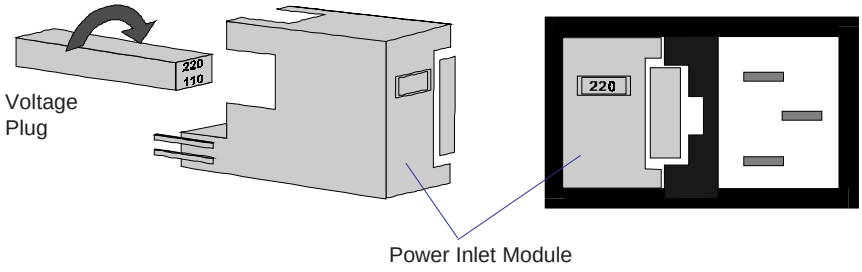

External Pressure Regulator

For applications requiring a maximum pressure less than 55 psi, an External Pressure Reducer (EPR) is available. An EPR allows an adjustable operating pressure of 10 to 50 psi. If the pressure of the fluid leaving the unit exceeds the valve setting the relief valve will bypass the fluid back into the unit to relieve the pressure. The back pressure of the connected equipment and the flow rate of the recirculating fluid to your application determine the pressure of the system.

Connect the EPR assembly as shown below. Tighten the hose clamps tight enough to prevent leakage. Do not overtighten or the clamps will “bite” into the flexible tubing and can cause excessive wear.

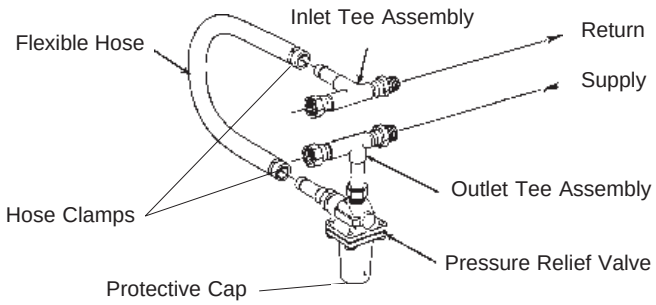

Connect the outlet tee assembly to the inlet of your application. Connect the inlet tee assembly to the outlet of your application.

Adjustment

When adjusting the relief valve some leaking may occur, place a container under the valve during adjustment.

Remove the protective cap and locate a threaded fitting with a slot for a large screwdriver. Hold the threaded fitting in place and loosen the lock nut on the valve body until it is almost flush with the threaded fitting. Unscrew the threaded fitting three to four turns. (If the threaded fitting unscrews completely from the valve housing, screw it back in two to three turns.)

To simulate blockage, close (or pinch off) the hose between the EPR outlet tee assembly and your application. Monitor the operating pressure of the HX unit. Turn the threaded fitting until the desired relief pressure is set (the EPR valve cannot be set lower than the total back pressure of your instrument, or flow will not be received).

Tighten the locknut to secure the position of the threaded fitting. Open the hose between the EPR outlet tee assembly and your application.

Nitrogen Purge

Units equipped with nitrogen purge valves are designed to accept a constant flow of dry nitrogen into the reservoir. The nitrogen blankets the cooling fluid reducing fluid evaporation.

Remove the reservoir cover by removing the screws. Fill the reservoir with fluid. Replace the reservoir cover and screws. Connect the nitrogen line to the valve on the reservoir cover.

A pressure regulator, set to 0.5 psig (0.35 kg/cm^3) or lower, should be used to prevent fluid overflow.

Particulate Filters

Particulate filter assemblies attach to the supply side of the recirculation water. Refer to the separate manual attached to the filter assembly.

The frequency for cleaning/changing the filter depends on your usage. Should the unit's performance be degraded, check the filter.

Filters are available from NESLAB, contact our Customer Service Center. Before calling refer to the serial number label on the rear of the unit to obtain the following information:

-BOM number
-Serial number

Section VII Maintenance

Service Contracts

NESLAB offers on-site Service Contracts designed to provide extended life and minimal downtime for your unit. For more information, contact our Service Department (see Preface, After-sale Support).

Condenser Cleaning (Air-cooled units only)

For proper operation, the unit needs to pull substantial amounts of air through a finned condenser. A build up of dust or debris on the fins of the condenser will lead to a loss of cooling capacity.



Eventually the compressor will overheat and the High-Pressure Cutout (HPC) will activate and temporarily shut down the unit. The HPC will cycle the unit on and off until the condenser is cleaned. After a period of time, this cycling will damage the unit's compressor.

The frequency of cleaning depends on the operating environment. We recommend making a monthly visual inspection of the condenser after initial installation. After several months, the frequency of cleaning will be established.

For "standard" air-cooled units, periodic vacuuming of the fins on the condenser is necessary. For units with the optional remote air-cooled condenser, remove any debris from around the condenser site. If a visible accumulation of dust or dirt is found on the condenser fins, the condenser should be cleaned with a condenser cleaning solvent and rinsed with water.



Exercise caution not to damage the condenser fins or coil. Condenser fin or coil damage can result in a loss of performance and, in extreme cases, refrigeration system failure.

Hoses

The unit's internal and external hoses and clamps should be inspected and tightened on at least a semiannual basis.

Algae

To restrict the growth of algae in the fluid reservoir, we recommend the reservoir cover be kept in place and that all recirculation lines be opaque. This will eliminate the entrance of light, which is required for the growth of most common algae.

NESLAB recommends the use of Chloramine-T, 1 gram per 3.5 liters. Other algicides can be harmful to the unit's internal components. Contact NESLAB for additional information.

Section VIII Service

For personal safety and equipment reliability, only a qualified technician should perform the following procedure. Contact our Service Department for assistance (see Preface, After-sale Support).

Configuration

Case Top

The unit has a hinged case top to allow service access. The case top is secured to the top of the unit base by a hinge between the case top and base (along the rear of the unit), and by two spring clips located at the front corners, see illustration on page 7. To gain access to the pump assembly or the reservoir area, disengage the spring clips with a flat bladed screw driver and lift the front of the top cover and tilt it back. A support brace, located on the right side of the inner base, will stop and support the case top. Ensure the spring clips engage when the top is lowered back into position.

Reservoir Cover

Access to the inside of the fluid reservoir is necessary to clean the reservoir. The figure below illustrates a typical layout of the components mounted on top of the reservoir cover. The component layout varies depending on the unit size. If you are unable to identify the components on your unit's reservoir cover, contact our Customer Service Department for assistance (see Preface, After-sale Support).

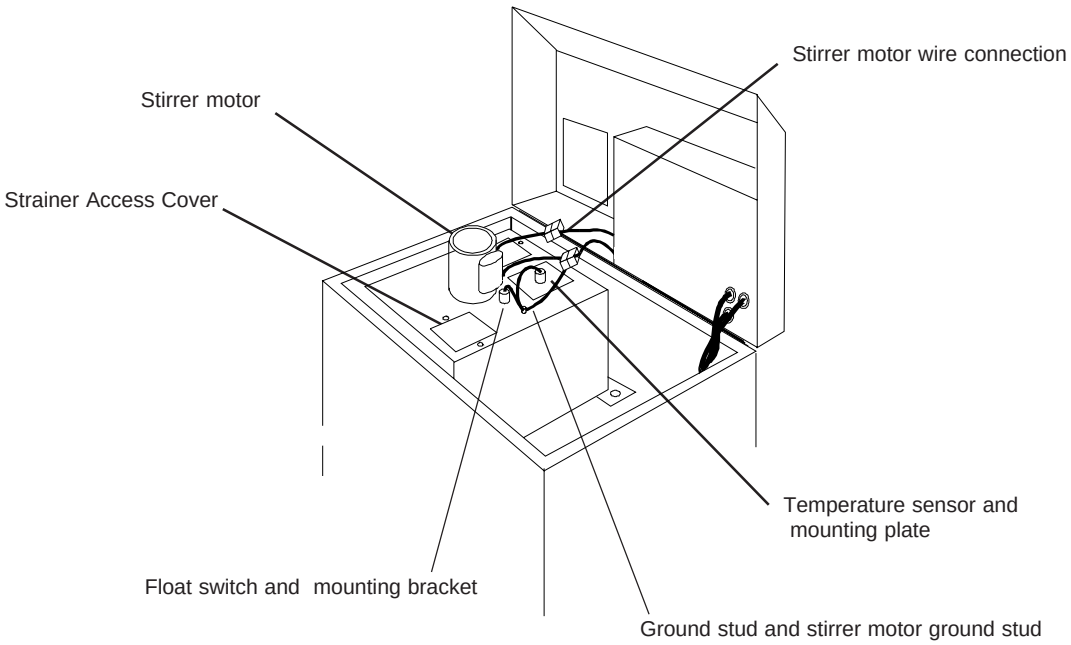

Disconnect the unit from its power source before removing the reservoir cover.

Locate the reservoir stirrer motor (units with plate heat exchangers and HX-75s do not have a stirrer motor; HX-500s and HX-750s have two stirrer motors). Disconnect the motor wires at the plug located on the side of the electrical box cover. Also disconnect the green ground wire that connects the ground stud on the reservoir cover to the unit's grounding bar.

Locate the float switch mounting bracket. Remove the two stainless steel screws that secure the bracket to the reservoir cover. Carefully remove the mounting bracket and place the assembly in an area adjacent to the reservoir. Make sure not to strain the connecting wires.

Locate the temperature sensor mounting plate. Remove the two stainless screws that secure the bracket to the reservoir. Carefully remove the sensor mounting plate with the sensor(s) attached and place the assembly in a protected area adjacent to the reservoir. Make sure not to damage the sensor(s) or strain the connecting wires.

Remove the stainless steel screws that secure the reservoir cover to the reservoir. Remove the cover and place it to one side in a manner that protects the stirrer motor blades from being bent.

Service Access Panels
Service access panels on your unit allow easy access to the pump and refrigeration assemblies. Panel location varies with the size and type of unit. The panels are designed to allow removal without disconnecting the HX from the instrument being cooled.



Disconnect the unit from its power source before removing any of the access panels.

Reservoir Cleaning

Periodic reservoir cleaning is necessary. We recommend making a monthly visual inspection of the reservoir after initial installation. After several months, the frequency of cleaning will be established.



Disconnect the unit from its power source and drain the reservoir before cleaning the reservoir.

Lift the top cover to access the reservoir. Remove the reservoir cover as described in Section VIII, Configuration. Clean the reservoir with a cleaning fluid compatible with the recirculating system and the cooling fluid.



Do not use steel wool or other abrasive materials. They can scratch the stainless steel surface and initiate rusting.

When the reservoir is clean, reassemble the cover assembly and close the case top. Refer to Section III, Filling Requirements for instructions on replacing the cooling fluid.

Pump Strainer

Units with PD and TU pumps have pump strainers that require cleaning. If debris is drawn into the recirculating system, the pump strainer will prevent the material from being drawn into the pump and damaging the pump vanes.

After initial installation, the strainer may become clogged with debris and scale. Clean the strainer after the first week of installation. After this first cleaning, a monthly visual inspection is recommended. After several months, the frequency of cleaning will be established.

Disconnect the power cord from the power source and drain the fluid reservoir before cleaning the strainer. Do not operate the unit with any strainer removed.

The wire mesh pump strainer is located in the reservoir on the pump suction line. Remove the strainer access panel located on top of the reservoir cover to access the strainer, see illustration on page 41.

Cover the strainer with a plastic bag to help catch any debris that may become dislodged during removal.

Unscrew the strainer and rinse it with water. Replace the strainer. Refer to Section III, Filling Requirements for instructions on replacing the cooling fluid.

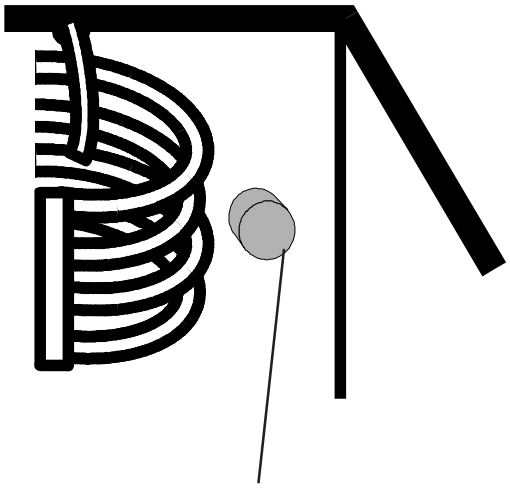

Pump Strainer

Pump Motor Lubrication

Units with PD pumps require pump motor lubrication. Refer to the pump identification label on the rear of the case top to identify the specific pump in your unit.

Several companies manufacture motors used to drive the pump. These motors use sleeve type bearings with large oil reservoirs. Oiling instructions are generally posted on each motor. In the absence of instructions, add approximately 30 to 35 drops of SAE 20 non-detergent oil in each fill hole on the following schedule (SAE 20 = 142 CS viscosity):

Duty Cycle	Oiling Frequency
Continuous	Once every year
Intermittent	Once every 2 years
Occasional	Once every 5 years

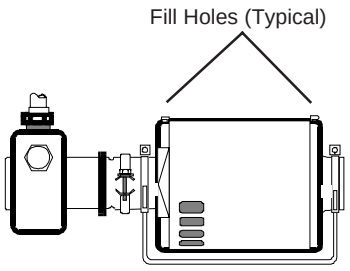

Phase Rotation

Three-phase units with three-phase pump motors are equipped with a phase rotation interlock. Refer to the serial number label on the rear of the case top for the specific electrical requirements of your unit. The interlock prevents the unit from starting if the phase rotation is wrong and causes a system fault. If the unit will not start, see Section IX, Checklist. If the options in the checklist are not applicable, the problem may be phase rotation.

If phase rotation is the problem, disconnect the unit from its power source, remove the pullbox cover. Reverse any two line conductors on the line side of the relay. See page 35.

Never remove the green ground wire.

Replace the pullbox cover. Reconnect the unit to its power source. If the unit will not start, contact our Customer Service Department.

High/Low Pressure Cutouts

Should the unit's refrigeration discharge pressure become too high the high-pressure cutout will activate and shut down the compressor. High pressures can be caused by a lack of cooling water to the compressor or debris in the refrigeration lines.

Should the unit's refrigeration discharge pressure become too low the low-pressure cutout will activate and shut down the compressor. Low pressures can be caused by a leak in the refrigeration lines.

If a fault occurs, the controller displays a SYS FAULT message and the compressor will shut down. Once the cause of the problem has been identified and corrected you must manually reset the cutout.

Units have a yellow sticker indentifying the cutout location. Locate the white reset switch on the cutout. Press in on the switch until a "click" is heard. If the reset does not "click" the cutout was not activated and the unit shut down occurred for another reason.

Pump Motor Overload Protector (3Ø Pumps Only)

The overload protector prevents the pump motor from exposure to excessive current. If an overload fault occurs, due, for example, to excessive pressure or flow, or excessive ambient temperature, the overload protector will shut off the pump motor. The overload protector will automatically reset after approximately one to two minutes.

If a fault occurs, the controller displays a SYS FAULT message and the pump will shut down. Once the cause of the fault is identified and corrected, press the controller's RESET button to restart the pump.

The overload protector can be adjusted to require manual resetting after an overload fault. Contact our Service Department for adjustment instructions (see Preface, After-sale Support).

The pump motor overload protector is located under the bonnet inside the electrical enclosure.

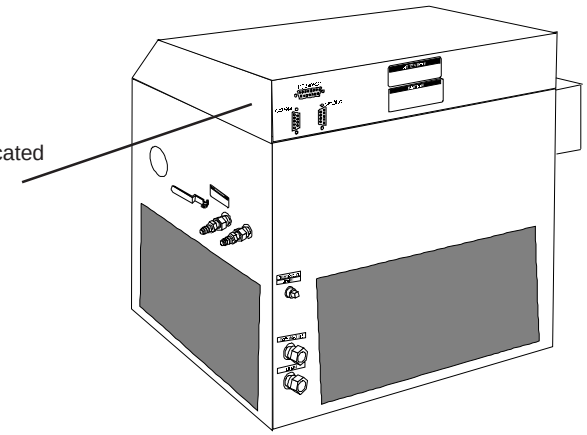

Pressure Relief Valve
(PD and TU Pumps Only)

Units with a PD or TU pump have an adjustable pressure relief valve. Refer to the pump identification label on the rear of the case top to identify the specific pump in your unit.

The pressure relief valve establishes the maximum operating pressure of the unit. If the pressure of the fluid leaving the pump exceeds the valve setting, the relief valve will bypass the fluid within the unit to relieve the pressure. The valve does not determine the actual operating pressure; the back pressure of the connected equipment and the setting of the flow control valve determine the operating pressure of the system. If adjustment seems necessary, consult our Service Department for assistance.

Before calling, refer to the serial number label on the rear of the case top to obtain the following:

- *BOM number*
- *Serial number*

Suction Discharge Pressure Speed Check (R-22)

Air-Cooled Standard and High Temperature Units (All Pump Types)[1]

Unit	Suction (psi)	Discharge (psi)	Speed Check (°C/Minute)
HX-75	77 - 84	225 - 250	1.5 - 1.7
HX-150	70 - 73	240 - 270	2.0 - 2.5
HX-300	84 - 105	270 - 305	2.4 - 2.7
HX-500	80 - 90	215 - 235	2.0 - 2.4
HX-750	65 - 75	185 - 215	

Water-Cooled Standard and High Temperature Units (All Pump Types)[2]

Unit	Suction(psi)	Discharge(psi)
HX-75	72	170
HX-150	65	175
HX-300	73 - 78	180
HX-500	75 - 82	150
HX-750	50 - 60	180

1. 27°C unit temperature, water in reservoir, access panel removed.
2. 25°C unit temperature, water in reservoir.

NOTE: Refrigerant R-22. For low-temperature units please call NESLAB.

Section IX Troubleshooting

Displaying Software Version

To display the software version ensure the controller is in the Operator's Loop and displaying the reservoir fluid temperature. Depress and hold the enter key  . Press the YES NO YES keys and the display will indicate CALIBRATE? While continuing to hold the enter key press the YES NO YES keys again. The display will now indicate the software version, for example 000550.36h. Press NO to return to the reservoir fluid temperature display.

Checklist

Unit will not start or cycles on and off

HX-300s through HX-750s are equipped with a compressor crankcase heater. The crankcase heater warms the oil in the compressor and prevents refrigerant from mixing with the oil. Before start up, the unit must be connected to its power source for at least 12 hours. This allows time for the oil to be heated and separate from the refrigerant.

For CE Mark units, check the circuit breaker setting on the bonnet.

For units equipped with an optional EMO button, check its position.

Check for a fault condition.

Check the INTERFACE connections on the rear of the unit.

Check power source for correct voltage output. Refer to the serial number label on the rear of the unit for the specific electrical requirements of your unit. Power source must be specified voltage, ±10%.

Check house circuit breaker.

On three phase units with three phase pump motors, the phase rotation may be reversed (see Section VIII, Phase Rotation).

On water-cooled units, ensure the facility water is on and make sure the cooling water supply is connected to the TAP WATER connection, not the DRAIN connection. Check the High Pressure Cutout, it may need to be reset (see Section VIII, High/Low Pressure Cutouts).

On air-cooled units, ensure the condenser fins are clean and that proper airflow is not restricted.

Unit will not circulate fluid

Check the tubing, strainer, and any optional filters/cartridges between the unit and your application for obstructions or for cleaning/replacement.

Units with PD and TU type pumps may require pump strainer cleaning. Refer to the pump identification label on the rear of the case top to identify the specific pump in your unit. For instructions on cleaning the pump strainer (see Section VIII, Pump Strainer).

On units with CP type pumps, if the back pressure of the instrument being cooled is greater than the maximum pressure of the pump, adequate flow may not be obtained. Check for obstructions in the tubing.

Inadequate temperature control
Check/adjust the setpoint in the Operator's Loop.

Make sure the installation of the unit is in compliance with the conditions described in Section III.

Make sure the heat load of the instrument being cooled is not greater than the cooling capacity of the unit.

Ensure the unit is not configured for optional remote probe operation.

When the unit is shut off, wait approximately five minutes before restarting. This allows time for the refrigeration pressures to equalize. If the pressures are not allowed to equalize, the compressor will short-cycle (clicking sound) and no cooling will occur.

The controller circuit board may be defective.

No serial communications
All units are tested for serial communications before they leave the factory. Ensure the RMT COMM indicator on the controller is illuminated.

Check all communications commands, they *must be exact*. See Appendix C.

Check communications settings. The protocol uses an RS-232 serial interface with the parameters: 9600 baud, 8 data bits, 1 stop bit and no parity.

Check all wiring for proper connections or possible shorts.

Software to verify serial communication is available from NESLAB.

Returning to local mode
When operating using the remote box, the quickest way to return to the local mode is to press the NEXT and ENTER keys on the local controller.

Service Assistance

If, after following these troubleshooting steps, your unit fails to operate properly, contact our Service Department for assistance (see Preface). Before calling, please obtain the following information:

BOM number
Serial number
Voltage of unit
Voltage of power source
Temperature of facility water
Software version

Section X Diagrams

Refrigeration Flow Diagram
(HX-75 and HX-150)

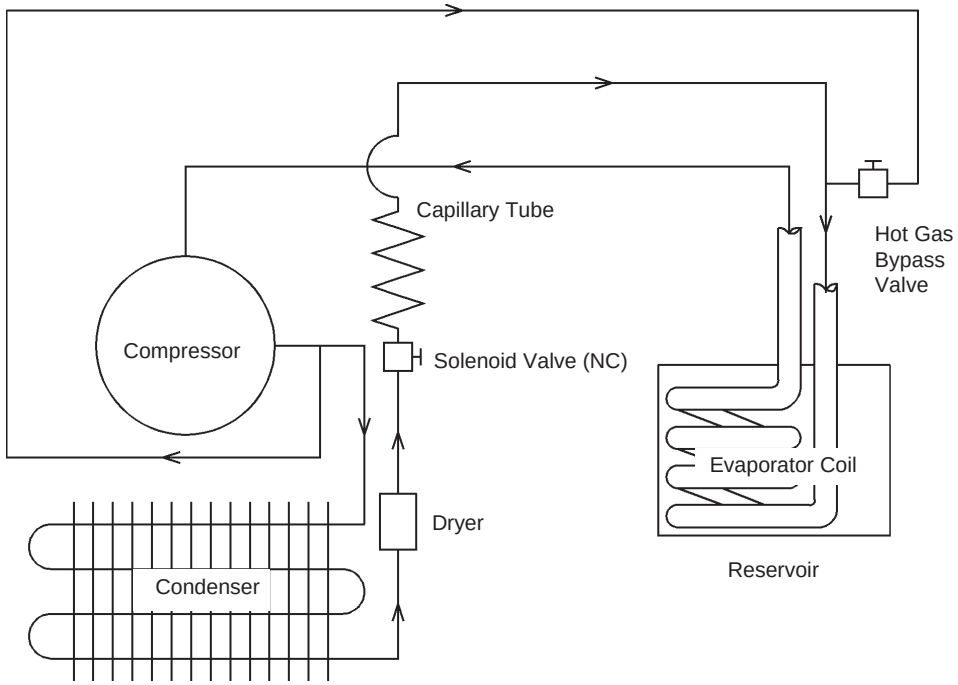

Refrigeration Flow Diagram
(HX-300 through HX-750)

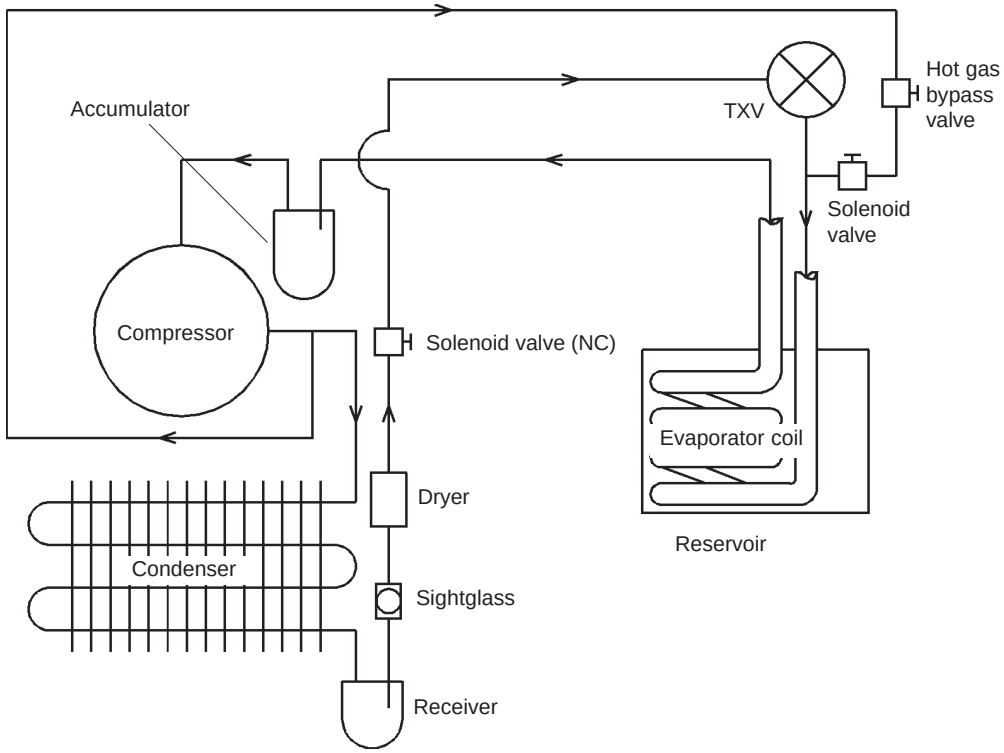

Pump Flow Diagram (CP Pumps)

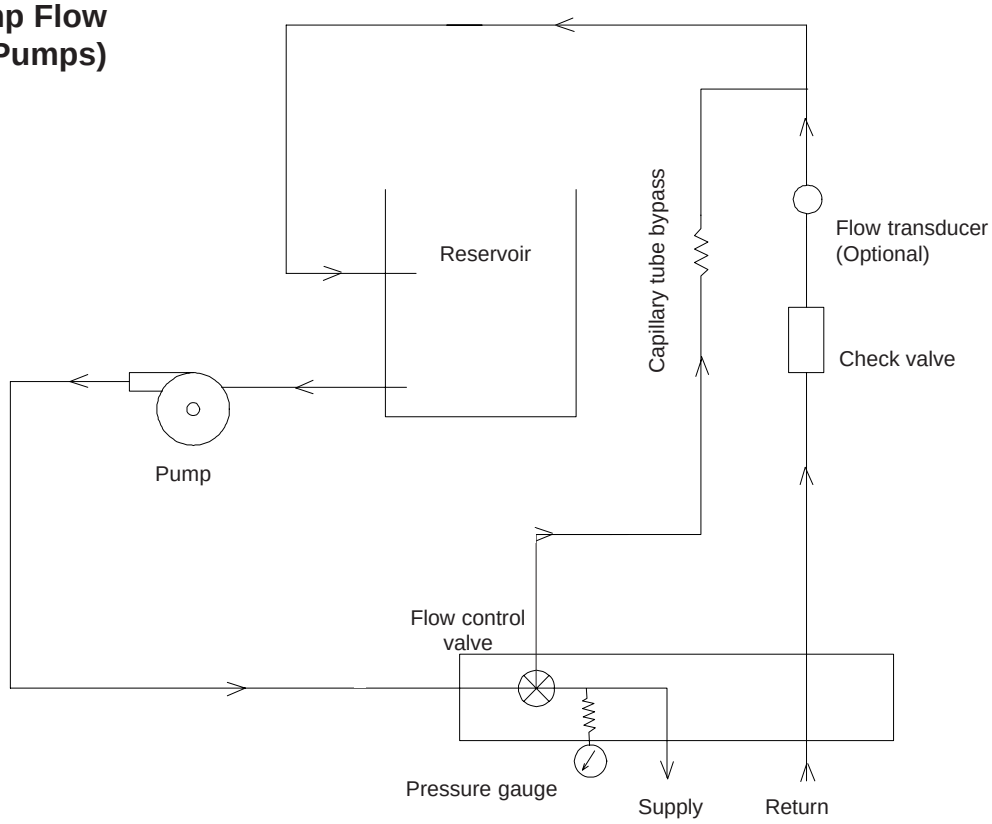

Pump Flow Diagram (PD and TU Pumps)

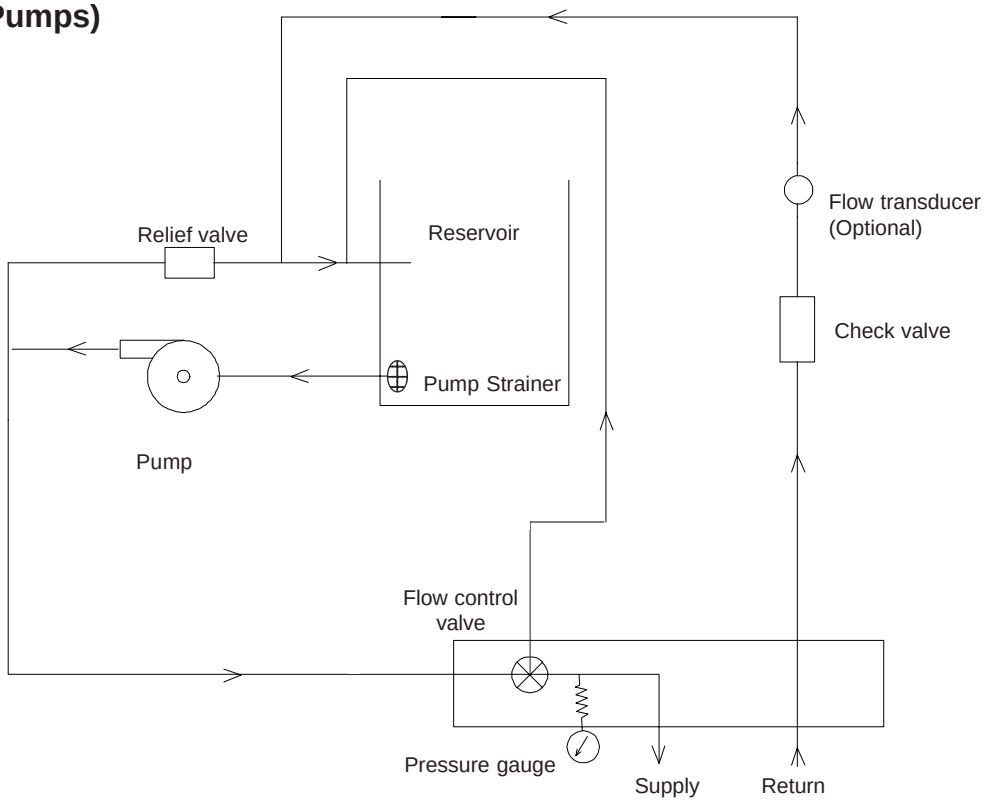

Dimensions

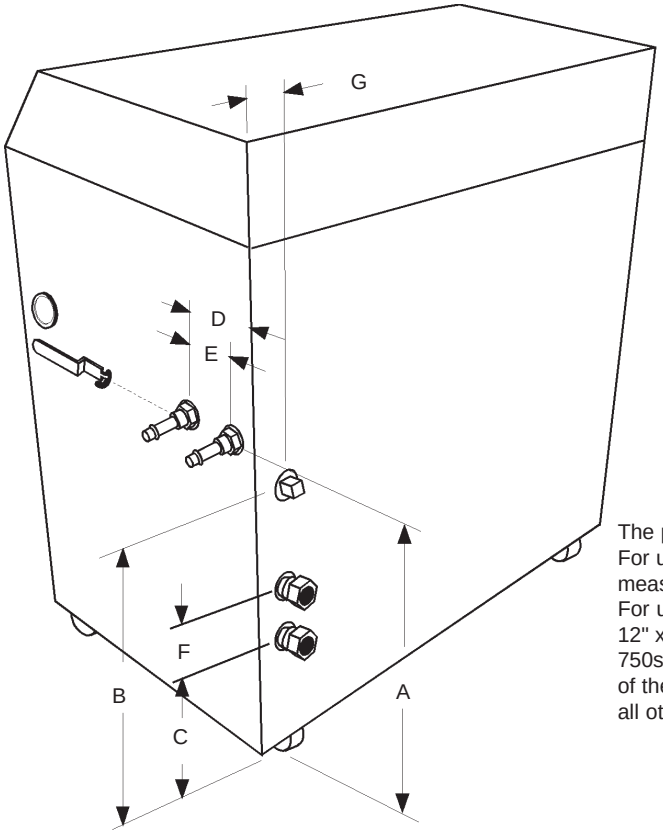

The pullbox comes in two sizes. For units without heaters the box measures 6" x 6" x 4" (H x W x D). For units with heaters it measures 12" x 16" x 4" (H x W x D). On HX-750s the box is located on the rear of the unit, it is on the left side for all other units.

Unit Dimensions	HX75	HX150	HX300	HX500	HX750AC*
Dimension A	16	20	25 3/8	25 1/4	41
Dimension B	15 1/4	19 1/4	23 1/2	21 1/8	33 3/4
Dimension C	8 1/4	9 1/4	8 3/8	5 1/2	NA
Dimension D	7 1/4	7 1/4	7 1/2	9 1/2	9 1/2
Dimension E	3	3	3	3	3
Dimension F	3	3	3	5 1/2	NA
Dimension G	1 3/8	1 3/8	1 1/2	2 1/4	NA
Dimension H	2 1/2	2 1/2	2 3/8	2 1/4	2 1/4
Dimension I	25 7/8	28 1/2	32 1/2	36 1/8	36
Dimension J	48 1/2	54	64 7/8	73 1/2	86 1/4
Crate Dimensions (H x W x D)	46x30x27	49x33x29	55x40x33	61x54x36	74x54x36

* Air-cooled units. Water-cooled units are the same size as the HX-500 units.

1. Dimensions are given in inches, ±1/8 inch.
2. Model HX-750 with a water-cooled condenser has the same dimensions as an HX-500.
3. Dimension A is the distance from the floor to the center of the SUPPLY and RETURN connections.
4. Dimension B is the distance from the floor to the center of the DRAIN connection.
5. Dimension C is the distance from the floor to the center of the tap water outlet connection.
6. Dimension D is the distance from the center of the SUPPLY connection to the rear of the unit case.
7 Dimension E is the distance between the SUPPLY and RETURN connections
8. Dimension F is the distance between the center of the TAP WATER connections (upper inlet and lower outlet).
9. Dimension G is the distance from the edge of the unit case to the center of the three plumbing connections.
10. Dimension H is the distance from the floor to the bottom of the case, height of the castors (not shown).
11. Dimension I is the depth of the unit with the case top open (not shown).
12. Dimension J is the height of the unit with the case top open (not shown).

Appendix A Remote Probe Calibration

Before using the optional remote probe it must be calibrated. To do this you run the unit to its temperature extremes and use the controller's Operator's and Calibration Loops.

Install the remote probe into the SENSOR 9-pin "D-sub" located on the rear of the unit.

Use the Operator's Loop to run the unit to its high-end temperature limit. When the setpoint is reached press and hold the ENTER key and then press YES-NO-YES to display CALIBRATE? Press YES.

Press NEXT until RMT RTD? is displayed. Press YES to display HI CAL? HI xxx.xC will be displayed, use the YES/NO keys to reach the desired temperature and the press ENTER. Press the NEXT key until SAVE? is displayed, press YES to return to the Operator's Loop.

Use the Operator's Loop to run the unit to its low-end temperature limit. When the setpoint is reached press and hold the ENTER key and then press YES-NO-YES to display CALIBRATE? Press YES.

Press NEXT until RMT RTD? is displayed. Press YES to display HI CAL? Press NO and LOW CAL? is displayed. Press YES and LOWxxx.xC will be displayed, use the YES/NO keys to reach the desired temperature and the press ENTER. Press the NEXT key until SAVE? is displayed, press YES to return to the Operator's Loop.

The probe is now calibrated. Re-calibrate as necessary or if the probe is replaced.

Appendix B Programming Software

The NESLAB Communications Software is a user-friendly software that allows you to automate your temperature control process. The software includes a 3½" disk, comprehensive operator's manual and a toll-free number to a trained technical staff.

NEScom Software allows you to write custom temperature programs for our Digital or Microprocessor based temperature control apparatus. Choose upper or lower temperature limits and monitor system status with an alarm. NEScom can also record your results on a user selectable graph. NesCom must be used with an IBM or 100% compatible computer.

Select from easy to use product icons.

Create graphs and charts.

Easily configure ramping functions that set the setpoint over time.

View pop-up alarm windows that display if an alarm condition occurred.

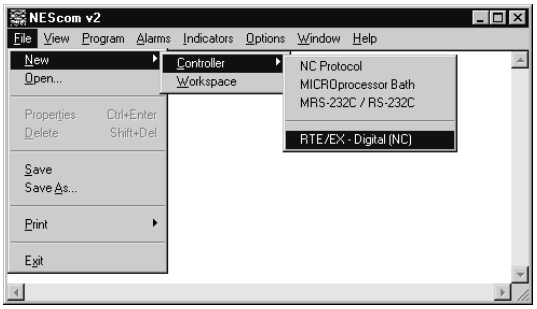

Select software functions from the easy to use pulldown menus.

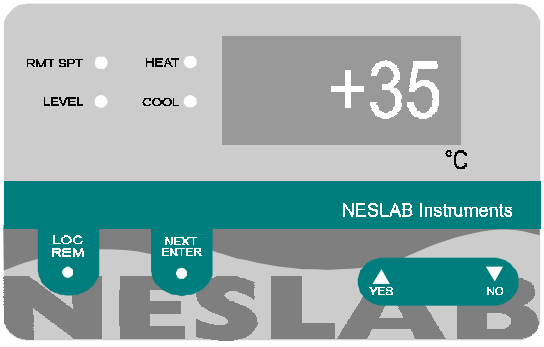

View a virtual controller screen which allows remote monitoring and operation of product control panel.

Appendix C Serial Communications Protocol

NOTE: This appendix assumes you have a basic understanding of communications protocols.

All data is sent and received in binary form, do not use ASCII. In the following pages the binary data is represented in hexadecimal (hex) format.

The Neslab Serial Communications Protocol, NC, is based on a master-slave model. The master is a host computer, while the slave is the bath's controller. Only the master can initiate a communications transaction (half-duplex). The slave ends the transaction by responding to the master's query. The protocol uses an RS-232 serial interface with the parameters: 9600 baud, 8 data bits, 1 stop bit and no parity.

NOTE: Before the unit will communicate, RS232 must be turned on in the controller's Setup Loop.

The unit can be controlled through your computer's serial port by using the unit's standard 9-pin RS-232 connection. Data read of the serial port connects to the data transmit (pin 2) of the unit. Data transmit of the serial port connects to data read (pin 3) of the unit.

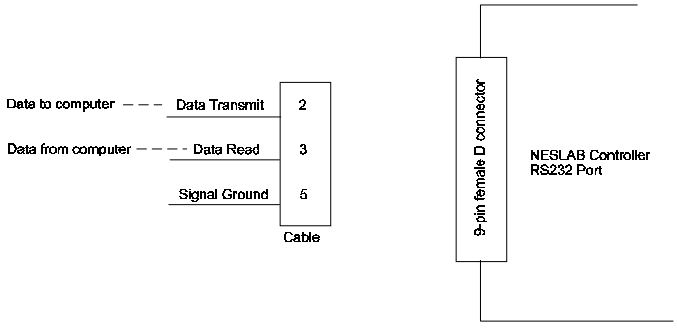

Communication cables are available from NESLAB. Contact our sales department for additional information.

All commands must be entered in the exact format shown in the tables on the following pages. The tables on on the last two page of this Appendix show all commands available, their format and responses. Controller responses are either the requested data or an error message. The controller response *must* be received before the host sends the next command.

The host sends a command embedded in a single communications packet, then waits for the controller's response. If the command is not understood or the checksums do not agree, the controller responds with an error command. Otherwise, the controller responds with the requested data. If the controller fails to respond within 1 second, the host should resend the command.

NEScom Serial Communications Protocol

NOTE: All byte values are shown in hex, hex represents the binary values that must be sent to the bath. **Do not use ASCII.**

The framing of the communications packet in both directions is:

	Checksum region						
Lead char CA	Addr-MSB 00	Addr-LSB 01	Command	n d-bytes	d-byte 1 ...	d-byte n	Checksum

Lead char	CA (hex).
	Device address is 1
Addr-msb	Most significant byte of device address is 00 hex.
Addr-lsb	Least significant byte of device address is 01 hex.
Command	Command byte (see Table 1).
n d-bytes	Number of data bytes to follow (00 to 03 hex).
d-byte 1	1st data byte (the qualifier byte is considered a data byte).
...	...
d-byte n	nth data byte.
Checksum	Bitwise inversion of the 1 byte sum of bytes beginning with the most significant address byte and ending with the byte preceding the checksum. (To perform a bitwise inversion, "exclusive OR" the one byte sum with FF hex.)

The master requests information by sending one of the Read Functions as shown in Table 1. Since no data is sent to the bath during a read request, the master uses 00 for the number of data bytes following the command byte.

The bath will respond to a Read Function by echoing the lead character, address, and command byte, followed by the requested data and checksum. When the bath sends data, a qualifier byte is sent first, followed by a two byte signed integer (16 bit, MSB sent first). The qualifier byte indicates the precision and units of measure for the requested data as detailed in Table 2.

As an example, the master requests to read internal temperature by sending:



If the temperature is -10.5°C, the slave would reply:

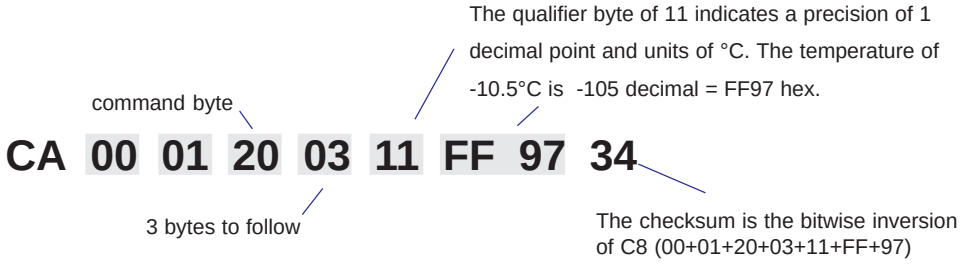

The master sets parameters in the bath by sending one of the Set Functions as shown in Table 1. The master does not send a qualifier byte in the data field. The master should be preprogrammed to send the correct precision and units (it could also read the parameter of interest first to decode the correct precision and units needed).

For example, if the master wants to set the setpoint to 30°C, it would send :

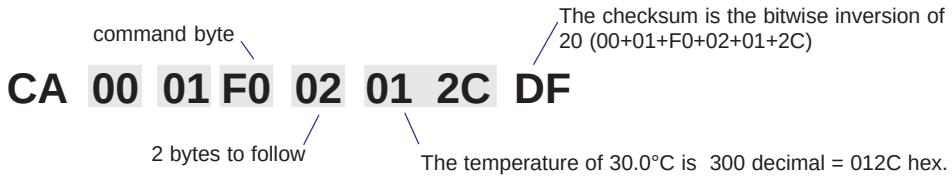

The slave responds:

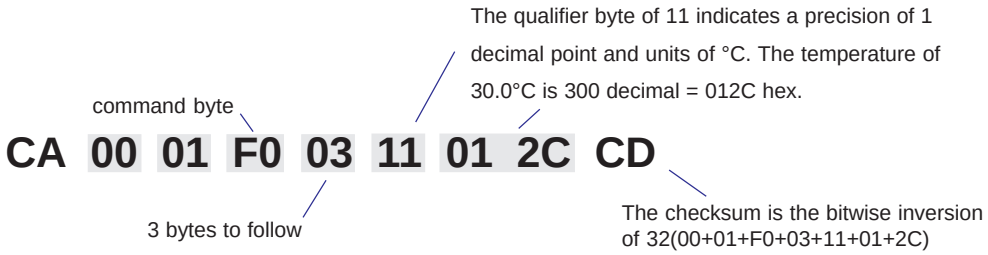

Table 1 Commands (All bytes are in hex)

FUNCTION	MASTER SENDS	UNIT RESPONDS
READ		
Read Internal Temperature	CA 00 01 **20** 00 DE	CA 00 01 **20** 03 qb d1 d2 cs
Read External Sensor	CA 00 01 **21** 00 DD	CA 00 01 **21** 03 qb d1 d2 cs
Read Setpoint (control point)	CA 00 01 **70** 00 8E	CA 00 01 **70** 03 qb d1 d2 cs
Read Low Temperature Limit	CA 00 01 **40** 00 BE	CA 00 01 **40** 03 qb d1 d2 cs
Read High Temperature Limit	CA 00 01 **60** 00 9E	CA 00 01 **60** 03 qb d1 d2 cs
Read Heat Proportional Band (P)	CA 00 01 **71** 00 8D	CA 00 01 **71** 03 qb d1 d2 cs
Read Heat Integral (I)	CA 00 01 **72** 00 8C	CA 00 01 **72** 03 qb d1 d2 cs
Read Heat Derivative (D)	CA 00 01 **73** 00 8B	CA 00 01 **73** 03 qb d1 d2 cs
Read Cool Proportional Band (P)	CA 00 01 **74** 00 8A	CA 00 01 **74** 03 qb d1 d2 cs
Read Cool Integral (I)	CA 00 01 **75** 00 89	CA 00 01 **75** 03 qb d1 d2 cs
Read Cool Derivative (D)	CA 00 01 **76** 00 88	CA 00 01 **76** 03 qb d1 d2 cs
Read Resistivity Value	CA 00 01 **2C** 00 D2	CA 00 01 **2C** 03 qb d1 d2 cs
Read Flow Value	CA 00 01 **30** 00 CE	CA 00 01 **30** 03 qb d1 d2 cs
Read Resistivity Setpoint	CA 00 01 **4C** 00 B8	CA 00 01 **4C** 03 qb d1 d2 cs

command bytes shown in **bold**
qb = qualifier byte
d1,d2 = 16 bit signed integer of the value being sent or received
cs = the checksum of the string (see text)
ed = echo back of the command byte as received
v1,v2 = protocol version
* = limited to the range of the bath
xx = no valid data, include in checksum

Continued on next page.

Table 1 Commands (All bytes are in hex)

FUNCTION	MASTER SENDS	UNIT RESPONDS
SET		
Set Setpoint (control point)*	CA 00 01 **F0** 02 d1 d2 cs	CA 00 01 **F0** 03 qb d1 d2 cs
Set Heat Low Temperature Limit*	CA 00 01 **C0** 02 d1 d2 cs	CA 00 01 **C0** 03 qb d1 d2 cs
Set Heat High Temperature Limit*	CA 00 01 **E0** 02 d1 d2 cs	CA 00 01 **E0** 03 qb d1 d2 cs
Set Low Flow Setpoint	CA 00 01 **B0** 02 d1 d2 cs	CA 00 01 **B0** 03 qb d1 d2 cs
Set Resistivity Setpoint	CA 00 01 **CC** 02 d1 d2 cs	CA 00 01 **CC** 03 qb d1 d2 cs
Set Heat Proportional Band (P=1-99.9)	CA 00 01 **F1** 02 d1 d2 cs	CA 00 01 **F1** 03 qb d1 d2 cs
Set Heat Integral (I = 0-9.99)	CA 00 01 **F2** 02 d1 d2 cs	CA 00 01 **F2** 03 qb d1 d2 cs
Set Heat Derivative (D= 0-5.0)	CA 00 01 **F3** 02 d1 d2 cs	CA 00 01 **F3** 03 qb d1 d2 cs
Set Cool Proportional Band (P=1-99.9)	CA 00 01 **F4** 02 d1 d2 cs	CA 00 01 **F4** 03 qb d1 d2 cs
Set Cool Integral (I = 0-9.99)	CA 00 01 **F5** 02 d1 d2 cs	CA 00 01 **F5** 03 qb d1 d2 cs
Set Cool Derivative (D= 0-5.0)	CA 00 01 **F6** 02 d1 d2 cs	CA 00 01 **F6** 03 qb d1 d2 cs
UNIT ERROR RESPONSES		
Bad Command	N/A	CA 00 01 **0F** 02 01 ed xx cs
Bad Checksum	N/A	CA 00 01 **0F** 02 03 ed xx cs
Bad Data	N/A	CA 00 01 **0F** 02 02 ed xx cs
MISCELLANEOUS		
Request Acknowledge	CA 00 01 **00** 00 FE	CA 00 01 **00** 02 v1 v2 cs

command bytes shown in **bold**
qb = qualifier byte
d1,d2 = 16 bit signed integer of the value being sent or received
cs = the checksum of the string (see text)
ed = echo back of the command byte as received
v1,v2 = protocol version
* = limited to the range of the bath
xx = no valid data, include in checksum

Table 2
QUALIFIER BYTE

00 hex	0 precision, no units of measure
01 hex	0 precesion, °C
02 hex	0 precision, °F
10 hex	0.1 precision, no units of measure
11 hex	0.1 precision, °C units
12 hex	0.1 precision, °F units
13 hex	0.1 precision, LPM
14 hex	0.1 precision, GPM
08 hex	0 precision, MOhm-cm
18 hex	0.1 precision, MOhm-cm
20 hex	0.01 precision, no units of measure

Example: The temperature of 45.6°C would be represented by the qualifier 11 hex, followed by the 2 bytes 01 C8 hex (456 decimal).

WARRANTY

NESLAB Instruments, Inc. warrants for 12 months from date of shipment any NESLAB unit according to the following terms.

Any part of the unit manufactured or supplied by NESLAB and found in the reasonable judgment of NESLAB to be defective in material or workmanship will be repaired at an authorized NESLAB Repair Depot without charge for parts or labor. The unit, including any defective part must be returned to an authorized NESLAB Repair Depot within the warranty period. The expense of returning the unit to the authorized NESLAB Repair Depot for warranty service will be paid for by the buyer. NESLAB's responsibility in respect to warranty claims is limited to performing the required repairs or replacements, and no claim of breach of warranty shall be cause for cancellation or recision of the contract of sales of any unit.

With respect to units that qualify for field service repairs, NESLAB's responsibility is limited to the component parts necessary for the repair and the labor that is required on site to perform the repair. Any travel labor or mileage charges are the financial responsibility of the buyer.

The buyer shall be responsible for any evaluation or warranty service call (including labor charges) if no defects are found with the NESLAB product.

This warranty does not cover any unit that has been subject to misuse, neglect, or accident. This warranty does not apply to any damage to the unit that is the result of improper installation or maintenance, or to any unit that has been operated or maintained in any way contrary to the operating or maintenance instructions specified in NESLAB's Instruction and Operation Manual. This warranty does not cover any unit that has been altered or modified so as to change its intended use.

In addition, this warranty does not extend to repairs made by the use of parts, accessories, or fluids which are either incompatible with the unit or adversely affect its operation, performance, or durability.

NESLAB reserves the right to change or improve the design of any unit without assuming any obligation to modify any unit previously manufactured.

THE FOREGOING EXPRESS WARRANTY IS IN LIEU OF ALL OTHER WARRANTIES, EXPRESSED OR IMPLIED, INCLUDING BUT NOT LIMITED TO WARRANTIES OR MERCHANTABILITY AND FITNESS FOR A PARTICULAR PURPOSE.

NESLAB'S OBLIGATION UNDER THIS WARRANTY IS STRICTLY AND EXCLUSIVELY LIMITED TO THE REPAIR OR REPLACEMENT OF DEFECTIVE COMPONENT PARTS AND NESLAB DOES NOT ASSUME OR AUTHORIZE ANYONE TO ASSUME FOR IT ANY OTHER OBLIGATION.

NESLAB ASSUMES NO RESPONSIBILITY FOR INCIDENTAL, CONSEQUENTIAL, OR OTHER DAMAGES INCLUDING, BUT NOT LIMITED TO LOSS OR DAMAGE TO PROPERTY, LOSS OF PROFITS OR REVENUE, LOSS OF THE UNIT, LOSS OF TIME, OR INCONVENIENCE.

This warranty applies to units sold in the United States. Any units sold elsewhere are warranted by the affiliated marketing company of NESLAB Instruments, Inc. This warranty and all matters arising pursuant to it shall be governed by the law of the State of New Hampshire, United States. All legal actions brought in relation hereto shall be filed in the appropriate state or federal courts in New Hampshire, unless waived by NESLAB.

HX Digital
Recirculating Chiller

NESLAB Manual P/N 002002
Rev. 08/20/97

Installation, Operation, and Maintenance Manual



NESLAB online

Product Service Information, Electronic Catalog,
Applications Notes, MSDS Forms, e-mail.

(603)427-2490

Set modem to 8-N-1 protocol, 1200 - 14400 baud

Voice Info: (800) 4-NESLAB

Comments on this manual can be sent to:

NESLAB@lifesciences.com

or visit our Web page at:

http://www.neslabinc.com

HX Analog/Digital Recirculating Chiller Installation, Operation, and Maintenance Manual

Table of Contents

PREFACE

Compliance 5
Unpacking 5
Warranty 5
After-sale Support 5

SECTION I Safety

Warnings 6

SECTION II General Information

Description 7
Specifications 8
Cooling Capacity 9
Pump Capacity 10

SECTION III Installation

Site (Air-cooled Units) 12
Site (Water-cooled Units) 14
Electrical Requirements 16
Plumbing Requirements 17
Fluids 19
Water Quality Recommendations 20
Filling Requirements 21

SECTION IV Temperature Controllers

Temperature Controllers 22
Refrigeration Control 22
Start Up 22
Digital (Panel mounted) 23
Digital (Remote) 24
Digital with Interlock 25

SECTION V Operation

Flow Control 28
Pressure Gauge 29
Pressure Relief Valve (PD and TU Pumps Only) 29
High Pressure Cutout (Water-Cooled Units Only) 29

SECTION VI
Special Features

Pump Motor Overload Protector 30
Heater Package (Optional) 31
Remote Condenser (Optional) 33
Nitrogen Purge (Optional) 33
Particulate Filter (Optional) 33
15 Pin Accessory Connector (Optional) 34
External Pressure Regulator (Optional) 35
Automatic Refill Device (Optional) 36

SECTION VII
Maintenance

Service Contracts 37
Condenser Cleaning 37
Hoses 37
Algae 37

SECTION VIII
Service

Configuration 38
Reservoir Cleaning 39
Pump Strainer (PD and TU Pumps Only) 40
Flow Filter Strainer 41
Phase Rotation 41
Pump Lubrication 42
Suction Discharge Pressure and Speed Check 43

SECTION IX
Troubleshooting

Checklist 44
Service Assistance 44

SECTION X
Diagrams

Refrigeration Flow (HX-75 through HX-150) 45
Refrigeration Flow (HX-200 through HX-750) 45
Pump Flow (CP Pumps) 46
Pump Flow (PD and TU Pumps) 46
Dimensions 47

APPENDIX A - INTERNATIONAL QUICK REFERENCE GUIDES
APPENDIX B - 380V WYE MODIFICATION

WARRANTY

Water-Cooled HX Series Quick Reference Operating Procedures

Installation
Position the unit in a clean environment with easy access to facility cooling water and a drain. The facility water requirements must meet those specified in the instruction or unit performance will be derated.

Ensure the voltage of the power source meets the specified voltage, ±10%.

The plumbing connections are located on the rear of the unit and are labelled TAP WATER, DRAIN, SUPPLY and RETURN. Remove the plastic protective plugs from all the plumbing connections. Connect the TAP WATER fitting to the facility cooling water and the DRAIN fitting to a drain. Connect the SUPPLY fitting to the inlet of your application and the RETURN fitting to the outlet of your application.

To fill the reservoir open the access panel on the left rear corner of the case top and remove the reservoir cover by unscrewing the thumbscrews. Fill the reservoir to within one inch of the top. If the fluid capacity of your application and recirculation lines are significant, have extra fluid on hand.

Tap water is the recommended fluid for operation from +8°C to +80°C. Below +8°C, a non-freezing fluid must be used. A mixture of tap water and laboratory grade ethylene glycol is suggested.

Operation
Before starting the unit, double check all electrical and plumbing connections. Make sure the circulating system has been filled with cooling fluid.

Ensure the facility water is turned on.

On models HX-200 through HX-750, the unit must be connected to the power source for at least 12 hours to allow the oil to be heated and separated from the refrigerant

To start the unit, place the Power Switch to the ON position. The Cool and Idle LEDs on the front panel indicate the status of the refrigeration system. Cool is on when the unit is removing heat from the cooling fluid, Heat is on when the unit is in the hot gas by-pass mode. As the operating temperature approaches the setpoint, the LEDs cycle.

When the unit is shut off, wait five minutes before restarting to allow time for the refrigeration pressures to equalize. If the pressures are not allowed to equalize, the compressor will short-cycle and no cooling will occur.

Analog Controller Temperature Adjustment
To adjust the temperature setpoint, turn the °C dial on the front of the unit to the desired temperature.

Digital Controller Temperature Adjustment
To display the temperature setpoint, press and hold the DISPLAY switch. To adjust the temperature setpoint, press and hold the DISPLAY switch and turn the ADJUST knob until the desired temperature setpoint is indicated on the digital display. Once the setpoint is adjusted, release the DISPLAY switch. The display will now indicate the temperature of the fluid in the reservoir.

Flow Control
The RECIRCULATING FLOW CONTROL handle controls the flow rate to your application. In the “+” position you receive full flow, the “-” position is no flow.

Periodic Maintenance
Periodically inspect the reservoir fluid. If cleaning is necessary, flush the reservoir with a cleaning fluid compatible with the circulating system and the cooling fluid.

The cooling fluid should be replaced periodically. When operating at low temperatures, the concentration of water in the cooling fluid will increase over time, leading to a loss of cooling capacity.

Periodic vacuuming of the condenser fins is necessary. The frequency of cleaning depends on the operating environment. We recommend avisual inspection of the condenser be made monthly after initial installation. After several months, the cleaning frequency will be established.

Units with PD and TU pumps have a strainer. If debris is in the system, the strainer will prevent the material from being drawn into the pump and damaging the pump vanes.

After initial installation, the strainer may become clogged. The strainer must be cleaned after the first week of installation. After this first cleaning, a monthly visual inspection is recommended. After several months, the frequency of cleaning will be established.

Before cleaning the strainer, disconnect the power cord from the power source and drain the reservoir.

For complete information, including troubleshooting procedures, please refer to the instruction manual.

Air-Cooled HX Series Quick Reference Operating Procedures

Installation
Position the unit so the intake and discharge are not impeded. Inadequate ventilation will cause a reduction in cooling capacity and, in extreme cases, compressor failure.

Avoid excessively dusty areas and institute a periodic cleaning schedule. For proper operation, the unit needs to pull substantial amounts of air through a condenser. A build up of dust or debris on the fins of the condenser will lead to a loss of cooling capacity.

The unit will retain its full rated capacity in ambient temperatures up to approximately +24°C.

Ensure the voltage of the power source meets the specified voltage, ±10%.

The plumbing connections are located on the rear of the unit and are labelled SUPPLY and RETURN. These connections are ¾ inch FPT. Remove the plastic protective plugs from both plumbing connections. Connect the SUPPLY fitting to the inlet of your application. Connect the RETURN fitting to the outlet of your application.

To fill the reservoir open the access panel on the left rear corner of the case top and remove the reservoir cover by unscrewing the thumbscrews. Fill the reservoir to within one inch of the top. If the fluid capacity of your application and recirculation lines are significant, have extra fluid on hand.

Tap water is the recommended fluid for operation from +8°C to +80°C. Below +8°C, a non-freezing fluid must be used. A mixture of tap water and laboratory grade ethylene glycol is suggested.

Operation
Before starting the unit, double check all electrical and plumbing connections. Make sure the circulating system has been filled with cooling fluid.

On models HX-200 through HX-750, the unit must be connected to the power source for at least 12 hours to allow the oil to be heated and separated from the refrigerant

To start the unit, place the Power Switch to the ON position. The Cool and Idle LEDs on the front panel indicate the status of the refrigeration system. Cool is on when the unit is removing heat from the cooling fluid, Heat is on when the unit is in the hot gas by-pass mode. As the operating temperature approaches the setpoint, the LEDs cycle.

When the unit is shut off, wait five minutes before restarting to allow time for the refrigeration pressures to equalize. If the pressures are not allowed to equalize, the compressor will short-cycle and no cooling will occur.

Analog Controller Temperature Adjustment
To adjust the temperature setpoint, turn the °C dial on the front of the unit to the desired temperature.

Digital Controller Temperature Adjustment
To display the temperature setpoint, press and hold the DISPLAY switch. To adjust the temperature setpoint, press and hold the DISPLAY switch and turn the ADJUST knob until the desired temperature setpoint is indicated on the digital display. Once the setpoint is adjusted, release the DISPLAY switch. The display will now indicate the temperature of the fluid in the reservoir.

Flow Control
The RECIRCULATING FLOW CONTROL handle controls the flow rate to your application. In the “+” position you receive full flow, the “-” position is no flow.

Periodic Maintenance
Periodically inspect the reservoir fluid. If cleaning is necessary, flush the reservoir with a cleaning fluid compatible with the circulating system and the cooling fluid.

The cooling fluid should be replaced periodically. When operating at low temperatures, the concentration of water in the cooling fluid will increase over time, leading to a loss of cooling capacity.

Periodic vacuuming of the condenser fins is necessary. The frequency of cleaning depends on the operating environment. We recommend a visual inspection of the condenser be made monthly after initial installation. After several months, the cleaning frequency will be established.

Units with PD and TU pumps have a strainer. If debris is in the system, the strainer will prevent the material from being drawn into the pump and damaging the pump vanes.

After initial installation, the strainer may become clogged. The strainer must be cleaned after the first week of installation. After this first cleaning, a monthly visual inspection is recommended. After several months, the frequency of cleaning will be established.

Before cleaning the strainer, disconnect the power cord from the power source and drain the reservoir.

For complete information, including troubleshooting procedures, please refer to the instruction manual.

Preface

Compliance

Products tested and found to be in compliance with the requirements defined in the EMC standards defined by 89/336/EEC as well as Low Voltage Directive (LVD) 73/23/EEC can be identified by the CE label on the rear of the unit. The testing has demonstrated compliance with the following directives:

LVD, 73/23/EEC	Complies with UL 3101-1:93
EMC, 89/336/EEC	EN 55011, Class A Verification
	EN 50082-1:1992
	IEC 1000-4-2:1995
	IEC 1000-4-3:1994
	IEC 1000-4-4:1995

For any additional information refer to the Letter of Compliance that shipped with the unit (Declaration of Conformity).

Unpacking

Retain all cartons and packing material until the unit is operated and found to be in good condition.

On units with a remote control box, the box is packed in a separate carton. Be sure to locate this separate carton; do not dispose of it by mistake.

If the unit shows external or internal damage, or does not operate properly, contact the transportation company and file a damage claim. Under ICC regulations, this is your responsibility.

Warranty

The unit has a warranty against defective parts and workmanship for one full year from date of shipment. Refer to the last page of this manual for complete warranty details.

After-sale Support

NESLAB is committed to customer service both during and after the sale. If you have questions concerning the operation of your unit or the information in this manual, contact our Sales Department. If your unit fails to operate properly or if you have questions concerning spare parts or Service Contracts, contact our Service Department.

Before calling, please refer to the serial number label on the rear of the case top to obtain the following information (see Section II, Description for the serial number label location):

- BOM number _____

- Serial number _____

Section I Safety

Warnings

Make sure you read and understand all instructions and safety precautions listed in this manual before installing or operating your unit. If you have any questions concerning the operation of your unit or the information in this manual, contact our Sales Department for assistance (see Preface, After-sale Support).

Performance of installation, operation, or maintenance procedures other than those described in this manual may result in a hazardous situation and may void the manufacturer's warranty.

Transport the unit with care. Sudden jolts or drops can damage the refrigeration lines.

Do not attempt to defeat any of the interlock switches or safety features built into the unit.

Observe all warning labels.

Never remove warning label.

Never operate damaged or leaking equipment.

Never operate the unit without cooling fluid in the fluid reservoir.

Make sure the unit is off before connecting or disconnecting the power cord or other cables.

Always turn off the unit and disconnect the power cord from the power source before performing any service or maintenance procedures, or before moving the unit.

Always empty the fluid reservoir before moving the unit.

Never operate equipment with damaged power cords.

Refer service and repairs to a qualified NESLAB technician.



In addition to the safety warnings listed above, warnings are posted throughout the manual. These warnings are designated by an exclamation mark inside an equilateral triangle with text highlighted in bold. Read and follow these important instructions. Failure to observe these instructions can result in permanent damage to the unit, significant property damage, or personal injury or death.

Section II General Information

Description

The HX Series Recirculating Chiller is designed to provide a continuous flow of cooling fluid at a constant temperature and volume.

The unit consists of an air-cooled or water-cooled refrigeration system, a fluid reservoir, a fluid recirculation pump, and a temperature controller.

HX units are available with a large number of options. This manual explains how to install, operate, and maintain a “standard” HX unit. This manual also explains some of the available options. Supplemental manuals are supplied with units equipped with options not covered in this manual.

Throughout the manual, you will be asked to consult the unit’s serial number label, or the pump identification label, or both, for specific information. The labels are located on the rear of the case top.

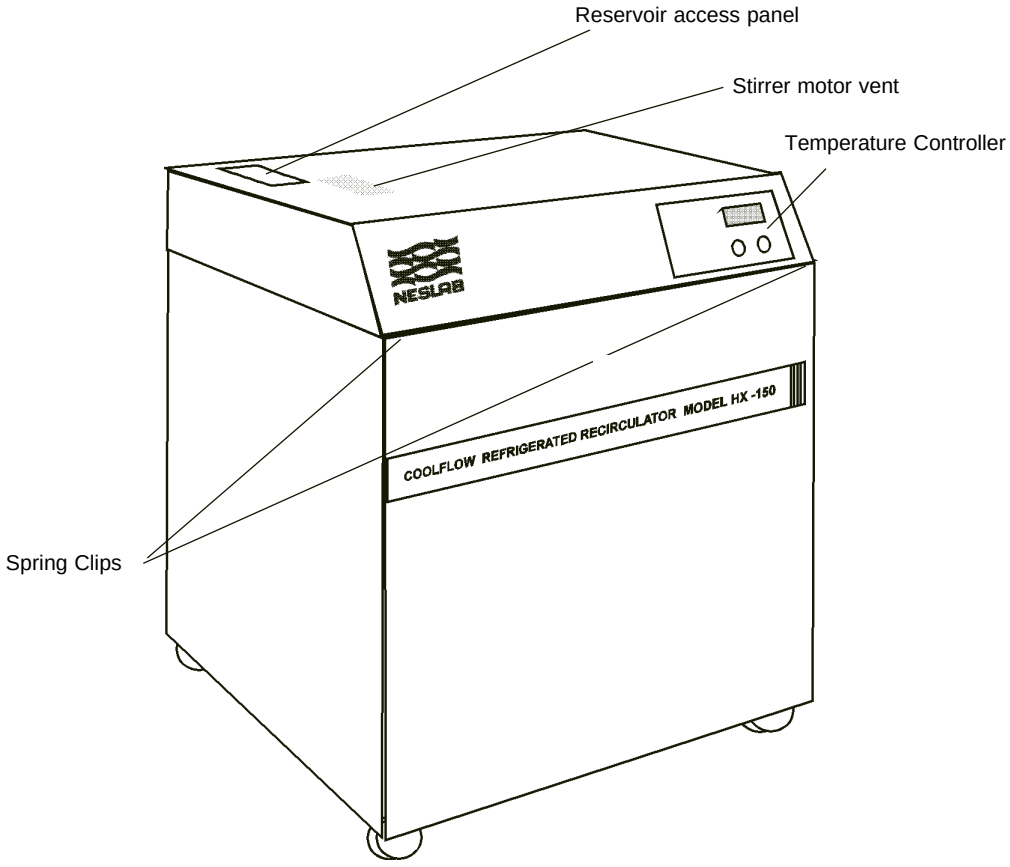

Specifications

	HX-75	HX-100	HX-150
Temperature Range	+5°C to +35°C		
Temperature Stability	±0.1°C		
Unit Dimensions[1] (H x W x D) *Inches* *Centimeters*	35 ¾ x 23 ¼ x 18 ¾ 90.8 x 59.0 x 47.6	39 5/8 x 26 ¼ x 21 1/8 100.6 x 66.6 x 53.6	
Reservoir Volume *Gallons* *Liters*	5.0 19.0	8.0 30.3	
Shipping Weight *Pounds* *Kilograms*	261 118	300 136	320 145

	HX-200	HX-300	HX-500	HX-750
Temperature Range	+5°C to +35°C			
Temperature Stability	±0.1°C			
Unit Dimensions[1,2] (H x W x D) *Inches* *Centimeters*	45 7/8 x 33 ¾ x 25 ¼ 116.5 x 85.7 x 64.1		50 5/8 x 46 x 28 ¾ 128.3 x 116.8 x 73.0	63 ¾ x 46 x 29 162.0 x 116.8 x 73.6
Reservoir Volume *Gallons* *Liters*	15.0 56.8		28.0 106.0	40.0 151.0
Shipping Weight *Pounds* *Kilograms*	471 214	531 241	746 338	971 440

1. For additional dimensions see page 47.
2. HX-750 with a water-cooled refrigeration system has the same dimensions as the HX-500.

Cooling Capacity

Cooling capacity will vary depending on fluid temperature, ambient temperature, and cooling fluid.

Cooling capacities for models HX-75 through HX-750 were obtained under the following conditions:

1. *air-cooled unit operating at +20°C (+68°F) ambient temperature.*
2. *cooling fluid with specific heat of 1.0 was used for fluid temperatures from +5°C to +35°C.*

HX-75, 100, & 150

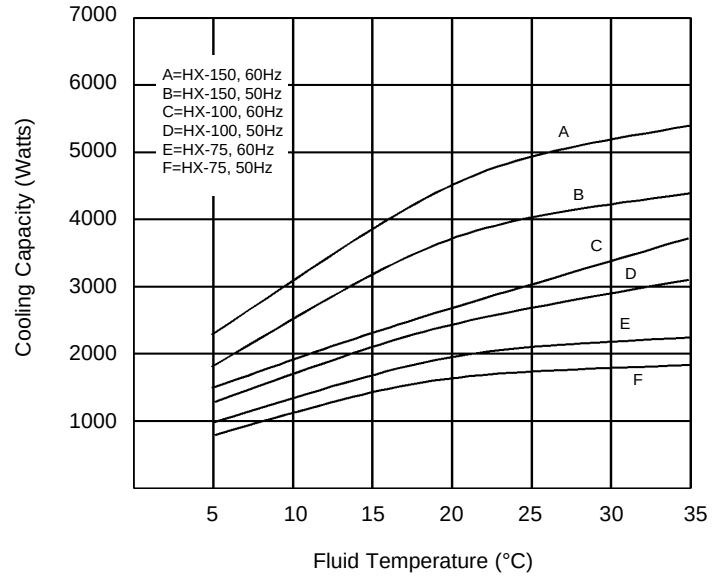

HX-200 & 300

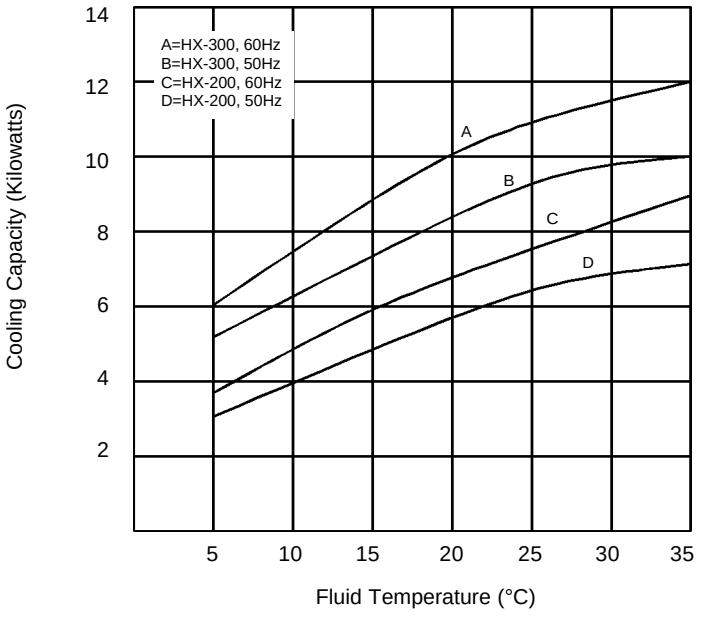

HX-500 & 750

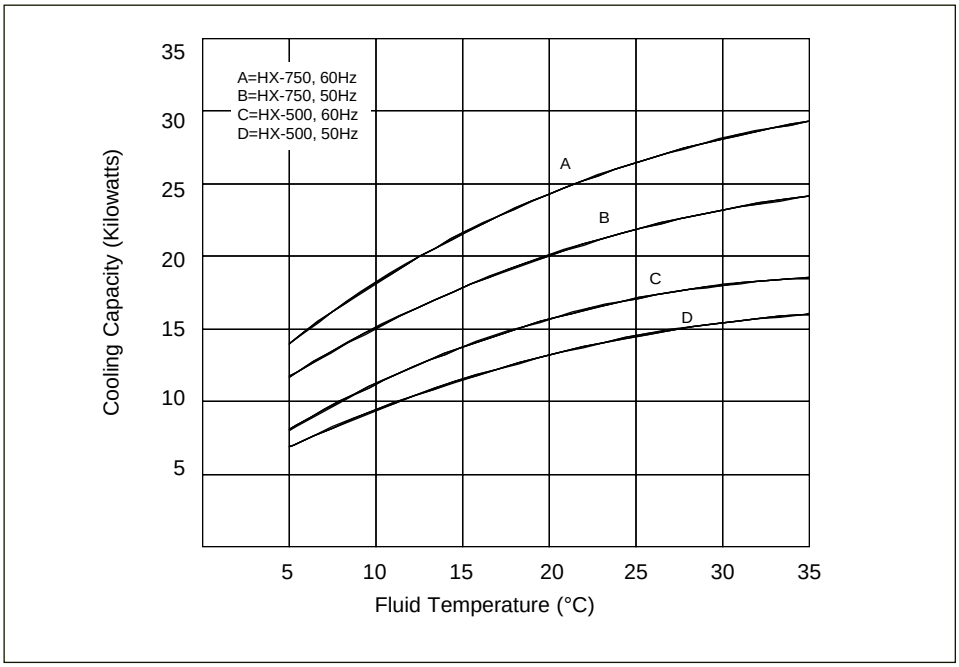

Pump Capacity

HX units are available with one of three standard pump types: positive displacement (PD), centrifugal (CP), and turbine (TU). Refer to the pump identification label on the rear of the case top or rear of analog temperature controller to identify the specific pump in your unit.

PD2 & TU1

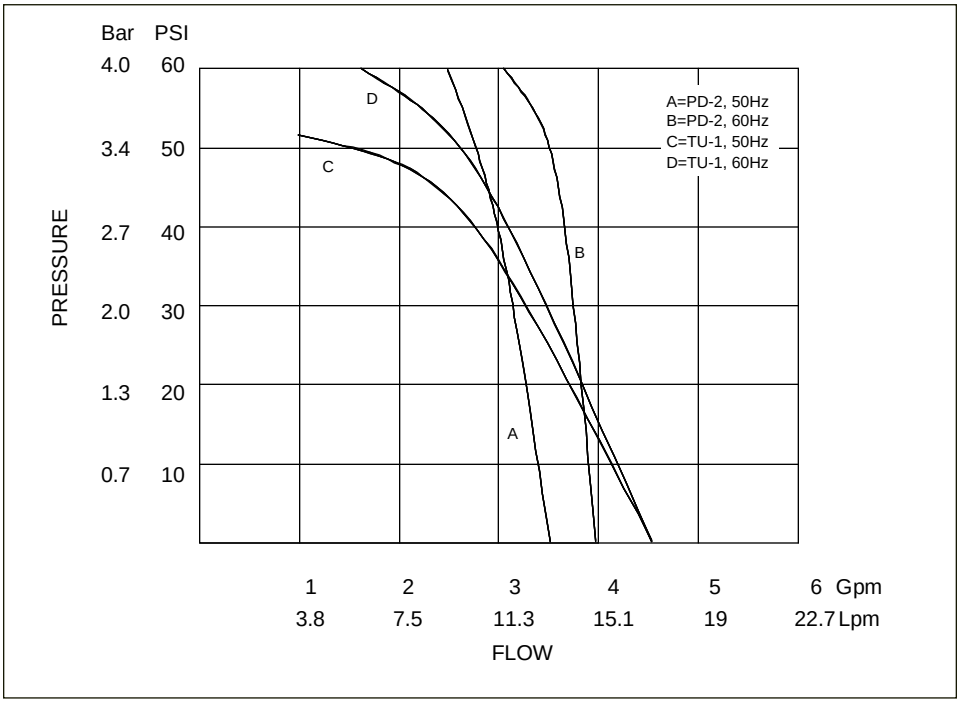

CP

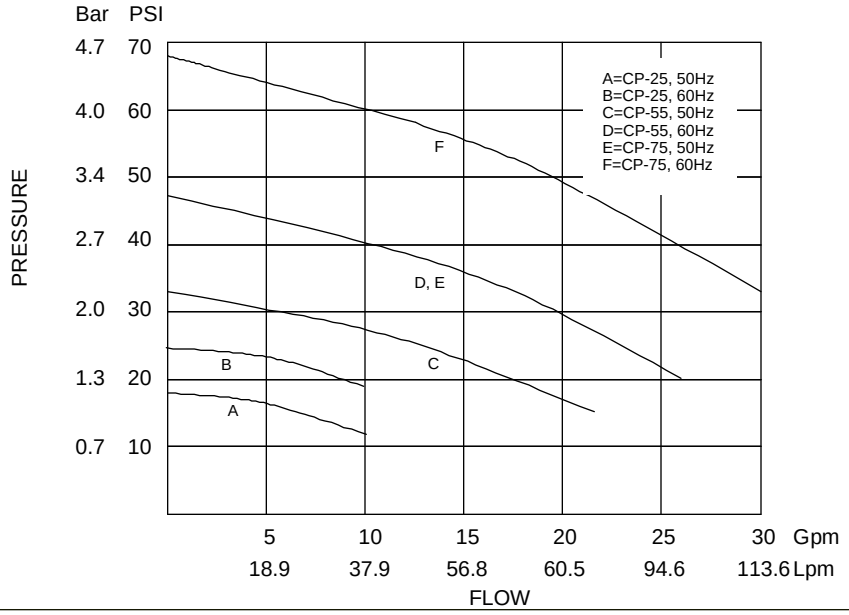

TU-3, 5 & 6

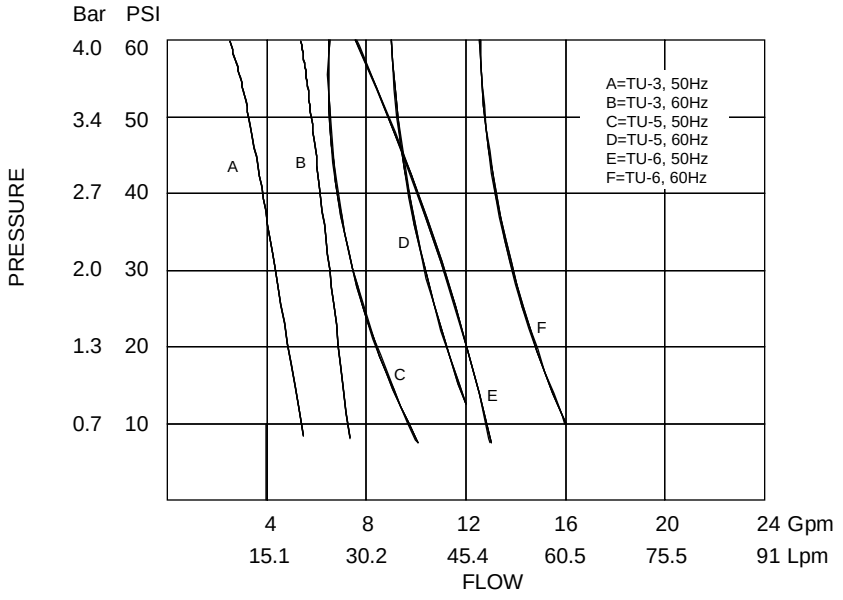

TU-7, 8 & 9

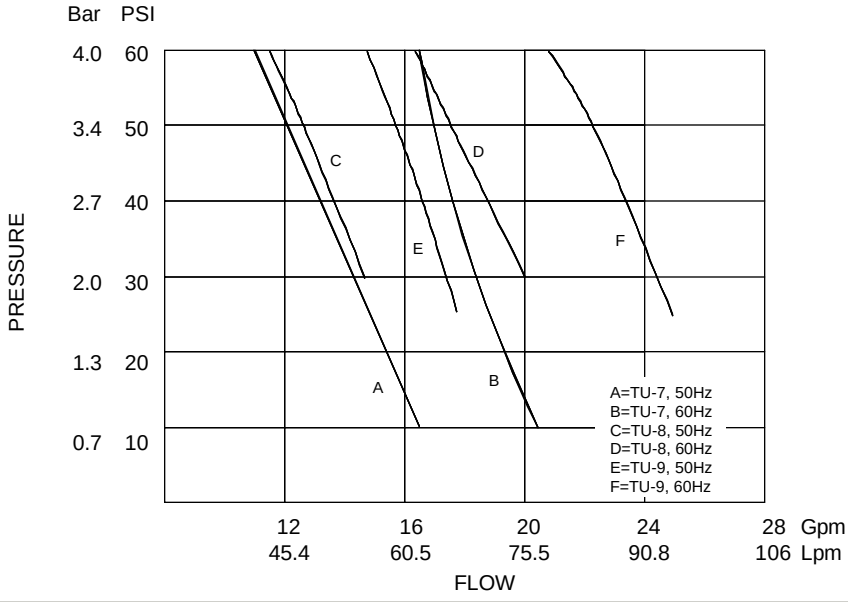

Section III Installation

Site (Air-cooled Units)

The unit should be located in a laboratory or clean industrial environment where ambient temperatures are inside the range of +55°F to +95°F (+13°C to +35°C).

The unit will retain its full rated capacity in ambient temperatures to approximately +75°F (+24°C). Above +75°F, derate the cooling capacity 1% for every 1°F above +75°F, to a maximum ambient temperature of +95°F. In degrees Celsius, derate the cooling capacity 1% for every 0.5°C above +24°C, to a maximum ambient temperature of +35°C.



Never place the unit in a location where excessive heat, moisture, or corrosive materials are present.

The unit has an air-cooled refrigeration system. It must be positioned so the air intake and discharge are not impeded.

On models HX-75 through HX-150, air is drawn through the left side of the unit and discharged through the right and rear. A minimum clearance of 2 feet (0.6 meter) on these three sides is necessary for adequate ventilation.

On models HX-200 — HX-750, air is drawn through the front of the unit and discharged through the side and rear. A minimum of 5 feet (1.5 meters) on all four sides of the unit is necessary for adequate ventilation.

In some applications where space is at a premium, the minimum ventilation clearance can be compromised. However, consult our Sales Department before positioning the unit in a location with less minimum clearance than listed above. Inadequate ventilation will cause a reduction in cooling capacity and, in extreme cases, compressor failure.

Excessively dusty areas should be avoided and a periodic cleaning schedule should be instituted (see Section VII, Condenser Cleaning).

On digital models HX-100 through HX-750 the stirrer motor is located under the case top. (Models HX-500 and HX-750 have two stirrer motors.) Heat generated by the stirrer motor is discharged through vents in the case top. Do not block the vents. A minimum clearance of 2 inches (5 centimeters) is necessary for adequate ventilation.

NOTE: Units with plate heat exchangers do not have stirrer motors.

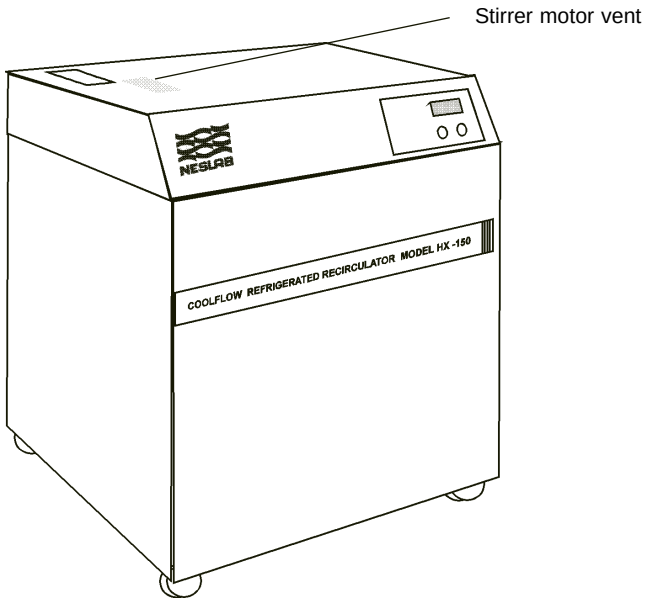

Refer to the table below to determine the approximate amount of air intake required for the unit to retain its full rated capacity. If the air intake does not meet these standards, cooling capacity will be derated.

	HX-75	HX-100	HX-150	HX-200
Air Intake				
Cubic feet per minute	600	710	1050	2000
Liters per minute	17000	20100	29730	56640

	HX-300	HX-500	HX-750
Air Intake			
Cubic feet per minute	1900	5000	5600
Liters per minute	53800	141750	158800

Site (Water-cooled units)

The unit should be located in a laboratory or clean industrial environment with easy access to a facility cooling water supply and a drain.

All units are equipped with castors for easy movement. This allows the unit to be placed in a small area, as long as there is ample space for the unit to be moved for access on all four sides. A minimum access clearance of 3 feet (1 meter) on two adjacent sides is recommended.

The facility cooling water supply must meet or exceed the requirements listed in the table shown on the next page for the unit to operate at its full rated capacity. If the facility cooling water does not meet these standards, the cooling capacity will be derated.

As the temperature of the cooling water supply increases, the required flow rate and pressure of the cooling water supply increases.

For example, with a model HX-150, if the temperature of the cooling water supply is +65°F, the flow rate must be at least 1.5 gallons per minute, with a pressure differential of at least 3.5 PSI. However, if the temperature of the cooling water supply is +85°F, the flow rate must be at least 4.0 gallons per minute, with a pressure differential of at least 10 PSI.

If the unit is being used with a building water supply, the back pressure of the drain must be less than the supply pressure.

A water regulating valve, located in the TAP WATER line, regulates the flow rate of the cooling water supply as it enters the unit. The valve regulates the flow rate based on the heat load. Flow through the unit stops automatically when the unit is shut off.

On digital models HX-100 through HX-750 the stirrer motor is located under the case top. (Models HX-500 and HX-750 have two stirrer motors.) Heat generated by the stirrer motor is discharged through vents in the case top. Do not block the vents. A minimum clearance of 2 inches (5 centimeters) is necessary for adequate ventilation. See illustration on previous page.

NOTE: Units with plate heat exchangers do not have stirrer motors.

	Temperature of cooling water supply			
	+55°F (+13°C)	**+65°F (+18°C)**	**+75°F (+24°C)**	**+85°F (+29°C)**
HX-75				
Flow Rate				
Gallons per minute	0.7*	1.0	1.5	3.0
Liters per minute	2.8*	3.7	5.7	11.4
Pressure Drop				
PSI	1.5*	2.0	3.5	8.0
Bar	0.10*	0.13	0.24	0.55
HX-100				
Flow Rate				
Gallons per minute	1.0*	1.5	2.0	3.5
Liters per minute	3.7*	5.7	7.6	13.2
Pressure Drop				
PSI	2.0*	3.5	5.0	10.0
Bar	0.13*	0.24	0.34	0.69
HX-150				
Flow Rate				
Gallons per minute	1.0*	1.5	2.5	4.0
Liters per minute	3.7*	5.7	9.5	15.1
Pressure Drop				
PSI	2.0*	3.5	6.0	10.0
Bar	0.13*	0.24	0.41	0.69
HX-200				
Flow Rate				
Gallons per minute	1.8*	2.5	3.5	6.0
Liters per minute	6.8*	9.5	13.2	22.7
Pressure Drop				
PSI	5.0*	6.0	7.0	18.0
Bar	0.34*	0.41	0.48	1.24
HX-300				
Flow Rate				
Gallons per minute	2.5*	4.0	6.5	11.0
Liters per minute	9.5*	15.1	24.6	41.6
Pressure Drop				
PSI	6.0*	8.0	13.5	25.0
Bar	0.41*	0.55	0.93	1.72
HX-500				
Flow Rate				
Gallons per minute	3.5	5.0	8.0	16.0
Liters per minute	13.2	18.9	30.3	60.6
Pressure Drop				
PSI	13.0	17.0	23.0	57.0
Bar	0.89	1.17	1.58	3.93
HX-750				
Flow Rate				
Gallons per minute	6.0	8.0	12.5	16.6
Liters per minute	22.7	30.3	47.3	62.8
Pressure Drop				
PSI	14.0	20.0	28.5	40.0
Bar	0.96	1.38	1.96	2.76

*Estimated values

Electrical Requirements

Refer to the table below to determine electrical requirements of your unit. Verify the requirements by reviewing the ratings listed on the serial number label on the rear of the case top or rear of analog temperature controller.

	HX-75	HX-100	HX-150
Volts		208/230 220/240	
Hertz		60 50	
Phase		1 1	
Plug		NEMA L6-30P or L6-20P	

	HX-200	HX-300	Hx-500	HX-750
Volts	208/230 200/220 380/420		208/230	380/420
Hertz	60 50 50		60	50
Phase	3 3 3		3	3
Plug	NEMA L15-30P or L16-20P		N/A	

Make sure the voltage of the power source agrees with the unit's voltage and frequency rating. The unit is designed to tolerate deviations of ±10% from the rated line voltage.

Models HX-75 through HX-300 have an 8 foot (2.4 meter) power cord installed on the unit at the time of shipment.

NOTE: Custom units equipped with heaters may not have a power cord. See Section VI, Special Features.

NOTE: 380V WYE connections are shown in Appendix B.

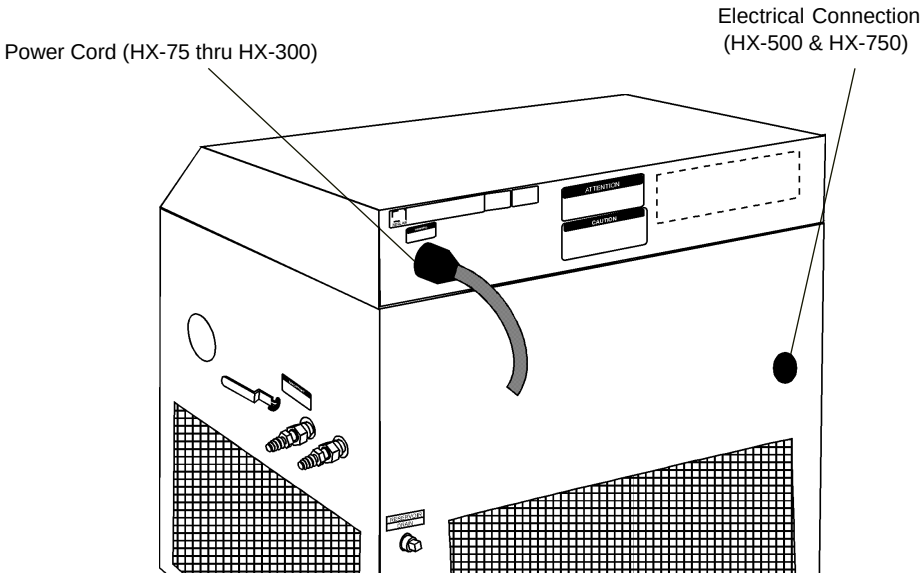



The unit construction provides extra protection against the risk of electric shock by grounding appropriate metal parts. The extra protection may not function unless the power cord is connected to a properly grounded outlet. It is the user's responsibility to assure a proper ground connection is provided.

Models HX-500 and HX-750 are not equipped with a power cable. Installation of the cable is the user's responsibility. Wire the unit in conformance to local, state, and federal electrical codes. Double check all wiring to make sure it is properly connected and protected from the elements.

Models HX-200 through HX-750 are equipped with a compressor crankcase heater. The crankcase heater warms the oil in the compressor and prevents refrigerant from mixing with the oil. Before start up, the unit must be connected to its power source for at least 12 hours. This allows time for the oil to be heated and separate from the refrigerant.

Plumbing Requirements

Air-cooled and water-cooled units

Before installing the unit to an instrument that previously used tap water as a cooling fluid, flush the instrument several times to remove any rust or scale that has built up. Consult the manufacturer of the instrument for a cleaning fluid recommendation.

The plumbing fittings used to connect the HX to the instrument being cooled are located on the right side of the unit (labelled SUPPLY and RETURN). These connections are ¾ inch FPT.

Remove the protective plugs from the SUPPLY and RETURN connections. Connect the SUPPLY fitting to the inlet of the instrument being cooled. Connect the RETURN fitting to the outlet of the instrument being cooled.

The RESERVOIR DRAIN connection on the rear of the unit is a ½ inch FPT fitting connected internally to the unit's fluid reservoir. This fitting provides a means for draining the reservoir. The unit is shipped with a ½ inch MPT plug installed in this fitting. Remove the plug to drain the reservoir.

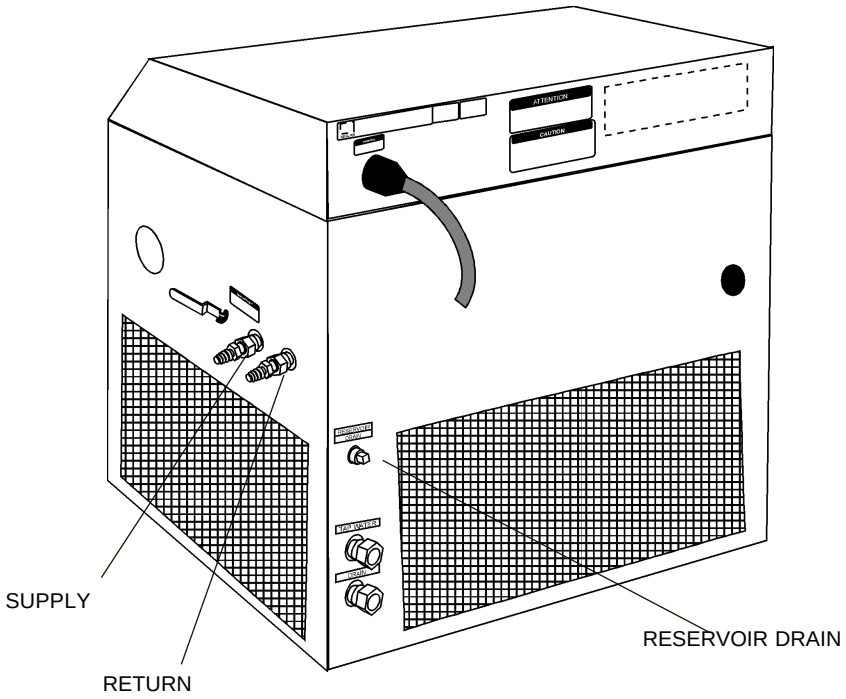

Two plumbing adapters (¾ inch MPT x 5/8 inch hose) are included with the unit. If the unit is being plumbed to the instrument being cooled using flexible tubing, install the adapters in the SUPPLY and RETURN plumbing ports. To prevent leaking, wrap the threads of the adapters with Teflon® sealing tape before installing them in the plumbing ports. The adapters will accept ½ or 5/8 inch ID flexible tubing.

If the unit is "hard plumbed" to the instrument being cooled or to the cooling water supply, damage can occur if the unit is bumped or jolted from its site. Provisions should be made to prevent the unit from being moved after installation. Once the unit is plumbed, secure the locking castors on the unit's base. If the unit is located in a heavy traffic area where the possibility of collision is imminent, it may be necessary to secure the unit to the site using blocks or mounting brackets.

Flexible tubing, if used, should be heavy wall or reinforced construction. All tubing should be rated to withstand 110 psi at +35°C. Make sure all tubing connections are securely clamped. Avoid running tubing near radiators, hot water pipes, etc. If substantial lengths of tubing are necessary, insulation may be required to prevent loss of cooling capacity.

Tubing and insulation are available from NESLAB. Contact our Sales Department for more information (see Preface, After-sale Support).

It is important to keep the distance between the unit and the instrument being cooled as short as possible, and to use the largest diameter tubing practical. Tubing should be straight and without bends. If diameter

reductions must be made, they should be made at the inlet and outlet of the instrument being cooled, not at the HX.

If substantial lengths of connecting tubing are required, they should be pre-filled with cooling fluid before connecting them to the unit.

Water-cooled units
The plumbing connections used to connect the water-cooled condenser in the HX to the facility cooling water supply are located at the rear of the unit (labelled TAP WATER and DRAIN). On models HX-75 through HX-300, these fittings are ½ inch FPT. On models HX-500 and HX-750, these fittings are 1 inch FPT.

Remove the plastic protective plugs from the TAP WATER and DRAIN connections. Connect the TAP WATER fitting to the facility cooling water supply. Connect the DRAIN fitting to a drain.

Fluids

The selected cooling fluid must have a viscosity of 50 centistokes or less at the lowest operating temperature.



If your unit is equipped with a plate heat exchanger, do not use 100% water as a recirculating fluid. Due to the physical nature of a plate heat exchanger, and its response to temperature changes, using 100% water may cause the plate heat exchanger to rupture.



Never use flammable or corrosive fluids with this unit. Distilled and deionized water may be aggressive and cause material corrosion. Please contact NESLAB before subjecting this unit to prolonged exposure to distilled or deionized water.

Tap water is the recommended fluid for operation from +8°C to +35°C.

Below +8°C, a non-freezing solution is required. A 50/50 mixture, by volume, of water and laboratory grade ethylene glycol is suggested.



Do not use automobile anti-freeze. Commercial anti-freeze contains silicates that can damage the pump seals. Use of automobile anti-freeze will void the manufacturer's warranty.

For units with extended temperature ranges above +35°C, tap water is the recommended fluid up to +80°C. Above +80°C, the user is responsible for the fluid(s) used.

Water Quality Recommendations

Unfavorably high total ionized solids (TIS) can accelerate the rate of galvanic corrosion. These contaminants can function as electrolytes which increase the potential for galvanic cell corrosion and lead to localized corrosion such as pitting which can be observed at the studs and on the outside surface of cooling coils. Eventually, the pitting will become so extensive that the coil will leak refrigerant into the water reservoir.

As an example, raw water in the United States averages 171 ppm (as NaCl). The recommended level for use in a water system is between 0.5 to 5.0 ppm (as NaCl).

Recommendation: Initially fill the tank with distilled/deionized water. Do not use untreated tap water as the total ionized solids level may be too high.

Maintain this water quality at a resistivity of between 1 to 10 megohm-cm (compensated at 25°C) by using a purification system. Although the initial fill may be as high as 10 megohm-cm (compensated at 25°C), the desired level for long time usage is 1 to 3 megohm-cm (compensated at 25°C).

The above two recommendations will reduce the electrolytic potential of the water and prevent or reduce the galvanic corrosion observed.

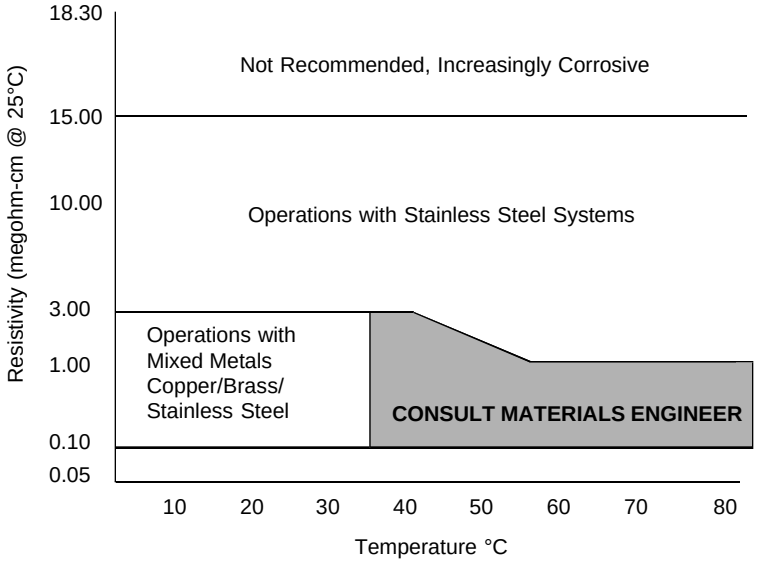

Water Quality Considerations

Filling Requirements

The reservoir access panel is located at the left rear corner of the case top, below an access panel. To open the access panel, slide the latch back (towards the rear of the unit) and lift.

Loosen the thumbscrews and remove the reservoir cover.

Fill the fluid reservoir with cooling fluid to within 1 inch of the top.

The fluid capacity of the instrument being cooled and the recirculation lines may be significant. To prevent the lowering of the fluid level in the reservoir below the operating level, have extra cooling fluid on hand to keep the reservoir filled to within 1 inch of the top.

When the recirculating system is full, replace the reservoir cover. Close the access panel.

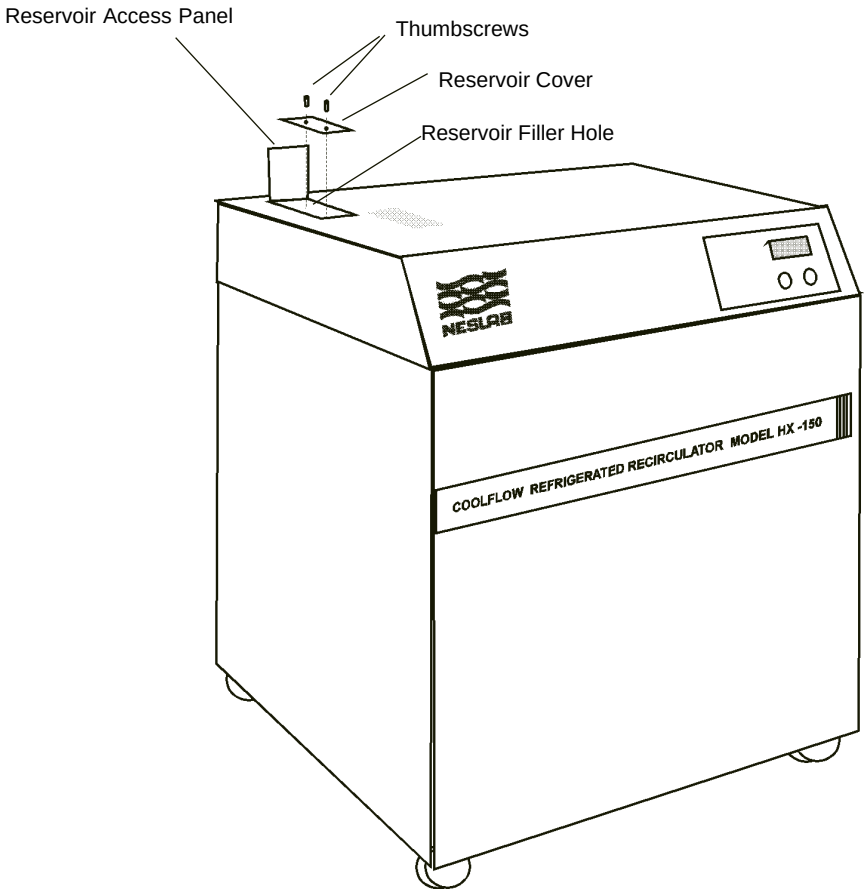

Section IV Temperature Controllers

Temperature Controllers

The standard temperature controllers available with HX units are: Digital (Panel mounted or Remote) and Digital with Interlock. This section explains the installation (if applicable) and operation of the controllers.

Refrigeration Control

On “standard” units, the refrigeration compressor runs continuously, unless the fluid temperature exceeds +40°C. However, on some “custom” units equipped with an extended temperature range, the compressor may operate at higher temperatures. A hot gas by-pass system is used to maintain constant temperature in all units.

The Idle and Cool indicators, located on the control panel, indicate the status of the refrigeration system. The Idle indicator is lit when the unit is in the hot gas by-pass mode. The Cool indicator is lit when the refrigeration system is removing heat from the cooling fluid. As the fluid temperature approaches the temperature setpoint, the indicators cycle on and off to indicate the duty cycle of the system. The unit can be in Cool or Idle, but never both at the same time. A balance between Cool and Idle controls the temperature.

Start Up

Before starting, check all electrical and plumbing connections and make sure the recirculating system (the HX, your application, and the recirculation lines) has been properly filled with cooling fluid. Also, make sure the flow control valve is fully closed (see Section V, Flow Control). For CE Mark units ensure the circuit breaker on the right hand side of the unit is on.

For water-cooled units — ensure that the facilty water is turned on.

Models HX-200 through HX-750 are equipped with a compressor crankcase heater. The crankcase heater warms the oil in the compressor and prevents refrigerant from mixing with the oil. Before start up, the unit must be connected to its power source for at least 12 hours. This allows time for the oil to be heated and separate from the refrigerant.

To start the unit, place the Power On/Off switch in the On position. The pump and refrigeration system will start. The Temp°C display will indicate the reservoir fluid temperature. After starting recheck the fluid level, a "top off" may be needed. To shut the unit off, place the Power On/Off switch in the Off position.

When the unit is shut off, wait approximately five minutes before restarting. This allows time for the refrigeration pressures to equalize. If the pressures are not allowed to equalize, the compressor will short-cycle (clicking sound) and no cooling will occur.

Digital
(Panel mounted)

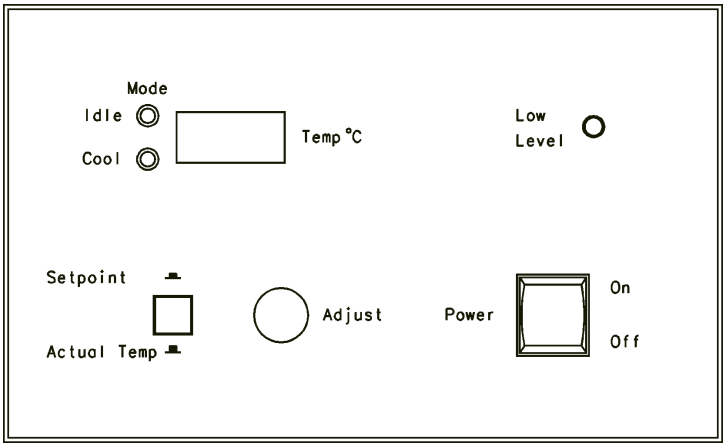

Digital Temperature Controller

Temperature Adjustment

To display the temperature setpoint, press and hold the Setpoint/Actual Temp button. To adjust the setpoint, press and hold the Setpoint/Actual Temp button and turn the Adjust dial until the desired temperature setpoint is indicated on the Temp°C LED display. Once the setpoint is adjusted, release the Setpoint/Actual Temp button. The Temp°C LED display will indicate the temperature of the fluid in the reservoir.

NOTE: Inadvertent movement of the Adjust dial will result in a change in the setpoint. The change will not be immediately reflected on the Temp°C display unless the Setpoint/Actual Temp button is pressed. The display will eventually change as the unit responds to the new setpoint

Low Level Warning

The Low Level indicator is connected to a float switch in the reservoir. The indicator warns the user of a low cooling fluid level in the reservoir. A low fluid level condition occurs when the cooling fluid in the reservoir drops below the operating level. The indicator serves only as a warning. The unit will not shut down as a result of a low fluid level condition.

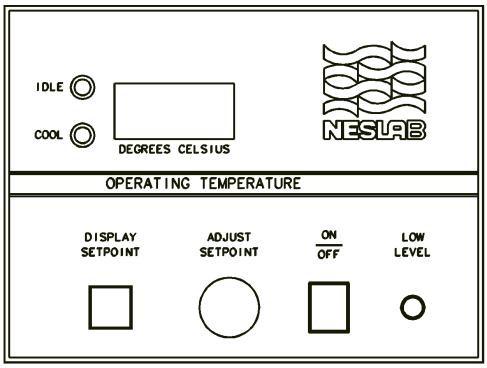

Digital Temperature Controller
(remote)

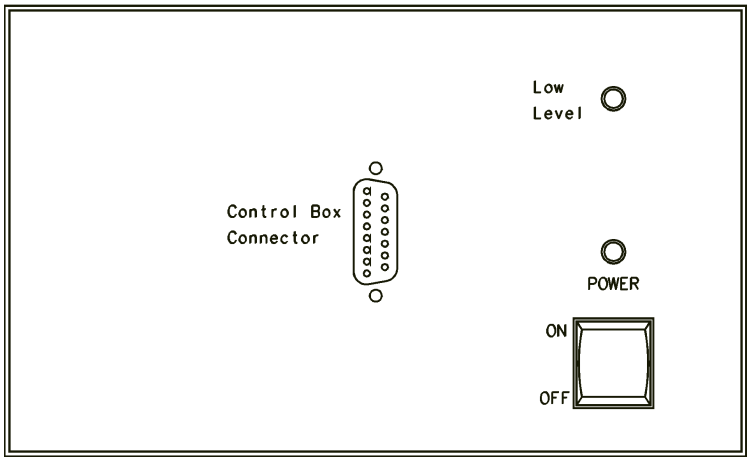

Digital Temperature Controller

Installation

Controller dimensions are 4¾" x 7¾" x 3¾" (H x W x D).

Connect the Digital remote box to the unit by securing the connector on the remote box's cable to the Control Box Connector receptacle on the operator panel on the front of the case top.

Start Up

To start the unit, place the ON/OFF switch on the operator panel of the unit in the ON position and press the ON/OFF button on the remote box. The pump and refrigeration system will start, the POWER indicator on the operator panel will light and the DEGREES CELSIUS display on the remote box will indicate the fluid temperature. Either ON/OFF switch will shut the unit off.

Temperature Adjustment

To display the temperature setpoint, press and hold the DISPLAY/SETPOINT button. To adjust the setpoint, press and hold the DISPLAY/SETPOINT button and turn the ADJUST SETPOINT dial until the desired temperature setpoint is indicated on the DEGREES CELSIUS LED display. Once the setpoint is adjusted, release the DISPLAY/SETPOINT button. The DEGREES CELSIUS LED display will indicate the temperature of the fluid in the reservoir.

NOTE: Inadvertent movement of the ADJUST SETPOINT dial will result in a change in the setpoint. The change will not be immediately reflected on the DEGREES CELSIUS display unless the DISPLAY/SETPOINT button is pressed. The display will eventually change as the unit responds to the new setpoint.

Low Level Warning

The LOW LEVEL indicator is connected to a float switch in the reservoir. The indicator warns the user of a low cooling fluid level in the reservoir. A low fluid level condition occurs when the cooling fluid in the reservoir drops below the operating level. The indicator serves only as a warning. The unit will not shut down as a result of a low fluid level condition.

Digital with Interlock

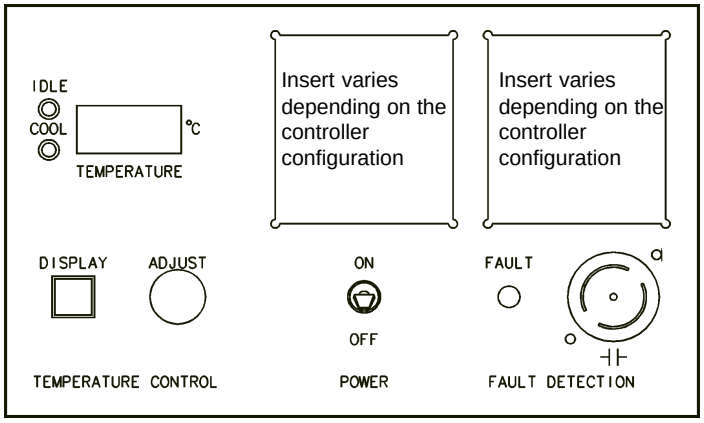

Digital with Interlock Temperature Controller

Description

The Digital with Interlock temperature controller is a Digital temperature controller with up to four monitoring options: low temperature, high temperature, low fluid level, and low flow. The controller can be built with any combination of these four monitors.

Temperature Adjustment

To display the temperature setpoint, press and hold the DISPLAY button. To adjust the temperature setpoint, press and hold the DISPLAY button and turn the ADJUST dial until the desired temperature setpoint is indicated on the TEMPERATURE °C LED display. Once the setpoint is adjusted, release the DISPLAY button. The TEMPERATURE °C display will indicate the temperature of the fluid in the reservoir.

NOTE: Inadvertent movement of the ADJUST dial will result in a change in the setpoint. The change will not be immediately reflected on the TEMPERATURE °C display unless the DISPLAY button is pressed. The display will eventually change as the unit responds to the new setpoint.

Fault Response

Controllers with a START switch are configured to shut off in the event that a fault occurs. Controllers NOT equipped with a START switch will allow the unit to continue to operate if a fault occurs. This option is available for customers who are willing to accept the risk of damage to the unit in order to continue to provide cooling fluid to the instrument being cooled.

With either controller configuration, the relay contacts connected to the controller receptacle will open and the FAULT indicator will light if a fault occurs. The cause of the fault must be identified and corrected before the unit can be restarted.

START Switch

If the controller is equipped with a START switch, a fault will cause the unit to shut down. Press the START switch to restart the unit after the fault has been corrected. If the fault has not been corrected, the unit will not start and the FAULT indicator will light when the START switch is pressed.

Temperature Monitors

The optional high and low temperature monitors are connected to sensors that monitor the temperature of the cooling fluid as it exits the reservoir. The monitors protect the system from exposure to excessively hot or cold cooling fluid. A temperature fault occurs when the fluid temperature exceeds the set temperature limit.

To adjust either temperature monitor, turn the appropriate calibrated dial to the desired temperature limit.

Low Fluid Level Monitor

The low fluid level monitor is connected to a float switch in the reservoir. If the controller is equipped with a LOW LEVEL indicator, the low level monitor is not connected to the fault circuit. The indicator will light if the reservoir cooling fluid drops below the operating level. The indicator serves only as a warning. A fault will not occur as a result of a low level condition.

If the controller is NOT equipped with a LOW LEVEL indicator, the low level monitor is connected to the fault current. A fault will occur if the reservoir cooling fluid level drops below the operating level.

Low Flow Monitor

The optional low flow monitor is connected to a flow switch in the RETURN line. A low flow fault occurs when the flow rate of the returning cooling fluid drops below 0.3 gallons per minute (1.0 liters per minute).

When starting a unit with a controller equipped with both a low flow monitor and a START switch, the START switch must be held in the ON position until the flow switch “closes” (2 or 3 seconds). If time is not allowed for the flow switch to close, the unit will stop when the START switch is released.

Interlock Relay Contacts

A set of contacts are connected to a receptacle on the operator panel. The contacts are rated 15A, 125V. This is not a power inlet or outlet. The receptacle is isolated from the circuitry. Its ground pin is connected to the chassis. The contacts are normally open: they are closed when the unit is running normally (no faults present), and they are open when the unit is off or when a fault occurs.

Section V Operation

Flow Control

The flow control handle is connected to a valve that controls the flow rate of the cooling fluid to the instrument being cooled. The handle is located on the right side of the unit and is labelled RECIRCULATING FLOW CONTROL.

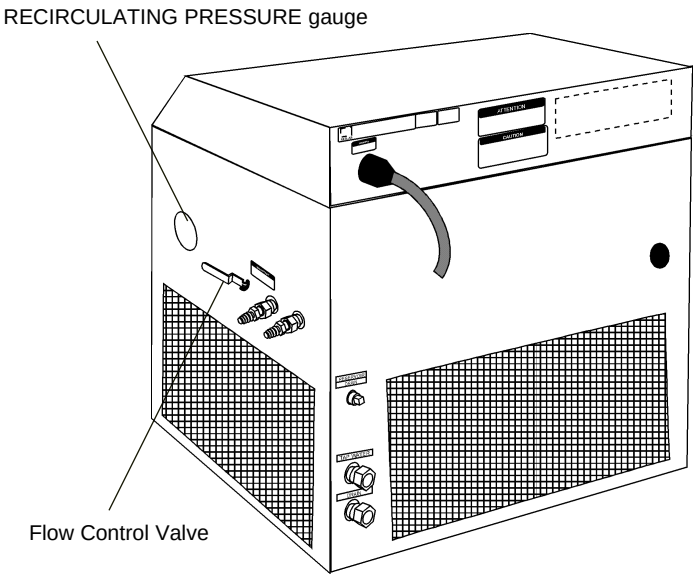

When the handle is in the “+” position, the valve is open and all possible cooling fluid is supplied to the instrument being cooled. When the handle is in the “-” position, the valve is closed and no cooling fluid is supplied to the instrument being cooled. When the handle is between these two positions, the flow rate of the cooling fluid is between full flow and no flow. Use a flow meter on the SUPPLY line to adjust the desired flow rate.

Make sure the flow control handle is closed before starting the unit. Once the unit is running, use the handle to slowly open the valve until the desired flow rate is adjusted.

On units equipped to detect a low flow condition (Digital with Interlock temperature controllers equipped with a low flow monitor), the flow control valve must be opened slightly to allow fluid to circulate through the flow switch that monitors the flow rate. A flow rate of more than 0.3 gallons per minute (1.0 liters per minute) is necessary. If the flow is completely shut off, or if flow is not adequate, a low flow fault will occur and the unit will not start.



Never “crank” the valve wide open from the closed or slightly open position.

Pressure Gauge

The RECIRCULATING PRESSURE gauge is located next to the flow control handle. The gauge indicates the operating pressure of the system.

Pressure Relief Valve
(PD and TU Pumps Only)

Units with a PD-2 or any TU type pump have an adjustable pressure relief valve. Refer to the pump identification label on the rear of the case top or rear of analog controller to identify the specific pump in your unit.

The pressure relief valve establishes the maximum operating pressure of the unit. If the pressure of the fluid leaving the pump exceeds the valve setting, the relief valve will bypass the fluid within the unit to relieve the pressure. The valve does not determine the actual operating pressure; the operating pressure of the system is determined by the back pressure of the connected equipment and the setting of the flow control valve. If adjustment seems necessary, consult our Service Department for assistance.

Before calling, refer to the serial number label on the rear of the case top to obtain the following:

- *unit part number*
- *unit serial number*

High Pressure Cutout
(Water-Cooled Units Only)

Should the unit's refrigeration discharge pressure become too high the high pressure cutout will activate and shut down the unit. High pressures can be caused by a lack of cooling water to the compressor or debris in the refrigeration lines.

Once the cause of the problem has been identified and corrected you must manually reset the cutout. The cutout location depends on the size of your unit. On the HX-75, it is behind the right side panel, on the HX-100 and HX-150 it is behind the left side panel, and on the HX-200 through HX-750 it is behind the rear panel.

Locate the white reset switch on the high pressure cutout. Press in on the switch until a "click" is heard. If the reset does not "click" the cutout was not activated and the unit shut down occurred for another reason.

Section VI Special Features

Pump Motor Overload Protector

Refer to the serial number label for the specific electrical requirements of your unit; specifically, identify the phase requirements of your unit.

The pump motor overload protector prevents the pump motor from exposure to excessive current. If an overload fault occurs, due, for example, to excessive pressure or flow, or excessive ambient temperature, the overload protector will shut off the pump motor. The overload protector will automatically reset after approximately one to two minutes.

If a fault occurs, a red lamp on the protector enclosure will light while the pump motor is off. The lamp goes out once the protector resets.

The pump motor overload protector enclosure is located directly under the fluid reservoir. It is at the left rear corner for HX200s and HX300s units. It is at the side access panel for HX500s and HX750s units.

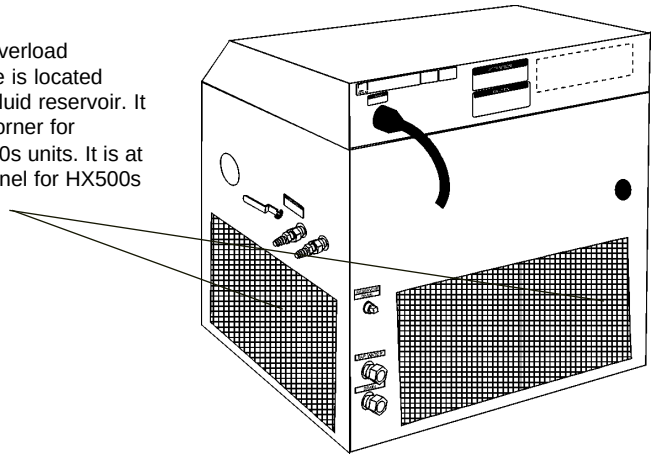

The unit's fault response also varies depending on the unit's configuration.

If the unit has a Digital temperature controller and a single phase pump motor, the unit will continue to run if an overload fault occurs. The pump will restart as soon as the protector resets.

If the unit has a Digital controller and a three phase pump motor, the pump and refrigeration system will both shut down until the protector resets.

If the unit has a Digital with Interlock temperature controller with a low flow monitor, the unit will shut down due to a low flow fault. The unit must be manually restarted after the protector resets.

The overload protector can be adjusted to require manual resetting after an overload fault. If you are unsure of the phase of the pump motor in your unit, contact our Service Department (see Preface, After-sale Support).

Heater Package (Optional)

The heater package option consists of an immersion heater in the unit's fluid reservoir, a high temperature limit device, a solid state zero-crossing relay, a heater ENABLE/DISABLE switch and a FAULT indicator. The ENABLE/ DISABLE switch and the FAULT indicator are located on a small control box appended to the right side of the case top. The FAULT indicator will light if the high temperature limit device is tripped. The high temperature limit device will disconnect power to the heater if the heater surface temperature exceeds a preset limit.

Heater Package Control Box (Typical)

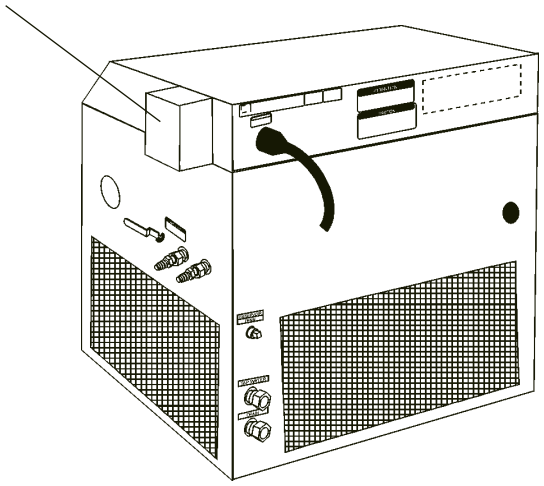

With the ENABLE/DISABLE switch set to ENABLE, the heater will cycle on and off under the control of the temperature controller. With the switch in the DISABLE position, the heater will remain off.

The heater high temperature limit device senses the surface temperature of the heater. If the heater temperature becomes too high, the limit device opens a mechanical relay to remove power from the heater.

The heater surface temperature may operate several degrees higher than the reservoir fluid. The limit device is factory set to a temperature above the upper limit of the temperature controller's range.

For personal safety and equipment reliability, the following procedure must only be performed by a qualified technician. Contact our Service Department for assistance (see Preface, After-sale Support).

To reset a tripped temperature limit device, lift and open the case top. The case top is secured to the unit base by a hinge between the case top and the base (along the rear of the unit), and by two spring clips located at the front corners, see page 7. To gain access to the temperature limit device, disengage the spring clips with a flat bladed screw driver and lift the front of the case top and tilt it back. A support brace, located on the right side of the inner case, will stop and support the case top.

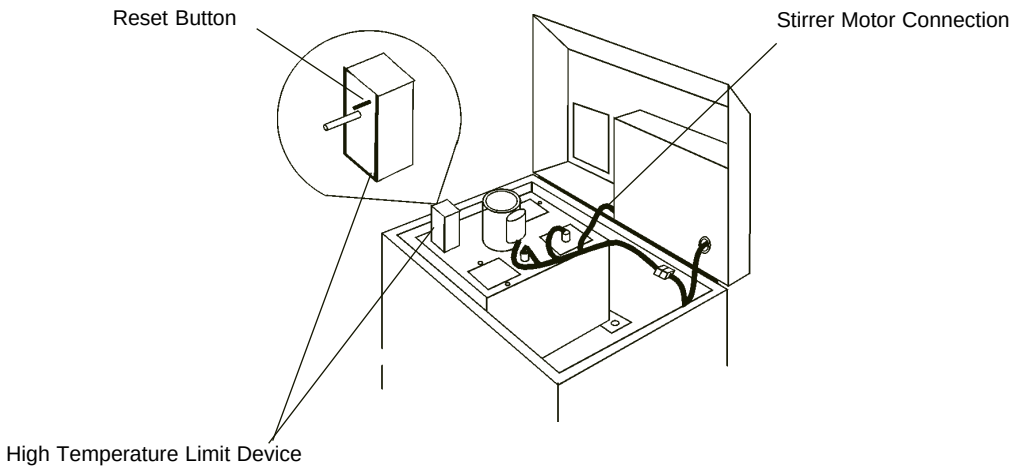

You must identify and correct the fault before restarting the unit.

The protection device and the heater power connections are located in a small stainless steel box on top of the fluid reservoir. The protection device has a reset button and a temperature limit adjustment shaft. Press the reset button to restore operation.

Some units equipped with heaters do not have a power cable. Installation of the cable is your responsibility. Wire the unit in conformance to local, state and federal electrical codes. Double check all wiring to make sure it is properly connected and protected from the elements.

The unit construction provides extra protection against the risk of electric shock by grounding appropriate metal parts. The extra protection may not function unless the power cord is connected to a properly grounded outlet. It is your responsibility to assure a proper ground connection is provided. For personal safety and equipment reliability, the following procedure should only be performed by a qualified technician.

To access the power cable connection box and install the cable:

- Lift the unit's bonnet.
- Remove the panel under the right half of the bonnet by removing the screws and the stirrer motor connection. (The stirrer motor connection is located at the lower left corner of the bonnet, see illustration above.)
- Remove the plastic plug on the rear of the bonnet. We recommend that you install an electrical conduit in place of the plastic plug.
- Insert your cable through the conduit.
- Locate the connection box and connect your cable to L1 and L2 (both connections are labeled) and to the ground stud (not labeled).
- Replace the panel and stirrer motor connection.

Remote Condenser (Optional)

Units with the optional remote air-cooled condenser are equipped with high and low refrigeration pressure monitors. The monitors are connected internally to a pressure gauge that monitors refrigeration pressure at the suction side of the compressor. The monitors protect the refrigeration system from operating under excessively high and low refrigeration pressures. A pressure fault occurs when the refrigeration pressure exceeds the set pressure limit.

The status of the monitors is indicated by the COMPRESSOR LOW PRESSURE and COMPRESSOR HIGH PRESSURE indicators located on the operator panel.

In the event of either a low or high refrigeration pressure fault, the unit will shut down. The unit must be manually restarted after the cause of the fault has been identified and corrected. If both indicators are lit simultaneously, an interruption in the main power supply has occurred.

Nitrogen Purge (Optional)

Units equipped with nitrogen purge valves are designed to accept a constant flow of dry nitrogen into the reservoir. The nitrogen blankets the cooling fluid reducing fluid evaporation.

Remove the reservoir cover by removing the screws. Fill the reservoir with fluid. Replace the reservoir cover and screws. Connect the nitrogen line to the valve on the reservoir cover.

A pressure regulator, set to 0.5 psig (0.35 kg/cm^3) or lower, should be used to prevent fluid overflow.

Particulate Filters (Optional)

Some custom units are fitted with particulate filter assemblies attached to the supply side of the recirculation water. The frequency for cleaning/changing the filter depends on your usage. Should the unit's performance be degraded, check the filter.

Filters are available from NESLAB, contact our Customer Service Center. Before calling refer to the serial number label on the rear of the unit to obtain the following information:

-unit serial number
-unit part number

15 pin Accessory Connector (Optional)

Units with digital controllers may be modified with a 15 pin accessory connector. To enable the connector slide the LOCAL/REMOTE switch on the temperature controller to the REMOTE position. The pin out information is listed below.

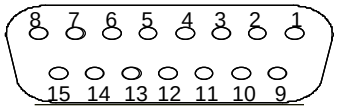

15 pin D-subminiature female receptacle

Pin #	Function
1	Chassis ground.
2	No connection.
3	Span +. Indicates the maximum setpoint value the unit can be set to operate. The temperature scale is 10mV/°C, referenced to analog ground, pin 6 (example: +350mV = +35.0°C).
4	Span -. Indicates the minimum setpoint value the unit can be set to operate. The temperature scale is 10mV/°C, referenced to analog ground, pin 6 (example: +50mV = +5.0°C).
5	No connection.
6	Analog ground. The analog ground is physically separated from the power ground throughout the unit. To prevent offsets that result from ground currents, the analog and power grounds are only connected at the unit's power supply. Analog ground should only be used as a reference pin .
7	Sensor temperature (current limited through 2.7K OHM resistor). The fluid temperature, as measured by the controller's sensor located in the reservoir, can be read at this pin. The temperature scale is 10mV/°C, referenced to analog ground, pin 6 (example: +150mV = +15.0°C).
8	Setpoint out. The present temperature setpoint can be read at this pin. The temperature scale is 10mV/°C, referenced to analog ground, pin 6 (example: +150mV = +15.0°C).
9	Power Ground.
10	Heater output. Will source 3V at 6mA.
11	No connection.
12	Digital display (input only). An external voltage can be displayed on the operator panel digital display by applying the voltage to this pin. The display has a low input resistance and a full scale rating of ±1.99VDC. Input is referenced to analog ground, pin 6. The maximum voltage applied to the display should be limited to ±2VDC.
13	- 5V. Power supply of -5VDC (15mA maximum).
14	+5V. Power supply of +5VDC (15mA maximum).
15	Setpoint in. The temperature setpoint can be controlled by applying a known voltage to this pin. The temperature scale is 10mV/°C, referenced to analog ground, pin 6 (example: +230mV = +23.0°C).

External Pressure Regulator (Optional)

For applications requiring a maximum pressure less than 55 psi, an External Pressure Reducer (EPR) is available. An EPR allows an adjustable operating pressure of 10 to 50 psi. If the pressure of the fluid leaving the unit exceeds the valve setting the relief valve will bypass the fluid back into the unit to relieve the pressure. The pressure of the system is determined by the back pressure of the connected equipment and the flow rate of the recirculating fluid to your application.

Connect the EPR assembly as shown below. Tighten the hose clamps tight enough to prevent leakage. Do not over-tighten or the clamps will “bite” into the flexible tubbing and can cause excessive wear.

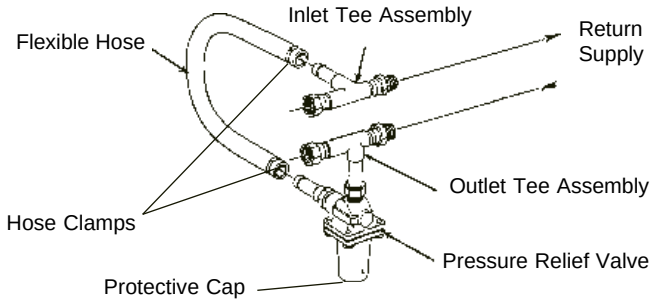

Connect the outlet tee assembly to the inlet of your application. Connect the inlet tee assembly to the outlet of your application.

Adjustment

When adjusting the relief valve some leaking may occur, place a container under the valve during adjustment.

Remove the protective cap and locate a threaded fitting with a slot for a large screwdriver. Hold the threaded fitting in place and loosen the lock nut on the valve body until it is almost flush with the threaded fitting. Unscrew the threaded fitting three to four turns. (If the threaded fitting unscrews completely from the valve housing, screw it back in two to three turns.)

To simulate blockage, close (or pinch off) the hose between the EPR outlet tee assembly and your application. Monitor the operating pressure of the HX unit. Turn the threaded fitting until the desired relief pressure is set (the EPR valve cannot be set lower than the total back pressure of your instrument, or flow will not be received).

Tighten the locknut to secure the position of the threaded fitting. Open the hose between the EPR outlet tee assembly and your application.

Automatic Refill Device (Optional)

The automatic refill device is designed to maintain the correct level of cooling fluid in the reservoir. The device consists of a float switch in the reservoir and a solenoid valve on top of the reservoir. If the cooling fluid level falls, the float switch will drop, opening the solenoid valve and allowing make-up fluid to fill the reservoir. Once the cooling fluid level reaches the proper level, the float switch will rise and the solenoid valve will close.

The plumbing connection for the refill device is located at the right rear corner of the unit and is labelled AUTO REFILL. This connection is a $^{3}/_{8}$ inch OD stainless steel barbed fitting.

Connect this fitting to a make-up fluid source using $^{5}/_{16}$ or $^{3}/_{8}$ inch ID flexible tubing. Make sure all tubing connections are securely clamped.

Tubing is available from NESLAB. Contact our Sales Department for more information (see Preface, After-sale Support).

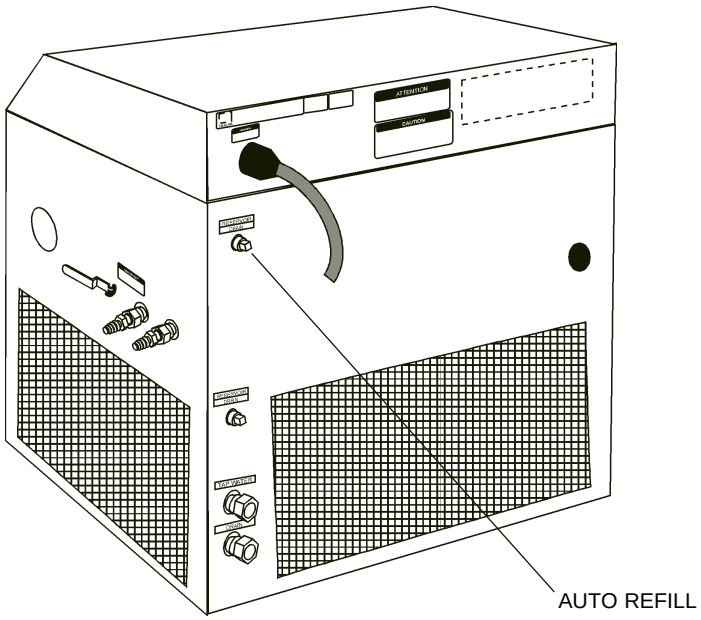

Section VII Maintenance

Service Contracts

NESLAB offers on-site Service Contracts that are designed to provide extended life and minimal down-time for your unit. For more information, contact our Service Department (see Preface, After-sale Support).

Condenser Cleaning (Air-cooled units only)

For proper operation, the unit needs to pull substantial amounts of air through a finned condenser. A build up of dust or debris on the fins of the condenser will lead to a loss of cooling capacity.

The frequency of cleaning depends on the operating environment. It is recommended that a visual inspection of the condenser be made monthly after initial installation. After several months, the frequency of cleaning will be established.

For "standard" air-cooled units, periodic vacuuming of the fins on the condenser is necessary.

For units with the optional remote air-cooled condenser, remove any debris from around the condenser site. If a visible accumulation of dust or dirt is found on the condenser fins, the condenser should be cleaned with a condenser cleaning solvent and rinsed with water.



Exercise caution not to damage the condenser fins or coil. Condenser fin or coil damage can result in a loss of performance and, in extreme cases, refrigeration system failure.

Hoses

The unit's internal and external hoses and clamps should be inspected and tightened on at least a semiannual basis.

Algae

To restrict the growth of algae in the fluid reservoir, it is recommended that the reservoir cover be kept in place and that all recirculation lines be opaque. This will eliminate the entrance of light which is required for the growth of most common algae.

NESLAB recommends the use of Chloramine-T, one gram per gallon.

Section VIII Service

For personal safety and equipment reliability, the following procedure should only be performed by a qualified technician. Contact our Service Department for assistance (see Preface, After-sale Support).

Configuration

Case Top

The unit has a hinged case top to allow service access. The case top is secured to the top of the unit base by a hinge between the case top and base (along the rear of the unit), and by two spring clips located at the front corners, see illustration on page 7. To gain access to the pump assembly or the reservoir area, disengage the spring clips with a flat bladed screw driver and lift the front of the top cover and tilt it back. A support brace, located on the right side of the inner base, will stop and support the case top. Ensure the spring clips engage when the top is lowered back into position.

Reservoir Cover

Access to the inside of the fluid reservoir is necessary to clean the reservoir. The figure on the next page illustrates a typical layout of the components mounted on top of the reservoir cover. The component layout varies depending on the unit size. If you are unable to identify the components on your unit's reservoir cover, contact our Service Department for assistance (see Preface, After-sale Support).

Disconnect the unit from its power source before removing the reservoir cover.

Locate the reservoir stirrer motor (units with plate heat exchangers and HX-75s do not have a stirrer motor; HX-500s and HX-750s have two stirrer motors). Disconnect the motor wires at the plug located on the side of the electrical box cover. Also disconnect the green ground wire that connects the ground stud on the reservoir cover to the unit's grounding bar.

Locate the float switch mounting bracket. Remove the two stainless steel screws that secure the bracket to the reservoir cover. Carefully remove the mounting bracket and place the assembly in an area adjacent to the reservoir. Make sure not to strain the connecting wires.

Locate the temperature sensor mounting plate. Remove the two stainless steel screws that secure the bracket to the reservoir. Carefully remove the sensor mounting plate with the sensor(s) attached and place the assembly in a protected area adjacent to the reservoir. Make sure not to damage the sensor(s) or strain the connecting wires.

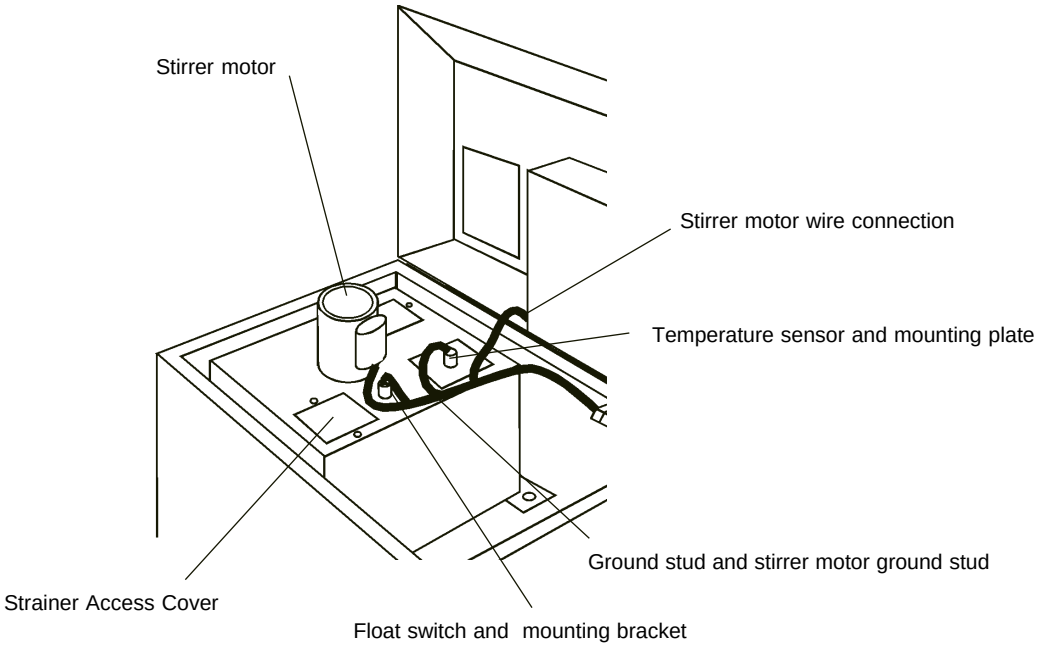

Remove the stainless steel screws that secure the reservoir cover to the reservoir. Remove the cover and place it to one side in a manner that protects the stirrer motor blades from being bent.

Service Access Panels

Service panels on your unit allow easy access to the pump and refrigeration assemblies. Panel location varies with the size and type of unit. The panels are designed to allow removal without disconnecting the HX from the instrument being cooled.

Disconnect the unit from its power source before removing any of the access panels.

Reservoir Cleaning

Periodic reservoir cleaning is necessary. It is recommended that a visual inspection of the reservoir be made monthly after initial installation. After several months, the frequency of cleaning will be established.

Disconnect the unit from its power source and drain the reservoir before cleaning the reservoir.

Lift the top cover to access the reservoir. Remove the reservoir cover as described in Section VIII, Configuration.

Clean the reservoir with a cleaning fluid compatible with the recirculating system and the cooling fluid.

Do not use steel wool or other abrasive materials. They can scratch the stainless steel surface and initiate rusting.

When the reservoir is clean, re-assemble the cover assembly and close the case top.

Refer to Section III, Filling Requirements for instructions on replacing the cooling fluid.

Pump Strainer
(PD and TU Pumps Only)

If debris is drawn into the recirculating system, the strainer will prevent the material from being sucked into the pump and damaging the pump vanes.

After initial installation, the strainer may become clogged with debris and scale. Therefore, the strainer must be cleaned after the first week of use. After this first cleaning, a monthly visual inspection is recommended. After several months, the cleaning frequency will be established.

Disconnect the power cord from the power source and drain the fluid reservoir before cleaning the strainer. Do not operate the unit with the strainer removed.

PD-2 and TU Pumps

The wire mesh pump strainer is located in the reservoir on the pump suction line. Remove the strainer access panel located on top of the reservoir cover to access the strainer.

Cover the strainer with a plastic bag to help catch any debris which may become free.

Unscrew the strainer and rinse it with water. Replace the strainer. Refer to Section III, Filling Requirements for instructions on replacing fluid.

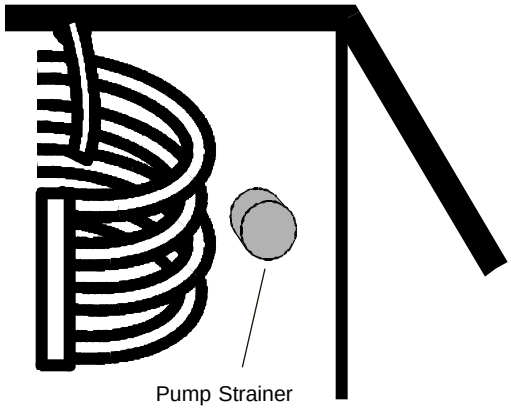

Reservoir cover deleted for clarity

Flow Filter Strainer (Optional)

Unit's equipped with flow switches have flow filter strainers located behind the top right access panel on the inlet side of the flow switch.

Unscrew the locknut and remove the screen. Clean the screen by rinsing it with water.

Replace the strainer and locknut. Refer to Section III, Filling Requirements for instructions on replacing the cooling fluid.

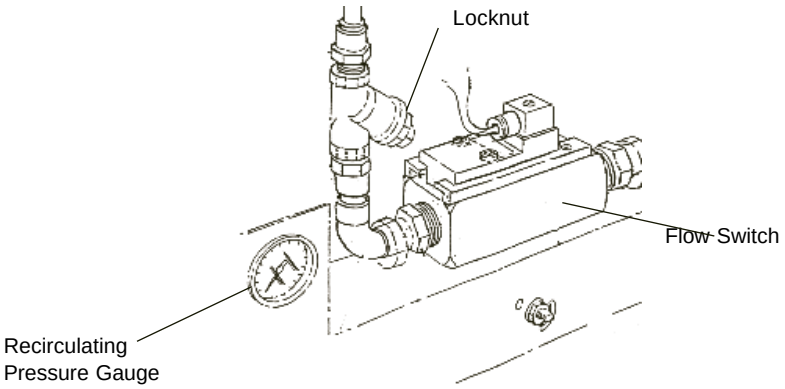

Phase Rotation

Refer to the serial number label on the rear of the case top or rear of analog controller for the specific electrical requirements of your unit; specifically, identify the phase requirements of your unit.

Three phase units with three phase pump motors have a phase rotation interlock. The interlock prevents the unit from starting if the phase rotation is wrong. If the unit will not start, see Section IX, Checklist. If the options in the checklist are not applicable, the problem may be phase rotation.

Disconnect the unit from its power source, remove the rear panel and the junction box cover (if so equipped). Reverse any two line conductors on the line side of the relay.

Never remove the green ground wire.



Replace the junction box and the rear panel. Reconnect the unit to its power source. If the unit will not start, contact our Service Department.

If you are unsure whether your three phase unit has a three phase pump motor, contact our Service Department (see Preface, After-sale Support).

Pump Lubrication

Units with PD-2 pumps require pump motor lubrication. Refer to the pump identification label on the rear of the case top to identify the specific pump in your unit.

Motors used to drive the pump are manufactured by several companies. These motors use sleeve type bearings with large oil reservoirs. Oiling instructions are generally posted on each motor. In the absence of instructions, add approximately 30 to 35 drops of SAE 20 non-detergent oil in each fill hole on the following schedule (SAE 20 = 142 CS viscosity):

Duty Cycle	Oiling Frequency
Continuous	Once every year
Intermittent	Once every 2 years
Occasional	Once every 5 years

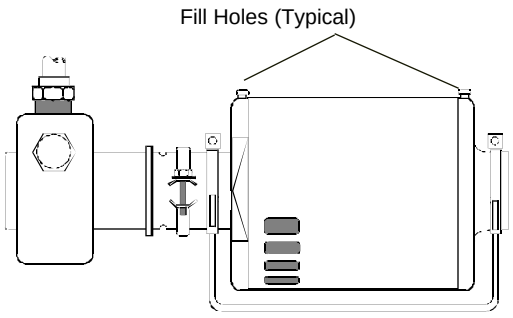

Suction Discharge Pressure Speed Check

Air-Cooled Standard and High Temperature Units (All Pump Types)[1]

Unit	Suction(psi)	Discharge(psi)	Speed Check(°C/Minute)
HX-75	77 - 84	225 - 250	1.5 - 1.7
HX-100	75 - 83	245 - 265	1.3 - 1.6
HX-150	70 - 73	240 - 270	2.0 - 2.5
HX-200	85 - 105	230 - 255	1.6 - 1.9
HX-300	84 - 105	270 - 305	2.4 - 2.7
HX-500	80 - 90	215 - 235	2.0 - 2.4
HX-750	65 - 75	185 - 215	

Water-Cooled Standard and High Temperature Units (All Pump Types)[2]

Unit	Suction(psi)	Discharge(psi)
HX-75	72	170
HX-100	86 - 92	180
HX-150	65	175
HX-200	85 - 90	180
HX-300	73 - 78	180
HX-500	75 - 82	150
HX-750	50 - 60	180

1. 27°C unit temperature, water in reservoir, access panel removed.
2. 25°C unit temperature, water in reservoir.

NOTE: For low temperature units please call NESLAB.

Section IX Troubleshooting

Checklist

Unit will not start

For CE Mark units, check the position of the circuit breaker on the right side of the unit.

Check power source for correct voltage output. Refer to the serial number label on the rear of the unit or rear of analog temperature controller for the specific electrical requirements of your unit. Power source must be specified voltage, ±10%.

Check house circuit breaker.

On three phase units with three phase pump motors, the phase rotation may be reversed (see Section VIII, Phase Rotation).

On water-cooled units, make sure the cooling water supply is connected to the TAP WATER connection, not the DRAIN connection. Ensure the facility water is turned on.

Check the High Pressure Cutout, it may need to be reset (see Section V, Operation).

Unit will not circulate fluid

Check the tubing between the unit and your application for obstructions.

The pump strainer may require cleaning (PD and TU pumps only). Refer to the pump identification label on the rear of the case top or rear of analog temperature controller to identify the specific pump in your unit. For instructions on cleaning the pump strainer, see Section VIII, Pump Strainer.

On units with CP type pumps, if the back pressure of the instrument being cooled is greater than the maximum pressure of the pump, adequate flow may not be obtained. Check for obstructions in the tubing.

Inadequate temperature control

Make sure the installation of the unit is in compliance with the conditions described in Section III.

Make sure the heat load of the instrument being cooled is not greater than the cooling capacity of the unit.

When the unit is shut off, wait approximately five minutes before restarting. This allows time for the refrigeration pressures to equalize. If the pressures are not allowed to equalize, the compressor will short-cycle (clicking sound) and no cooling will occur.

Service Assistance

If, after following these troubleshooting steps, your unit fails to operate properly, contact our Service Department for assistance (see Preface, After-sale Support). Before calling, please obtain the following information:

- *unit part number*
- *unit serial number*

Section X Diagrams

Refrigeration Flow Diagram (HX-75 through HX-150)

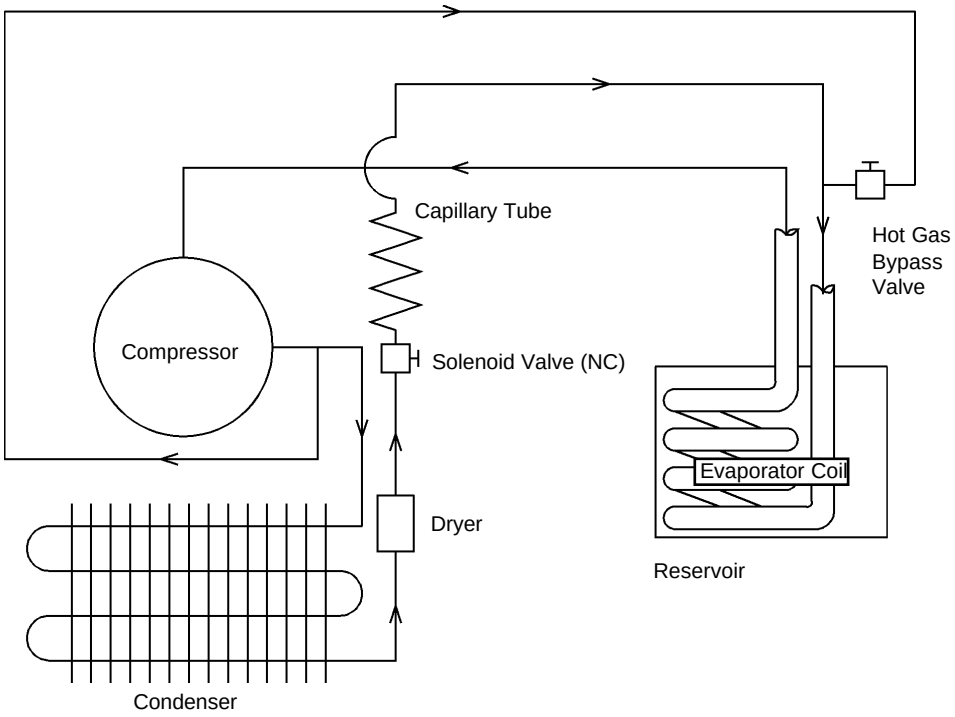

Refrigeration Flow Diagram (HX-200 through HX-750)

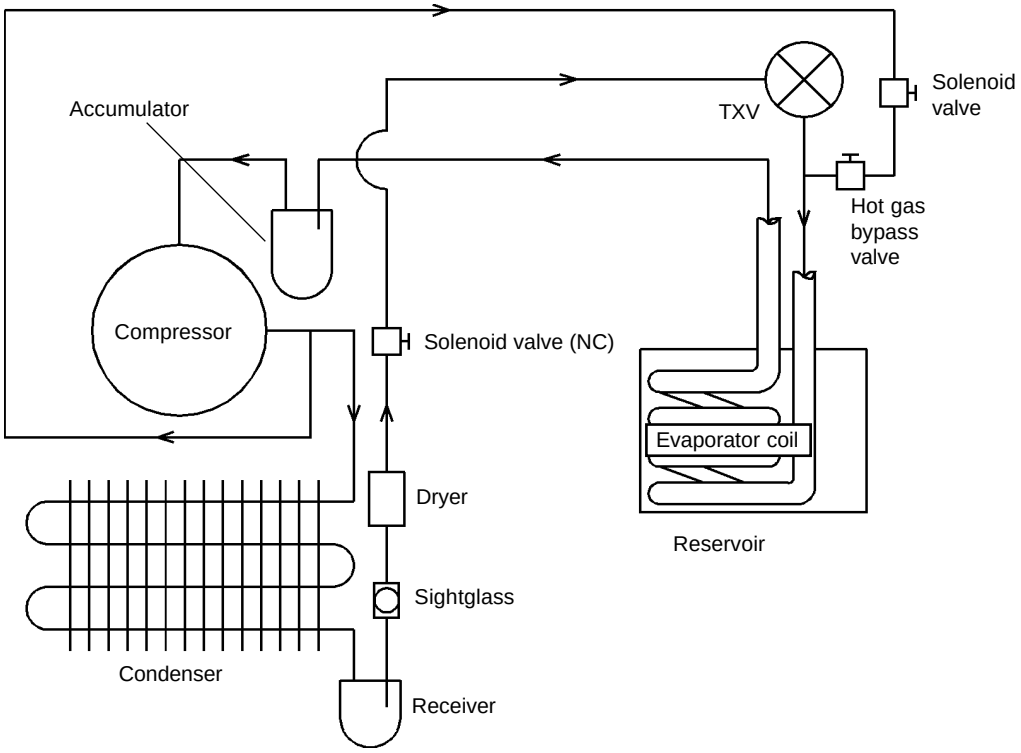

Pump Flow Diagram (CP Pumps)

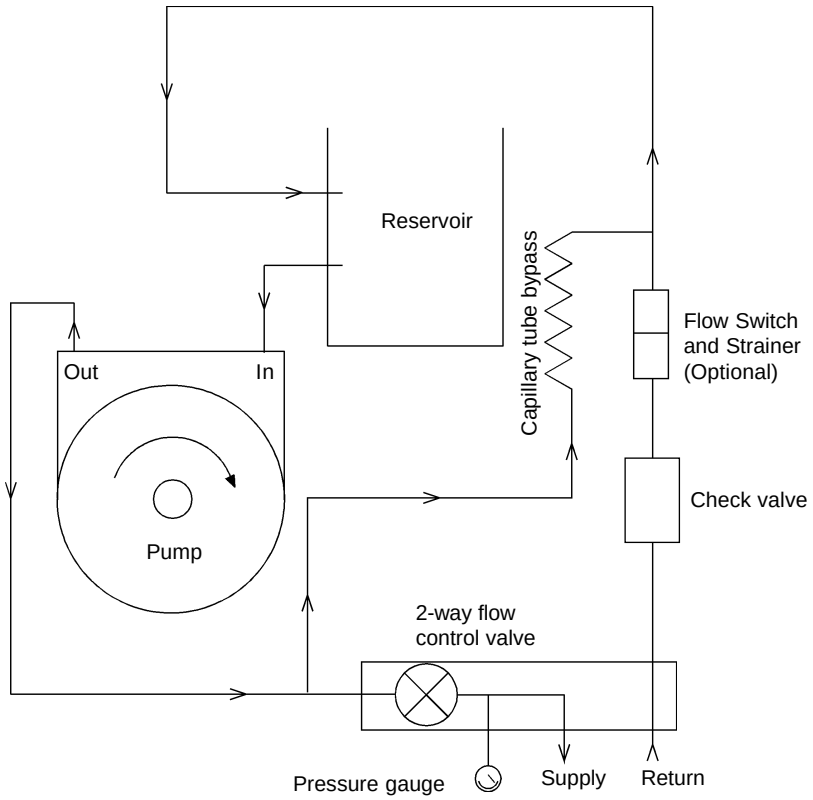

Pump Flow Diagram (PD and TU Pumps)

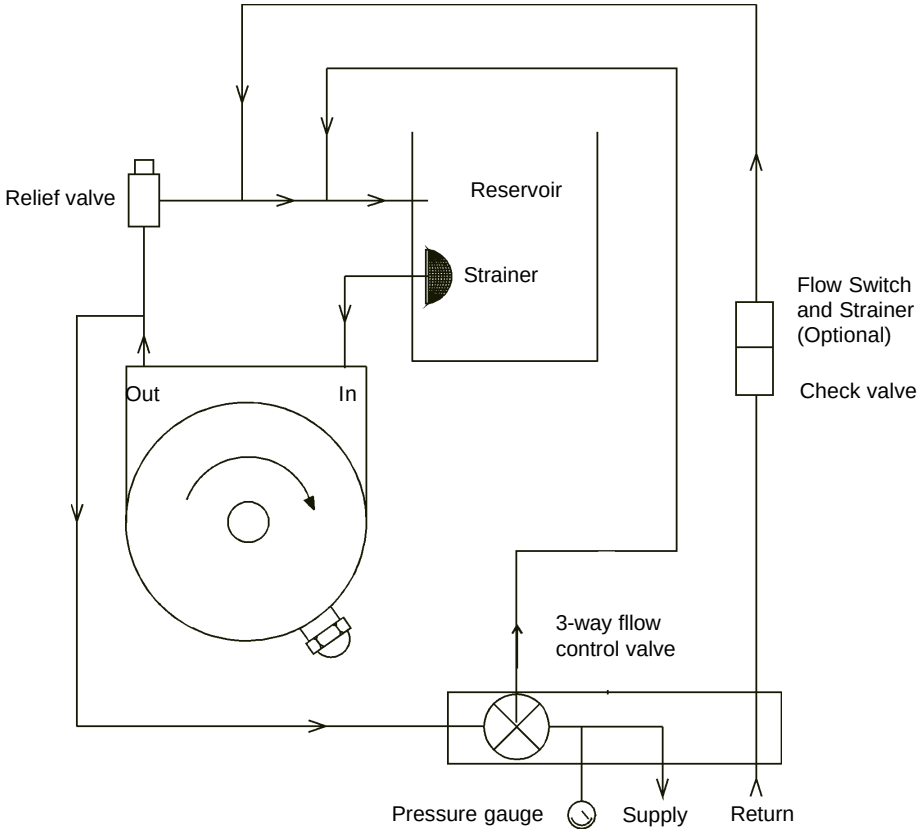

Dimensions

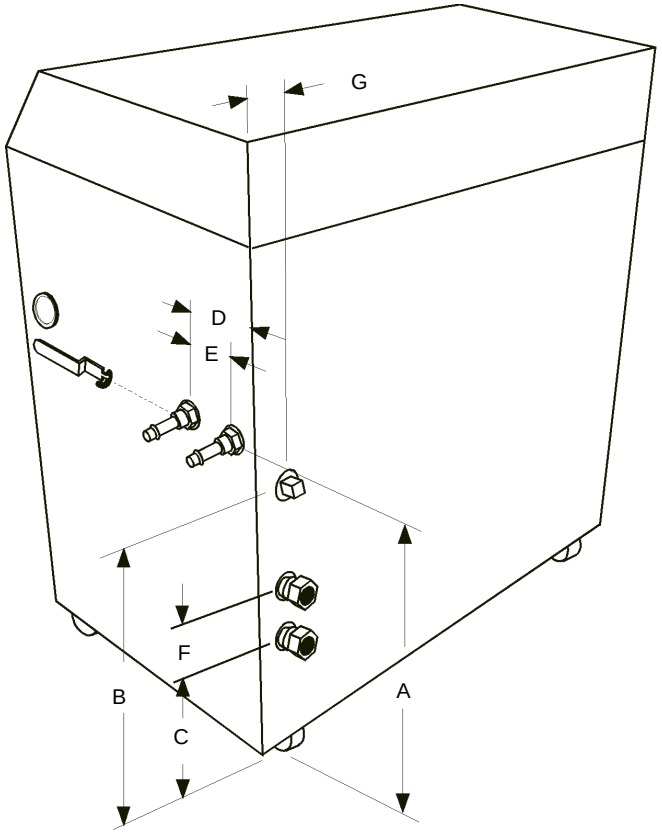

Unit Dimensions	HX75	HX100/HX150	HX200/HX300	HX500	HX750*
Dimension A	16	20	25 3/8	25¼	41
Dimension B	15¼	19¼	23½	21 1/8	33¾
Dimension C	8¼	9¼	8 3/8	5½	NA
Dimension D	7¼		7½	9½	
Dimension E	3				
Dimension F	3		3	5½	NA
Dimension G	1 3/8		1½	2¼	NA
Dimension H	2½		2 3/8	2¼	
Dimension I	24 7/8	27½	31½	35 1/8	35
Dimension J	48½	54	64 7/8	73½	86¼
Crate Dimensions (H x W x D)	46x30x27	49x33x29	55x40x33	61x54x36	74x54x36

* HX-750 air-cooled units. HX-750 water-cooled are the same size as the HX-500 units.

1. Dimensions are given in inches, ±1/8 inch.
2. Model HX-750 with a water-cooled condenser has the same dimensions as an HX-500.
3. Dimension A is the distance from the floor to the center of the SUPPLY and RETURN connections.
4. Dimension B is the distance from the floor to the center of the DRAIN connection.
5. Dimension C is the distance from the floor to the center of the tap water outlet connection.
6. Dimension D is the distance from the center of the SUPPLY connection to the rear of the unit case.
7. Dimension E is the distance between the SUPPLY and RETURN connections
8. Dimension F is the distance between the center of the TAP WATER connections (upper inlet and lower outlet).
9. Dimension G is the distance from the edge of the unit case to the center of the three plumbing connections.
10. Dimension H is the distance from the floor to the bottom of the case, height of the castors (not shown).
11. Dimension I is the depth of the unit with the case top open (not shown).
12. Dimension J is the height of the unit with the case top open (not shown).

Blank page.

APPENDIX A INTERNATIONAL QUICK REFERENCE GUIDES

HX - Serie luftgekühlt Kurzbedienungsanleitung

Installation

Das Gerät muß so plaziert werden, daß weder das Ansaugen noch Ausströmen von Luft behindert wird. Bei ungenügender Ventilation wird die Kühlleistung reduziert und kann in extremen Situationen zu einem Ausfall des Kühlsystems (Kompressors) führen.

Aufstellorte mit hoher Staubentwicklung sollten vermieden werden, und es sollte eine regelmäßige Reinigung des Gerätes durchgeführt werden. Um einwandfrei zu funktionieren, muß das Gerät große Luftmengen durch den Kondensor ansaugen. Bei Staub- und Schmutzablagerungen auf dem Kondensorheizkörper kommt es zu einem Verlust von Kühlleistung.

Das Gerät behält seine maximale Kühlleistung bis zu einer Umgebungstemperatur von ca. +24°C.

Vergewissern Sie sich, daß die Spannung Ihrer Stromanschlüsse mit der für das Gerät vorgesehenen Spannung übereinstimmt (±10%).

Die Schlauchanschlüsse (3/4 Zoll FPT) des Gerätes befinden sich an der Rückseite und sind mit SUPPLY und RETURN bezeichnet. Bitte entfernen Sie die Gummiabdichtung von beiden Anschlüssen. Schließen Sie den SUPPLY-Anschluß an den Eingang Ihres Instruments und den RETURN-Anschluß an den Ausgang Ihres Instruments an.

Um das Reservoir zu füllen, öffnen Sie die Abdeckplatte in der linken hinteren Ecke der Gehäuseoberseite und entfernen Sie die Reservoirabdeckung, indem Sie die Flügelschrauben lösen. Füllen Sie das Reservoir bis 1 Zoll unterhalb des Randes mit sauberer Kühlflüssigkeit. Wenn das zu kühlende Instrument und die Zirkulationsleitungen sehr viel Kühlflüssigkeit aufnehmen können, sollten Sie zusätzliche Kühlflüssigkeit zur Hand haben, um gegebenenfalls nachfüllen zu können.

Für den Betrieb im Arbeits-Temperaturbereich von +8°C bis +80°C empfiehlt NESLAB Leitungswasser als Kühlmittel, bei niedrigeren Temperaturen als +8°C muß eine nicht gefrierende Flüssigkeit verwendet werden. Wir empfehlen eine Mischung aus Leitungswasser und Labor Ethylen Glykol.

Inbetriebnahme

Vor Inbetriebnahme des Gerätes vergewissern Sie sich bitte, daß die elektrischen Anschlüsse und die Rohr- u. Schlauchanschlüsse sachgemäß installiert sind und daß das gesamte System mit Kühlflüssigkeit gefüllt ist.

Die Modelle HX-200 bis HX-750 müssen vor dem Starten mindestens 12 Stunden an die Stromversorgung angeschlossen werden, damit das Öl im Kompressor erwärmt werden kann und sich von der Kühlflüssigkeit abscheiden kann.

Um das Gerät einzuschalten, müssen Sie den Hauptschalter auf „ON“ stellen. Die „COOL“- und „IDLE“-Anzeigen auf der Steuertafel geben den Status des Kühlsystems an. Die COOL-Anzeige leuchtet, wenn das Kühlsystem der Kühlflüssigkeit Wärme entzieht. Die HEAT-Anzeige leuchtet, wenn sich das Gerät im Hot Gas Bypass Modus befindet.Wenn die Temperatur der Kühlflüssigkeit sich der gewünschten Temperatur nähert, blinken die Anzeigen, um den Arbeitszyklus des Systems anzugeben.

Nach dem Ausschalten des Gerätes sollten Sie vor dem Wiedereinschalten ca. 5 Minuten warten, damit das Kühlsystem einen Druckausgleich durchführen kann. Beachtet man diese Wartezeit nicht, kommt es zu kurzen Schaltfrequenzen des Kompressors und eine Kühlung ist nicht möglich.

Einstellung der Analog-Temperatursteuerung

Um die Temperatur einzustellen (setpoint), drehen Sie den °C-Schalter an der Vorderseite des Gerätes auf die gewünschte Temperatur.

Einstellung der Digital-Temperatursteuerung

Um sich den Temperatur-Setpoint anzeigen zu lassen, drücken Sie den DISPLAY-Schalter und halten Sie ihn gedrückt. Um den Temperatur-Setpoint einzustellen, drücken Sie den Display-Schalter, halten diesen, und drehen gleichzeitig den ADJUST-Schalter so lange, bis die gewünschte Temperatur in der Digitalanzeige angezeigt wird. Wenn die Temperatur eingestellt ist, lassen Sie den Display-Schalter los. Die Digitalanzeige zeigt dann die Temperatur der Kühlflüssigkeit im Reservoir an.

Flußsteuerung
Der RECIRCULATION FLOW CONTROL Hebel kontrolliert die Durchflußmenge der Kühlflüssigkeit zu Ihrer Anwendung. In der „+“-Stellung wird die gesamte verfügbare Kühlflüssigkeit an die Anwendung abgegeben, in der „-“-Stellung wird keine Kühlflüssigkeit an die Anwendung abgegeben.

WHX - Serie wassergekühlt Kurzbedienungsanleitung**Installation**
Stellen Sie das Gerät in einer sauberen Umgebung mit einfachem Zugang zu einem Gebäudewasseranschluß und einem Abfluß auf. Das Gebäudewasser muß den in der Anleitung festgelegten Anforderungen genügen, sonst wird die Leistung des Gerätes herabgesetzt. Unzureichende Wasserzufuhr kann zu einer Überhitzung des Kompressors und so zu einem Ausfall des Gerätes führen.

Vergewissern Sie sich, daß die Spannung Ihrer Stromanschlüsse mit der für das Gerät vorgesehenen Spannung übereinstimmt (± 10%).

Die Schlauchanschlüsse des Gerätes befinden sich an der Rückseite und sind mit TAP WATER, DRAIN, SUPPLY und RETURN bezeichnet. Bitte entfernen Sie die Gummiabdichtung von allen Anschlüssen. Schließen Sie den TAP WATER-Anschluß an das Gebäudewasser und den DRAIN-Anschluß an den Abfluß an. Schließen Sie den SUPPLY-Anschluß an den Eingang Ihres Instruments und den RETURN-Anschluß an den Ausgang Ihres Instruments an.

Um das Reservoir zu füllen, öffnen Sie die Abdeckplatte in der linken hinteren Ecke der Gehäuseoberseite und entfernen Sie die Reservoirabdeckung, indem Sie die Flügelschrauben lösen. Füllen Sie das Reservoir bis 1 Zoll unterhalb des Randes mit sauberer Kühlflüssigkeit. Wenn das zu kühlende Instrument und die Zirkulationsleitungen sehr viel Kühlflüssigkeit aufnehmen können, sollten Sie zusätzliche Kühlflüssigkeit zur Hand haben, um gegebenenfalls nachfüllen zu können.

Für den Betrieb im Arbeits-Temperaturbereich von +8°C bis +80°C empfiehlt NESLAB Leitungswasser als Kühlmittel, bei niedrigeren Temperaturen als +8°C muß eine nicht gefrierende Flüssigkeit verwendet werden. Wir empfehlen eine Mischung aus Leitungswasser und Labor Ethylen Glykol.

HX - Serie wassergekühlt Kurzbedienungsanleitung

Installation
Stellen Sie das Gerät in einer sauberen Umgebung mit einfachem Zugang zu einem Gebäudewasseranschluß und einem Abfluß auf. Das Gebäudewasser muß den in der Anleitung festgelegten Anforderungen genügen, sonst wird die Leistung des Gerätes herabgesetzt. Unzureichende Wasserzufuhr kann zu einer Überhitzung des Kompressors und so zu einem Ausfall des Gerätes führen.

Vergewissern Sie sich, daß die Spannung Ihrer Stromanschlüsse mit der für das Gerät vorgesehenen Spannung übereinstimmt (±10%).

Die Schlauchanschlüsse des Gerätes befinden sich an der Rückseite und sind mit TAP WATER, DRAIN, SUPPLY und RETURN bezeichnet. Bitte entfernen Sie die Gummiabdichtung von allen Anschlüssen. Schließen Sie den TAP WATER-Anschluß an das Gebäudewasser und den DRAIN-Anschluß an den Abfluß an. Schließen Sie den SUPPLY-Anschluß an den Eingang Ihres Instruments und den RETURN-Anschluß an den Ausgang Ihres Instruments an.

Um das Reservoir zu füllen, öffnen Sie die Abdeckplatte in der linken hinteren Ecke der Gehäuseoberseite und entfernen Sie die Reservoirabdeckung, indem Sie die Flügelschrauben lösen. Füllen Sie das Reservoir bis 1 Zoll unterhalb des Randes mit sauberer Kühlflüssigkeit. Wenn das zu kühlende Instrument und die Zirkulationsleitungen sehr viel Kühlflüssigkeit aufnehmen können, sollten Sie zusätzliche Kühlflüssigkeit zur Hand haben, um gegebenenfalls nachfüllen zu können.

Für den Betrieb im Arbeits-Temperaturbereich von +8°C bis +80°C empfiehlt NESLAB Leitungswasser als Kühlmittel, bei niedrigeren Temperaturen als +8°C muß eine nicht gefrierende Flüssigkeit verwendet werden. Wir empfehlen eine Mischung aus Leitungswasser und Labor Ethylen Glykol.

Inbetriebnahme
Vor Inbetriebnahme des Gerätes vergewissern Sie sich bitte, daß die elektrischen Anschlüsse und die Rohr- u. Schlauchanschlüsse sachgemäß installiert sind und daß das gesamte System mit Kühlflüssigkeit gefüllt ist.

Die Modelle HX-200 bis HX-750 müssen vor dem Starten mindestens 12 Stunden an die Stromversorgung angeschlossen werden, damit das Öl im Kompressor erwärmt werden kann und sich von der Kühlflüssigkeit abscheiden kann.

Um das Gerät einzuschalten, müssen Sie den Hauptschalter auf „ON“ stellen. Die „COOL“- und „IDLE“-Anzeigen auf der Steuertafel geben den Status des Kühlsystems an. Die COOL-Anzeige leuchtet, wenn das Kühlsystem der Kühlflüssigkeit Wärme entzieht. Die HEAT-Anzeige leuchtet, wenn sich das Gerät im Hot Gas Bypass Modus befindet.Wenn die Temperatur der Kühlflüssigkeit sich der gewünschten Temperatur nähert, blinken die Anzeigen, um den Arbeitszyklus des Systems anzugeben.

Nach dem Ausschalten des Gerätes sollten Sie vor dem Wiedereinschalten ca. 5 Minuten warten, damit das Kühlsystem einen Druckausgleich durchführen kann. Beachtet man diese Wartezeit nicht, kommt es zu kurzen Schaltfrequenzen des Kompressors und eine Kühlung ist nicht möglich.

Einstellung der Analog-Temperatursteuerung
Um die Temperatur einzustellen (setpoint), drehen Sie den °C-Schalter an der Vorderseite des Gerätes auf die gewünschte Temperatur.

Einstellung der Digital-Temperatursteuerung
Um sich den Temperatur-Setpoint anzeigen zu lassen, drücken Sie den DISPLAY-Schalter und halten Sie ihn gedrückt. Um den Temperatur-Setpoint einzustellen, drücken Sie den Display-Schalter, halten diesen, und drehen gleichzeitig den ADJUST-Schalter so lange, bis die gewünschte Temperatur in der Digitalanzeige angezeigt wird. Wenn die Temperatur eingestellt ist, lassen Sie den Display-Schalter los. Die Digitalanzeige zeigt dann die Temperatur der Kühlflüssigkeit im Reservoir an.

Flußsteuerung
Der RECIRCULATION FLOW CONTROL Hebel kontrolliert die Durchflußmenge der Kühlflüssigkeit zu Ihrer Anwendung. In der „+“-Stellung wird die gesamte verfügbare Kühlflüssigkeit an die Anwendung abgegeben, in der „-“-Stellung wird keine Kühlflüssigkeit an die Anwendung abgegeben.

Wartung
Überprüfen Sie regelmäßig die Kühlflüssigkeit im Reservoir. Sollte eine Säuberung notwendig sein, spülen Sie das Reservoir mit einer speziellen Reinigungsflüssigkeit, die mit dem Umlaufsystem und der Kühlflüssigkeit kompatibel ist.

Das Kühlmittel sollten Sie regelmäßig erneuern. Wenn Sie das Gerät bei niedrigen Temperaturen betreiben, erhöht sich mit der Zeit der Wasseranteil in der Kühlflüssigkeit. Dies führt zum Verlust von Kühlkapazität.

Regelmäßiges Absaugen des Kondensor-Heizkörpers ist erforderlich. Die Reinigungshäufigkeit hängt von der Betriebsumgebung ab. Eine monatliche Überprüfung des Kondensors ist empfehlenswert. So werden Sie nach einigen Monaten einen Reinigungsrhythmus gefunden haben.

Geräte mit PD- und TU-Pumpen sind mit einem Pumpenfilter ausgestattet. Der Filter sorgt dafür, daß kleine Teilchen und Schmutzablagerungen nicht in die Pumpe gelangen und so die Pumpflügel beschädigen können.

Nach der Erstinstallation kann es zu einer Blockierung des Filters kommen. Die erste Reinigung sollte daher nach einer Woche erfolgen. Danach empfehlen wir eine monatliche Überprüfung des Filters. So können Sie nach einiger Zeit abschätzen, wie oft der Filter gereinigt werden muß.

Bevor Sie den Filter reinigen, ziehen Sie den Netzstecker aus der Steckdose und leeren Sie das Reservoir.

Luftkølet HX-serie Kvik referance.

Installation:
Opstilles i rene omgivelser.

Steder med meget støv skal undgåes, og periodisk rensning skal udføres, hvis utilsigtet nedbrud skal undgåes. Opbygning af støv vil medføre fald i kølekapasiteten og i værste fald overophedning af systemet.

Check at netspændingen er den nominelle 240V ± max. 10%.

Slangetilgang er på bagsiden mærket „Supply“ til indgang på dit emne og „Return“ på udgangen.

Ledningsvand (ionbyttet) kan anvendes mellem +8 til 80^0 C, under $+8^0$ C skal væsken blandes op med ethylenglycol.

Fyldning af reservoiret foregår ved at fjerne panelet, som er forsynet med fingerskruer, og påfyld egnet rent kølevæske, max 5 cm fra toppen

Betjening:
Før opstart checkes elektriske forbindelser, slangeforbindelser, væske stand og brugsvand er tilsluttet.

Analog temperatur kontrol:
Drej på knappen mærket C til den rigtige temperatur.

Digital temperatur kontrol:
Setpunktet vises ved at holde „Display“ tasten inde, skal temperaturen ændres drejes herefter på „Adjust“ knappen. Slip „Display“ knappen og aktuel temperatur vises.

Flow kontrol:
Drej på „RECIRCULATING FLOW CONTROL“ + for at åbne og - for at lukke.

Periodisk vedligeholdelse:
Check standen af væske periodisk. Check med mellemrum vakuumet på pumpesiden, rens systemet og check for aflejringer, vækst, utætheder, check vakuumpumpen med kondenser og evt. filtre. Husk åben aldrig instrumentet uden strømmen er afbrudt, og strømkablet er taget ud!

Vandkølet HX-serie Kvik referance.

Installation:
Opstilles i rene omgivelser

Steder med meget støv skal undgås og periodisk rensning skal udføres, hvis utilsigtet nedbrud skal undgås. Opbygning af støv vil medføre fald i kølekapasiteten og i værdste fald overophedning af systemet.

Check at netspændingen er den nominelle 240V ± max. 10%.

Slangetilgang er på bagsiden mærket „TAP WATER“ (hanevand) og „DRAIN“ (ud), samt „Supply“ og „Return“. Inden tilslutning af fittings fjernes plaststøvkappen fra rørstudsene. „TAP WATER“ tilsluttes ledningsvand og „DRAIN“ til afløb. Tilslut dernæst „Supply“ til indgang på dit emne og „Return“ på udgangen.

Ledningsvand (ionbyttet) kan anvendes mellem +8 til 80 deg. C, under +8 deg C skal væsken blandes op med ethylenglycol.

Fyldning af reservoiret foregård ved at fjerne panelet, som er forsynet med fingerskruer og påfyld egnet rent kølevæske, max 5 cm fra toppen

Betjening:
Før opstart chekes elektriske forbindelser, slangeforbindelser, væske stand og brugsvand er tilsluttet.

Analog temperatur kontrol:
Drej på knappen mærket C til den rigtige temperatur.

Digital temperatur kontrol:
Setpunktet vises ved at holde „Display“ tasten inde, skal temperaturen ændres drejes herefter på „Adjust“ knappen. Slip „Display“ knappen og aktuel temperatur vises.

Flow kontrol:
Drej på „RECIRCULATING FLOW CONTROL“ + for at åbne og - for at lukke.

Periodisk vedligeholdelse:
Check standen af væske periodisk. Check med mellemrum vacuummet på pumpesiden, rens systemet og check for aflejringer, vækst, utætheder, check vacuumpumpen med kondenser og evt. filtre. Husk åbn aldrig instrumentet uden strømmen er afbrudt og strømkablet er taget ud!

Watergekoelde HX Series, Handleiding voor snelle installatie-procedures

Installatie
Plaats het apparaat in een ruimte waar gebouwenwater en de mogelijkheid tot afvoer daarvan binnen handbereik zijn. De eisen van de waterfaciliteiten moeten overeenkomen met die gespecificeerd in de handleiding, anders zal het apparaat onvoldoende prestaties leveren. Onvoldoende watertoevoer kan ertoe leiden dat de compressor oververhit raakt en het apparaat uitgeschakeld wordt.

Let erop dat de netspanning gelijk is aan ht aangegeven voltage, ±10%.

De slangaansluitingen zijn bevestigd aan de achterkant van het apparaat en zijn voorzien van de labels TAPWATER, DRAIN, SUPPLY en RETURN. Verwijder de plastic beschermingspluggen van alle slangaansluitingen. De TAPWATER plug dient aangesloten te worden aan de watertoevoer en de DRAIN plug dient te worden aangesloten aan de afvoer. Bevestig de SUPPLY plug aan de ingang van uw applicatie en bevestig de RETURN plug aan de uitgang van uw applicatie.

Om het reservoir te vullen dient men het toegangspaneel aan de linkerachterkant te openen en het reservoir door middel van het losdraaien van de duimschroeven te verwijderen. Vul nu het reservoir tot maximaal 1 inch aan de bovenkant.Indien de vloeistof level van uw toepassingen en de toe- en afvoer leidingen voldoende zijn, dient u altijd extra vloeistof achter de hand te houden.

Kraanwater is aan te bevelen bij een arbeidsproces van 8C. tot +80C. Beneden de +8°C. dient men een non-freezing vloeistof te gebruiken. Een combinatie van kraanwater en laboratorium gerichte ehtylene glycol wordt in het algemeen aanbevolen.

Operationeel gebruik
Alvorens het apparaat te starten, dient men de elektrische- en slangaansluitingen te controleren. Controleer tevens of het systeem gevuld is met koelvloeistof.

De modellen HX-200 tot HX-750 dienen 12 uur aangesloten te zijn aan de netspanning, zodat de olie verhit kan worden en gescheiden kan worden van de koelvloeistof.

Om het apparaat te starten moet men de schakelaar op “ON” zetten. De “Cool” en “Idle LEDs” aan de voorkant van het apparaat geven de status van het koelsysteem weer. “Cool” is in werking wanneer het apparaat warmte van de koelvloeistof onttrekt, “Heat” is in werking wanneer het apparaat in de Hot Gas Bypass stand is gesteld. Indien de ingegeven temperatuur bereikt is, zal de LED switchen.

Wanneer het apparaat uitgeschakeld is, gelieve 5 minuten te wachten alvorens u het apparaat weer in werking stelt. Deze tijd is nodig voor de drukken in het koelsysteem. Indien dit niet gebeurt, zal er short-cycle optreden binnen de compressor en er vindt geen koeling plaats.

Analog ControllerTemperature Adjustment
Om de temperatuur set-point aan te passen, gelieve de Gr.C. knop aan de voorkant van het apparaat te draaien naar de gewenste temperatuur.

Digital ControllerTemperature Adjustment
Om de temperatuur set-point aan te duiden, houdt u de “DISPLAY” knop ingedrukt. Om de temperatuur set-point aan te passen, houdt u de “DISPLAY” knop ingedrukt en draait u de “ADJUST” knop totdat de gewenste temperatuur set-point af te lezen is van de display. Als de set-point is aangepast, kunt u de “DISPLAY” knop loslaten. De display zal nu de temperatuur weergeven van de vloeistof in het reservoir.

Flow Control
Met de RECIRCULATING FLOW CONTROL kunt u het debiet van uw applicatie regelen. De “+” positie geeft u een volledig debiet weergegeven, de “-” positie geeft geen debiet.

Periodiek Onderhoud
De vloeistof in het reservoir dient regelmatig gecontroleerd te worden. Indien reiniging noodzakelijk is, zal het reservoir schoongespoeld moeten worden met een vloeistof welke gelijk is aan het circulatiesysteem en de koelvloeistof..

De koelvloeistof dient periodiek vervangen te worden. Wanneer u werkt met lage temperaturen, zal de concentratie van het water in de koelvloeistof gedurende die tijd toenemen, wat verlies van koelcapaciteit tot gevolg kan hebben.

Het periodiek luchtvrij maken van de condensor is noodzakelijk. Het aantal malen dat dit moet gebeuren hangt af van de omgeving waar het apparaat staat opgesteld en tevens gebruikt wordt. Wij raden een algemene maandelijkse inspektie van de condensor aan na de installatie. Na enkele maanden zal duidelijk zij hoe vaak men de condensor moet reinigen.

Apparaten met PD en TU pompen hebben een afvoer. Indien vuil aanwezig is in het systeem, zal de afvoer ervoor zorgen dat het materiaal niet in de pomp terecht komt en daardoor de pompleidingen niet beschadigd.

Nadat het apparaat geinstalleerd is, zou de afvoer verstopt kunnen raken. De afvoer zal in de eerste week na de installatie schoongemaakt moeten worden. Nadien is een maandelijkse inspektie aan te raden. Na enkele maanden zal duidelijk zijn hoe vaak men de afvoer moet reinigen.

Alvorens de afvoer te reinigen, gelieve het apparaat uit te schakelen en het reservoir te ledigen.

Luchtgekoelde HX Series, Handleiding voor snelle installatie-procedures

Installatie
Plaats het apparaat op een dusdanige manier dat luchttoevoer en afvoer niet wordt belemmerd. Inadequate ventilatie kan leiden tot afname van koelcapaciteit en, in extreme gevallen, tot het niet functioneren van de compressor.

Het is aan te raden stoffige ruimtes te vermijden en de condensor regelmatig schoon te houden.

Voor een juiste werking moet het apparaat een voldoende hoeveelheid lucht aanzuigen door middel van een condensor. Een opeenhoping van stof en vuil op de condensor kan leiden tot een verlies van koelcapaciteit.

Het apparaat behoudt haar integrale capaciteit bij een omgevingstemperatuur tot ongeveer +24°C.

Let erop dat de netspanning gelijk is aan het aangegeven voltage, ±10%.

De slangaansluitingen zijn bevestigd aan de achterkant van het apparaat en zijn voorzien van het label SUPPLY en RETURN. Deze aansluitingen zijn 3/4 inch FPT. Verwijder de plastic beschermingspluggen van beide slangaansluitingen. Bevestig de SUPPLY plug met de ingang van het apparaat welke gekoeld wordt. Bevestig de RETURN plug aan de uitgang van van uw applicatie.

Om het reservoir te vullen, gelieve het toegangspaneel te verwijderen door middel van het losdraaien van de duimschroeven. Vul nu het reservoir tot 2 inches van het maximum wanneer het apparaat de gewenste temperatuur heeft bereikt. Indien het vloeistof level van uw toepassingen de toe-afvoer leidingen voldoende zijn.

Kraanwater wordt in het algemeen aanbevolen, indien men werkt met temperaturen van +8°C tot +80°C.

Beneden de +8°C. moet een non-freezing vloeistof gebruikt worden. Een combinatie van kraanwater en ethylene glycol wordt aanbevolen.

Operationeel gebruik
Alvorens het apparaat in gebruik te nemen, gelieve eerst alle elektrische- en slangaansluitingen te controleren. Controleer ook of het systeem gevuld is met koelvloeistof.

De modellen HX-200 tot HX-750 dienen 12 uur aangesloten te zijn aan de netspanning, zodat de olie verhit en gescheiden kan worden van de koelvloeistof.

Om het apparaat te starten moet men de schakelaar op “ON” zetten. De “Cool” en “Idle LEDs” aan de voorkant van het apparaat duiden de status van het koelsysteem aan. “Cool” is in werking wanneer het apparaat warmte van de koelvloeistof ontlucht, “Heat” is in werking wanneer het apparaat in de Hot Gass Bypass stand is gesteld. Indien de ingegeven temperatuur bereikt is, zal de LED switchen.

Wanneer het apparaat uitgeschakeld is, gelieve 5 minuten te wachten alvorens u het apparaat weer in werking stelt. Deze tijd is nodig om de drukken in het koelsysteem. Indien dit niet gebeurt, zal er short-cycle binnen de compressor optreden en er vindt geen koeling plaats.

Analog ControllerTemperature Adjustment
Om de temperatuur set-point aan te passen, gelieve de Gr.C. knop aan de voorkant van het apparaat te draaien naar de gewenste temperatuur.

Digital ControllerTemperature Adjustment
Om de temperatuur set-point aan te duiden, houdt u de “DISPLAY” knop ingedrukt. Om de temperatuur set-point aan te passen, houdt u de “DISPLAY” knop ingedrukt en draait u de “AD-JUST” knop totdat de gewenste temperatuur set-point af te lezen is van de display. Als de set-point is aangepast, kunt u de “DISPLAY” knop loslaten. De display zal nu de temperatuur weergeven van de vloeistof in het reservoir.

Flow Control
Met de RECIRCULATING FLOW CONTROL kunt u het debiet van uw applicatie regelen. De “+” positie geeft u een volledig debiet, de “-” positie geeft geen debiet.

Periodiek Onderhoud
De vloeistof in het reservoir dient regelmatig gecontroleerd te worden. Indien reiniging noodzakelijk is, zal het reservoir schoongespoeld moeten worden met een vloeistof, welke gelijk is aan het circulatiesysteem en de koelvloeistof.

De koelvloeistof dient perdiodiek vervangen te worden. Wanneer u werkt met lage temperaturen, zal de concentratie van het water in de koelvloeistof gedurende die tijd toenemen, wat verlies van koelcapaciteit tot gevolg kan hebben.

Periodiek luchtvrij maken van de condensor is noodzakelijk. Het aantal malen dat dit moet gebeuren hangt af van de omgeving waar het apparaat staat opgesteld en gebruikt wordt. Wij raden een algemene maandelijkse inspektie van de condensor na de installatie aan. Na enkele maanden zal duidelijk zijn hoe vaak men het apparaat moet reinigen.

Apparaten met PD en TU pompen hebben een afvoer. Indien vuil aanwezig is in het systeem, zal de afvoer ervoor zorgen dat het materiaal niet in de pomp terecht komt en daardoor de pompleidingen niet beschadigd.

Nadat het apparaat geinstalleerd is, zou de afvoer verstopt kunnen raken. De afvoer zal in de eerste week na de installatie schoongemaakt moeten worden. Nadat dit gebeurd is, is een maandelijkse inspektie aan te raden. Na enkele maanden zal duidelijk zijn hoe vaak men de afvoer moet reinigen.

Alvorens de afvoer te reinigen, gelieve het apparaat uit te schakelen en het reservoir te ledigen.

Kortfattad Bruksanvisning för Vattenkyld HX-serie

Installation
Ställ maskinen i en ren miljö med lätt tillgång till kylningsvatten och ett vattenavlopp. Kylningsvattnet måste möta de krav som är specifierade i instruktionerna annars minskas maskinens prestations förmåga.

Försäkra att spänningen är den samma som den som är given i instruktionerna ±10%.

Röranslutningarna finns på baksidan av maskinen och är märkta "TAP WATER, DRAIN SUPPLY/ RETURN". Ta bort de skyddande plast bitarna. Anslut "TAP WATER" inpassningen till byggnads vattnet och "DRAIN" inpassningen till avloppet. Anslut "SUPPLY" inpassningen till insläppet av din anordning och "RETURN" inpassningen till utsläppet av din anordning.

För att fylla tanken, öppna luckan på den bakre vänstra delen av toppen på maskinen och lösgör skruvarna som håller den undre luckan på plats. Fyll tanken tills 2,5 cm återstår. Var beredd att fylla på om din anordning kräver extra vätska.

Vanligt kran vatten är den rekommenderade vätskan vid en temperatur mellan +8°C och +80°C. Under +8°C måste en vätska som inte fryser användas. En blandning av vanligt vatten och etylenglykol (laboratorie kvalitet) föreslås.

Användning
Innan maskinen startas, kontrollera alla elektriska och alla rör anslutningar. Se till att cirkulations systemen har fyllts med vätska.

Var säker på att byggnads vattnet är påsatt.

På alla modeller från HX-200 till HX-750 måste maskinen vara kopplad till energikällan minst 12 timmar innan användning så att oljan tillåts att värmas upp och separera från köldmedlet.

Sätt start knappen på ON för att starta maskinen. COOL och IDLE på framsidan visar statusen på kylningssystemet. Cool lyser när värme tas bort från köldmedlet. Heat är på när "the hot gas bypass mode" används. När temperaturen närmar sig den förbestämda önskade temperaturen kommer de två att växla.

Vänta 5 minuter innan maskinen sätts på igen efter att ha varit avstängd för att låta kylningstrycken att utjämnas. Ingen kylning kommer att utföras om inte trycken tillåts att utjämnas.

Analog Kontroll, Temperatur Ändring
För att ändra den önskade förbestämda temperaturen, vrid °C knappen på framsidan av maskinen tills den önskade temperaturen är nådd.

Digital Kontroll, Temperatur Ändring
Håll Display knappen intryckt för att visa den önskade temperaturen. Håll Display knappen intryckt och vrid Adjust knappen för att ändra den önskade temperaturen. Släpp Display knappen efter att den önskade temperaturen visas på kontroll panelen. Temperaturen på vätskan i tanken visas nu på kontroll panelen.

Flödeskontroll
"RECIRCULATING FLOW CONTROL" handtaget kontrollerar flödet till din anordning. i "+" positionen får man fullt flöde, "-" positionen innebär inget flöde.

Periodiskt Underhåll
Inspektera vätskan i tanken periodiskt. Om rengöring är nödvändigt, spola tanken med en rengörings vätska som är förenlig med cirkulationssystemet och kylvätskan.

Kylvätskan bör bytas periodvis. När enheten används vid låga temperaturer kommer vätskans koncentration av vatten att öka vilket leder till en minskad kylningskapacitet.

Periodisk rengöring av kondensorn är nödvändig. Hur ofta rengöring är nödvändig beror på miljön. Vi rekommenderar en visuell inspektion av kondensorn varje månad efter installation. Efter flera månader kan det avgöras hur ofta kondensorn måste rengöras i framtiden.

Maskiner med PD och TU pumpar har ett filter. Filtret måste rengöras efter en veckas användning. Efter första rengöringen bör filtret inspekteras varje månad. Efter flera månader kan det avgöras hur ofta filtret måsta rengöras.

Drag ur kontakten och töm tanken innan filtret rengörs.

Kortfattad Bruksanvisning för Luft Kyld HX-serie

Installation
Ställ maskinen så att luft intaget och uttaget inte är blockerade. Otillräcklig ventilation leder till minskad kylningskapacitet och vid vissa tillfällen kan kompressorn gå sönder.

Undvik dammiga områden och rengör maskinen periodvis. För att fungera ordentligt måste mycket luft passera genom kondensorn. Damm och smuts i kondensorn leder till minskad kylnings kapacitet.

Maskinen har full kylningskapacitet upp till en temperatur av +75°F (24°C).

Försäkra att spänningen är den samma som den som är given i instruktionerna ±10%.

För att fylla tanken, öppna luckan på den bakre vänstra delen av toppen på maskinen och lösgör skruvarna som håller den undre luckan på plats. Fyll tanken tills 2,5 cm återstår. Var beredd att fylla på om din anordning kräver extra vätska.

Innan maskinen startas, kontrollera alla elektriska och alla rör anslutningar. Se till att cirkulations systemen har fyllts med vätska.

Användning
Innan maskinen startas, kontrollera alla elektriska och alla rör anslutningar. Se till att cirkulations systemen har fyllts med vätska.

Var säker på att byggnads vattnet är påsatt.

På alla modeller från HX-200 till HX-750 måste maskinen vara kopplad till energikällan minst 12 timmar innan användning så att oljan tillåts att värmas upp och separera från köldmedlet.

Sätt start knappen på ON för att starta maskinen. COOL och IDLE på framsidan visar statusen på kylningssystemet. Cool lyser när värme tas bort från köldmedlet. Heat är på när “the hot gas bypass mode” används. När temperaturen närmar sig den förbestämda temperaturen kommer de två att växla.

Vänta 5 minuter after att maskinen stängts av innan den sätts på igen för att låta kylningstrycken att utjämnas. Ingen kylning kommer att utföras om inte trycken tillåts att utjämnas.

Analog Kontroll, Temperatur Ändring
För att ändra den önskade förbestämda temperaturen, vrid °C knappen på framsidan av maskinen tills den önskade temperaturen är nådd.

Digital Kontroll, Temperatur Ändring
Håll Display knappen intryckt för att visa den önskade temperaturen. Håll Display knappen intryckt och vrid Adjust knappen för att ändra den önskade temperaturen. Släpp Display knappen efter att den önskade temperaturen visas på kontroll panelen. Temperaturen på vätskan i tanken visas nu på kontroll panelen.

Flödeskontroll
“RECIRCULATING FLOW CONTROL” handtaget kontrollerar flödet till din anordning. i “+” positionen får man fullt flöde, “-” positionen innebär inget flöde.

Periodiskt Underhåll
Inspektera vätskan i tanken periodiskt. Om rengöring är nödvändigt, spola tanken med en rengörings vätska som är förenlig med cirkulationssystemet och kylvätskan.

Kylvätskan bör bytas periodvis. När enheten används vid låga temperaturer kommer vätskans koncentration av vatten att öka vilket leder till en minskad kylningskapacitet.

Periodisk rengöring av kondensorn är nödvändig. Hur ofta rengöring är nödvändig beror på miljön. Vi rekommenderar en visuell inspektion av kondensorn varje månad efter installation. Efter flera månader kan det avgöras hur ofta kondensorn måste rengöras i framtiden.

Maskiner med PD och TU pumpar har ett filter. Filtret måste rengöras efter en veckas användning. Efter första rengöringen bör filtret inspekteras varje månad. Efter flera månader kan det avgöras hur ofta filtret måsta rengöras.

Innan filtret rengörs, drag ur kontakten och töm tanken.

NOTICE D'UTILISATION
REFROIDISSEURS TYPE HX VERSION *AIR*

NINSTALLATION
Ces appareils ont un système de réfrigération refroidi par air. L'air est aspiré sur le devant et rejeté à l'arrière et sur les côtés

Positionner l'appareil afin que l'admission et l'émission ne soient pas obstruées. Une ventilation insuffisante serait la cause d'une réduction de la capacité de refroidissement, voire, d'une défaillance du compresseur.

Dans une zone excessivement poussièreuse, le nettoyage périodique est recommandé. En mode de fonctionnement, l'appareil aspire de l'air à travers le condenseur. De la poussière et des particules sur la grille atténueraient sa capacité de refroidissement.

L'appareil conserve sa pleine puissance de refroidissement sur une plage de température allant de l'ambiante à + 24°C.

S'assurer que l'alimentation électrique soit celle requise à ±10%.

Les connections, d'un diamètre 0.75 pouce FPT, sont situées à l'arrière de l'appareil et sont référencées " SUPPLY " et " RETURN ".. Retirer les embouts plastiques. Connecter le tuyau enfiché sur " SUPPLY " vers l'entrée de l'équipement et celui sur " RETURN " vers la sortie.

Pour remplir le réservoir, ôter la tape à l'aide des deux vis. Dévisser le bouchon et remplir le réservoir avec un liquide approprié. L'eau du robinet est recommandée pour un fonctionnement entre + 8 °C et + 30°C; à une température inférieure, mieux vaut rajouter du glycol-éthylène.

MISE EN ROUTE
Vérifier les connections électriques, les tuyaux d'eau et le niveau de remplissage du liquide. Sur les modèles HX 200 à HX 750, il faut alimenter l'appareil 12 heures avant pour chauffer et séparer l'huile du refrigérant.

Mettre en route en appuyant sur " ON ". Un voyant s'allume qui indique que l'appareil est en fonctionnement. Pour l'éteindre, appuyer sur " OFF ".

Les voyants LED " Cool " et " IDLE " indiquent le mode de fonctionnement du système de réfrigération. " Cool " est allumé quand l'appareil évacue la chaleur du fluide, " HEAT " est allumé quand l'appareil est en mode de " By-pass ". Quand la température obtenue approche de la température souhaitée, le voyant s'allume et s'éteint.

Après avoir éteint l'appareil, attendre environ cinq minutes avant de le rallumer, pour un bon équilibrage des pressions.Autrement, le cycle au niveau du compresseur serait trop bref et le refroidissement n'aurait pas lieu.

REGLAGE DU CONTROLEUR DE TEMPERATURE ANALOGIQUE
Tourner le potentiomètre situé à l'avant jusqu'à ce que la température désirée coïncide avec la graduation.

REGLAGE DU CONTROLEUR DE TEMPERATURE NUMERIQUE
Pour afficher la température souhaitée, maintenir appuyé l'interrupteur et tourner le bouton de réglage jusqu'à ce que la température souhaitée soit affichée. Relâcher ensuite l'interrupteur. L'affichage indique alors la température du fluide dans le réservoir.

CONTROLEUR DE DEBIT
La poignée " Recirculating Flow conrol " règle le débit de recirculation. En position " + ", votre application reçoit un débit maximum; en position " - ", il n'y a plus de débit.

MAINTENANCE PREVENTIVE
Vérifier régulièrement le niveau du réservoir,

Changer de temps à autre le liquide utilisé,

En cas de nettoyage, rincer avec un produit de lavage compatible,

Aux basses températures, la concentration en eau a tendance à augmenter ce qui peut générer une perte de puissance de refroidissement,

Avant de changer de liquide, recirculer à une température plus élevée pour réchauffer le serpentin,

Nettoyer régulièrement selon les conditions de travail la grille d'aspiration. Nous recommandons d'effectuer la première inspection du condenseur un mois après l'installation,

Les modèles fonctionnant avec des pompes type PD ou TU sont équipés d'un filtre qui retient les impuretés. Il est recommandé de nettoyer ce filtre après la première semaine et, ensuite, une fois par mois. Ce nettoyage s'effectue après avoir débranché l'appareil et vidangé le réservoir

NOTICE D'UTILISATION
REFROIDISSEURS TYPE HX VERSION EAU

INSTALLATION
Installer l'appareil dans un environnement propre avec un accès facile à une arrivée d'eau. Cette source d'eau doit correspondre à ce qui est spécifié dans la notice pour ne pas altérer les performances de l'équipement. Une source non conforme pourrait causer une surchauffe du compresseur et un arrêt de l'appareil.

S'assurer que la tension électrique soit celle requise à ±10 %.

Les connections sont situées à l'arrière et référencées :
" TAP WATER "
" DRAIN "
" SUPPLY "
" RETURN "

Retirer les embouts plastique. Connecter le " Tap water " vers l'arrivée d'eau ; le " Drain " au robinet; " Supply " vers l'entrée de votre application et le " Return " à la sortie.

Utiliser un fluide antigel dont la viscosité doit être inférieure à 50 centistokes à la température la plus basse.

Pour remplir le réservoir, ouvrir la tape en haut à gauche et retirer le couvercle en dévissant. Remplir jusqu'à 1 " pouce " du sommet (niveau). Si le volume total à refroidir est important, il convient d'avoir une réserve de fluide immédiatement disponible sous la main pour ne pas désamorcer la pompe.

MISE EN ROUTE
Vérifier les connections électriques, les tuyaux d'eau et le niveau de remplissage du liquide. Sur les modèles HX 200 à HX 750, il faut alimenter l'appareil 12 heures avant pour chauffer et séparer l'huile du refrigérant.

Mettre en route en appuyant sur " ON ". Un voyant s'allume qui indique que l'appareil est en fonctionnement. Pour l'éteindre, appuyer sur " OFF ".

Les voyants LED " Cool " et " IDLE " indiquent le mode de fonctionnement du système de réfrigération. " Cool " est allumé quand l'appareil évacue la chaleur du fluide, " HEAT " est allumé quand l'appareil est en mode de " By-pass ". Quand la température obtenue approche de la température souhaitée, le voyant s'allume et s'éteint.

Après avoir éteint l'appareil, attendre environ cinq minutes avant de le rallumer, pour un bon équilibrage des pressions.Autrement, le cycle au niveau du compresseur serait trop bref et le refroidissement n'aurait pas lieu.

REGLAGE DU CONTROLEUR DE TEMPERATURE ANALOGIQUE
Tourner le potentiomètre situé à l'avant jusqu'à ce que la température désirée coïncide avec la graduation.

REGLAGE DU CONTROLEUR DE TEMPERATURE NUMERIQUE
Pour afficher la température souhaitée, maintenir appuyé l'interrupteur et tourner le bouton de réglage jusqu'à ce que la température souhaitée soit affichée. Relâcher ensuite l'interrupteur. L'affichage indique alors la température du fluide dans le réservoir.

CONTROLEUR DE DEBIT
La poignée " Recirculating flow control " règle le débit de recirculation. En position " + ", votre application reçoit un débit maximum; en position " - ", il n'y a plus de débit.

MAINTENANCE PREVENTIVE
Changer de temps à autre le liquide utilisé,

Aux basses températures, la concentration en eau a tendance à augmenter ce qui peut générer une perte de puissance de refroidissement,

Avant de changer de liquide, recirculer à une température plus élevée pour réchauffer le serpentin,

Nettoyer régulièrement selon les conditions de travail la grille d'aspiration. Nous recommandons d'effectuer la première inspection du condenseur un mois après l'installation,

Les modèles fonctionnant avec des pompes type PD ou TU sont équipés d'un filtre qui retient les impuretés. Il est recommandé de nettoyer ce filtre après la première semaine et, ensuite, une fois par mois. Ce nettoyage s'effectue après avoir débranché l'appareil et vidangé le réservoir

PROCEDIMIENTOS DE OPERACION DE REFERENCIA RAPIDA PARA LA SERIE HX REFRIGERADA POR AGUA

INSTALACION
Sitúe la unidad en un entorno limpio con fácil acceso a la instalación de agua de enfriamiento y un desagüe. Los requerimientos de la instalación de agua deben adaptarse a las especificadas en el manual de instrucciones o el funcionamiento de la unidad se verá mermado. Un suministro de agua inadecuado podría causar que el compresor se sobrecalentara y se apagara la unidad.

Asegúrese de que el voltaje de la fuente de energía sea igual que el voltaje especificado, ±10%.

Las conexiones de tuberías están situadas en la parte trasera de la unidad y están marcadas como TAP WATER, DRAIN, SUPPLY y RETURN. Saque los protectores de plástico de todas las conexiones de tuberías. Conecte el adaptador TAP WATER a la instalación de agua de enfriamiento y el adaptador DRAIN a un desagüe. Conecte el adaptador SUPPLY a la entrada de su aplicación y el adaptador RETURN a la salida de su aplicación.

Para llenar el reservorio, abra el panel de acceso situado en la esquina trasera izquierda del tope de la caja y saque la tapa del reservorio desatornillando los tornillos. Llene el reservorio hasta una pulgada del tope. Si la capacidad de fluido de su aplicación y las lineas de recirculación son significativas, tenga fluido extra a mano.

Se recomienda el agua corriente como fluido para operar desde +8 ºC hasta +80 ºC. Por debajo de +8 ºC, debe utilizarse un fluido no congelador. Sugerimos una mezcla de agua corriente y etileno glicol de grado laboratorio.

OPERACION
Antes de poner en marcha la unidad, compruebe todas las conexiones eléctricas y de tuberías. Asegúrese de que el sistema circulador se ha llenado con fluido refrigerante.

En los modelos HX-200 hasta HX-750, la unidad debe conectarse a la red de energía durante al menos 12 horas para permitir que el aceite se caliente y se separe del refrigerante.

Para poner en marcha la unidad, ponga el interruptor de encendido en posición ON. Los LED Cool y Idle del panel frontal indican la situación del sistema de refrigeración. Cool está en marcha cuando la unidad está eliminando calor del fluido de enfriamiento. Heat está en marcha cuando la unidad está en el modo by-pass gas caliente. A medida que la temperatura de funcionamiento se aproxima al punto fijado, el LED ciclará.

Cuando se apaga la unidad, espere aproximadamente cinco minutos antes de volver a ponerla en marcha para permitir que las presiones de refrigeración se ecualicen. Si no se permite ecualizarse las presiones, el compresor se cortocicuitará y no enfriará.

AJUSTE DE LA TEMPERATURA CON EL CONTROLADOR ANALOGICO
Para fijar el punto de ajuste de la temperatura, gire el dial ºC situado en el frontal de la unidad hasta la temperatura deseada.

AJUSTE DE LA TEMPERATURA CON EL CONTROLADOR DIGITAL
Para que el punto de ajuste de temperatura aparezca en pantalla, mantenga presionado el interruptor DISPLAY. Para fijar el punto de ajuste de temperatura, mantenga presionado el interruptor DISPLAY y gire el botón ADJUST hasta que la pantalla digital indique el punto de ajuste de temperatura deseado. Una vez fijado el punto de ajuste, suelte el interruptor DISPLAY. La pantalla indicará la temperatura del fluido en el reservorio.

CONTROL DE FLUJO
El mango RECIRCULATING FLOW CONTROL controla la escala de flujo a su aplicación. En la posición + recibirá flujo completo, en la posición - no hay flujo.

MANTENIMIENTO PERIODICO

Inspeccione periódicamente el fluido del reservorio. Si es necesaria una limpieza, rocíe el reservorio con un fluido de limpieza compatible con el sistema de circulación y el fluido refrigerante.

El fluido refrigerante debe sustituirse periódicamente. Cuando se funciona a baja temperatura, la concentración de agua en el fluido refrigerante aumentará con el tiempo, ocasionando una pérdida de capacidad refrigerante.

Es necesario un vaciado periódico de las aletas del condensador. La frecuencia de limpieza depende del entorno en que funciona el aparato. Recomendamos una inspección visual mensual del condensador después de la instalación inicial. Después de varios meses, quedará establecida la frecuencia de limpieza.

Las unidades con bombas PD y TU tienen un filtro. Si hay residuos en el sistema, el filtro prevendrá que el material entre en la bomba y dañe las paletas de la bomba.

Después de la instalación inicial, el filtro puede bloquearse. El filtro debe limpiarse después de la primera semana de la instalación. Después de esta primera limpieza, se recomienda una inspección visual mensual. Después de varios meses, se establecerá la frecuencia de limpieza.

Antes de limpiar el filtro, desenchufe el aparato y vacíe el reservorio.

PROCEDIMIENTOS DE OPERACION DE REFERENCIA RAPIDA PARA LA SERIE HX REFRIGERADA POR AIRE

INSTALACION

Sitúe la unidad para no impedir la entrada y descarga. Una ventilación inadecuada causará una reducción en la capacidad de enfriamiento y, en casos extremos, un fallo en el compresor.

Deben evitarse las zonas excesivamente polvorientas y debe instituirse un calendario de limpiezas periódicas. Para un funcionamiento adecuado, la unidad necesita empujar una cantidad sustancial de aire a través de un condensador. Un cúmulo de polvo o residuos en las aletas del condensador ocasionaría una pérdida de capacidad de enfriamiento.

La unidad retendrá su capacidad completa en temperaturas ambiente de hasta aproximadamente + 75 ºF.

Asegúrese de que el voltaje de la fuente de energía sea igual que el voltaje especificado, ±10%.

Las conexiones de tuberías están situadas en la parte trasera de la unidad y están marcadas como SUPPLY y RETURN. Estas conexiones son 3/4" FPT. Saque los protectores de plástico de ambas conexiones de tuberías. Conecte el adaptador SUPPLY en la entrada de su aplicación. Conecte el adaptador RETURN a la salida de su aplicación.

Para llenar el reservorio, abra el panel de acceso situado en la esquina trasera izquierda del tope de la caja y saque la tapa del reservorio desatornillando los tornillos. Llene el reservorio hasta una pulgada del tope. Si la capacidad de fluido de su aplicación y las lineas de recirculación son significativas, tenga fluido extra a mano.

Se recomienda el agua corriente como fluido para operar desde +8 ºC hasta +80 ºC. Por debajo de +8 ºC, debe utilizarse un fluido no congelador. Sugerimos una mezcla de agua corriente y etileno glicol de grado laboratorio.

OPERACION

Antes de poner en marcha la unidad, compruebe todas las conexiones eléctricas y de tuberías. Asegúrese de que el sistema circulador se ha llenado con fluido refrigerante.

En los modelos HX-200 hasta HX-750, la unidad debe conectarse a la red de energía durante al menos 12 horas para permitir que el aceite se caliente y se separe del refrigerante.

Para poner en marcha la unidad, ponga el interruptor de encendido en posición ON. Los LED Cool y Idle del panel frontal indican la situación del sistema de refrigeración. Cool está en marcha cuando la unidad está eliminando calor del fluido de enfriamiento. Heat está en marcha cuando la unidad está en el modo by-pass gas caliente. A medida que la temperatura de funcionamiento se aproxima al punto fijado, el LED ciclará.

Cuando se apaga la unidad, espere aproximadamente cinco minutos antes de volver a ponerla en marcha para permitir que las presiones de refrigeración se ecualicen. Si no se permite ecualizarse las presiones, el compresor se cortocicuitará y no enfriará.

AJUSTE DE LA TEMPERATURA CON EL CONTROLADOR ANALOGICO

Para fijar el punto de ajuste de la temperatura, gire el dial ºC situado en el frontal de la unidad hasta la temperatura deseada.

AJUSTE DE LA TEMPERATURA CON EL CONTROLADOR DIGITAL

Para que el punto de ajuste de temperatura aparezca en pantalla, mantenga presionado el interruptor DISPLAY. Para fijar el punto de ajuste de temperatura, mantenga presionado el interruptor DISPLAY y gire el botón ADJUST hasta que la pantalla digital indique el punto de ajuste de temperatura deseado. Una vez fijado el punto de ajuste, suelte el interruptor DISPLAY. La pantalla indicará la temperatura del fluido en el reservorio.

CONTROL DE FLUJO
El mango RECIRCULATING FLOW CONTROL controla la escala de flujo a su aplicación. En la posición + recibirá flujo completo, en la posición - no hay flujo.

MANTENIMIENTO PERIODICO
Inspeccione periódicamente el fluido del reservorio. Si es necesaria una limpieza, rocíe el reservorio con un fluido de limpieza compatible con el sistema de circulación y el fluido refrigerante.

El fluido refrigerante debe sustituirse periódicamente. Cuando se funciona a baja temperatura, la concentración de agua en el fluido refrigerante aumentará con el tiempo, ocasionando una pérdida de capacidad refrigerante.

Es necesario un vaciado periódico de las aletas del condensador. La frecuencia de limpieza depende del entorno en que funciona el aparato. Recomendamos una inspección visual mensual del condensador después de la instalación inicial. Después de varios meses, quedará establecida la frecuencia de limpieza.

Las unidades con bombas PD y TU tienen un filtro. Si hay residuos en el sistema, el filtro prevendrá que el material entre en la bomba y dañe las paletas de la bomba.

APPENDIX B 380V WYE MODIFICATION.

Refer to the serial number label on the rear of the unit for the specific electrical requirements of your unit.

For personal safety and equipment reliability, the following procedure should only be performed by a qualified service technician familiar with the safety precautions required for working inside an energized disconnect box.

Electrical connections are made in the electrical enclosure at the rear of the unit. Remove one of the “knock-outs” from the wall of the enclosure and install a conduit connector. Connect the line cord to the main contactor terminals labelled L1, L2, and L3. Connect the neutral wire (N) to the single pole terminal block labelled N. Connect the ground wire (G) to the grounding stud.

NOTE: Not all units require a neutral connector. Refer to the unit's serial number label on the rear of the unit and to your facility power source availability. Units not requiring a neutral connector use the same connection procedures except there will be no neutral wire or single pole terminal block.

NOTE: The HX-750 380/480V model contains a three phase condenser fan motor. It is possible to misconnect the main power and have the motor turn in the wrong direction resulting in incorrect airflow over the condenser. Proper airflow is achieved by exchanging any two main power connectors.

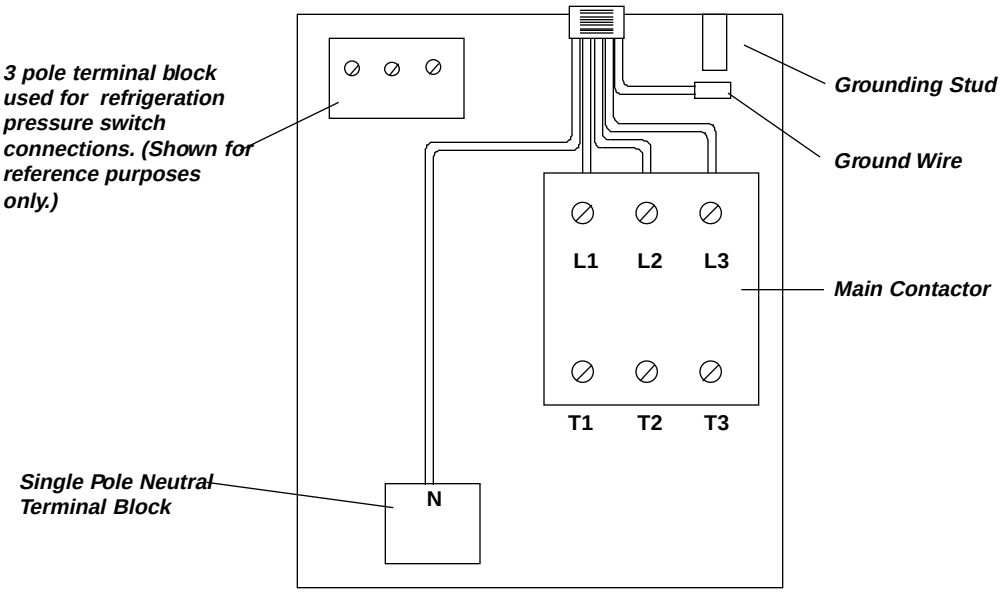

WARRANTY

NESLAB Instruments, Inc. warrants for 12 months from date of shipment any NESLAB unit according to the following terms.

Any part of the unit manufactured or supplied by NESLAB and found in the reasonable judgment of NESLAB to be defective in material or workmanship will be repaired at an authorized NESLAB Repair Depot without charge for parts or labor. The unit, including any defective part must be returned to an authorized NESLAB Repair Depot within the warranty period. The expense of returning the unit to the authorized NESLAB Repair Depot for warranty service will be paid for by the buyer. NESLAB's responsibility in respect to warranty claims is limited to performing the required repairs or replacements, and no claim of breach of warranty shall be cause for cancellation or recision of the contract of sales of any unit.

With respect to units that qualify for field service repairs, NESLAB's responsibility is limited to the component parts necessary for the repair and the labor that is required on site to perform the repair. Any travel labor or mileage charges are the financial responsibility of the buyer.

The buyer shall be responsible for any evaluation or warranty service call (including labor charges) if no defects are found with the NESLAB product.

This warranty does not cover any unit that has been subject to misuse, neglect, or accident. This warranty does not apply to any damage to the unit that is the result of improper installation or maintenance, or to any unit that has been operated or maintained in any way contrary to the operating or maintenance instructions specified in NESLAB's Instruction and Operation Manual. This warranty does not cover any unit that has been altered or modified so as to change its intended use.

In addition, this warranty does not extend to repairs made by the use of parts, accessories, or fluids which are either incompatible with the unit or adversely affect its operation, performance, or durability.

NESLAB reserves the right to change or improve the design of any unit without assuming any obligation to modify any unit previously manufactured.

THE FOREGOING EXPRESS WARRANTY IS IN LIEU OF ALL OTHER WARRANTIES, EXPRESSED OR IMPLIED, INCLUDING BUT NOT LIMITED TO WARRANTIES OR MERCHANTABILITY AND FITNESS FOR A PARTICULAR PURPOSE.

NESLAB'S OBLIGATION UNDER THIS WARRANTY IS STRICTLY AND EXCLUSIVELY LIMITED TO THE REPAIR OR REPLACEMENT OF DEFECTIVE COMPONENT PARTS AND NESLAB DOES NOT ASSUME OR AUTHORIZE ANYONE TO ASSUME FOR IT ANY OTHER OBLIGATION.

NESLAB ASSUMES NO RESPONSIBILITY FOR INCIDENTAL, CONSEQUENTIAL, OR OTHER DAMAGES INCLUDING, BUT NOT LIMITED TO LOSS OR DAMAGE TO PROPERTY, LOSS OF PROFITS OR REVENUE, LOSS OF THE UNIT, LOSS OF TIME, OR INCONVENIENCE.

This warranty applies to units sold in the United States. Any units sold elsewhere are warranted by the affiliated marketing company of NESLAB Instruments, Inc. This warranty and all matters arising pursuant to it shall be governed by the law of the State of New Hampshire, United States. All legal actions brought in relation hereto shall be filed in the appropriate state or federal courts in New Hampshire, unless waived by NESLAB.

NESLAB ONLINE

intranet - bbs

dial (603) 427-2490 via modem

Free software! Free access to 24-hour service data

No subscription fees. (Your only expense is the modem call.)

service data

electronic mail

fax on demand

intranet access

13 languages

NESLAB ONLINE is your source for immediate service data, including service bulletins, refrigerant charging information, calibration instructions, and more for all catalog units. Now you can browse the same database our Technical Support representatives use - and this is available 24 hours a day, 7 days a week. NESLAB ONLINE is also your link into our e-mail system, news system, and technical reference library. All it takes is a Macintosh or Windows computer and modem. Please return the coupon for a copy of FirstClass Client - the software used to access the NESLAB ONLINE server. There are no restrictions on the duplication of FirstClass Client - it may be installed on multiple machines.

Download from sources on reverse side of page,
or request by e-mail to **neslab@lifesciences.com**
Specify which computer system you use.

NESLAB ONLINE
PO Box 1178
Portsmouth NH 03802-1178

Please send me software for NESLAB ONLINE !

☐ Macintosh® Mac OS

☐ WINDOWS 3.x '95

Name _____

Address _____

City _____

State / Province _____

Zip / Postal code _____

e-mail address (optional) _____

protocol: 8-N-1
minimum speed: 1200 baud
maximum speed: 28800 baud
file transfer size: unlimited

voice/info: (800) 4NESLAB
fax: (603) 436-8411

system administrators
Jerry Boyle x6321
Mike Duzak x6159
Rick Mills x2267

Newton

Also available for Newton. Call for details.

Instant online service data access 24 hours a day - anytime, anywhere

NESLAB ONLINE

intranet - bbs

NESLAB ONLINE is a public intranet-bbs (bulletin board system) installed to provide automated service documentation 24 hours a day, seven days a week. It is installed and used just like any of the commercial bbs systems (America Online, Prodigy, CompuServe, etc). Our system software is "FirstClass®". The software required to connect to us (the FirstClass Server) is "FirstClass Client". It is available in both Macintosh and Windows versions. It may be obtained from many public sources. There are no restrictions on copying it. It is freely distributable.

Why did NESLAB choose FirstClass? It is the only intranet-bbs software we found that provided full graphical access (that means icons and point-and-click) as well as universal access from DOS / Windows / Macintosh / Newton computers whether connected by modem or NESLAB's internal network.

Newton

Newton compatible.

Some sources for FirstClass Client

What computer system do you have?

What can you currently access?

	Macintosh® Mac OS	Windows 3.x '95
CD-ROM	1. Companion CD-ROM to book "Macintosh Revelations" by Ken Maki 2. Companion CD-ROM to magazine "MacAddict", September 1996 issue 3. Any BMUG software / shareware CD-ROM	Look in the "Communications" ,"Telecom", or "BBS" directories of many software / shareware collections.
America Online	Go to keyword: SoftArc then select "FirstClass software"	Go to keyword: SoftArc then select "FirstClass software"
CompuServe	Download from: TWEUROPA / Teletools / FCMAC.ZIP	Download from: PCBBS / BBS Programs / FCC300.EXE
World Wide Web	Download from: http:// www.softarc.com / try.htm	Download from: http:// www.softarc.com / try.htm
None of the above. I need a disk.	Request "FirstClass Client for Macintosh" from us using the mail-in coupon.	Request "FirstClass Client for Windows" from us using the mail-in coupon.

Note to Prodigy users: We tried. We checked with Prodigy but they do not have FirstClass Client available for download. FirstClass® is a trademark of SoftArc of Canada. Macintosh® and Newton® are trademarks of Apple Computer, Inc. Windows® is a trademark of Microsoft Corporation. America Online logo is a service mark of America Online, Inc. CompuServe logo is a service mark of CompuServe, Inc. Netscape® logo used in World Wide Web illustration is a trademark of Netscape Communications, Inc.

Contents

General Information

After Sale Support 2
CAUTION 5
Theory of operation 6
Cool mode 6
Heat/idle mode 7

Troubleshooting

Troubleshooting Chart: Runaway cold 8
Troubleshooting Chart: Runaway hot 9
Troubleshooting Chart: Weak cooling 10
Troubleshooting Chart: Refrigeration pressures 12

Replacement

Compressor 13
Fan Motor 15
Filter/dryer 16
Solenoid valve 17
Tank coil assembly (TCA) 19
Water regulating valve 23
Refrigeration components (general) 25

Procedures

Speed check 27
Suction Discharge pressure and speed check 28
Condenser maintenance (air cooled & water cooled) 29
Flushing (closed facility system) 29
Flushing (tap water system) 30
Flushing (unit off) 31
Commercial flushing chemicals 32
Hot gas valve (Automatic Discharge Relief (ADR)) 33
Schrader valves 36
Leak test and repair of leak 36
Solenoid coil test 38
Solenoid valve rebuild 39
Tank Coil Assembly (TCA) failure and repair 41

Contents continued

Water regulating valve setting 42

Reference

Refrigeration Specifications 43
R22 pressure - temperature chart 44
Heat load calculation 45
Condenser requirements: Air cooled units 46
Condenser requirements: Water cooled units 47
15 pin accessory connector (Optional) pinout 49
Part numbers 50

Diagrams

HX-200 Call out drawings 57
HX-300 Call out drawings 60
HX-500 Call out drawings 64
HX-750 Call out drawings 68
HX-200 to 750 Air cooled Flow diagram (R22) 72
HX-200 to 750 Water cooled Flow diagram (R22) 73
Pump flow diagram (CP - PD - TU type pumps) 74

After Sale Support

NESLAB is committed to customer service both during and after the sale. If you have questions concerning the operation of your unit, contact our Sales Department. If your unit fails to operate properly, or if you have questions concerning spare parts or service contacts, contact our Service Department. Before calling, please obtain the following information from the unit's serial number label:

part number:
serial number:



CAUTION

This section is intended for use by qualified refrigeration technicians only. Servicing refrigeration systems is hazardous and must be performed only by qualified persons.

Refrigeration systems contain various hazards, including (but not limited to) the following:

1. Refrigeration systems contain refrigerant gases at very high pressures, even when not running.

2. Sudden release of refrigerant gases will result in rapid expansion and severe frostbite hazard. Refrigerant gases will cause severe injury to unprotected flesh.

3. Refrigerant gases are not flammable and are chemically inert. However, they are heavier than air and will displace oxygen. They can cause suffocation if released in a confined area.

4. Refrigerant gases used in this product are classified as Ozone Depleting Chemicals by the US Environmental Protection Agency. While they pose no hazard sealed inside the refrigeration system, intentional release into the atmosphere is outlawed under the 1990 Clean Air Act.

5. Compressor start and run capacitors store hazardous levels of electricity, even when the unit is not running or plugged in.

6. Refrigeration system components operate at high temperatures and present a severe burn hazard.

THEORY OF OPERATION

The chiller operates in two modes: COOL or HEAT/IDLE. The controller compares setpoint to actual temperature and decides which mode is required. This is a thermostatic (not proportional) control system. The compressor, pump, and fan motor all run continuously, regardless of mode.

The thermal transfer of the HEAT/IDLE mode is not as efficient as the COOL mode. This results in units running at little or no load to spend most of their time in the HEAT/IDLE mode with brief periodic COOL periods. A duty cycle of 20% COOL / 80% HEAT/IDLE may be typical for units running under no load. This duty cycle will reverse as increasing load is applied, reaching 100% COOL / 0% HEAT/IDLE at full load.

This system results in tighter temperature control than continually cycling the compressor on and off, as is typical in a household refrigerator.

The default mode is HEAT/IDLE. A failure of the temperature sensor or controller will generally result in the HEAT/IDLE mode. This prevents a possible freezing of the cooling fluid and resulting damage from fluid expansion.

COOL MODE

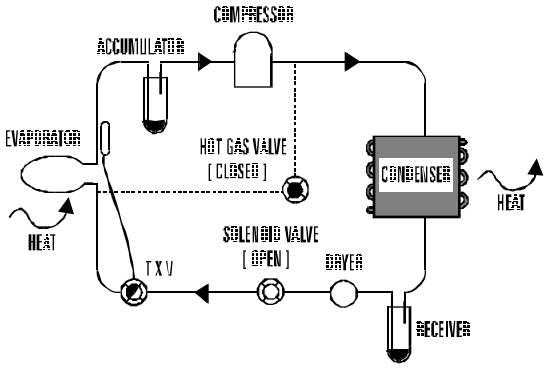

If the setpoint is below the actual temperature, the controller is in COOL mode. The controller triac output provides a closure to supply line voltage to the solenoid coil. The solenoid valve, which is normally-closed, is then pulled open by the coil and a standard refrigeration cooling loop exists.

Refrigerant, as a gas, is pressurized in the compressor. It then enters the condenser and changes to a liquid due to the cooling provided by the fan and condenser fins. Heat is given up to the air at this point. The liquid refrigerant exits the condenser and passes through a filter/dryer which traps contaminants and absorbs any water moisture in its desiccant element. The refrigerant then passes through the open solenoid valve and enters the capillary tube. The restriction of the tube meters the flow. The capillary tube ends at the evaporator.

The evaporator is a coil located inside the fluid tank. As the liquid refrigerant encounters the increased volume of the evaporator, it expands tremendously, changing from a liquid to a gas, and absorbing heat from the fluid (cooling it) in the process. The refrigerant, now a gas, exits the evaporator and passes through the suction filter. The refrigerant then enters the compressor at low pressure and is re-compressed.

HEAT/IDLE MODE

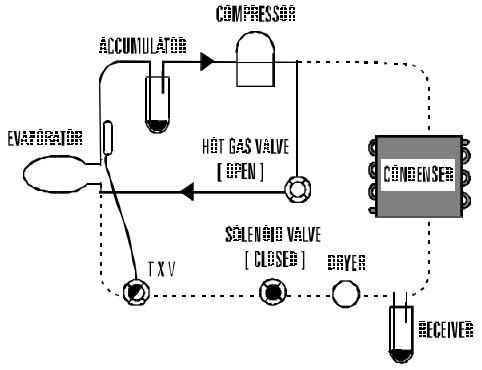

If the setpoint is above the actual temperature, the controller is in HEAT/IDLE mode. The triac output opens, turning the solenoid coil off. The solenoid valve then drops closed. This stops the flow of refrigerant at that point. The resulting increase in discharge pressure causes the Hot Gas (also known as an ADR, or Automatic Discharge Relief) valve to open. The refrigerant gas is now routed directly to the evaporator. The gas is not allowed to condense, as it has bypassed the condenser completely. The hot gas passing through the evaporator coil adds some heat to the fluid, then returns directly through the suction filter to the compressor. This unloads the compressor, resulting in lower discharge pressure, higher suction pressure, and less power consumption. Observing the suction pressure in this mode will indicate the setting of the Hot Gas (ADR) valve.

Troubleshooting Chart: Runaway cold

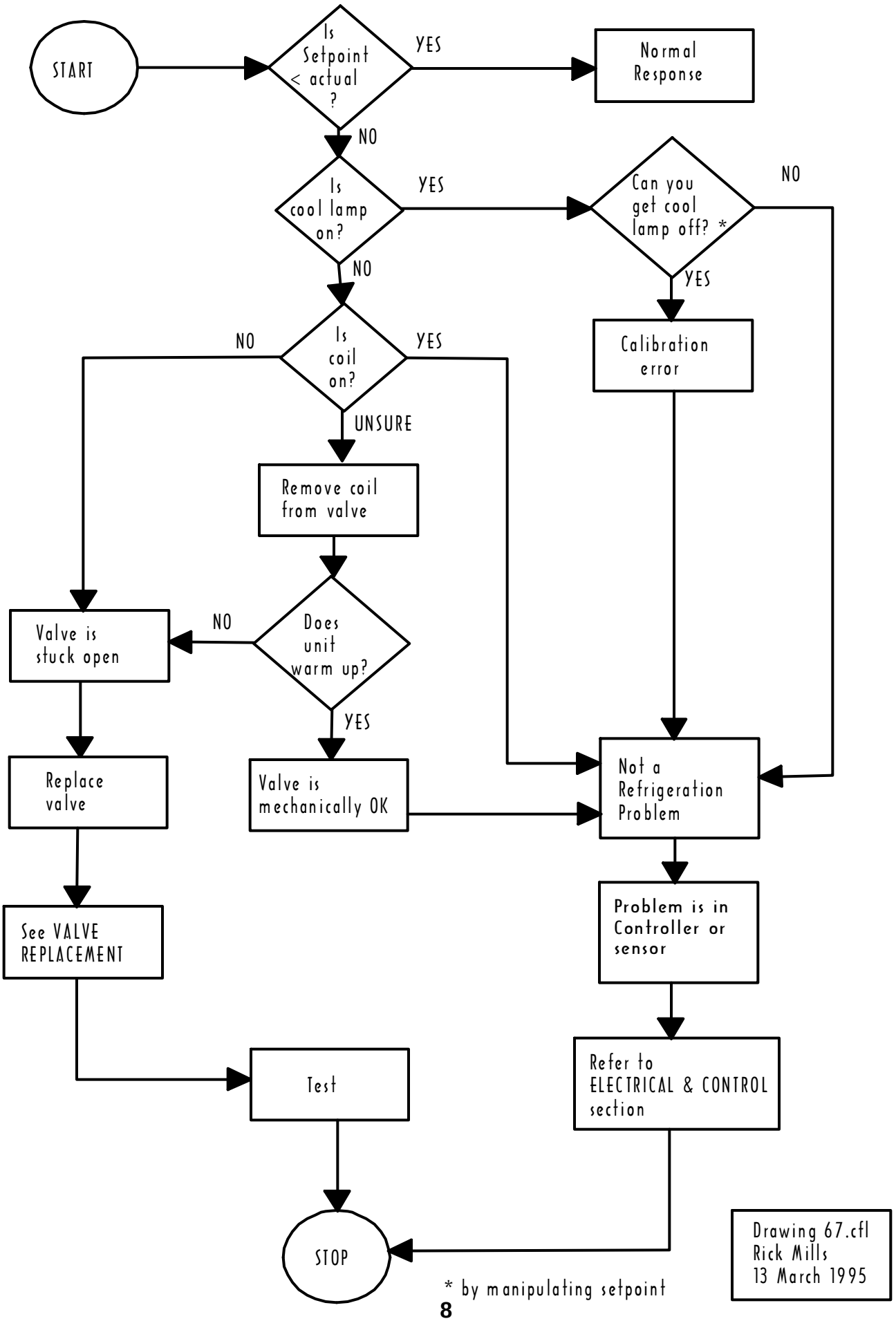

Troubleshooting Chart: Runaway hot

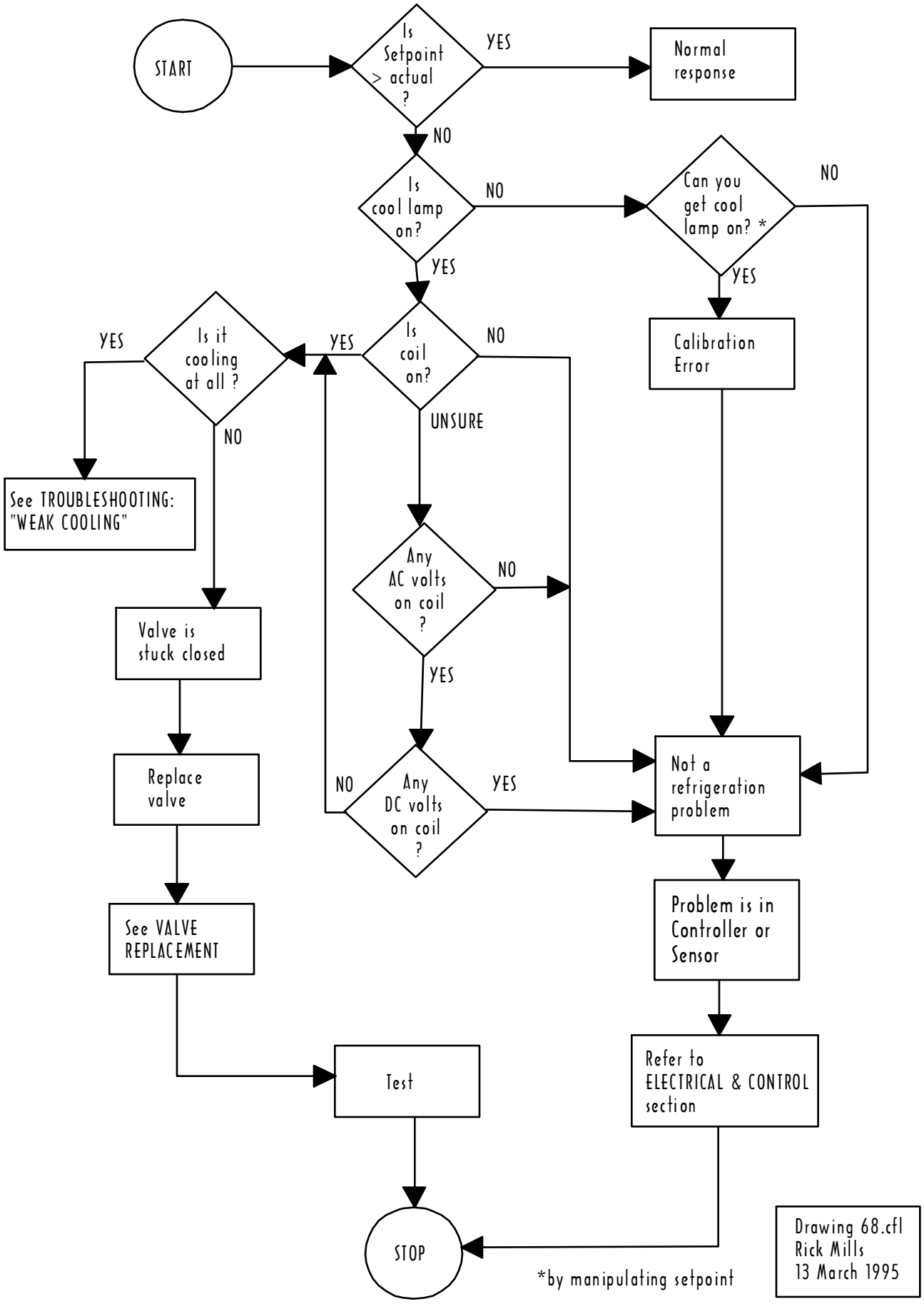

Troubleshooting Chart: Weak cooling

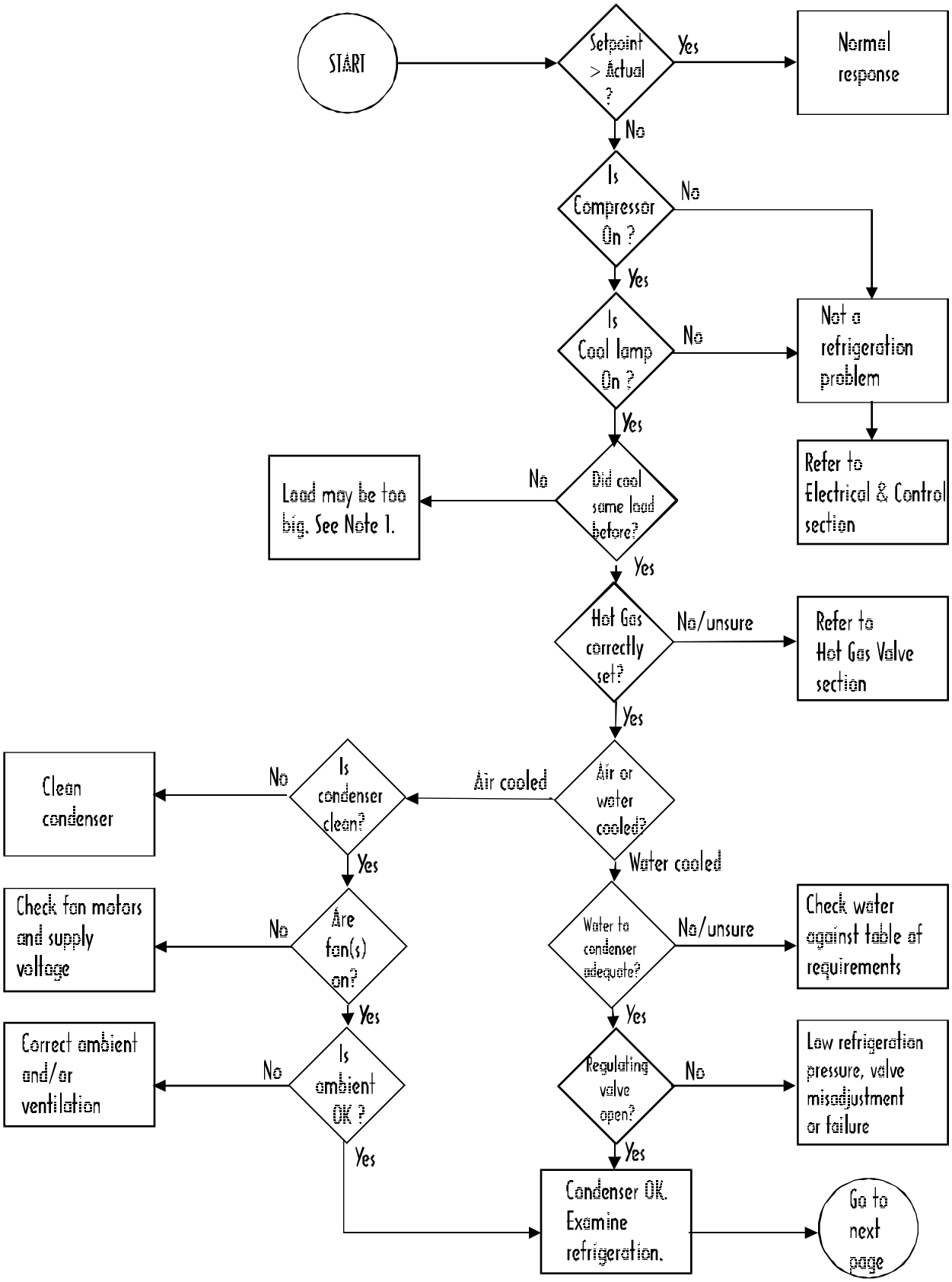

Note 1: Compare load size to HX catalog spec. If load size unknown, determine using heat load formula.

Drawing 5193a.cdr
Rick Mills
14 Mar 1995

Troubleshooting Chart: Weak cooling continued

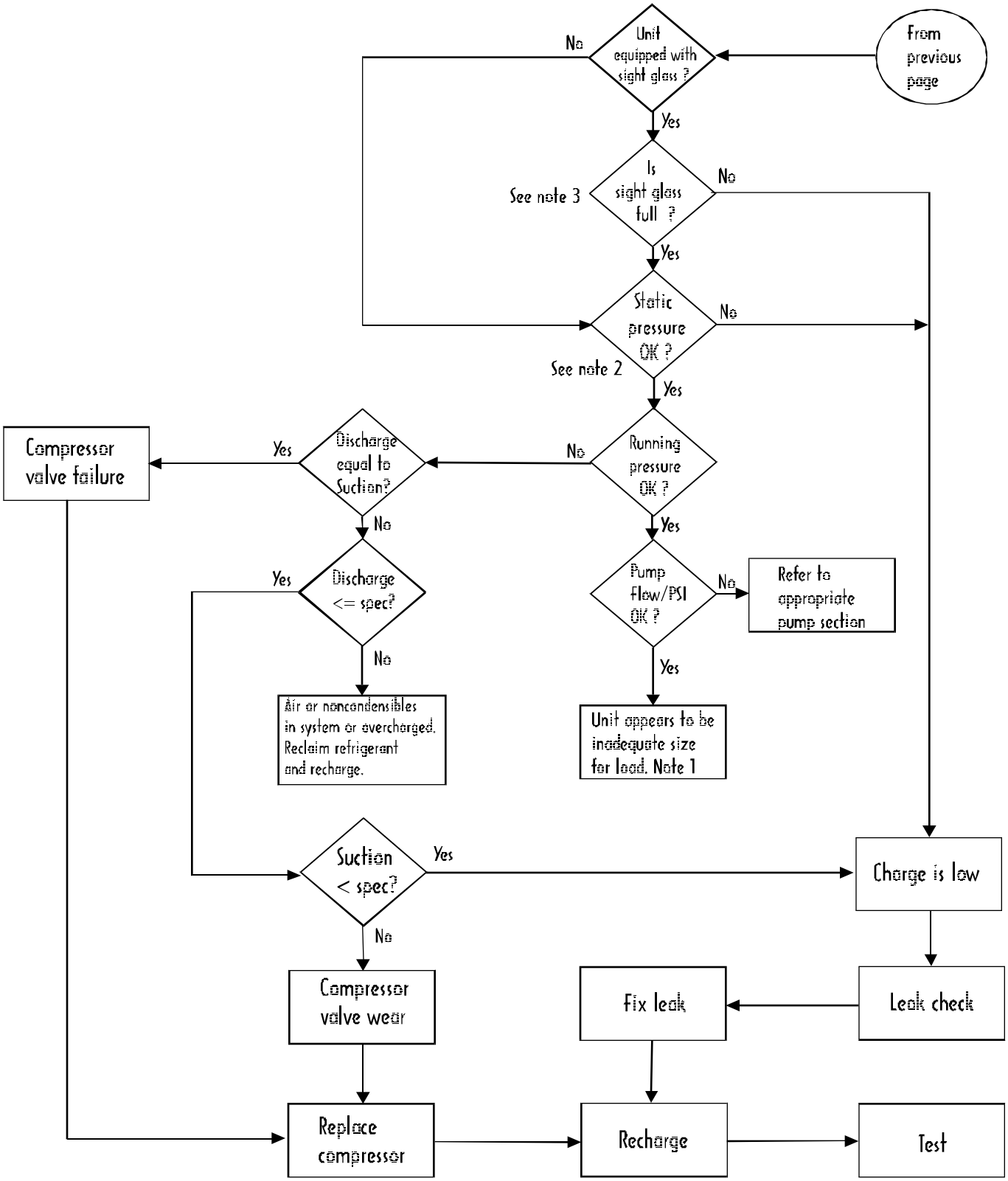

Note 1: Compare load size to HX catalog spec. If load size unknown, determine using heat load formula.
Note 2: Refer to Temperature/pressure chart.
Note 3: Sight glass should fill with liquid upon entering cool cycle, and empty shortly after entering heat cycle.

Drawing 5193b.cdr
Rick Mills
14 Mar 1995

Troubleshooting Chart: Refrigeration pressures

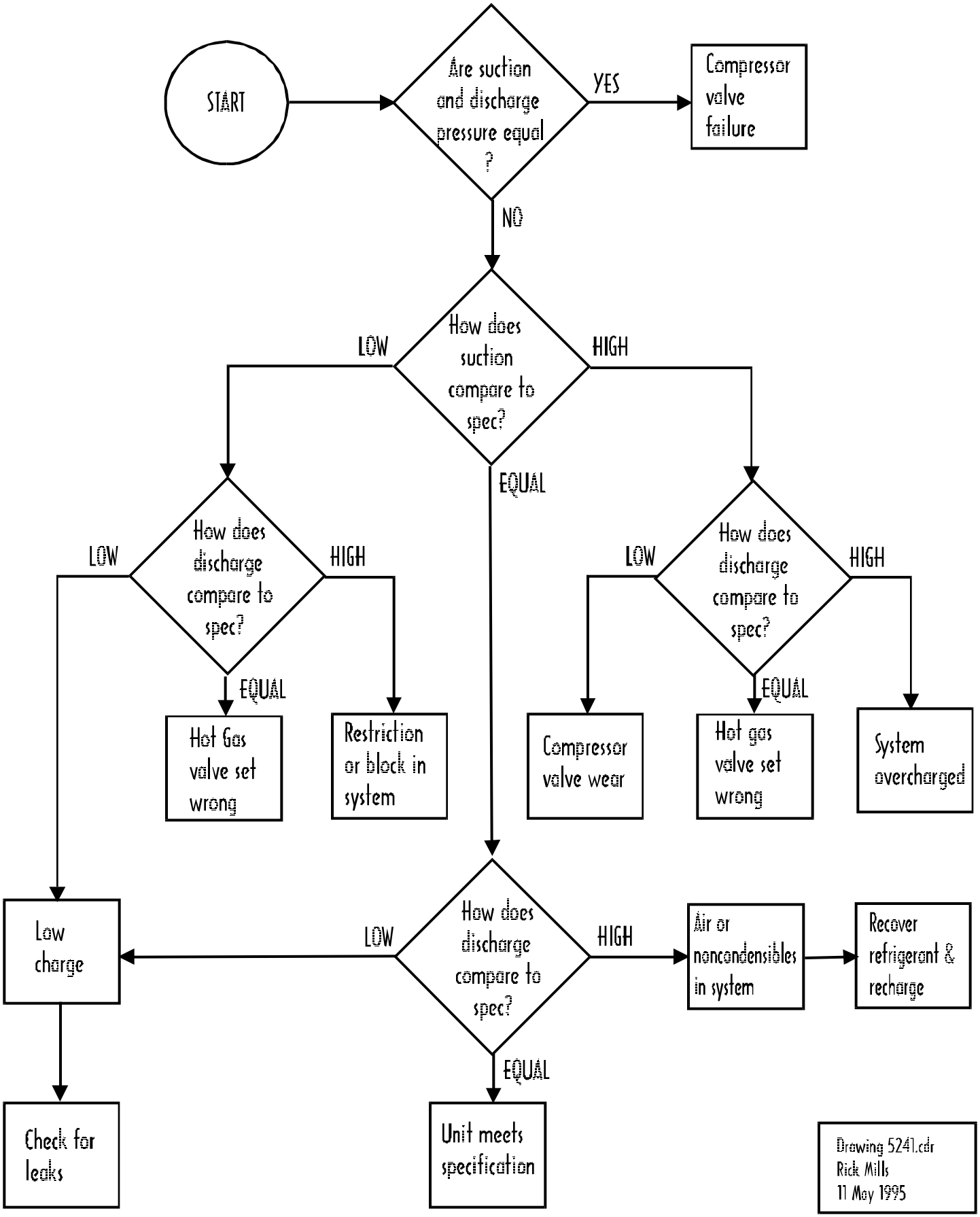

Compressor replacement

1. Remove all access panels.

2. Confirm that the problem is not external to the compressor (electrical) before proceeding. If the compressor does not start/run, check the following:

    A. Is proper voltage present at the compressor terminals?

    B. Are all starting devices (capacitors, potential relays) good?



Disconnect the unit from line voltage

    C. Are the motor windings known to be good or bad? If in doubt, Ohmmeter readings of the windings may be compared to the replacement compressor.

3. Recover the system refrigerant.

4. Disconnect wires, starting devices, etc. from compressor.

5. Remove valve cores from both Shrader valves.

6. Remove the coil from the solenoid valve and move it out of the torch area. Wrap a damp rag around the solenoid valve body.

7. Unsolder and remove compressor and dryer.

    NOTE: If a compressor burnout is suspected, invert old compressor and drain out a small sample of oil. Test the oil for acidity, following the manufacturer's recommendations on the acid test kit. If the oil is acidic, the refrigeration system will need flushing to remove the acidic oil. Replace with new oil.

8. Unpack new compressor. Remove plugs from the ports.



Compressors are typically shipped pressurized with a dry nitrogen charge. Safety glasses are especially necessary when removing plugs. Orient compressor so the plug will exit the port pointing away from you and others.

NOTE: Replacement Copeland compressors already contain an adequate oil charge. It is not necessary to add any oil to the new compressor.

9. Remove the suction service port stem from the old compressor, and insert it into the new compressor.

10. Apply nitrogen purge gas to the stem.

11. Braze in place using BAg 28 (silver solder) compound.

12. Position the new compressor in place.

13. Position the new dryer in place. Ensure the flow direction arrow points toward the solenoid valve.

14. Wrap a damp rag around the dryer.

15. Apply nitrogen purge gas to the suction service port.

16. Braze the suction and discharge lines to the compressor, using BAg 28.

17. Braze the dryer in place, using BAg 28.

18. Insert new valve cores in the Shrader valves.

19. Pressurize system and leak check.

20. Evacuate system.

21. Charge system to specification.

22. Test system.

Fan Motor Replacement



1. Disconnect unit from its electrical power supply.

2. Remove access panels to gain access to the fan motor and electrical box. Remove the electrical box cover.

3. Note the location and orientation of the electrical wiring for installation.

4. Disconnect the electrical wiring from the electrical box.

5. Unbolt the fan cage from the fan shroud.

6. Remove the fan blade.

7. Unbolt the fan motor from the fan cage.

8. Vacuum dust and dirt from the area.

9. Install the new fan motor on to the fan cage.

10. Install the fan blade.

11. Bolt the fan cage to the fan shroud.

12. Install the electrical wiring as noted during removal.

13. Install the electrical box cover.

14. Test the fan motor for operation.

15. Install all access panels.

FILTER/DRYER REPLACEMENT

NOTE: The filter/dryer contains a desiccant which will absorb moisture from the atmosphere. The filter/dryer should be replaced whenever the refrigeration system has been opened and allowed to go to atmospheric pressure. Unsealing and installing the new filter/dryer should be left until the last possible minute to minimize contamination of its desiccant.



Disconnect the unit from line voltage

1. Recover the system refrigerant.
2. Remove all Shrader valve cores.
3. Remove solenoid valve internal components (See “Solenoid valve replacement procedure” for drawing) Wrap a damp rag around the solenoid valve body.
4. Apply purge gas to the system.
5. Desolder and remove old filter/dryer.
6. Place new filter/dryer in position, with direction-of-flow arrow pointing towards the liquid line solenoid valve.
7. Wrap the filter/dryer body in a damp rag.
8. Introduce nitrogen purge gas into the discharge service port.
9. Braze connections using BAg 28. Orient torch flame away from the filter/dryer body. Any bubbling of the paint on the filter/dryer indicates excessive temperature is being approached - stop and allow to cool if this occurs.
10. Remove the damp rags and the nitrogen supply.
11. Insert new schrader valve cores.
12. Assemble the solenoid valve (Do Not over tighten - Use two wrenches).
11. Pressurize and leak check.
12. Evacuate system.
13. Charge system.
14. Test.
15. Install any access panels removed.

Solenoid valve replacement:

Disconnect the unit from line voltage

1. Recover refrigerant.

2. Remove coil.

3. Remove all valve cores from the Shrader valves.

4. Note the direction of flow so that the new valve can be properly positioned during assembly. Disassemble solenoid valve and remove internal components as shown below.

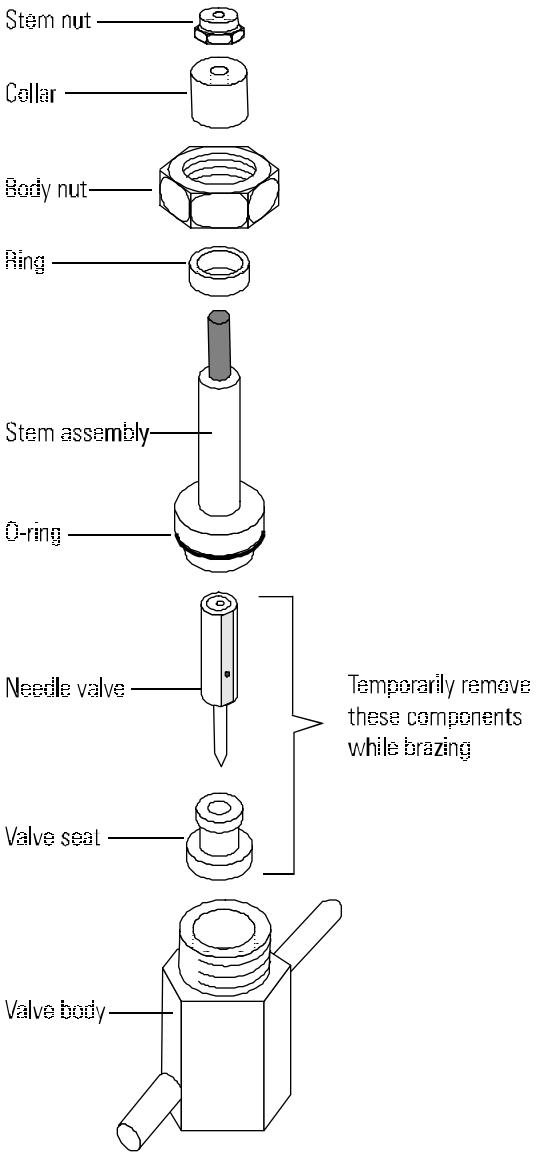

5. Protect all components that could be affected by the soldering flame with damp rags and metal shielding.

6. Apply a nitrogen purge gas to the system.

7. Unsolder the valve and dryer and remove.

8. Place new valve and dryer in position. Check that the flow direction arrows on both devices point towards the capillary tube.

9. Wrap a damp rag around the valve and dryer and protect any other components/wiring with damp rags and metal shields.

10. Apply nitrogen purge gas to the system.

11. Braze in place using BAg 28 compound (silver solder).

12. Remove rags and inspect brazing.

13. Install new valve cores in the Shrader valves.

14. Assemble solenoid valve assembly. (Use two wrenches and do not over tighten.)

15. Pressurize system and leak check. The solenoid valve is closed, so be sure to pressurize both sides.

12. Evacuate the refrigeration system.

13. Install coil.

14. Charge system to specification.

15. Test system.

16. Install any access panels removed.

Tank Coil Assembly (TCA) replacement

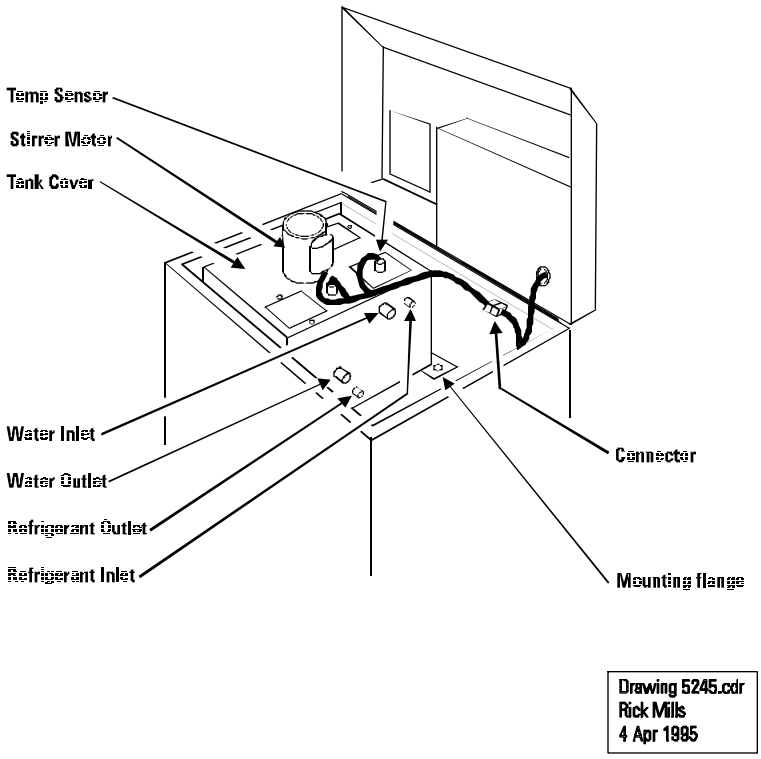

NOTE: The evaporator coil and the water tank are one unit. They cannot be separated. The following procedure assumes that the pump along with its plumbing has been removed.

Disconnect unit from line voltage.

1. Recover refrigerant, if any remains.

2. Drain fluid from system.

3. Remove valve cores from both Shrader valves.

4. Remove screws from Tank Cover and lift it off the tank with all wires, motors, sensors, etc. intact. Invert it and place it to the side as shown. If more slack is required in the wires, unplug the connector shown.

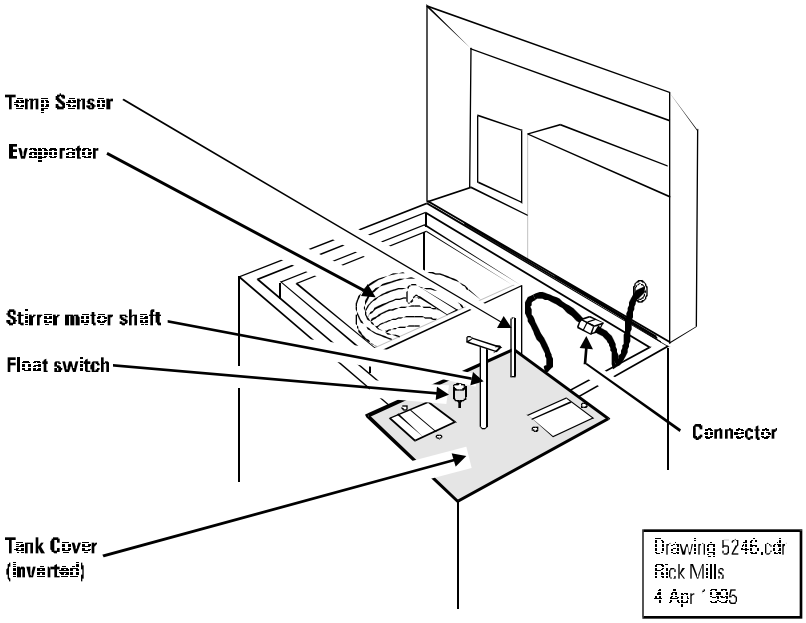

5. Remove the two fluid hoses from the water inlet and outlet stubs.

6. Remove the insulation from the refrigerant inlet and outlet lines.

7. Unsolder the refrigerant inlet and outlet lines.

CAUTION: The refrigerant inlet and outlet lines are stainless steel. They are easily damaged by excessive heat. Never apply the torch flame directly to the stainless. Warm the copper fittings up slowly and evenly until the solder liquefies.

8. Remove the four screws that hold the TCA mounting flange to the mounting rails.

9. Lift the TCA straight up out of the unit.

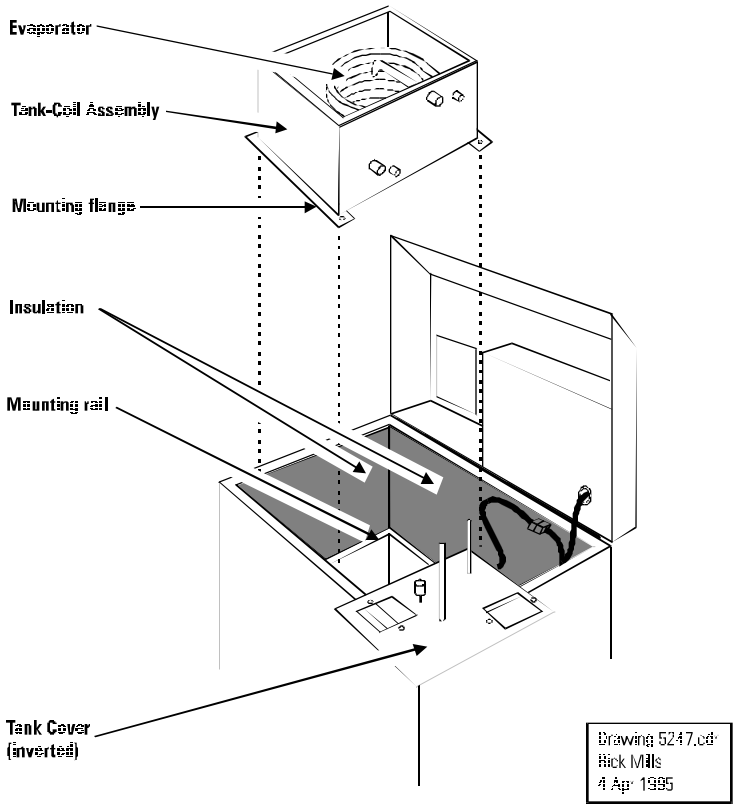

10. Inspect the insulation on the inside of the case walls while the TCA is removed. Replace any that is wet. Install insulation on the new TCA.

11. Transfer the strainer from inside the old TCA to the new TCA, if required.

12. Clean the refrigeration stubs on the new TCA carefully prior to installation. Clean the inside of the mating copper lines prior to installation.

13. Lower the TCA into place and secure the mounting flange to the mounting rails.

CAUTION: The refrigerant inlet and outlet lines are stainless steel. They are easily damaged by excessive heat. Solder the fittings as follows:

A. Ensure all fittings have been carefully cleaned.

B. Apply a paste-type flux.

C. Assemble fittings.

D. Apply nitrogen purge gas to the suction service port.

E. Warm the copper fittings slowly and evenly. Do not rush this procedure. Observe the flux change to a watery clear state.



CAUTION: Never apply the torch flame directly to the stainless.

F. Apply BAg 28 (silver) solder.



CAUTION: The stainless must never be hot enough to turn cherry red. This will cause oxidation and the solder will not wet the oxidized material. If this occurs, stop immediately. Allow fittings to cool. Polish the stainless fittings with emery cloth until all traces of dark oxidation are removed.

14. Disconnect nitrogen purge gas.

15. Install new valve cores in the Shrader valves.

16. Pressurize system and leak check.

17. Evacuate system.

18. Charge system to specification.

19. Test system.

WATER REGULATING VALVE: REPLACEMENT (present on water-cooled units only)

Disconnect unit from its electrical power supply.

1. Recover refrigerant charge.

2. Remove valve cores from both Shrader valves.

3. Apply nitrogen purge gas to the discharge service port.

4. Unbraze the valve's sensor pickup from the compressor discharge line.

5. Braze the new valve's sensor pickup in place using BCuP3 or BCuP5 brazing compound. Silver-based solder is not recommended for this joint.

6. Remove nitrogen supply.

7. Install new valve cores.

8. Begin evacuation of refrigeration system.

9. While system is being pumped down, Turn the adjusting screw on the old valve fully closed (CCW). Count how many turns are required to close it.

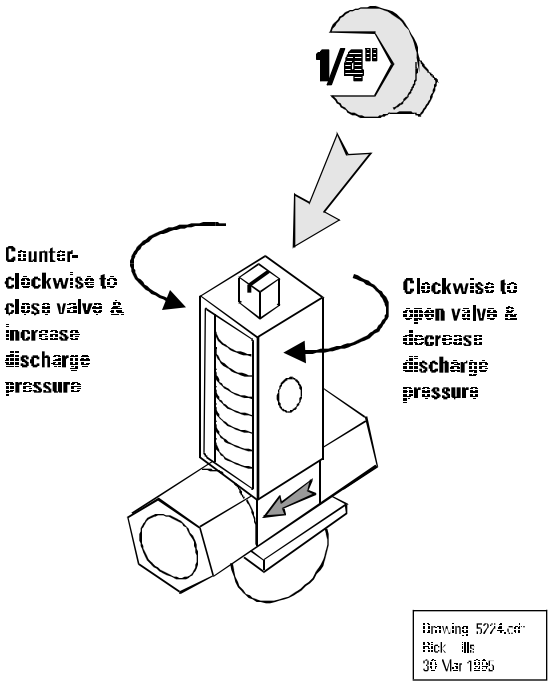

10. Disassemble the two unions holding the original valve in place.

11. Remove original valve.

12. Transfer fittings to new valve.

13. Mount new valve using the two unions.

14. Turn the adjusting screw on the new valve fully closed.

15. Now back it out the number of turns observed in the previous step. This will approximate the correct setting.

16. Pressurize system and leak check.

17. Evacuate system.

18. Recharge refrigeration system.

19. Test.

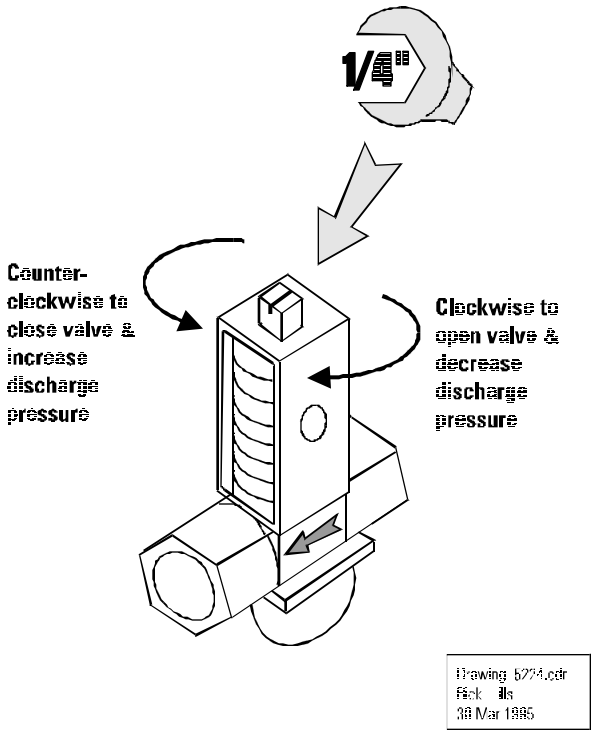

Refrigeration Components General Replacement Procedures

Note: Make note of the in/out orientation of all components before disassembly so that they may be correctly oriented during installation. The Filter/Dryer should always be changed along with any other refrigeration component or when the refrigeration system has been exposed to atmospheric moisture.



1. **Disconnect the unit from line voltage**

2. Remove access panels.

3. Recover system refrigerant.

4. Remove the valve cores.

5. Remove solenoid coil/s.

6. Disassemble solenoid valve/s (this procedure is shown in the "Solenoid valve replacement procedure") and remove the internal components (for purging). Place the nut and stem back on the valve and secure snugly.

7. Protect all components that could be damaged during brazing with damp rags and/or metal shielding.

8. Apply a slow nitrogen gas purge.

9. Unsolder all components being changed and remove.

10. Remove nitrogen purge.

    NOTE: All components should be clean and silver soldering flux applied. The Filter/Dryer should be the last component installed to prevent contamination.

11. Place new components into position. Check that the "IN" / "OUT" sides are in proper orientation in the system as notes before removal. If a new solenoid valve is being installed make sure that it is disassembled (see step 6 above).

12. Ensure that all components are protected from heat with damp rags and / or metal shields.

13. Apply a slow nitrogen gas purge.

14. Braze component/s in place using BAg 28 compound silver solder.

15. Remove all rags and metal shielding.

16. Inspect all brazing joints.

17. Assemble solenoid valve/s internal parts (this procedure is shown in the “Solenoid valve replacement procedure”).

18. Install new valve cores.

19. Pressurize the system and check for leaks. Be sure to pressurize both sides of any solenoid valve and the high and low side of the system.

20. Evacuate the refrigeration system.

21. Charge the refrigeration system to specifications.

22. Test the unit for proper operation.

23. Install all access covers.

Speed check

Speed Check is a term used to describe how fast a unit can cool across 20°C when it is running at maximum capacity. The unit of measure is “degrees per minute”. This will provide a number that is easy to obtain and compare.

1. Find the DROP figure from the table. (For example, the HX100 with a PD-1 pump has a drop of 1.4°C.)

2. Divide the drop in half. (Example: 0.7°C)

3. Add this half to 20°C to find the START point. (Example: 20.7°C)

4. Subtract this half from 20°C to find the STOP point. (Example: 19.3°C). Now the entire drop is centered about 20°C.

5. Connect the unit’s inlet and outlet with as short a loop of hose as practical. Insert a thermometer with 0.1°C resolution in the loop.

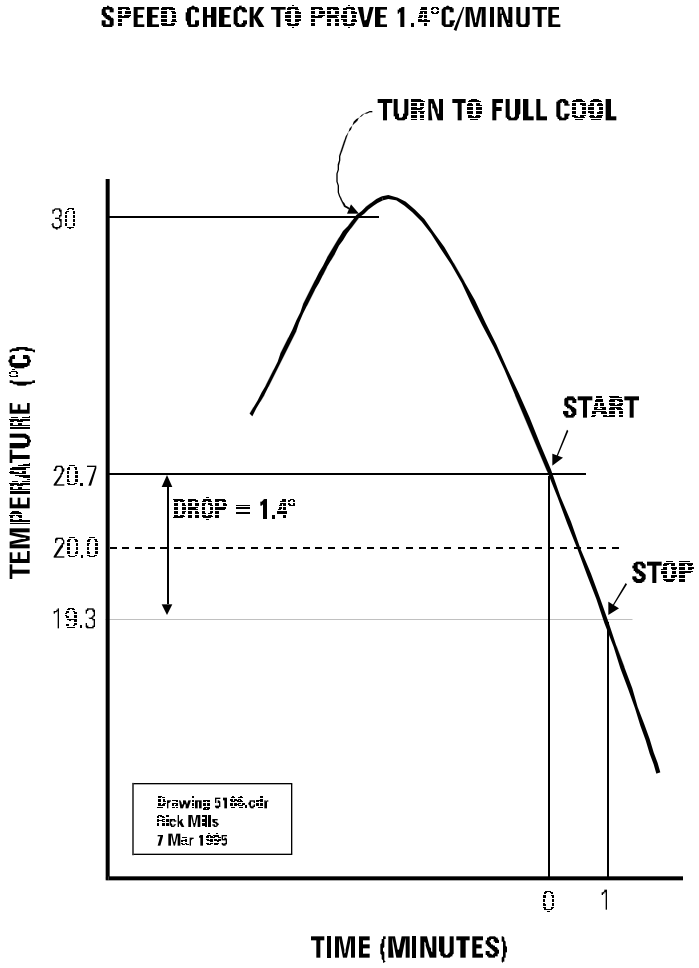

6. Ensure the fluid used is 100% water. Heat the fluid to at least 30°C, then turn unit to full cool.

7. Begin timing as soon as the START temp (20.7°C) is passed.

8. Stop timing when the STOP temp (19.3°C) is passed.

9. Elapsed time must be one minute or less.

Suction Discharge Pressure and Speed Check

Air-Cooled Standard and High Temperature Units (All Pump Types)[1]

Unit	Suction(psi)	Discharge(psi)	Speed Check(°C/Minute)
HX-75	77 - 84	225 - 250	1.5 - 1.7
HX-100	75 - 83	245 - 265	1.3 - 1.6
HX-150	70 - 73	240 - 270	2.0 - 2.5
HX-200	85 - 105	230 - 255	1.6 - 1.9
HX-300	84 - 105	270 - 305	2.4 - 2.7
HX-500	80 - 90	215 - 235	2.0 - 2.4
HX-750	65 - 75	185 - 215	Not Available

Water-Cooled Standard and High Temperature Units (All Pump Types)[2]

Unit	Suction(psi)	Discharge(psi)	
HX-75	72	170	Speed check times not established.
HX-100	86 - 92	180	
HX-150	65	175	
HX-200	85 - 90	180	
HX-300	73 - 78	180	
HX-500	75 - 82	150	
HX-750	50 - 60	180	

1. 27°C unit temperature, water in reservoir, access panel removed.
2. 25°C unit temperature, water in reservoir.

NOTE: For low temperature units please call NESLAB.

Condenser, Air Cooled

The condenser should be cleaned periodically. The grille covering the condenser is removable. The best way to remove dust is to force it out in the opposite direction from which it entered. If compressed air is available, direct the air against the inside of the condenser. If a vacuum cleaner is used, apply the vacuum to the outside of the condenser. Straighten any bent fins using a fin comb.

Condenser, Water cooled

The water cooled condenser generally needs no maintenance. If the cooling water is particularly dirty, deposits may occur and cause flow restrictions. In this event flushing may be required. The procedure used depends on whether a closed facility water cooling system or a tap water system is used. The procedures are described on the following pages.

Flushing using a closed facility system

1. Turn HX off.

2. Close valves on cooling water supply and return lines.

3. Disconnect hoses from cooling water supply and return, and reverse them.

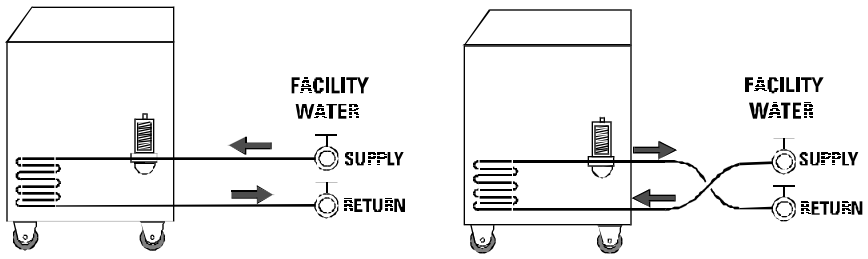

NORMAL CONNECTION FLUSHING CONNECTION

Drawing by Rick
Rick Mills
23 March 1995

Flushing closed facility system (continued)

4. Open valves on cooling water supply and return lines.

5. Run HX normally for 10-15 minutes. Adjust setpoint so HX cycles between heat and cool. The condenser flow is now reversed. This reverse flow will tend to loosen any deposits. Cooling performance may be less, and the water regulating valve may make some vibration noise.

6. Turn HX off.

7. Close valves on cooling water supply and return lines.

8. Restore hoses to original configuration.

9. Open valves on cooling water supply and return lines.

Flushing using a tap water system

1. Turn HX off.

2. Close valve on cooling water supply line.

3. Disconnect hoses from cooling water supply and drain, and reverse them.

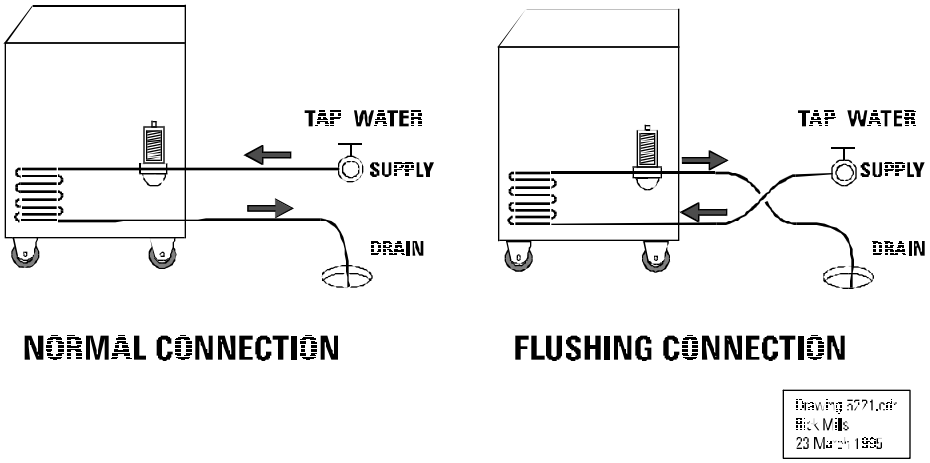

Flushing tap water system (continued)

4. Open valve on cooling water supply line.

5. Run HX normally for 10-15 minutes. The condenser flow is now reversed. This reverse flow will tend to loosen any deposits. Cooling performance may be less, and the water regulating valve may make some vibration noise.

6. Turn HX off.

7. Close valve on cooling water supply.

8. Restore hoses to original configuration.

9. Open valve on cooling water supply line.

Flushing with unit turned off

In either the closed facility or tap water system, it is possible to flush the condenser even if it not possible or convenient to turn the HX on. This method may be used, for example, if the HX is having other service or maintenance performed at the same time; or if electricity is not available.

It is necessary to manually open the regulating valve to allow flow through the condenser. There are two techniques.

A. The valve may be opened by prying up the spring follower disc using two flat-blade screwdrivers, one on each side. The valve will be open as long as the spring is compressed. This is practical for a momentary opening of the valve, as it does not disturb the adjustment.

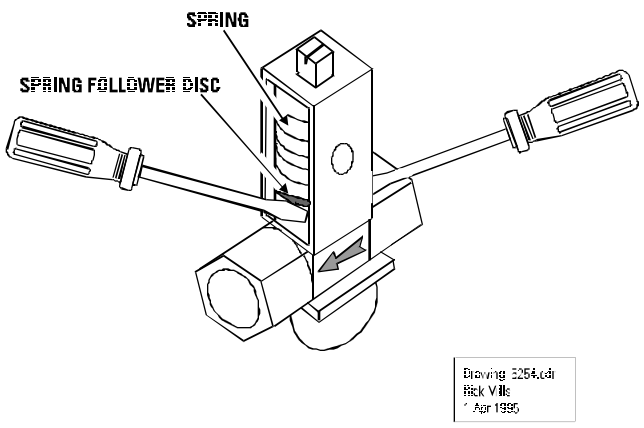

Flushing with unit turned off (continued)

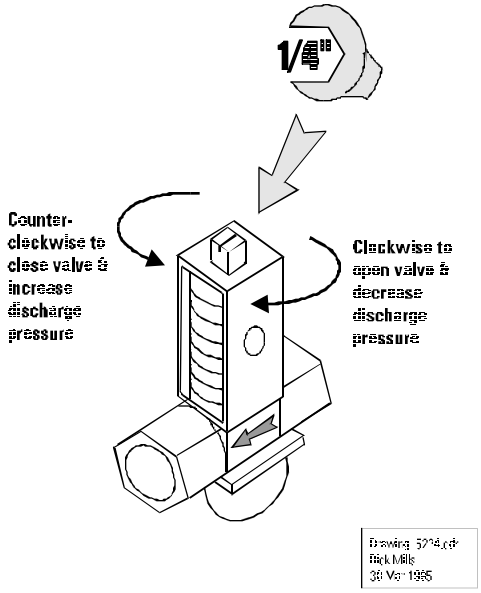

B. The second technique is to fully open the valve by turning the adjusting screw clockwise until it stops. Count how many turns are required so it may be restored later.

Commercial flushing chemicals

Commercial flushing chemicals may be used, provided the chemical is not harmful to copper. Examine and follow the container directions carefully.

HOT GAS VALVE

(also known as Automatic Discharge Relief valve)

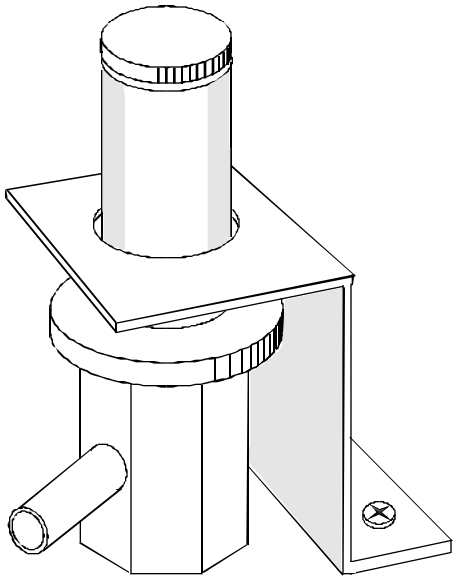

The HX-200 thru 750 uses a base-mount type hot gas valve, mounted near the center of the base of the unit.

OPERATION

This valve is closed during the cool cycle. When the unit switches to heat cycle, the solenoid valve in the liquid line closes, and the resulting increase in discharge pressure opens the hot gas valve. This provides a path for refrigerant gas to enter the evaporator directly without going through a liquid phase, providing a heating effect.

Hot gas valve (continued)

SETTING

Observing the suction pressure (while the unit is running in the heat/idle cycle) will indicate the setting of the hot gas valve. The valve is set correctly when the suction gauge indicates 25 PSIG for any system using R-22 refrigerant.

The setting is adjusted as shown in the illustrations. Turning the adjustment clockwise will increase the pressure setting on either type valve. Contact NESLAB Technical Service for setting specifications on systems using other refrigerants.

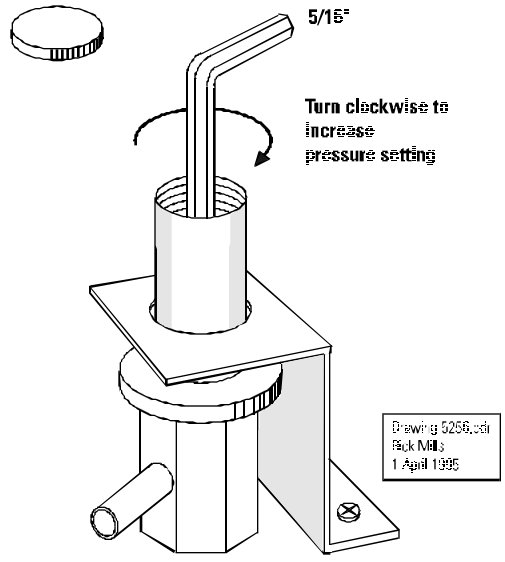

LEAK

The base mount type may develop a leak across the diaphragm. Refrigerant will escape into the adjustment chamber. The refrigerant will be trapped in the adjustment chamber (if the dust cap is in place). Over time, the adjustment chamber pressure will rise from ambient to whatever pressure is present in the refrigeration system. The pressure across the diaphragm will equalize. The diaphragm in the valve will cease to operate correctly, as it expects to have ambient air pressure on one side.

Hot gas valve (continued)

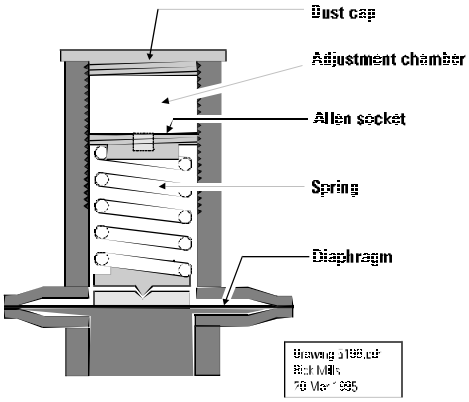

The result will be an open hot gas valve all the time. Refrigerant will flow through both heat and cool loops simultaneously. The hot gas and the liquid entering the evaporator will tend to cancel each other out. The unit will have essentially no cooling capacity at all, and the fluid temperature will tend to remain constant.

A leak can be verified as follows: Turn the unit off. Slowly unscrew the dust cap. If a leak exists, a puff of refrigerant will be observed to escape from the adjustment chamber when the cap is removed. Once the pressure is released, the valve will be able to operate normally. Start the unit and see if performance is restored. The unit can now be operated temporarily with the dust cover removed, but the leak still exists and needs repair.

Any further leak detection inside the adjustment chamber should only be done with an electronic sniffer type detector. Do not use liquid detection fluid.

RESONATION

It has been observed that certain base-mounted hot gas valves have a mechanical resonance point. If the valve is adjusted to that point, the valve will resonate with an audible whine or moaning sound whenever the unit is in the heat cycle.

If this is observed, it is recommended the setting be tweaked away from the resonance point. With the unit running in the heat cycle, turn the adjustment screw in either direction until the noise stops. Up to one complete turn in either direction is acceptable. This will not significantly change the performance of the unit.

SCHRADER VALVES

Refrigerant leaks may occur at the valve core of Schrader valves. These leaks may not be apparent due to the cover and/or any thread sealant used. NESLAB recommends leak checking all Schrader valves, especially any that have been accessed during service.

If the system is emptied of refrigerant, NESLAB recommends replacing the valve cores with new ones as a preventive measure.

If a leak is suspected but cannot be confirmed with an electronic leak detector, NESLAB recommends using a party balloon to trap any escaping refrigerant. This will provide a visual confirmation of a leak.

BALLOON TEST

1. Remove valve cover, if installed.

2. Stretch a balloon over the Schrader valve threads.

3. A leak will inflate the balloon. Leave the balloon in place overnight if convenient.

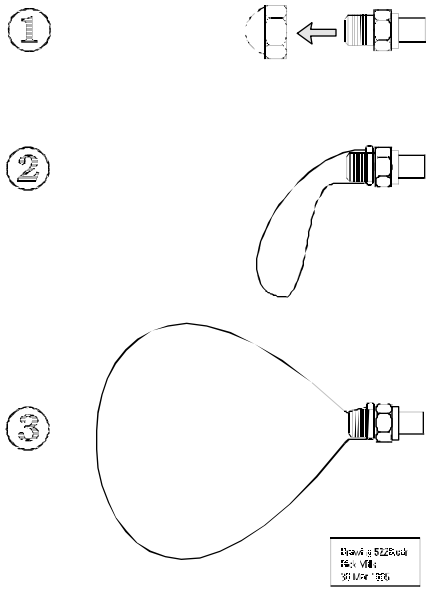

SCHRADER VALVES (continued)

4. Replace valve core if a leak is indicated, and retest.

5. Replace valve cover.

   A. If it is the gasket type, replace with flare seal cap NESLAB part number 009121.

   B. Inspect flare surfaces on the valve and cap. They should be smooth and free of burrs.

   C. Apply one drop of the appropriate refrigeration oil to the flared surface of the cap to prevent galling. Do Not Over Oil - it will displace the sealant.

   D. Apply only one drop of sealant (Perma-Lok® LM012 recommended - NESLAB partnumber 013002) to the first thread of the valve and work it around at least half way, but no more than one complete turn.

   E. Hand tighten cap until is seats. Apply two wrenches - one on the valve body, one on the cap: and tighten ¼ turn only. **DO NOT OVERTIGHTEN!**

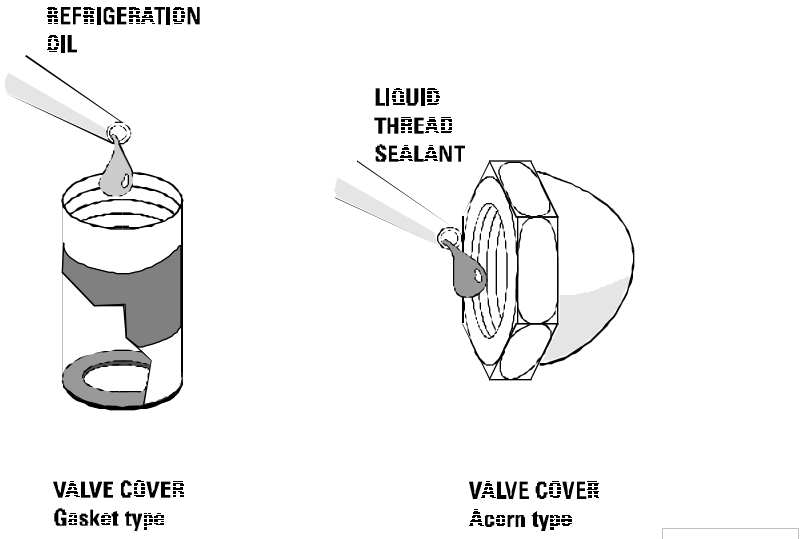

SOLENOID COIL

The solenoid coil should be energized in the cool cycle (opening the solenoid valve), and off in the heat cycle.

The coil can be tested by removing the coil from the valve and sliding the coil over a screwdriver shaft. Turn unit on and adjust setpoint up and down. You should feel the coil attract the screwdriver in the cool cycle, and release in the heat cycle.

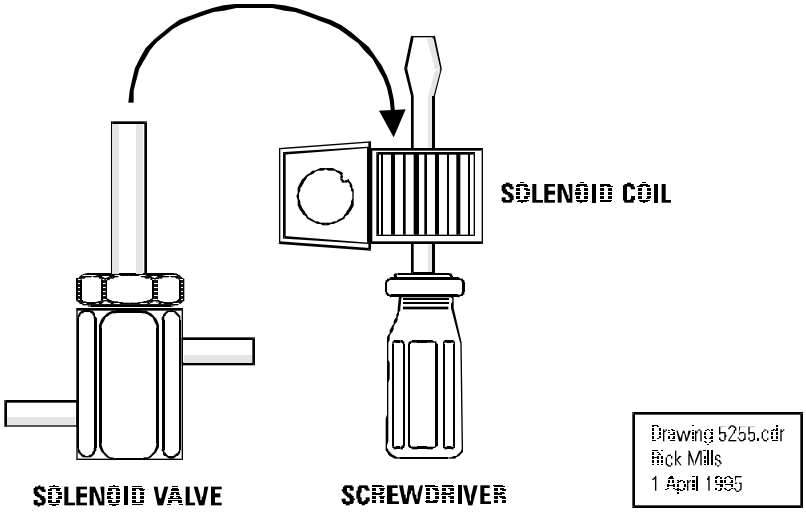

If the coil never turns on, either the coil is open or the control voltage is missing. The coil can be tested for continuity using an Ohmmeter. Turn the unit off. Unplug the coil from the wiring harness and measure the coil resistance. It should be 750 - 850 Ohms.

Replacements are available as a coil only, or a coil assembly. The assembly includes the electrical connector. Refer to the parts list for part numbers.

If a coil is obtained locally, be sure it is type OMKC-1 and rated for 208VAC. **Do not substitute a DC coil.**

Solenoid valve rebuild

NOTE: Many times the solenoid valve can be rebuilt in place, completely avoiding any brazing and greatly reducing the time needed for repair.

Rebuild procedure:

See next page for illustration.

1. Recover refrigerant.
2. Remove coil.
3. Remove large nut from valve body.
4. Remove internal valve components.
5. Inspect interior of valve body for cleanliness and lack of burrs or wear.
6. Disassemble new valve, and transfer components to the existing valve body.
7. Install large nut onto valve body.
8. Pressurize system and leak check. As the valve is normally closed, be sure that both sides of the valve are pressurized.
9. Begin evacuation of system.
10. Install coil.
11. Charge system to specification.
12. Test system.

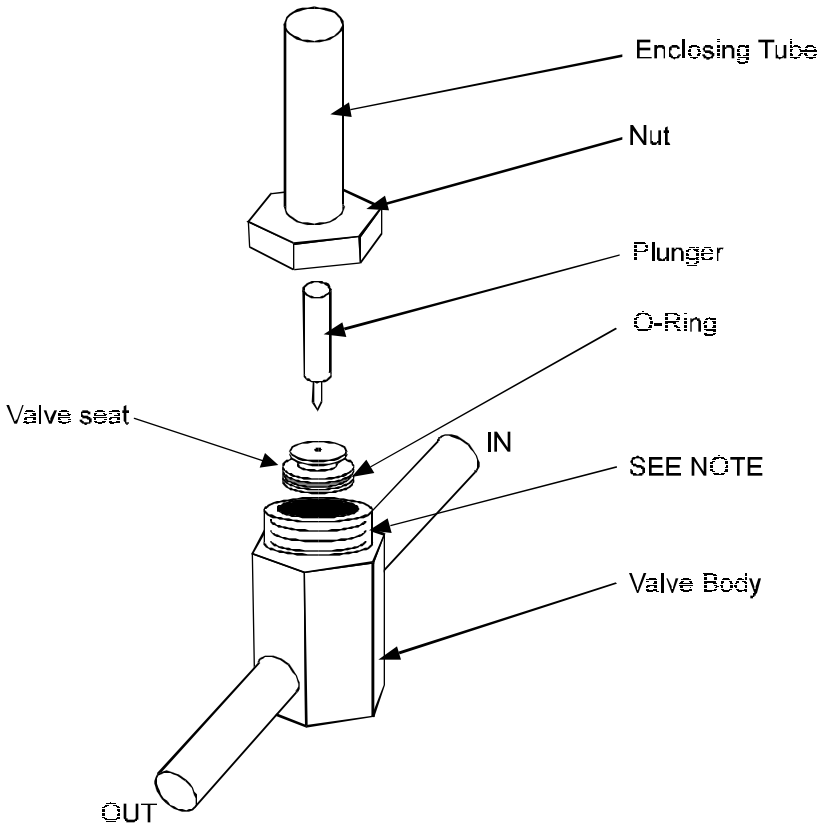

5569

Note: Apply hydraulic sealant (013002) to first two threads on valve body before tightening. Do not get sealant inside valve body!

Tank coil assembly failure

A hole developing in the evaporator of the Tank Coil Assembly can cause serious problems if not detected quickly. Once a hole occurs, refrigerant will escape into the circulating fluid. Once the refrigerant is exhausted, circulating fluid will be drawn in and contaminate the refrigeration system.

A hole in the evaporator may be recognized by a stream of (refrigerant) bubbles coming to the surface of the circulating fluid in the tank. If this is observed, it is vital to immediately shut the system down and drain the circulating fluid until it is below the level of the leak. This will prevent fluid from being drawn into the refrigeration system.

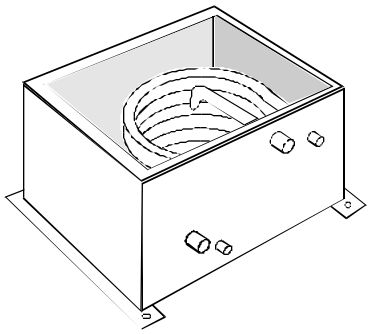

Tank Coil Assembly (TCA) repair

A hole occurring in the evaporator may be repaired, provided the hole is accessible and the capacity exists to weld stainless steel. A bead of weldment can be placed over the hole. The most practical method may be to remove the TCA as outlined in the “Tank Coil Assembly (TCA) replacement” procedure, and take the TCA to a local welding shop. Advise the welder the coil is type 304 stainless steel.

If the hole is inaccessible, or no welding capability exists, the entire TCA should be replaced.

Water regulating valve setting

The correct setting of the valve is easily determined.

1. Supply cooling water to HX.

2. Direct the outlet hose into a bucket or drain.

3. Turn the HX on.

4. Turn the setpoint to minimum. The HX should enter the cool cycle. Observe full flow from the outlet hose. Allow it to run until all air is displaced.

5. Turn setpoint to maximum. The HX should enter the heat cycle.

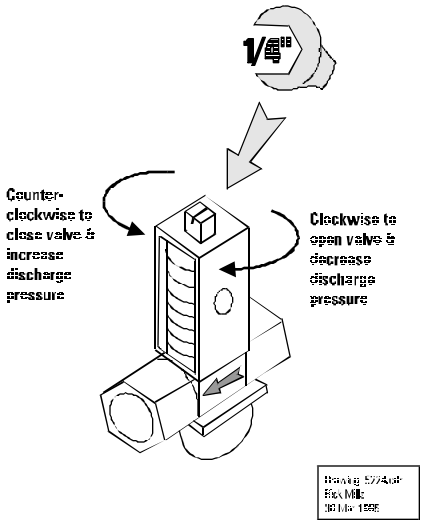

6. Adjust the valve stem closed (CCW) until the flow stops.

7. Slowly open the valve stem (CW) until a small but constant trickle is exiting the outlet hose. This is the point where the valve is just beginning to crack open. This is the correct setting.

8. Turn setpoint to minimum. The HX should enter the cool cycle. Full flow should again be observed from the outlet hose.

Refrigeration Specifications

Charging Data R-22 Standard temperature units				
	HX-200	HX-300	HX-500	HX-750
Air Cooled	9lbs ±0.5 lbs	9lbs ±0.5 lbs	13.5lbs ±0.5 lbs	20lbs ±0.5 lbs
Water Cooled	5lbs ±0.5 lbs	7lbs ±0.5 lbs	10lbs ±0.5 lbs	18lbs ±0.5 lbs
High pressure cutout settings				
	HX-200	HX-300	HX-500	HX-750
Cut Out	300	300	300	300
Cut In	200	200	200	200
Low pressure cutout settings Units with cutout/cutin switch				
	HX-200	HX-300	HX-500	HX-750
Cut Out	3-5 PSIG	3-5 PSIG	3-5 PSIG	3-5 PSIG
Cut In	35-37 PSIG	35-37 PSIG	35-37 PSIG	35-37 PSIG
Low pressure cutout settings Units with cutin/differential switch				
	HX-200	HX-300	HX-500	HX-750
Differential	35 PSIG	35 PSIG	35 PSIG	35 PSIG
Cut In	37-40 PSIG	37-40 PSIG	37-40 PSIG	37-40 PSIG
Standard and High Temperature units suction and discharge pressures* +25°C unit temperature water in reservoir				
	HX-200	HX-300	HX-500	HX-750
Suction	85-90PSIG	73-78 PSIG	75-82 PSIG	50-60 PSIG
Discharge	~180 PSIG	~180 PSIG	~180 PSIG	~180 PSIG
* Tap water temperature above 15°C may cause discharge to be slightly higher.				

R22 PRESSURE - TEMPERATURE CHART

PSIG	TEMP. °F
5*	-48
4*	-47
3*	-45
2*	-44
1*	-43
0	-41
1	-39
2	-37
3	-34
4	-32
5	-30
6	-28
7	-26
8	-24
9	-22
10	-20
11	-19
12	-17
13	-15
14	-14
15	-12
16	-11
17	-9
18	-8
19	-7
20	-5
21	-4
22	-3
23	-1
24	0
25	1
26	2
27	4

PSIG	TEMP. °F
28	5
29	6
30	7
31	8
32	9
33	10
34	11
35	12
36	13
37	14
38	15
39	16
40	17
42	19
44	21
46	23
48	24
50	26
52	28
54	29
56	31
58	32
60	34
62	35
64	37
66	38
68	40
70	41
72	42
74	44
76	45
78	46
80	48

PSIG	TEMP. °F
85	51
90	54
95	56
100	59
105	62
110	64
115	67
120	69
125	72
130	74
135	76
140	78
145	81
150	83
155	85
160	87
165	89
170	91
175	92
180	94
185	96
190	98
195	100
200	101
205	103
210	105
220	108
230	111
240	114
250	117
260	120
275	124
290	128

* Inches mercury below one atmosphere

Drawing 83.wks
Rick Mills
5 April
1995

HEAT LOAD CALCULATION

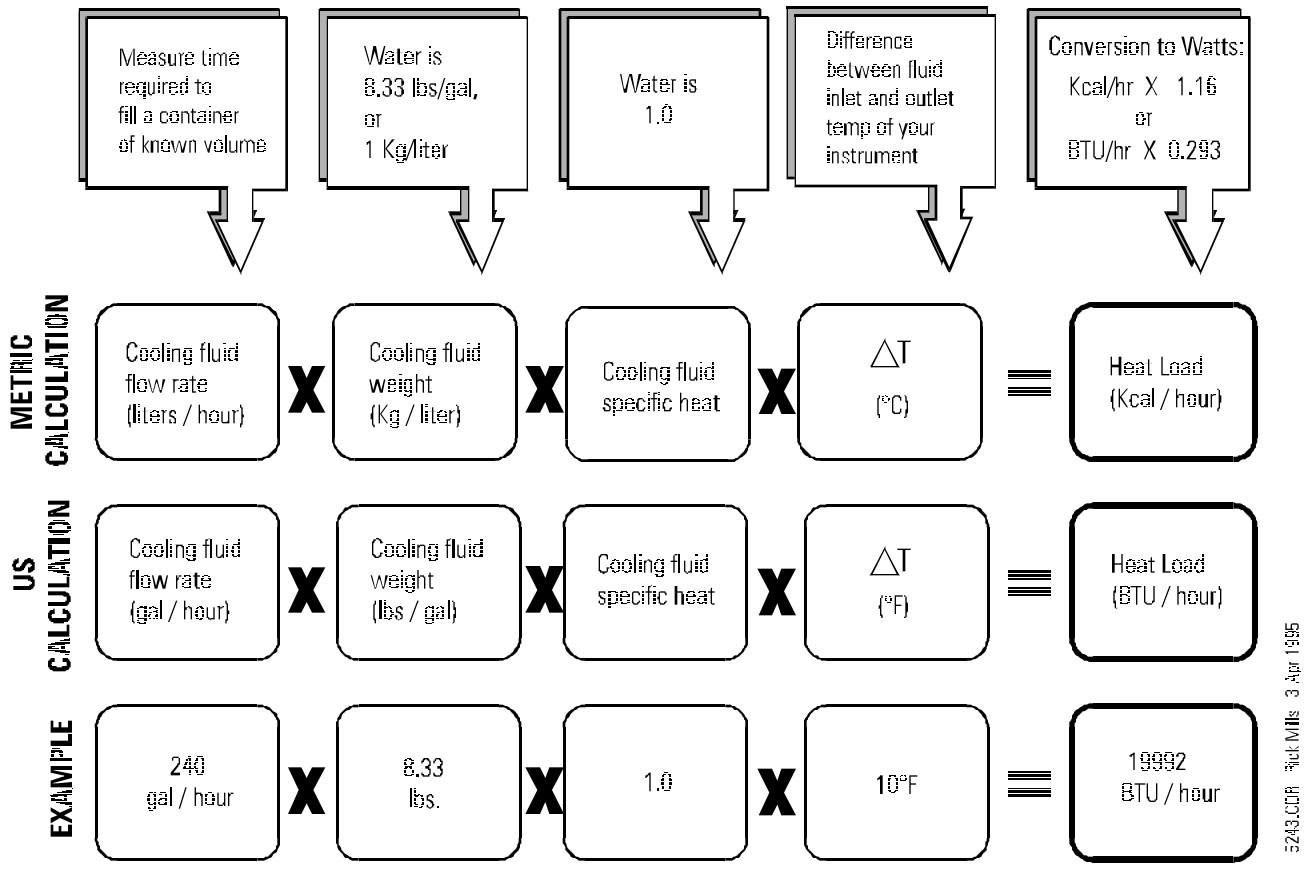

CONDENSER REQUIREMENTS: AIR COOLED UNITS

The unit should be located in a laboratory or clean industrial environment where ambient temperatures are inside the range of +55°F to +95°F (+13°C to +35°C). The unit will retain its full rated capacity in ambient temperatures to approximately +75°F (+24°C). Above +75°F, derate the cooling capacity 1% for every 1°F above +75°F, to a maximum ambient temperature of +95°F. The Celsius deration is 1% for every 0.5 °C above 24 °C, to a maximum ambient temperature of +35°C.

The unit must be positioned so the air intake and discharge are not impeded. Air is drawn in through the left side of the unit and discharged through the right and rear. A minimum clearance of 2 feet (0.6 meter) on these three sides is necessary for adequate ventilation. Inadequate ventilation will cause a reduction in cooling capacity and, in extreme cases, compressor failure.

Excessively dusty areas should be avoided and a periodic cleaning schedule should be instituted.

Refer to the table to determine the approximate amount of air intake required for the unit to retain its full rated capacity.

HX200: 2000 cfm (56640 lpm)

HX300: 1900 cfm (53800 lpm)

HX500: 5000 cfm (141750 lpm)

HX750: 5600 cfm (158800 lpm)

CONDENSER REQUIREMENTS: WATER COOLED UNITS

The facility cooling water supply must meet or exceed the requirements shown below for the unit to operate at its full rated capacity.

As the temperature of the cooling water supply increases, the required flow and pressure of the cooling water supply increases.

Example: On the HX-300, if the temperature of the cooling water supply is 65°F (18°C), the flow rate must be at least 4.0 gpm (15.1 lpm), with a pressure differential of at least 8 psi (55 kPa). However, if the temperature of the cooling water supply rises to 85°F (29°C), the flow rate must be at least 11.0 gpm (42 lpm), with a pressure differential of at least 25 psi (172 kPa).

A water regulating valve, located in TAP WATER line, regulates the flow rate of the cooling water supply as it enters the unit. The valve regulates the flow rate based on the heat load. Flow through the unit stops automatically when the unit is shut off.

HX 200

	55°F (13°C)	65°F (18°C)	75°F (24°C)	85°F (29°C)
Required flow - gpm	1.8	2.5	3.5	6.0
Required flow - lpm	6.8	9.5	13.2	22.7
Required pressure drop - PSI	5.0	6.0	7.0	18.0
Required pressure drop - BAR	0.34	0.41	0.48	1.24
Required pressure drop - kPa	34.48	41.37	48.26	124.11

HX 300

	55°F (13°C)	65°F (18°C)	75°F (24°C)	85°F (29°C)
Required flow - gpm	2.5	4.0	6.5	11.0
Required flow - lpm	9.5	15.1	24.6	41.6
Required pressure drop - PSI	6.0	8.0	13.5	25.0
Required pressure drop - BAR	0.41	0.55	0.93	1.72
Required pressure drop - kPa	41.37	55.16	93.08	172.37

HX 500

	55°F (13°C)	65°F (18°C)	75°F (24°C)	85°F (29°C)
Required flow - gpm	3.5	5.0	8.0	16.0
Required flow - lpm	13.2	18.9	30.3	60.6
Required pressure drop - PSI	13.0	17.0	23.0	57.0
Required pressure drop - BAR	0.89	1.17	1.58	3.93
Required pressure drop - kPa	89.63	117.21	158.58	393.00

HX 750

	55°F (13°C)	65°F (18°C)	75°F (24°C)	85°F (29°C)
Required flow - gpm	6.0	8.0	12.5	16.6
Required flow - lpm	22.7	30.3	47.3	62.8
Required pressure drop - PSI	14.0	20.0	28.5	40.0
Required pressure drop - BAR	0.96	1.38	1.96	2.76
Required pressure drop - kPa	96.53	137.90	196.5	275.79

15 pin Accessory Connector (Optional)

Units with digital controllers may be modified with a 15 pin accessory connector. To enable the connector slide the LOCAL/REMOTE switch on the temperature controller to the REMOTE position. The pin out information is listed below.

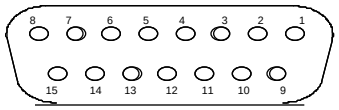

15 pin D-subminiature female receptacle

Pin #	Function
1	Chassis ground.
2	No connection.
3	Span +. Indicates the maximum setpoint value the unit can be set to operate. The temperature scale is 10mV/°C, referenced to analog ground, pin 6(example: +350mV = +35.0°C).
4	Span -. Indicates the minimum setpoint value the unit can be set to operate. The temperature scale is 10mV/°C, referenced to analog ground, pin 6 (example: +50mV = +5.0°C).
5	No connection.
6	Analog ground. The analog ground is physically separated from the power ground throughout the unit. To prevent offsets that result from ground currents, the analog and power grounds are only connected at the unit's power supply. Analog ground should only be used as a reference pin .
7	Sensor temperature (current limited through 2.7K OHM resistor). The fluid temperature, as measured by the controller's sensor located in the reservoir, can be read at this pin. The temperature scale is 10mV/°C, referenced to analog ground, pin 6 (example: +150mV = +15.0°C).
8	Setpoint out. The present temperature setpoint can be read at this pin. The temperature scale is 10mV/°C, referenced to analog ground, pin 6 (example: +150mV = +15.0°C).
9	Power Ground.
10	Heater output. Will source 3V at 6mA.
11	No connection.
12	Digital display (input only). An external voltage can be displayed on the operator panel digital display by applying the voltage to this pin. The display has a low input resistance and a full scale rating of ±1.99VDC. Input is referenced to analog ground, pin 6. The maximum voltage applied to the display should be limited to 2VDC.
13	- 5V. Power supply of -5VDC (15mA maximum).
14	+5V. Power supply of +5VDC (15mA maximum).
15	Setpoint in. The temperature setpoint can be controlled by applying a known voltage to this pin. The temperature scale is 10mV/°C, referenced to analog ground, pin 6 (example: +230mV = +23.0°C).

Air cooled Condensing unit / Water cooled compressor NESLAB Part Numbers				
	208/230 60	220/240 50	440/480 60	380/420 50
200WC	007191		007473	007473
200AC	007595		007596	007596
300WC	007198	007198	007472	007472
300AC	007597	007597	007598	007598
500WC	007214	007214	007215	007215
500AC	007114	007114	007123	007123
750WC	007620	007620	007842	007842
750AC	007127	007127	007125	007125

Water cooled units: Compressor fan NESLAB part number				
	208/230 60	220/240 50	440/480 60	380/420 50
200WC	007402		007402	007402
300WC	007402	007402	007402	007402
500WC	007410	007411	007410	007411
750WC	007410	007411	007410	007411

HX-200 & HX-300 REFRIGERATION PARTS

PART	HX-200 AIR COOLED	HX-200 WATER COOLED	HX300 AIR COOLED	HX-300 WATER COOLED
ADR valve	See Hot Gas Valve	See Hot Gas Valve	See hot gas valve	See Hot Gas Valve
Compressor	Part of C/U	007191	Part of C/U	007198
Condenser	Part of C/U	007190	Part of C/U	009479
Condensing Unit (CU)	See CU part number list	See CU part number list	See CU part number list	See CU part number list
Evaporator	Tank/Coil Assembly	See Tank/Coil Assembly	See Tank/Coil Assembly	See Tank/Coil Assembly
Fan blade	Part of C/U	007663	Part of C/U	007663
Fan motor	Part of C/U	007402	Part of C/U	007402
Filter/Dryer	009320	009320	009320	009320
Hot Gas Valve	009138	009138	009138	009138
Solenoid coil (assembly) liquid line	051694	051694	059957	051694
Solenoid coil (only) liquid line	009476	009476	009476	009476
Solenoid Valve Liquid Line	009475	009475	009475	009475
Suction Filter	009324	009324	009324	009324
Tank/Coil Assembly	052953	052953	053620	053620
TXV	009602	009602	009611	009611
Sight glass	009604	009604	009604	009604
Accumulator	Part of C/U	009304	Part of C/U	009304
Casters (locking)	013058	013058	013058	013058
Casters (Non-locking)	013057	013057	013057	013057
Horsepower	2HP	2HP	3HP	3HP
Refrigerant	R-22	R-22	R22	R-22

HX-500 & HX-750 REFRIGERATION PARTS

PART	HX-500 AIR COOLED	HX-500 WATER COOLED	HX-750 AIR COOLED	HX-750 WATER COOLED
ADR valve	See Hot Gas Valve	See Hot Gas Valve	See Hot Gas Valve	See Hot Gas Valve
Compressor	Part of C/U	007215	Part of C/U	007842
Condenser	Part of C/U	007175	Part of C/U	
Condensing Unit (CU)	See CU part number list	See CU part number list	See CU part number list	See CU part number list
Evaporator	See Tank/Coil Assembly	See Tank/Coil Assembly	See Tank/Coil Assembly	See Tank/Coil Assembly
Fan blade	Part of C/U	007431	Part of C/U	007431
Fan motor	Part of C/U	007411	Part of C/U	007410
Filter/Dryer	009627	009627	009627	009627
Hot Gas Valve	009164	009164	009164	009164
Solenoid coil (assembly) liquid line	051737	051737	051694	051694
Solenoid coil (only) liquid line	009474	009474	009476	009476
Solenoid Valve Liquid Line	009780	009780	009780	009780
Suction Filter	009324	009324	009324	009327
Tank/Coil Assembly	052957	052957	052959	052959
TXV	009623	009623	009691	009691
Sight glass	009604	009604	009604	009604
Accumulator	Part of C/U	007338	Part of C/U	009314
Casters (locking)	000108	000108	000108	000108
Casters (Non-locking)	000107	000107	000107	000107
Horsepower	5HP	5 Hp	7.5HP	7.5HP
Refrigerant	R-22	R-22	R-22	R-22

HX-200 & HX-300 MISCELLANEOUS PARTS

PART	HX-200	HX-200	HX300	HX-300
	AIR COOLED	WATER COOLED	AIR COOLED	WATER COOLED
3 way ball valve	003022	003022	003022	003022
Motor stir 10"	030107.6	030107.6	030107.6	030107.6
CBA	057028.1	057028.1	057028.1	057028.1
Rocker Switch 15A	006416	006416	006416	006416
Xformer 115/230 12V	010298	010298	010298	010298
Knob	010299	010299	010299	010299
Temperature Sensor	051090	051090	051090	051090
Fuse 8A	006031	006031		006031
Lamp Neon Red	010319	010319	010319	010319
3-Ph Rot I lock	010753	010753	010753	010753
Fuse 1.5 A	010983	010983	010983	010983
Float Switch Assy	059214	059214	059214	059214
Drain Kit	090350	090350	090350	090350
Drain Plug	009393	009393	009393	009393
Float Switch only	000440	000440	000440	000440
Fuse 12A			006034	

See the following pages for 50 cycle peculiarities

HX-500 & HX-750 MISCELLANEOUS PARTS

PART	HX-500 AIR COOLED	HX-500 WATER COOLED	HX-750 AIR COOLED	HX-750 WATER COOLED
3 way ball valve	003022	003022	003022	003022
Motor stir 10"	030107.6	030107.6	030107.6	006552.4
CBA	057028.1	057029.1	057028.1	057373.1
Rocker Switch 15A	006416		006416	006416
Xformer 115/230 12V	010298	010298	010298	010298
Knob	010299		010299	010299
Temperature Sensor	051090	051090	051090	051090
Fuse 8A	006031			
Lamp Neon Red	010319	010319	010319	010319
3-Ph Rot I lock	010753	010754	010754	010754
Fuse 1.5 A	010983			
Float Switch Assy	059214	059214	059214	059214
Drain Kit	090350	090350		
Drain Plug	009393	009393		
Float Switch only	000440	000440	000440	000440
Fuse 12A				
Fuse 3.5A		006032		
Fuse Timed		006412		
Fuse 1.5A		006605		
Fuse .5A		010690		
Fuse 8A			006112	006112
Fuse .5A			006087	006087
Fuse 7.0 A			006009	
Fuse 5.0 A			010955	
Fuse 15.0A				001356
Fuse 30.0 A				001597
Fuse 2.5 A				010883

See the following pages for 50 cycle peculiarities

HX-200 & HX-300 MISCELLANEOUS PARTS (50 Cycle)

PART	HX-200	HX-200	HX300	HX-300
	AIR COOLED	WATER COOLED	AIR COOLED	WATER COOLED
50 Hz				
CBA	059975		059975	
Motor Stir	006552.4		006552.4	
Xformer	014823		014823	
Temperature Sensor	086448		086448	
Fuse 3.5 A			006032	
Fuse 0.5 A			006087	
Fuse 3.0 A	006749		006749	
Fuse 5.0 A			010955	
3-PH Rot I Lock			010754	
Fuse 15.0 A	006362			

HX-500 & HX-750 MISCELLANEOUS PARTS (50 Cycle)

PART	HX-500 AIR COOLED	HX-500 WATER COOLED	HX-750 AIR COOLED	HX-750 WATER COOLED
50 Hz				
CBA	057028.1	057029.1	059832	058149
Motor Stir	006552.4	006552.4	006552.4	030107.6
Xformer	010298	010298	010298	010626
Temperature Sensor	051090	051090	086214	010684
Fuse 3.5 A		006032		006032
Fuse 0.5 A	006087		006087	006087
Fuse 3.0 A	006749			
Fuse 5.0 A		010955	010955	010955
3-PH Rot I Lock	010754	010754	010754	010754
Fuse 15.0 A				
Xformer 190/440		010626	010626	010626
Time delay fuse		006417		
Fuse 1.5 A		006605		
Fuse 0.5 A		010690		
Fuse 20.0 A		006392		
Fuse 12.0 A		006428		
Fuse 7.0 A		006009	006009	006009
Fuse 8.0 A	006112		006112	
Fuse 15.0 A	006362			
Fuse 8.0 A	006038			
Fuse 15.0 A			006735	
Fuse 20.0 A			006790	

HX-200 AC rear view

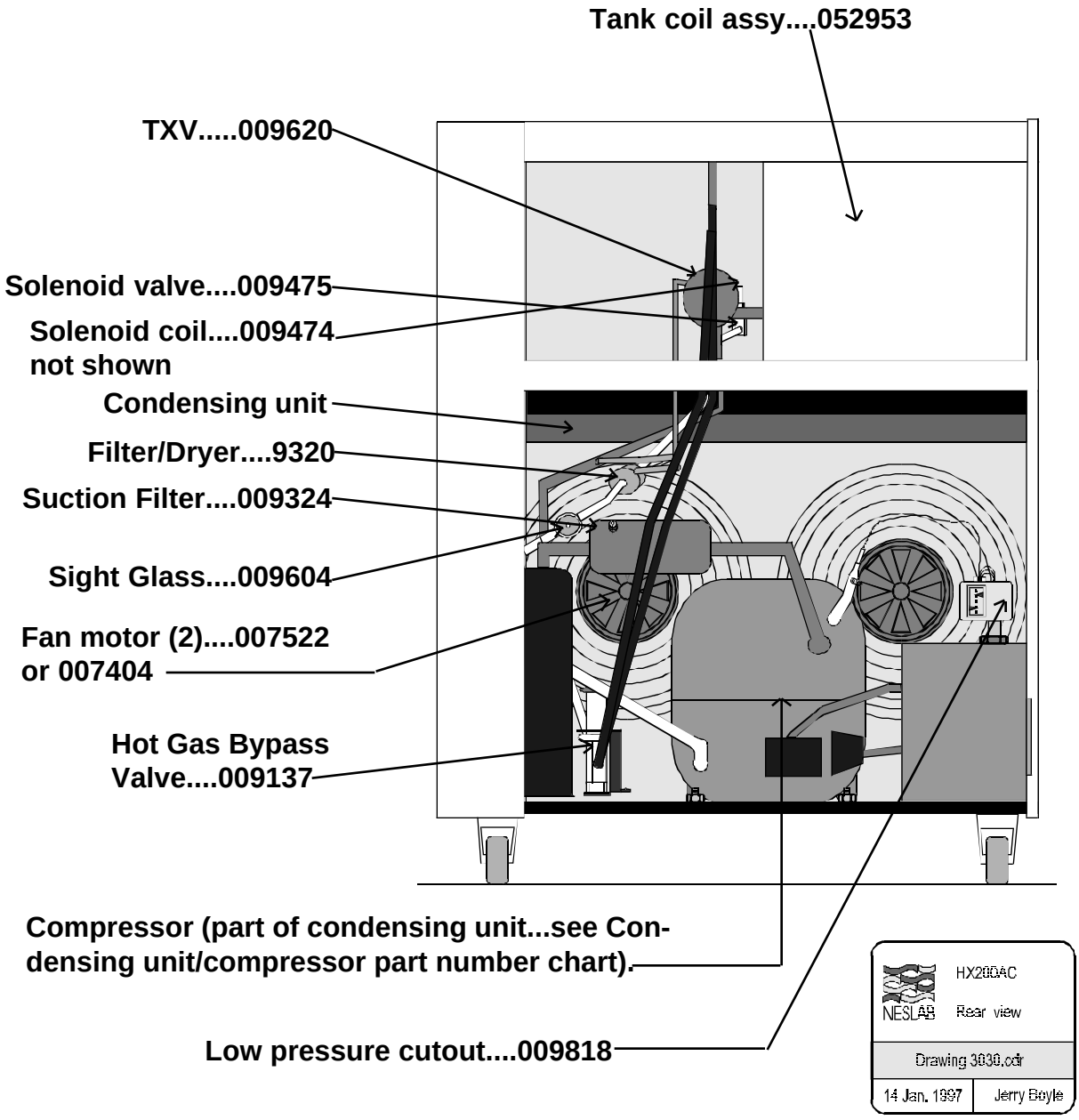

HX-200 AC right view

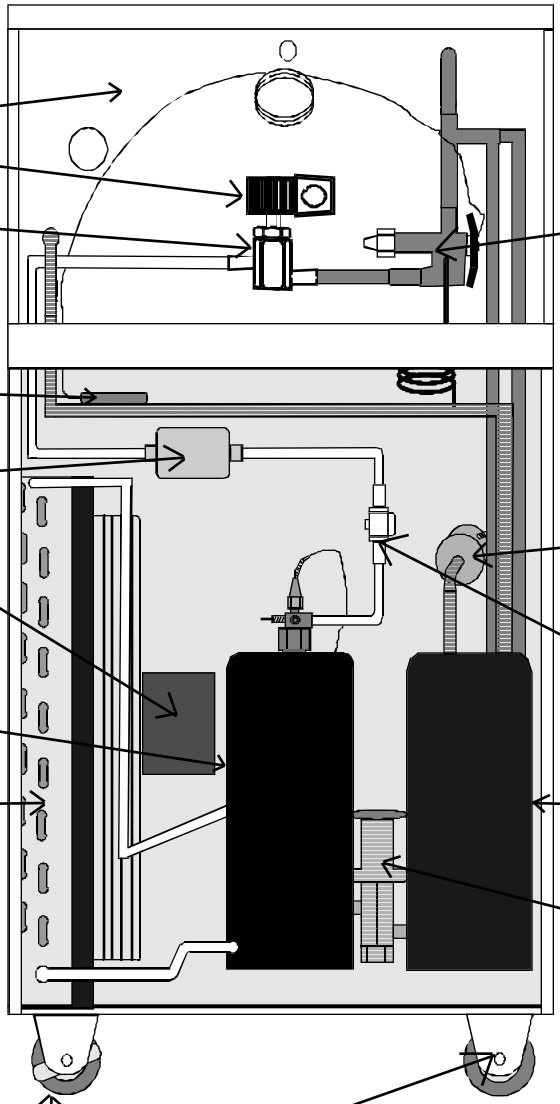

Tank coil assy....052953

Solenoid coil....009476

Solenoid valve....009475

TXV....009602

Sensing bulb part of TXV

Filter/dryer....009320

Fan motor....007522 or 007404

Suction filter....009324

Sight glass....009604

Receiver (Part of condensing unit)

Condenser (see Condensing unit/compressor part number chart)

Accumulator (Part of condensing unit)

Hot gas valve 009138

Caster with brake....013058

Caster no brake....013057

NESLAB	HX200AC Right view
Drawing 3031.cdr	
14 Jan. 1997	Jerry Boyle

HX-200 WC right view

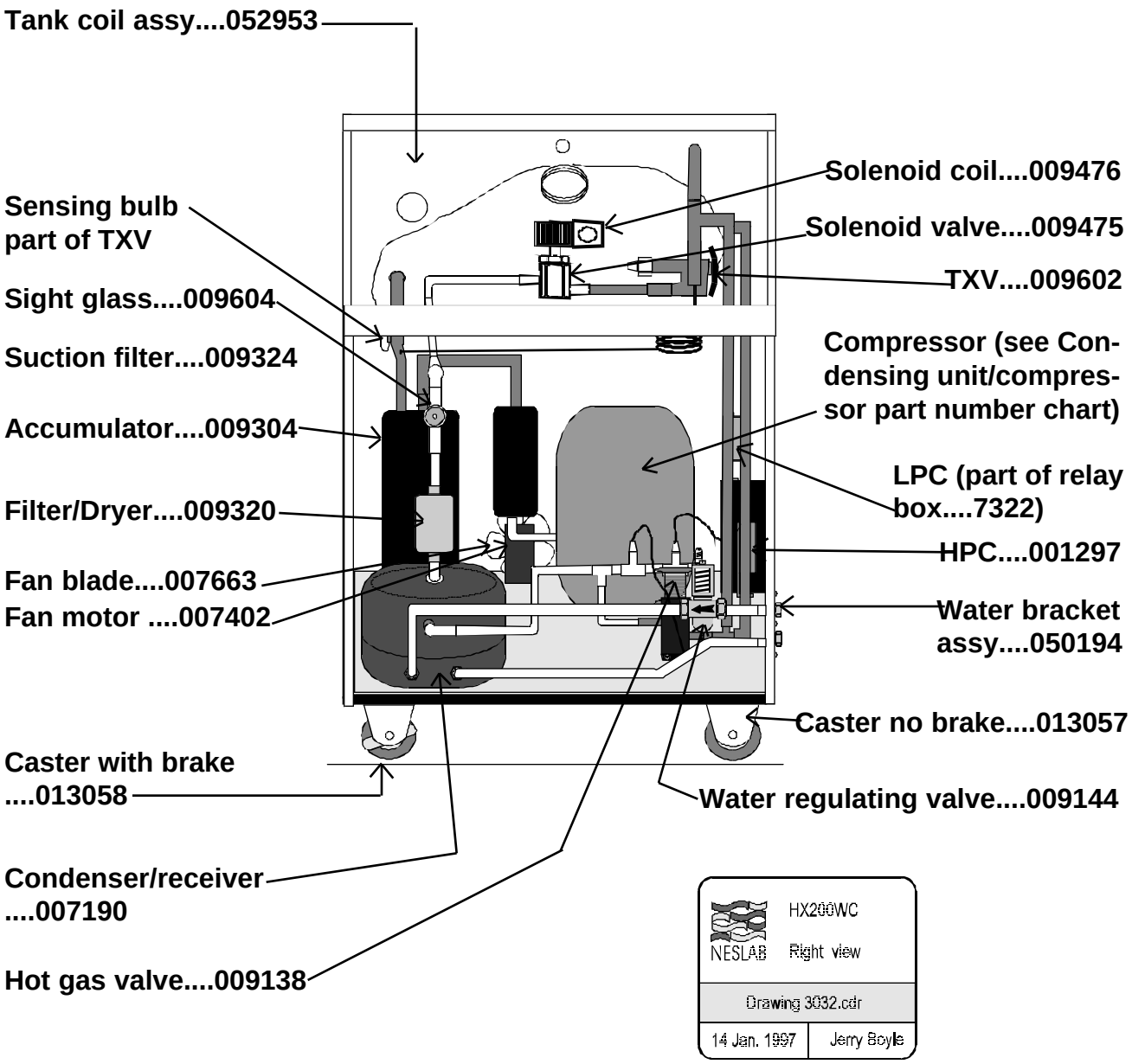

HX-300 AC rear view

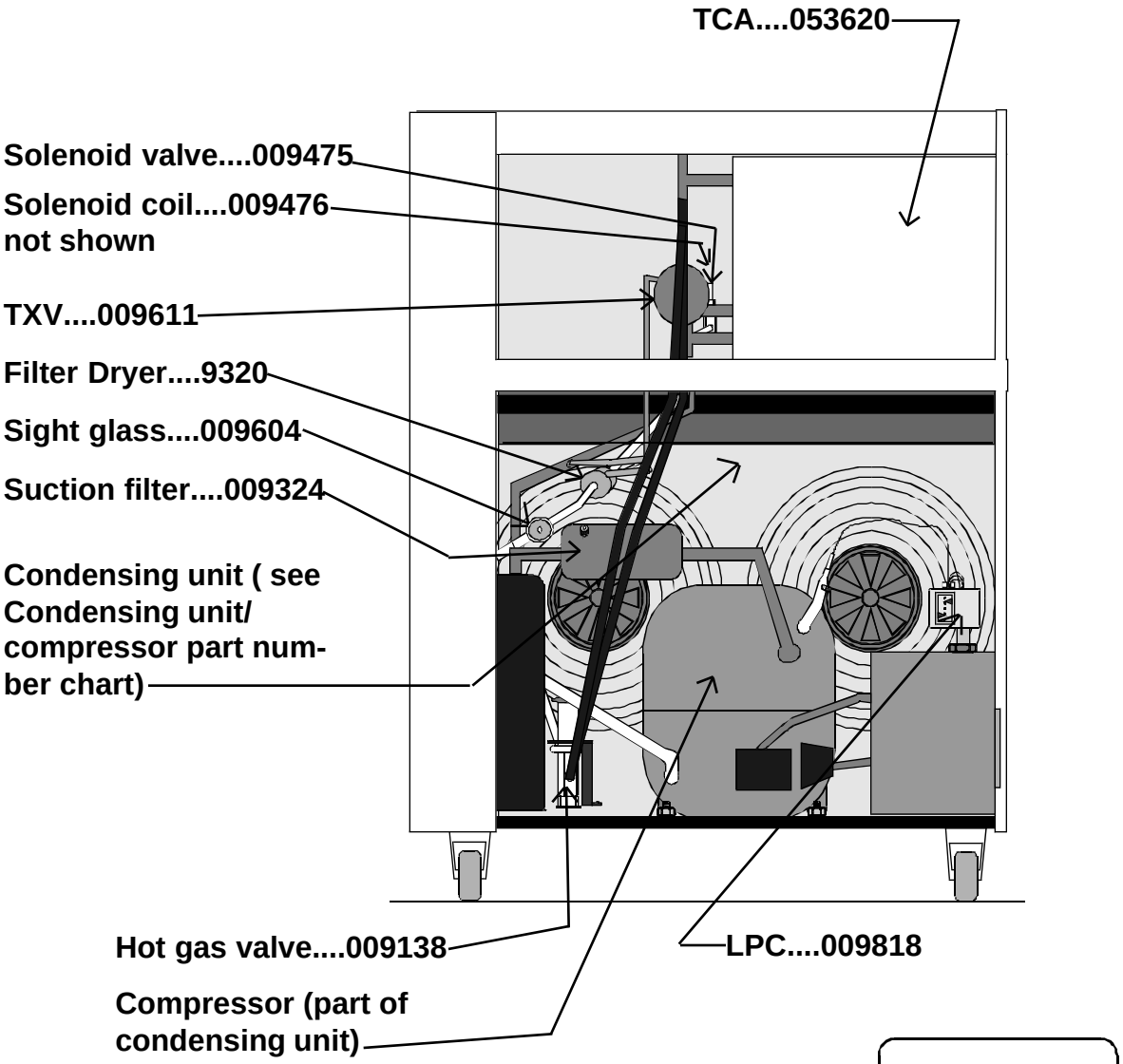

HX-300 AC right view

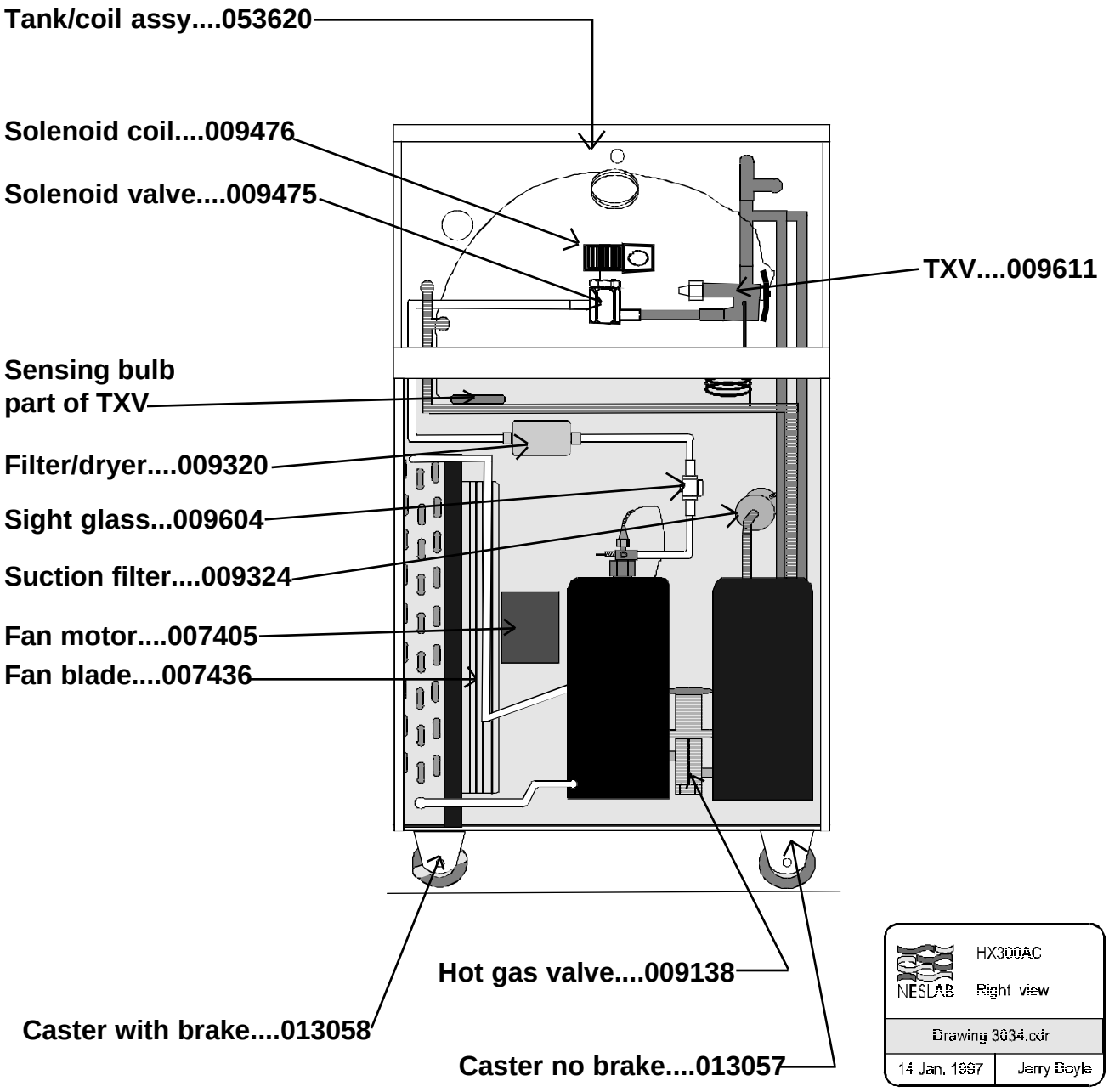

HX-300WC rear view

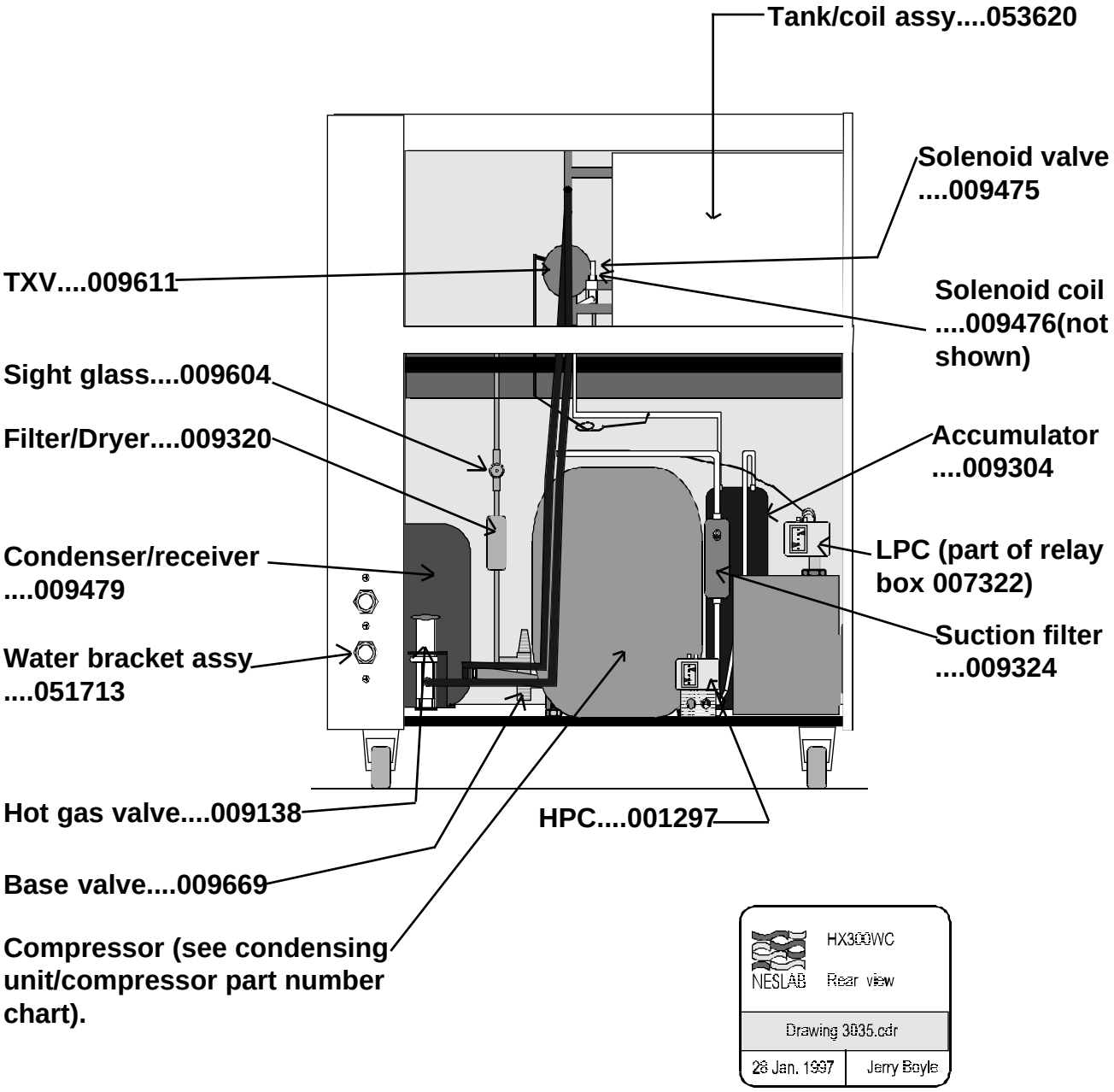

HX-300 WC right view

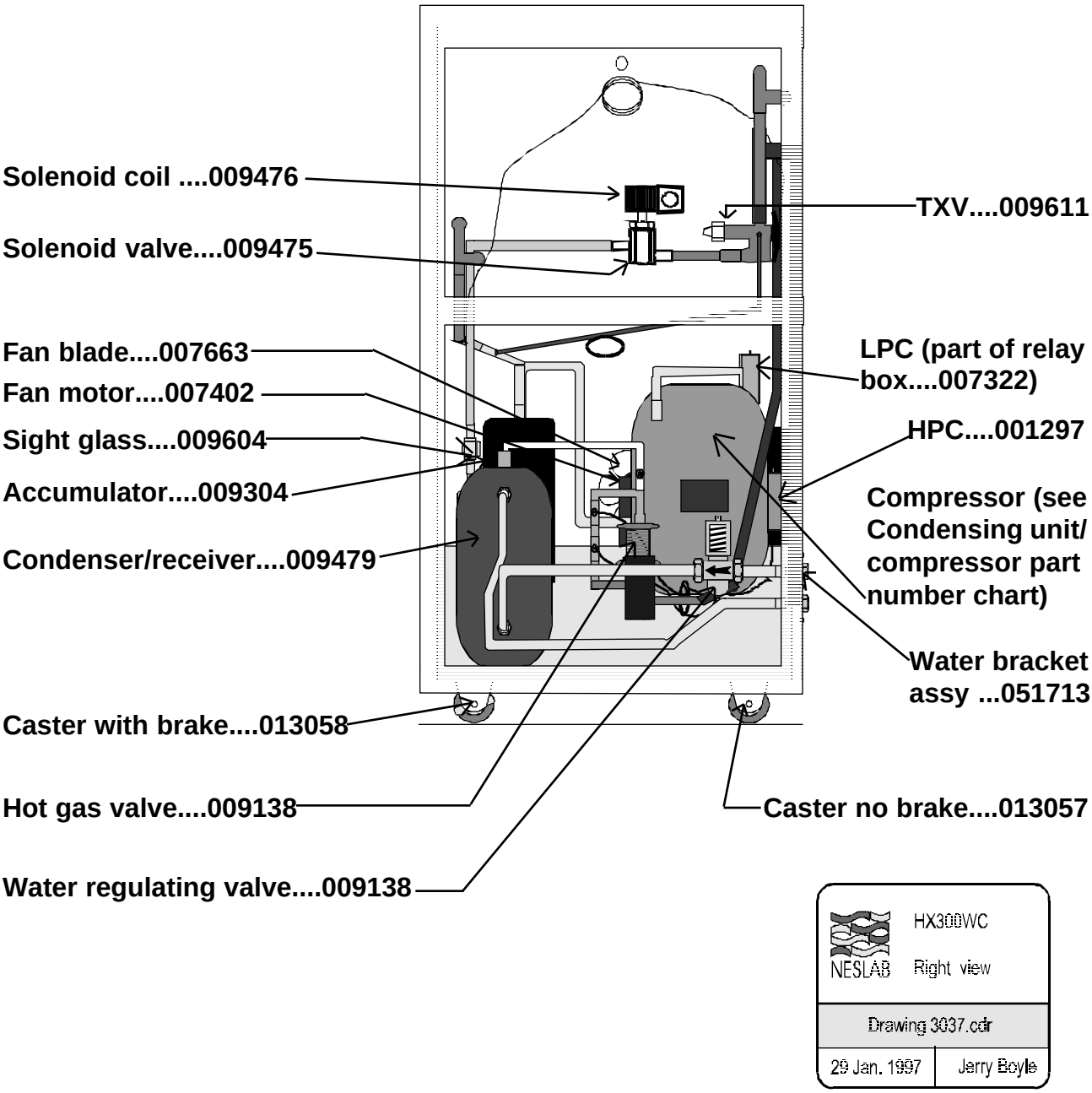

HX-500AC rear view

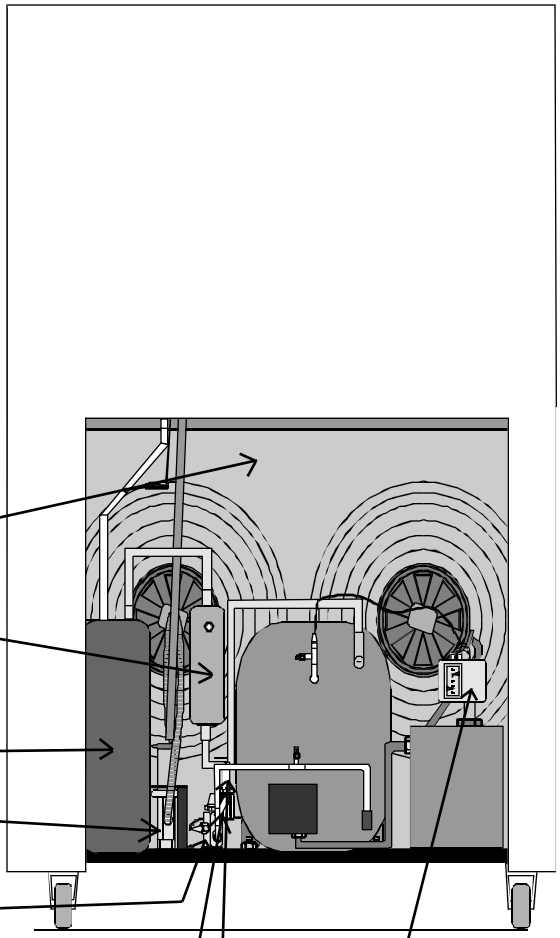

HX-500AC right view

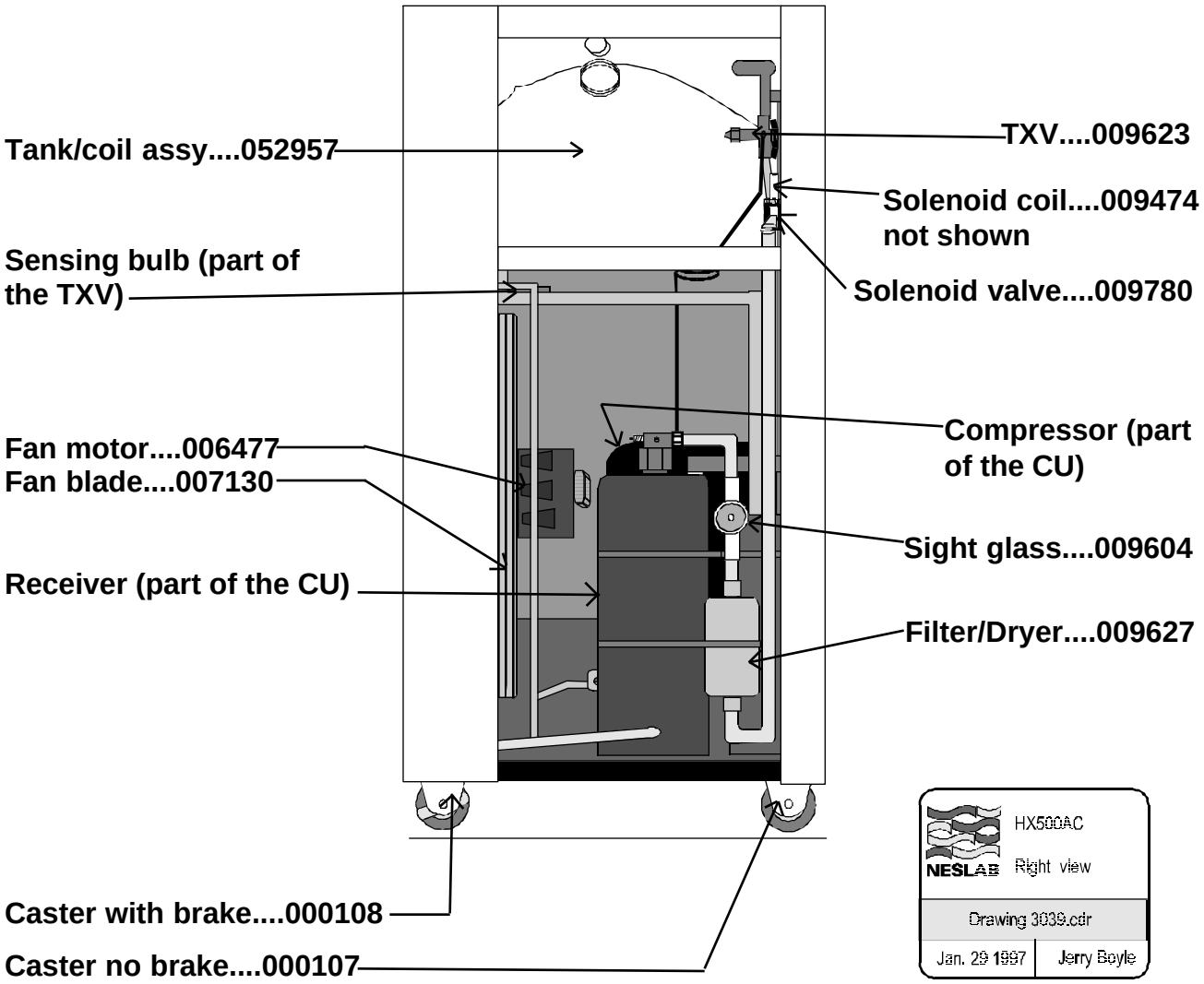

HX500WC rear view

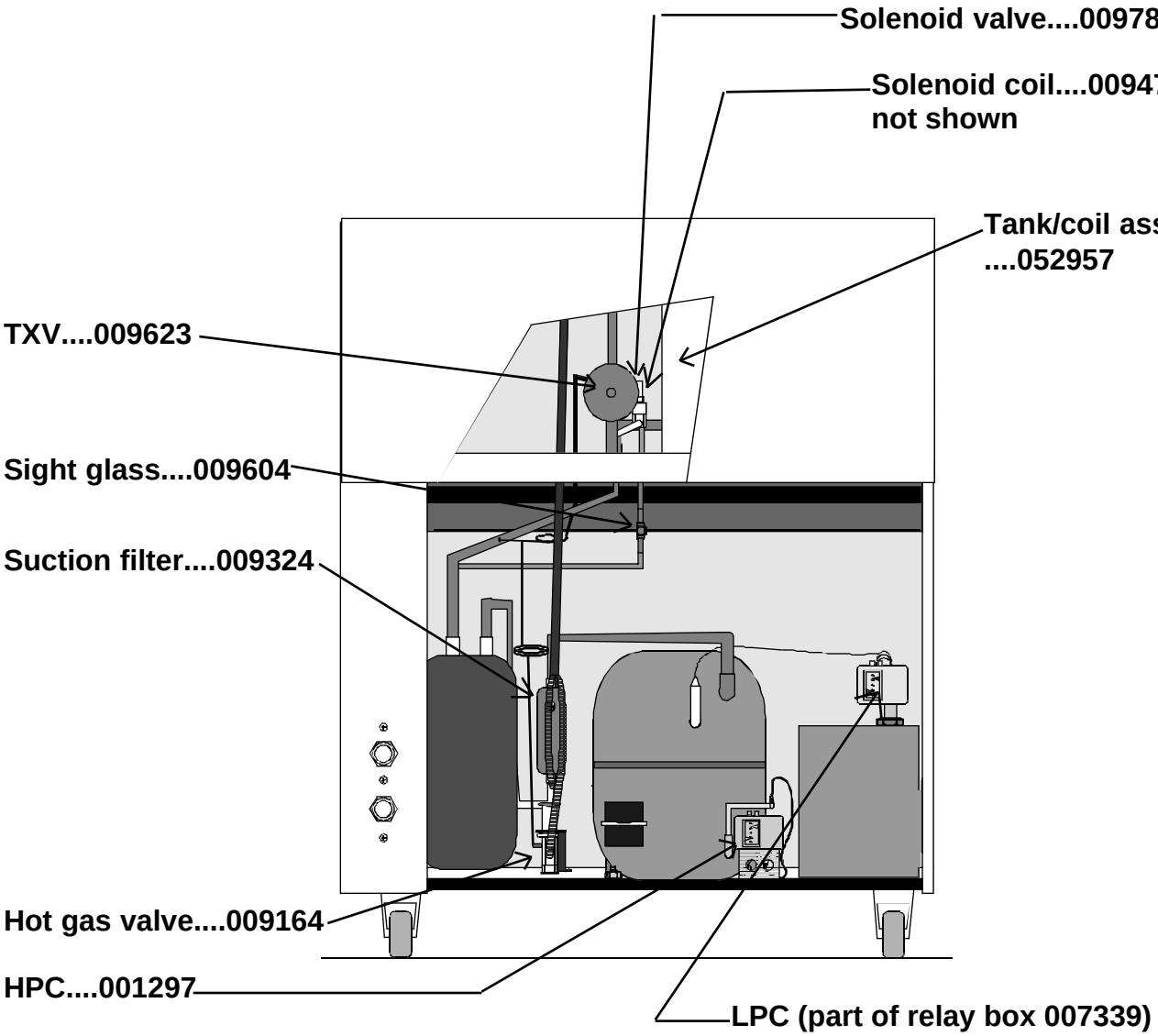

HX-500WC right view

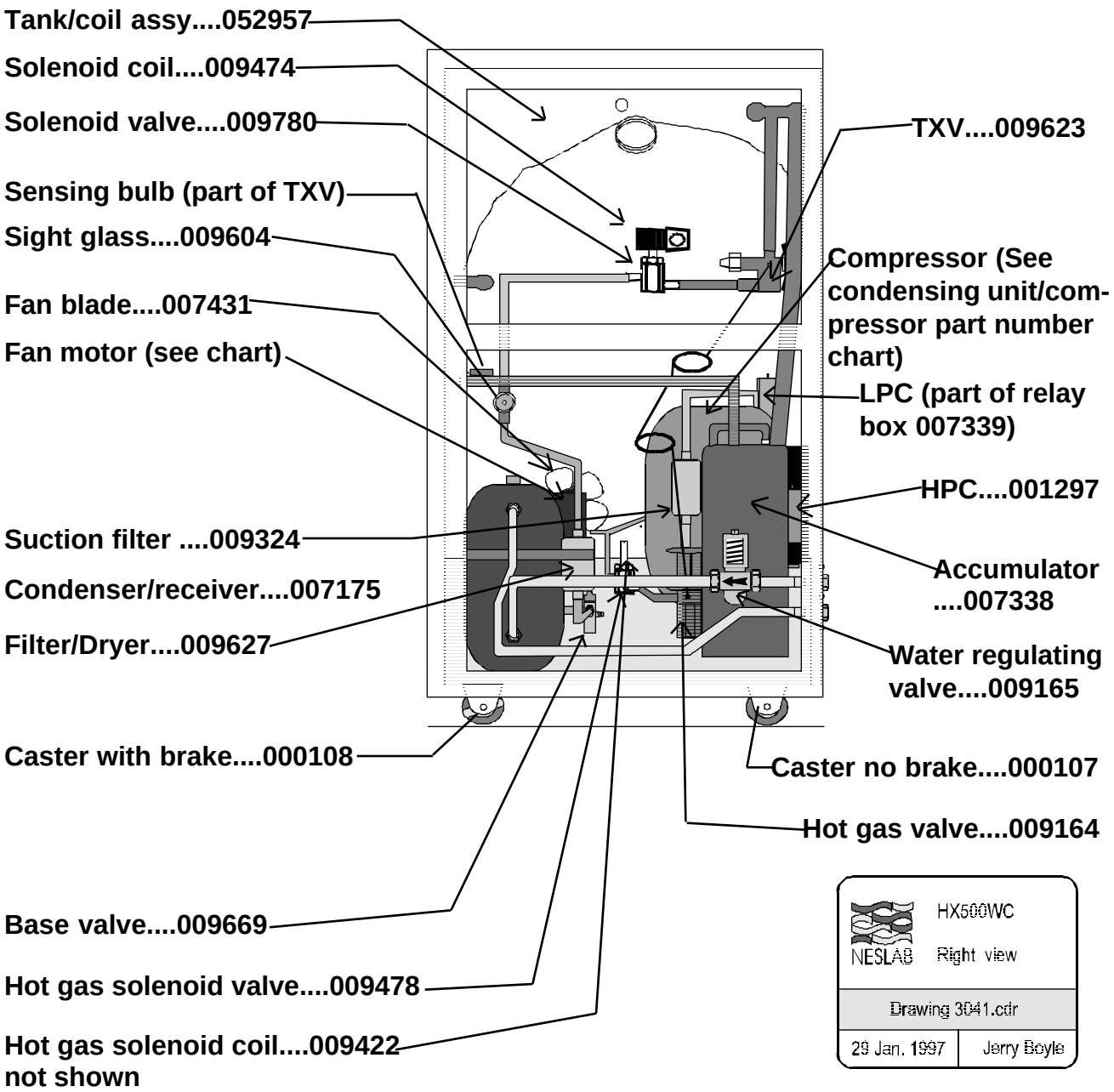

HX-750 AC right view

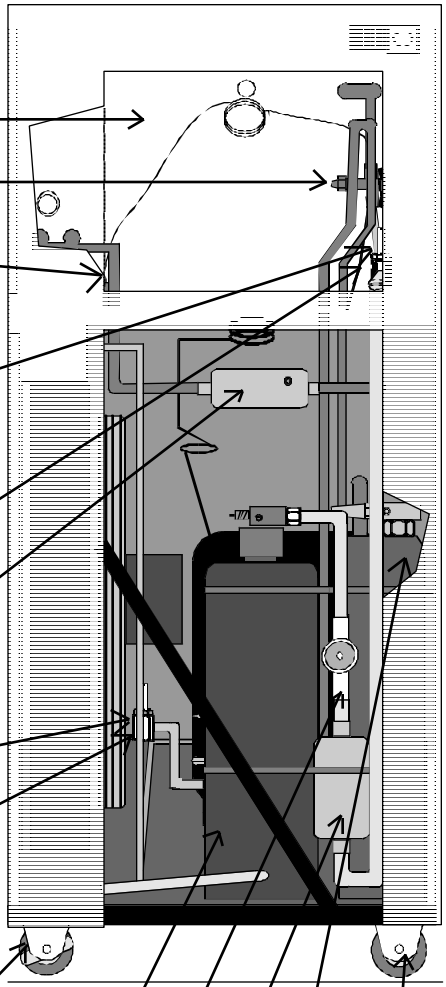

Tank/coil assy....052959

TXV....009604

Sensing bulb (part of TXV)

Liquid line solenoid valve....009780

Liquid line solenoid valve coil....009476 not shown

Suction filter....009327

Hot gas solenoid valve....009478

Hot gas solenoid valve coil....009422 (not shown

Caster with brake....000108

Receiver (part of CU)

Sight glass....009604

Filter/dryer....009627

Accumulator (part of the CU)

Caster no brake....000107

NESLAB

HX750AC

Right view

Drawing 3942.cdr

Jan. 16 1997 | Jerry Beyle

HX-750 AC rear view

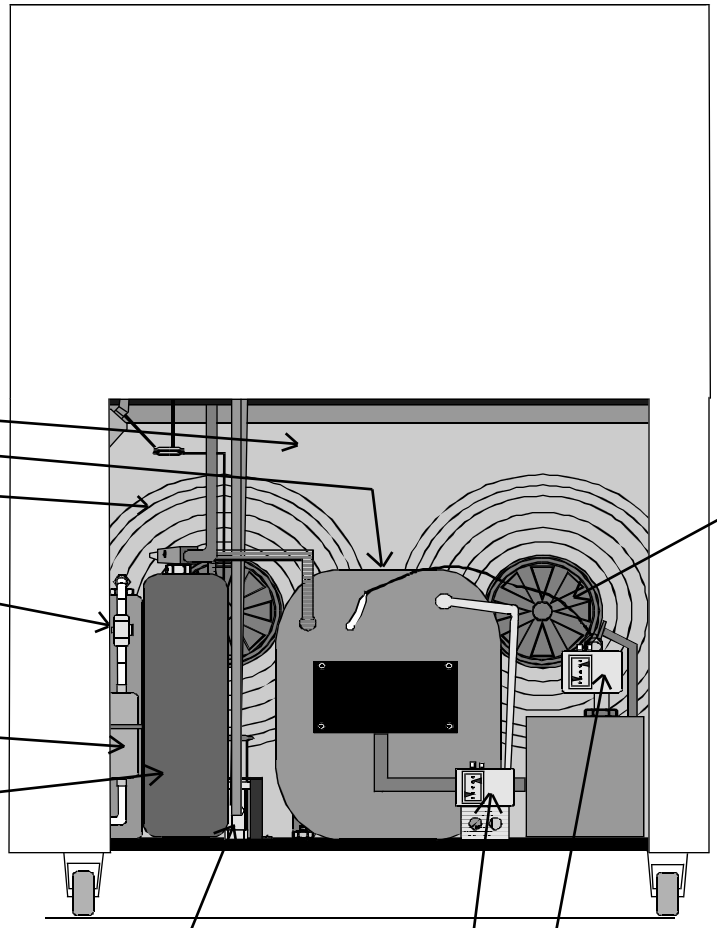

HX-750WC rear view

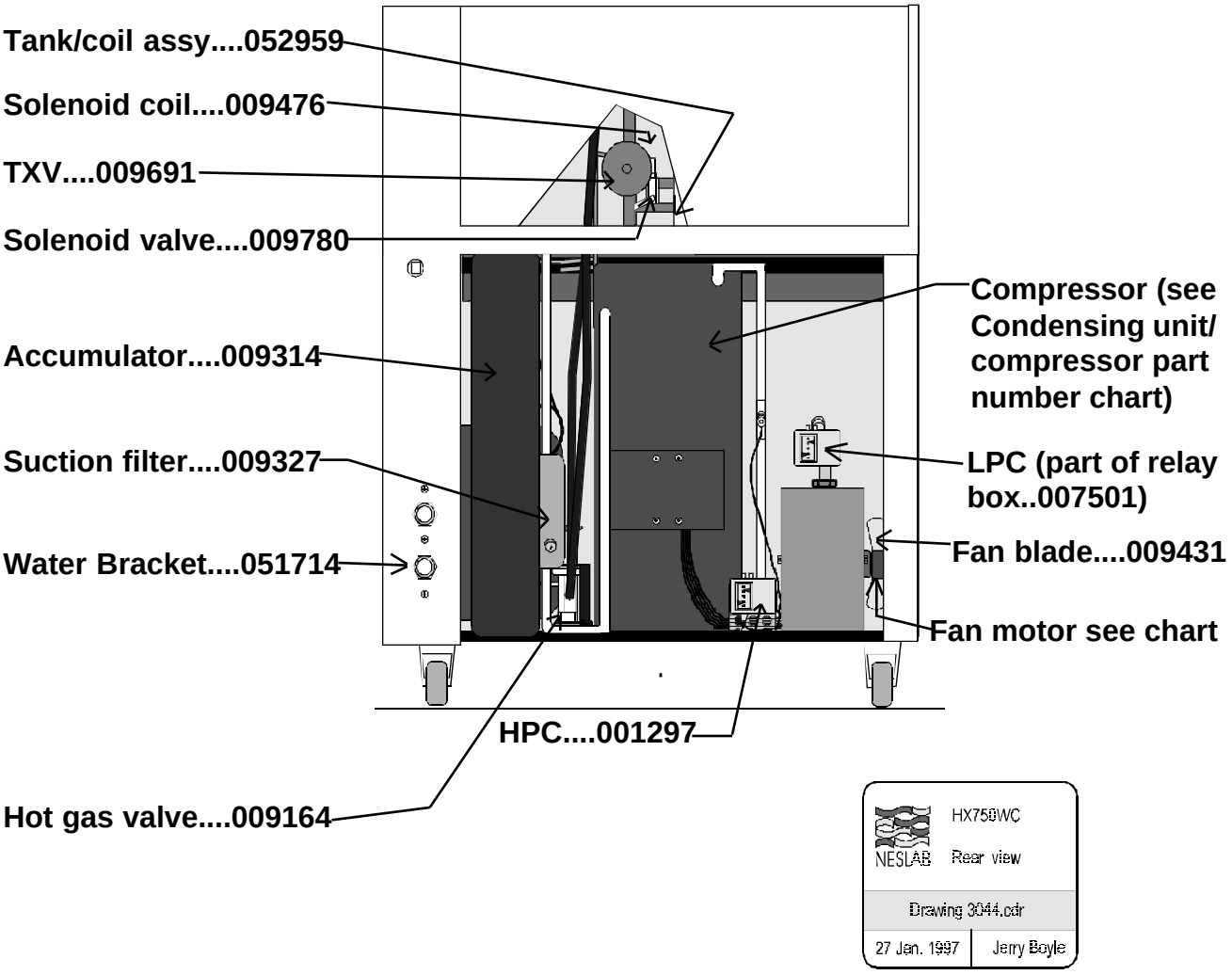

HX-750WC right view

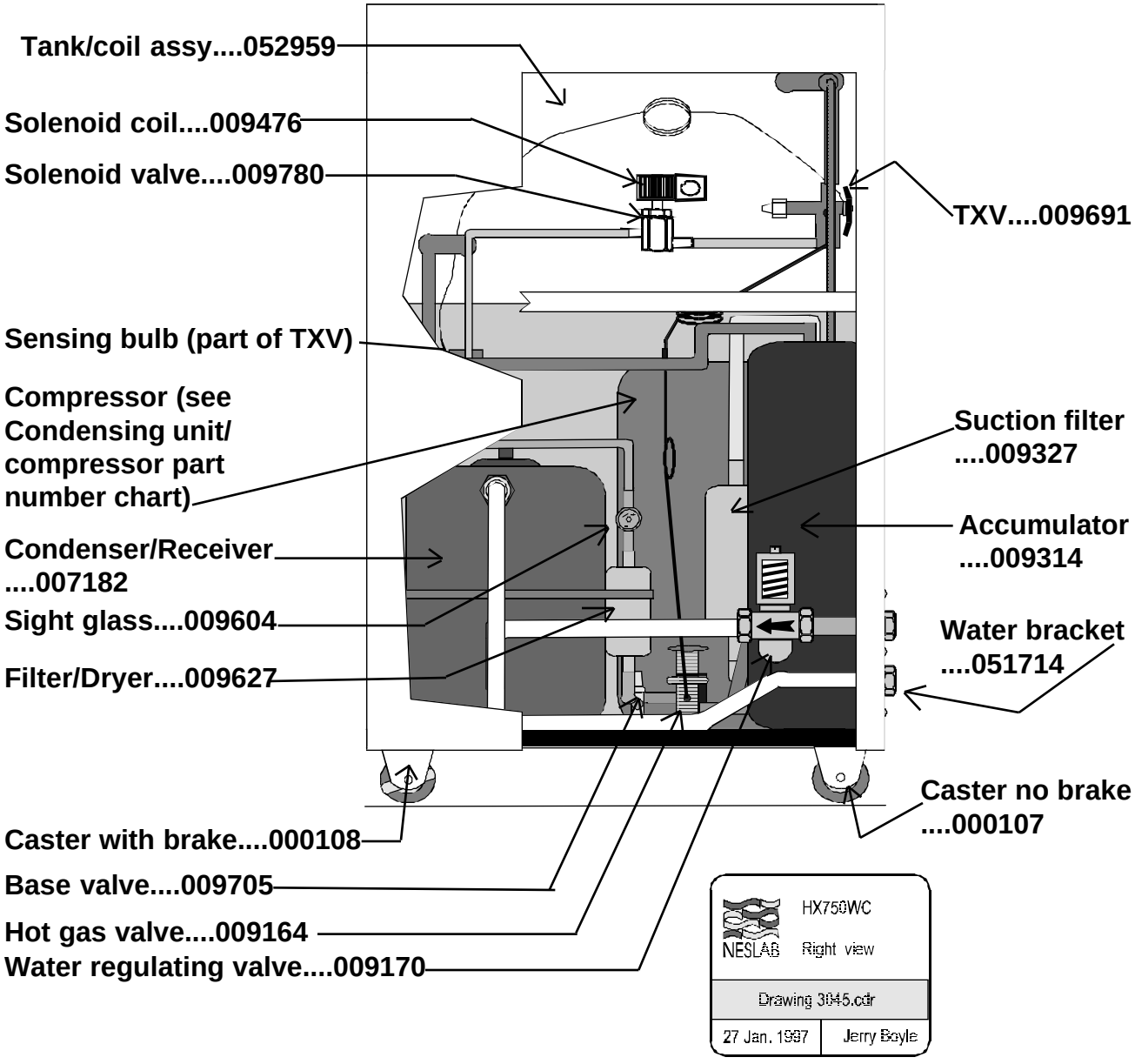

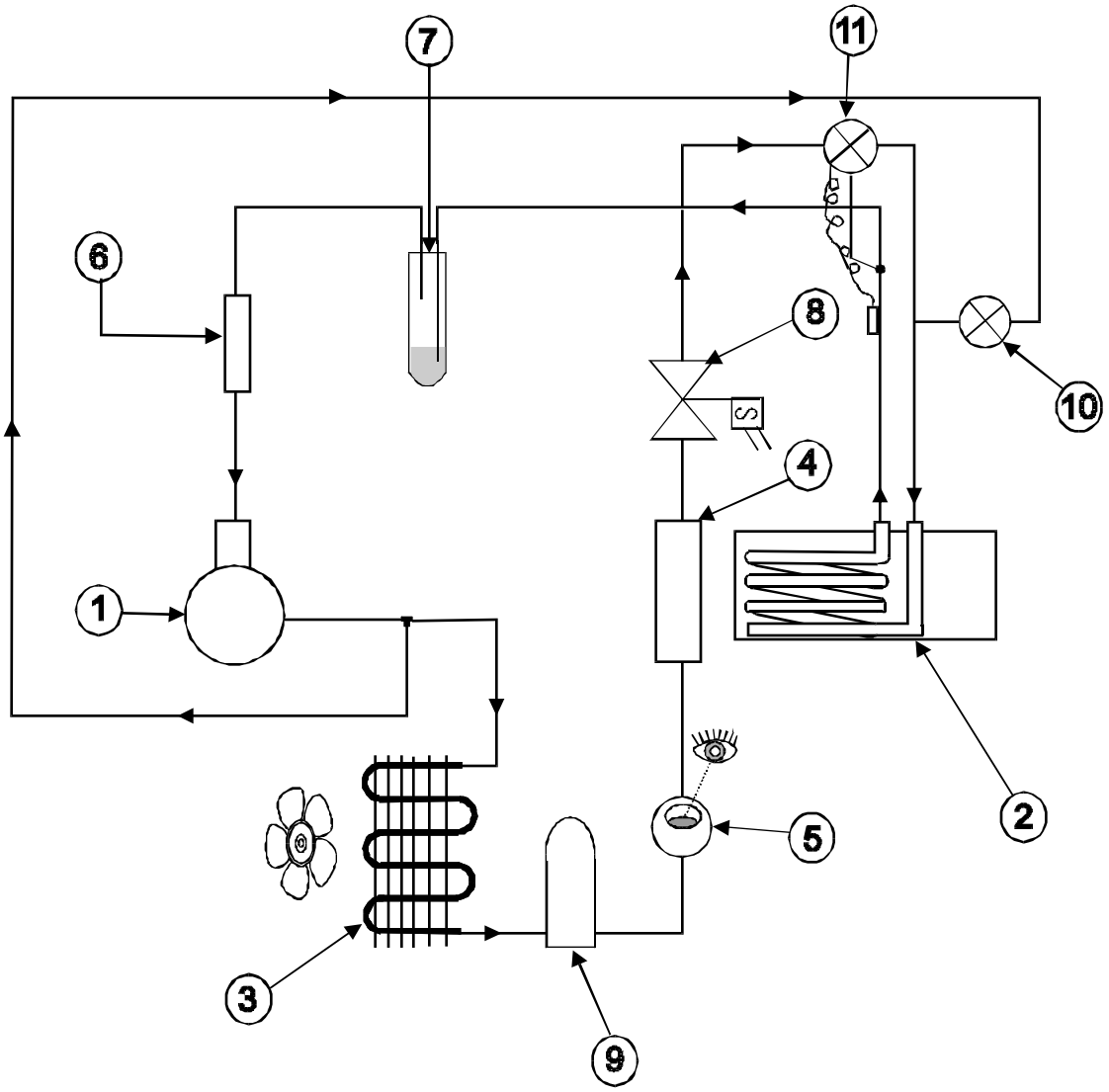

11	1	TXV
10	1	Valve
9	1	Receiver
8	1	Solenoid Valve
7	1	Accumulator
6	1	Suction Filter
5	1	Sight Glass
4	1	Dryer
3	1	Condenser
2	1	Cooling Coil Tank
1	1	Compressor

Hot Gas By Pass

R 22
Refrigeration System

200-220V/50/3
208-220v/60/3
HX-200 - 750 A/C

HX-200 to 750 A/C
Flow diagram R22
Systemic

Jerry Boyle

Drawing HX2-750A.cdr

3 Jan 1997	Jerry Boyle

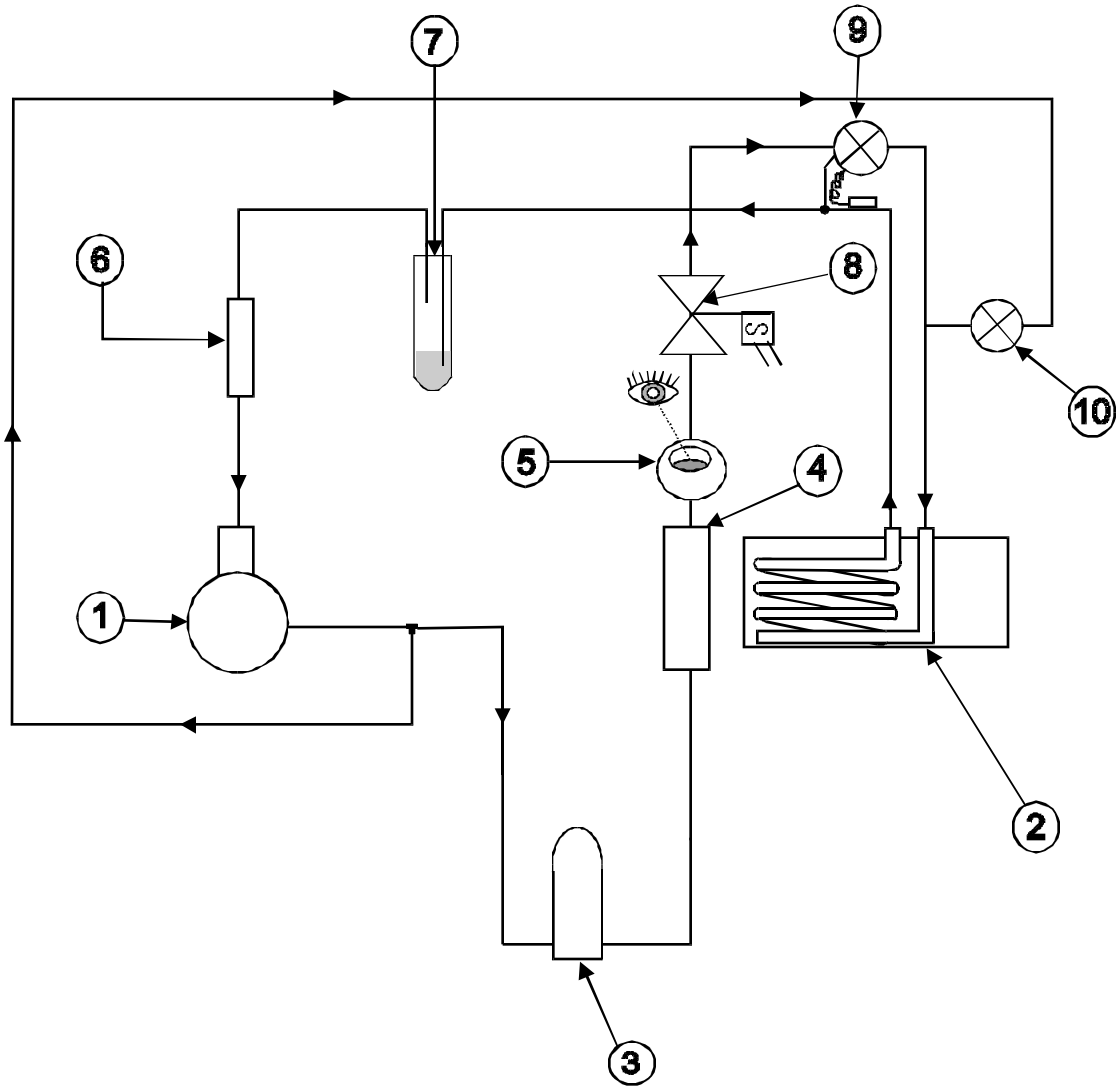

10	1	Valve	Hot Gas Bypass
9	1	TXV	
8	1	Solenoid Valve	Normally Closed
7	1	Accumulator	
6	1	Suction Filter	
5	1	Sight Glass	
4	1	Dryer	
3	1	Condenser/Receiver	
2	1	Cooling Coil Tank	
1	1	Compressor	

R 22
Refrigeration System

200-220/50/3 208-220/60/3 HX 200-750 W/C HX2-750W.cdr

HX-200 - 750 W/C
Flow diagram R22
Systemic

Jerry Boyle

Drawing HX2-750W.cdr

3 Jan 1997	Jerry Boyle

Pump Flow Diagram (CP Pumps)

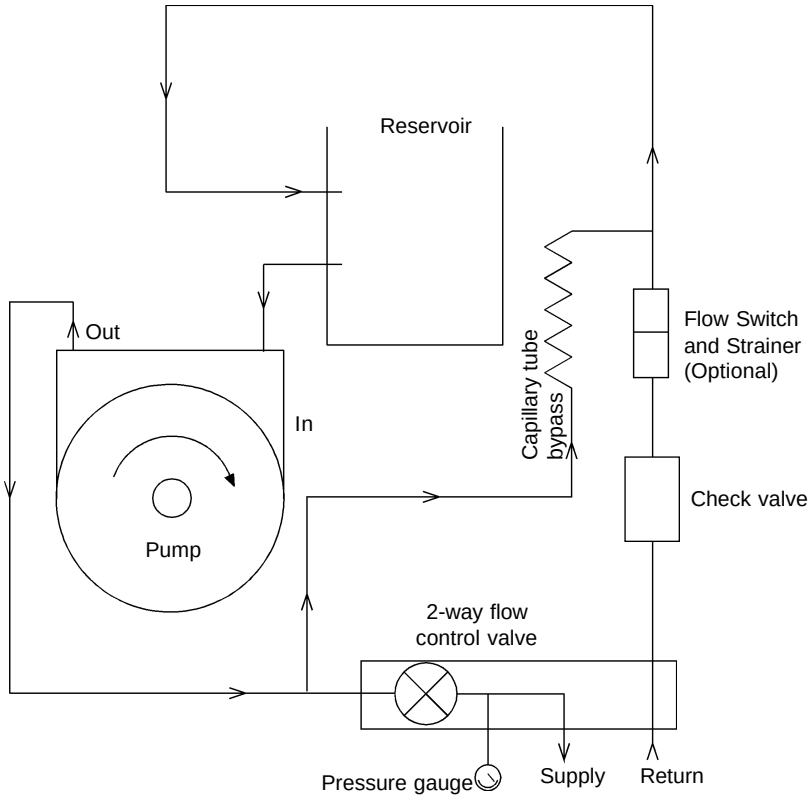

Pump Flow Diagram (PD and TU Pumps)

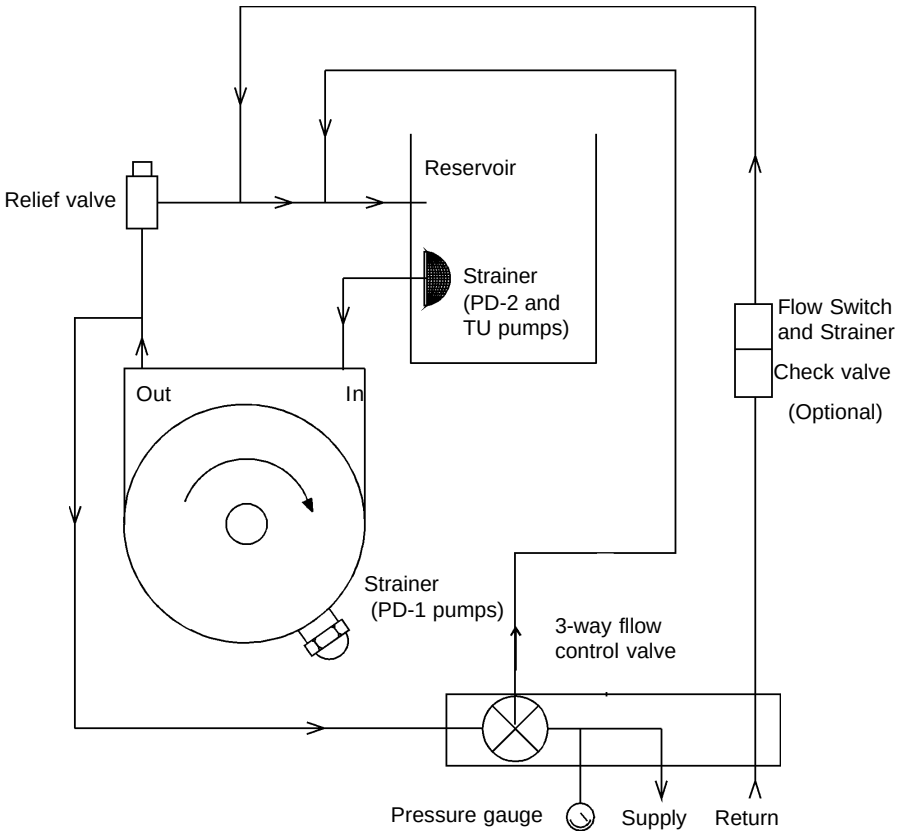

NESLAB

HX-200, HX-300, HX-500 & HX-750

NESLAB Manual P/N U00041
Rev. 30 Jan 1997

NESLAB online
Product Service Information, Electronic Catalog, Applications Notes, MSDS Forms, e-mail.

Call our bulletin board system
(603)427-2490
Set modem to 8-N-1 protocol, 1200 - 14400 baud

Voice Info: (800) 4-NESLAB

Comments on this manual can be sent to:
NESLAB@lifesciences.com

or visit our Web page at:
http://www.neslabinc.com

Service Manual

Constant Temperature Bath/Circulators
Immersion Coolers
Recirculating Chillers

ISO 9001 REGISTERED

NESLAB

HX Series
Recirculating Chiller
TC-200 Controller

Thermo NESLAB Manual P/N U00506
Rev. 06/20/02

Installation and Operation Manual



HX Series Recirculating Chiller
Installation and Operation Manual

Table of Contents

PREFACE

Compliance 5
Unpacking 5
Warranty 5
NES-care 5
After-sale Support 5

SECTION I
Safety

Warnings 6

SECTION II
General Information

Description 7
Specifications 8
Cooling Capacity 9
Pump Capacity 10

SECTION III
Installation

Site (Air-cooled Units) 12
Site (Water-cooled Units) 14
Electrical Requirements 16
Plumbing Requirements 17
Fluids 19
Water Quality Standards and Recommendations 20
Filling Requirements 21

SECTION IV
Operation

Start Up/Shut Down 22
Digital Controller 23
Setpoint 23
Setup Loop 24
Flow Control 26
Pressure Gauge 26

SECTION VI
Optional Features

Interlock Package 27
Automatic Refill Device 27
Heater Package 28
External Pressure Regulator 30
Nitrogen Purge 31
Particulate Filters 31

SECTION VII
Maintenance

Service Contracts 32
Condenser Cleaning 32
Hoses 32
Algae 32

SECTION VIII
Service

Configuration 33
Reservoir Cleaning 34
Pump Strainer 35
Error Codes 36
Pump Motor Lubrication 37
Phase Rotation 37
High/Low Pressure Cutouts 38
Pump Motor Overload Protector 38
Pressure Relief Valve 39
Suction Discharge Pressure and Speed Check 39

SECTION IX
Troubleshooting

Displaying Software Version 40
Checklist 40
Service Assistance 41

SECTION X
Diagrams

Refrigeration Flow (HX-75 and HX-150) 42
Refrigeration Flow (HX-300 through HX-750) 42
Pump Flow (CP Pumps) 43
Pump Flow (PD and TU Pumps) 43
Dimensions 44

WARRANTY

Quick Start Procedures Air-Cooled Models

Installation

Position the unit so the intake and discharge are not impeded. Inadequate ventilation will cause a reduction in cooling capacity and, in extreme cases, compressor failure.

Avoid excessively dusty areas and institute a periodic cleaning schedule. For proper operation, the unit needs to pull substantial amounts of air through a condenser. A build up of dust or debris on the fins of the condenser will lead to a loss of cooling capacity.

The unit will retain its full rated capacity in ambient temperatures up to approximately +24°C.

Ensure the voltage of the power source meets the specified voltage, ±10%.

The plumbing connections are located on the right side of the unit and are labelled SUPPLY and RETURN. These connections are ¾ inch FPT, 1 inch FPT for units with a CP-75 or TU-9 pump. Remove the plastic protective plugs from both plumbing connections. Connect the SUPPLY fitting to the inlet of your application. Connect the RETURN fitting to the outlet of your application.

To fill the reservoir open the access panel on the left rear corner of the case top and remove the reservoir cover by unscrewing the thumbscrews. Fill the reservoir to within one inch of the top. If the fluid capacity of your application and recirculation lines is significant, have extra fluid on hand.

Thermo NESLAB recommends using distilled/deionized water with a 0.05 to 0.1 megohm-cm reading. If you do not have access to distilled/deionized water we recommend using filtered tap water.

Operation

Before starting the unit, double-check all electrical and plumbing connections. Make sure the circulating system has been filled with cooling fluid.

On models HX-300 through HX-750, the unit must be connected to the power source for at least 12 hours to allow the compressor oil to heat and separated from the refrigerant.

To start the unit first connect it to main power. On units equipped with a circuit breaker, place it to the on position. The MAIN POWER LED will illuminate. Place the ON/OFF switch to the ON position. The COOL and IDLE LEDs on the front panel indicate the status of the refrigeration system. COOL is on when the unit is removing heat from the cooling fluid, IDLE is on when heat is being added to the fluid reservoir. As the operating temperature approaches the setpoint, the LEDs cycle.

When the unit is shut off, wait five minutes before restarting to allow time for the refrigeration pressures to equalize. If the pressures are not allowed to equalize, the compressor will short-cycle and no cooling will occur.

Temperature Adjustment

To display the temperature setpoint, while displaying the reservoir temperature press the NEXT ENTER key. To adjust the temperature setpoint use the YES/NO keys as described in this manual.

Flow Control

The RECIRCULATING FLOW CONTROL handle controls the flow rate to your application. In the full vertical position you receive full flow, the full horizontal position is no flow.

Periodic Maintenance

Periodically inspect the reservoir fluid. If cleaning is necessary, flush the reservoir with a cleaning fluid compatible with the circulating system and the cooling fluid.

The cooling fluid should be replaced periodically. When operating at low temperatures, the concentration of water in the cooling fluid will increase over time, leading to a loss of cooling capacity.

Periodic vacuuming of the condenser fins is necessary. The frequency of cleaning depends on the operating environment. We recommend making a monthly visual inspection of the condenser after initial installation. After several months, the cleaning frequency will be established.

Units with PD and TU pumps have a strainer. If debris is in the system, the strainer will prevent the material from being drawn into the pump and damaging the pump vanes.

After initial installation, the strainer may become clogged. The strainer must be cleaned after the first week of installation. After this first cleaning, a monthly visual ins-pection is recommended. After several months, the frequency of cleaning will be established.

Before cleaning the strainer, disconnect the power cord from the power source and drain the reservoir.

Quick Start Procedures Water-Cooled Models

Installation

Position the unit in a clean environment with easy access to facility cooling water and a drain. The facility water requirements must meet those specified in the instruction or unit performance will be reduced.

Ensure the voltage of the power source meets the specified voltage, ±10%.

The plumbing connections are located on the rear and right side of the unit and are labelled TAP WATER, DRAIN, SUPPLY and RETURN. Remove the plastic protective plugs from all the plumbing connections. Connect the TAP WATER fitting to the facility cooling water and the DRAIN fitting to a drain. Connect the SUPPLY fitting to the inlet of your application and the RETURN fitting to the outlet of your application. On HX-75s through HX-300s, the TAP WATER and DRAIN fittings are ½ inch FPT. On HX-500s and HX-750s, these fittings are 1 inch FPT. The SUPPLY and RETURN connections are ¾ inch FPT, 1 inch FPT for units with a CP-75 or TU-9 pump.

To fill the reservoir open the access panel on the left rear corner of the case top and remove the reservoir cover by unscrewing the thumbscrews. Fill the reservoir to within one inch of the top. If the fluid capacity of your application and recirculation lines is significant, have extra fluid on hand.

Thermo NESLAB recommends using distilled/deionized water with a 0.05 to 0.1 megohm-cm reading. If you do not have access to distilled/deionized water we recommend using filtered tap water.

Operation

Before starting the unit, double-check all electrical and plumbing connections. Make sure the circulating system has been filled with cooling fluid.

Ensure the facility water is turned on.

On models HX-300 through HX-750, the unit must be connected to the power source for at least 12 hours to allow the compressor oil to heat and separated from the refrigerant.

To start the unit first connect it to main power. On units equipped with a circuit breaker, place it to the on position. The MAIN POWER LED will illuminate. Place the ON/OFF switch to the ON position. The COOL and IDLE LEDs on the front panel indicate the status of the refrigeration system. COOL is on when the unit is removing heat from the cooling fluid, IDLE is on when heat is being added to the fluid reservoir. As the operating temperature approaches the setpoint, the LEDs cycle.

When the unit is shut off, wait five minutes before restarting to allow time for the refrigeration pressures to equalize. If the pressures are not allowed to equalize, the compressor will short-cycle and no cooling will occur.

Temperature Adjustment

To display the temperature setpoint, while displaying the reservoir temperture press the NEXT ENTER key. To adjust the temperature setpoint use the YES/NO keys as described in this manual.

Flow Control

The RECIRCULATING FLOW CONTROL handle controls the flow rate to your application. In the full vertical position you receive full flow, the full horizontal position is no flow.

Periodic Maintenance

Periodically inspect the reservoir fluid. If cleaning is necessary, flush the reservoir with a cleaning fluid compatible with the circulating system and the cooling fluid.

The cooling fluid should be replaced periodically. When operating at low temperatures, the concentration of water in the cooling fluid will increase over time, leading to a loss of cooling capacity.

Units with PD and TU pumps have a strainer. If debris is in the system, the strainer will prevent the material from being drawn into the pump and damaging the pump vanes.

After initial installation, the strainer may become clogged. The strainer must be cleaned after the first week of installation. After this first cleaning, a monthly visual inspection is recommended. After several months, the frequency of cleaning will be established.

Before cleaning the strainer, disconnect the power cord from the power source and drain the reservoir.

Preface

Compliance

Products tested and found to be in compliance with the requirements defined in the EMC standards defined by 89/336/EEC as well as Low Voltage Directive (LVD) 73/23/EEC can be identified by the CE label on the rear of the unit. The testing has demonstrated compliance with the following directives:

LVD, 73/23/EEC	Complies with UL 3101-1:93
EMC, 89/336/EEC	EN 55011, Class A Verification EN 50082-1:1992 IEC 1000-4-2:1995 IEC 1000-4-3:1994 IEC 1000-4-4:1995

For any additional information refer to the Letter of Compliance that shipped with the unit (Declaration of Conformity).

Unpacking

Retain all cartons and packing material until the unit is operated and found to be in good condition. If the unit shows external or internal damage, or does not operate properly, contact the transportation company and file a damage claim. Under ICC regulations, this is your responsibility.

On units with a remote control box, the box is packed in a separate carton. Be sure to locate this separate carton; do not dispose of it by mistake.

Warranty

Units have a warranty against defective parts and workmanship for one full year from date of shipment. See back page for more details.

NES-care Extended Warranty Contract

- Extend parts and labor coverage for an additional year.
- Worry-free operation.
- Control service costs.
- Eliminate the need to generate repair orders.
- No unexpected repair costs.

Other contract options are available. Please contact Thermo NESLAB for more information.

After-sale Support

Thermo NESLAB is committed to customer service both during and after the sale. If you have questions concerning the operation of your unit or the information in this manual, contact our Sales Department. If your unit fails to operate properly or if you have questions concerning spare parts or Service Contracts, contact our Service Department.

Before calling, please refer to the serial number label on the rear of the case top to obtain the following information (see Section II, Description for the serial number label location):

- BOM number _____

- Serial number _____

- Software version (see page 40) _____

Section I Safety

Warnings

Make sure you read and understand all instructions and safety precautions listed in this manual before installing or operating your unit. If you have any questions concerning the operation of your unit or the information in this manual, contact our Sales Department for assistance (see Preface, After-sale Support).

Performance of installation, operation, or maintenance procedures other than those described in this manual may result in a hazardous situation and may void the manufacturer's warranty.

Transport the unit with care. Sudden jolts or drops can damage the refrigeration lines.

Do not attempt to defeat any of the interlock switches or safety features built into the unit.

Observe all warning labels.

Never remove warning label.

Never operate damaged or leaking equipment.

Never operate the unit without cooling fluid in the fluid reservoir.

Make sure the unit is off before connecting or disconnecting the power cord or other cables.

Always turn off the unit and, if applicable, disconnect the power cord from the power source before performing any service or maintenance procedures, or before moving the unit.

Always empty the fluid reservoir before moving the unit.

Never operate equipment with damaged power cords.

Refer service and repairs to a qualified Thermo NESLAB technician.



In addition to the safety warnings listed above, warnings are posted throughout the manual. These warnings are designated by an exclamation mark inside an equilateral triangle with text highlighted in bold. Read and follow these important instructions. Failure to observe these instructions can result in permanent damage to the unit, significant property damage, or personal injury or death.



The lightning flash with arrow symbol, within an equilateral triangle, is intended to alert the user to the presence of non-insulated "dangerous voltage" within the unit's enclosure. The voltage may be of significant magnitude to constitute a risk of electrical shock.

Section II General Information

Description

The HX Series Recirculating Chiller is designed to provide a continuous flow of cooling fluid at a constant temperature and volume.

The unit consists of an air-cooled or water-cooled refrigeration system, a fluid reservoir, a fluid recirculation pump, and a digital temperature controller. Optional remote temperature controllers and remote probes are also available.

HX units are available with a large number of options. This manual explains how to install, operate, and maintain a “standard” HX unit. This manual also explains some of the available options. Supplemental manuals are supplied with units equipped with options not covered in this manual.

Throughout the manual, you will be asked to consult the unit’s serial number label, or the pump identification label, or both, for specific information. Both labels are located on the rear of the case top.

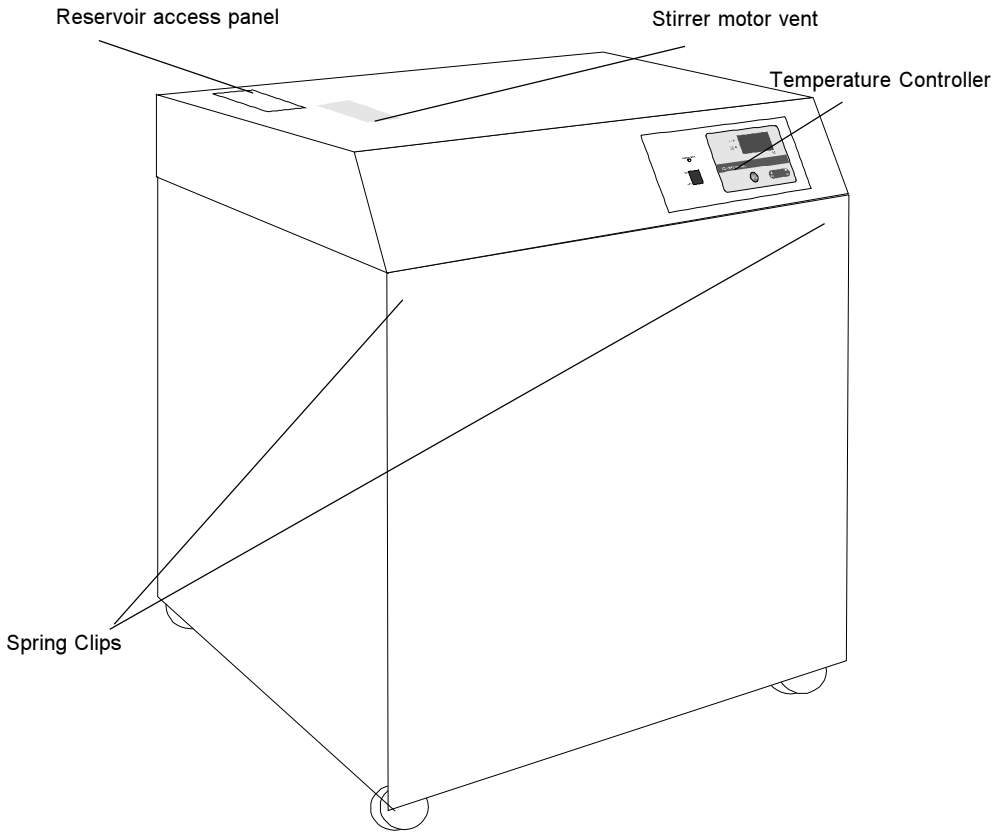

Specifications

	HX-75	HX-150	HX-300
Temperature Range[1]	+5°C to +35°C		
Temperature Stability	±0.1°C		
Unit Dimensions[2] (H x W x D)			
Inches	36¾ x 23¼ x 18¾	40 5/8 x 26¼ x 21 1/8	46 7/8 x 33¾ x 25¼
Centimeters	93.3 x 59.0 x 47.6	103.2 x 66.7 x 53.6	119.1 x 85.7 x 64.1
Reservoir Volume			
Gallons	5.0	8.0	15.0
Liters	18.9	30.3	56.8
Shipping Weight			
Pounds	261	320	477
Kilograms	118	145	216

	HX-500	HX-750
Temperature Range[1]	+5°C to +35°C	
Temperature Stability	±0.1°C	
Unit Dimensions[2] (H x W x D)		
Inches	51 5/8 x 46 x 28¾	64¾ x 46 x 29
Centimeters	131.1 x 116.8 x 73.0	163.2 x 116.8 x 73.7
Reservoir Volume		
Gallons	28.0	40.0
Liters	106.0	151.4
Shipping Weight		
Pounds	746	971
Kilograms	338	440

1. Modified temperature ranges from -15°C to +90°C are available.
2. Model HX-750 with a water-cooled refrigeration system has the same dimensions as the HX-500. For additional dimensions see page 44.

Cooling Capacity

Cooling capacity will vary depending on fluid temperature, ambient temperature, and cooling fluid.

Cooling capacities were obtained under the following conditions:

1. *air-cooled unit operating at +20°C (+68°F) ambient temperature.*
2. *cooling fluid with specific heat of 1.0 was used for fluid temperatures from +5°C to +35°C.*

HX-75 & HX-150

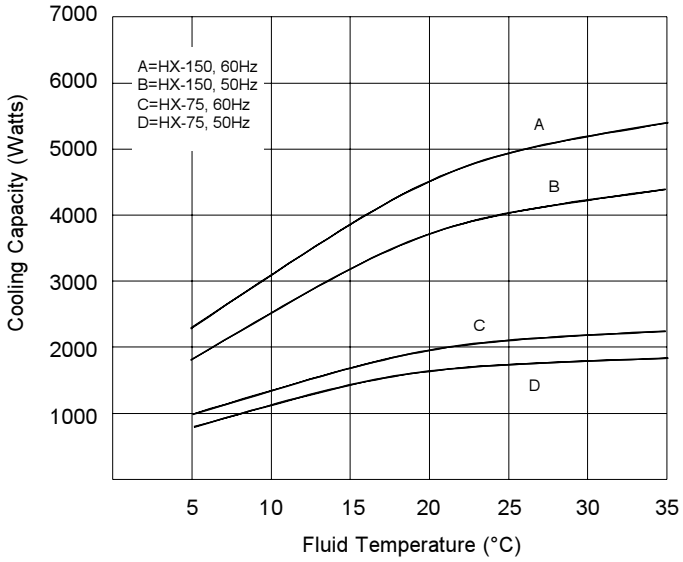

HX-300 & HX-500

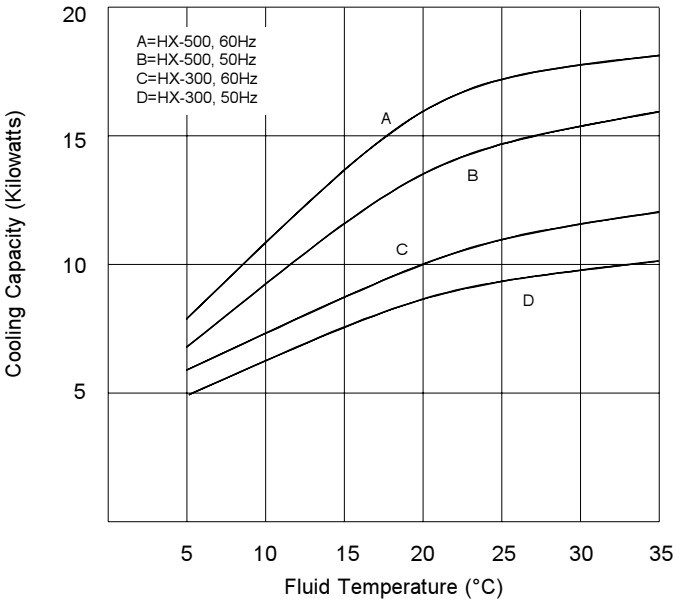

HX-750

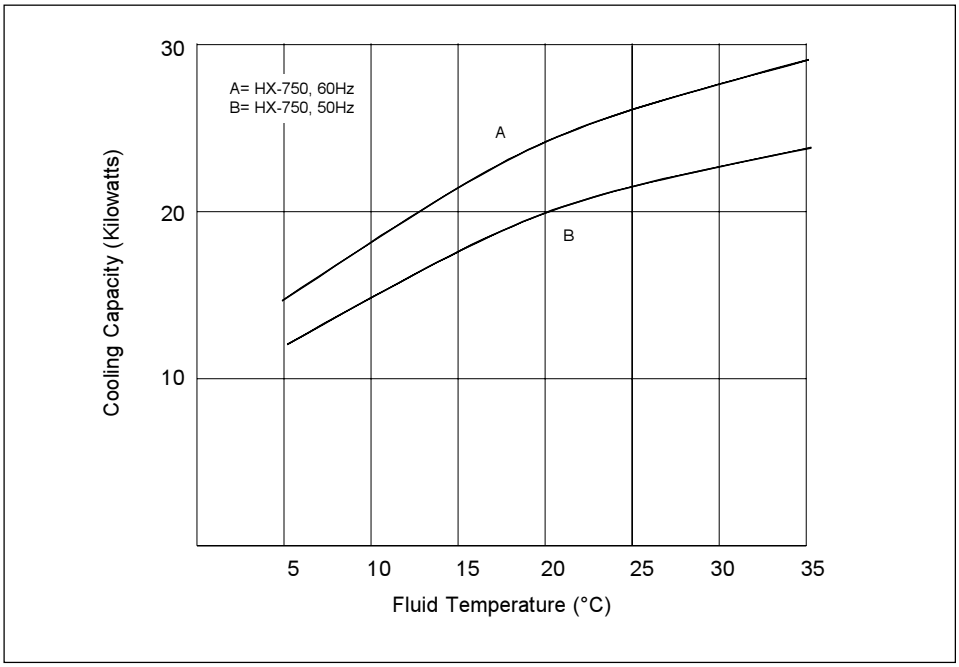

Pump Capacity

HX units are available with one of three standard pump types: positive displacement (PD), centrifugal (CP), and turbine (TU). Refer to the pump identification label on the rear of the case top to identify the specific pump in your unit.

PD2 & TU1

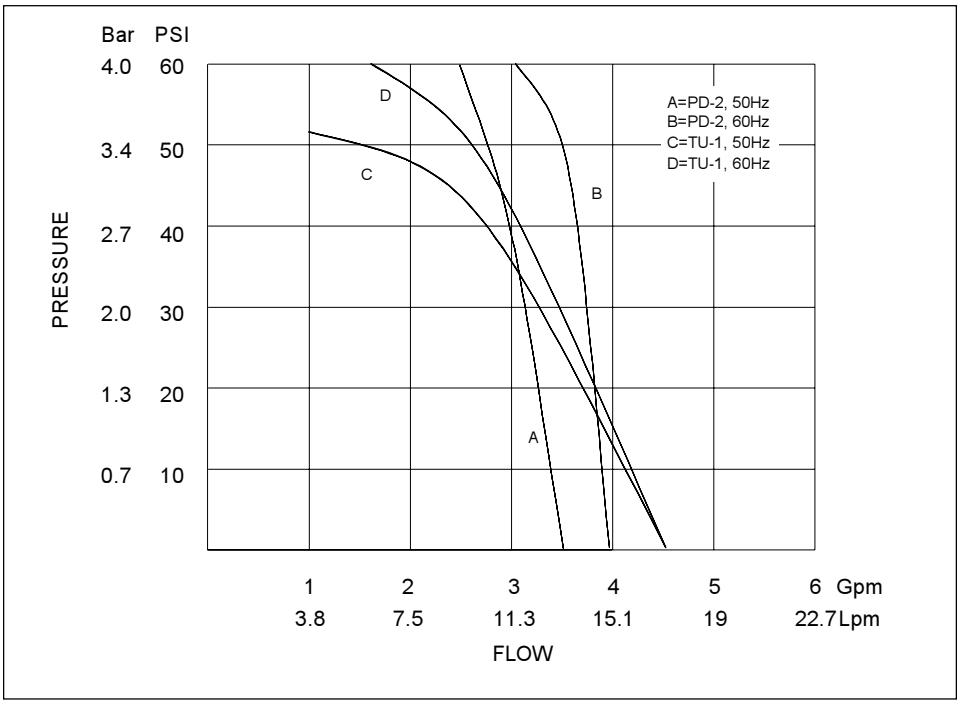

CP

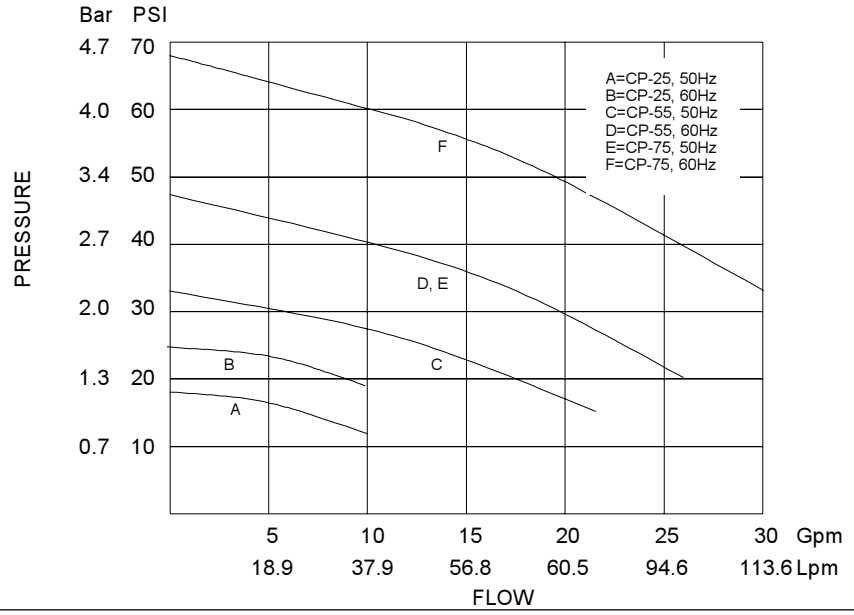

TU-3, 5 & 6

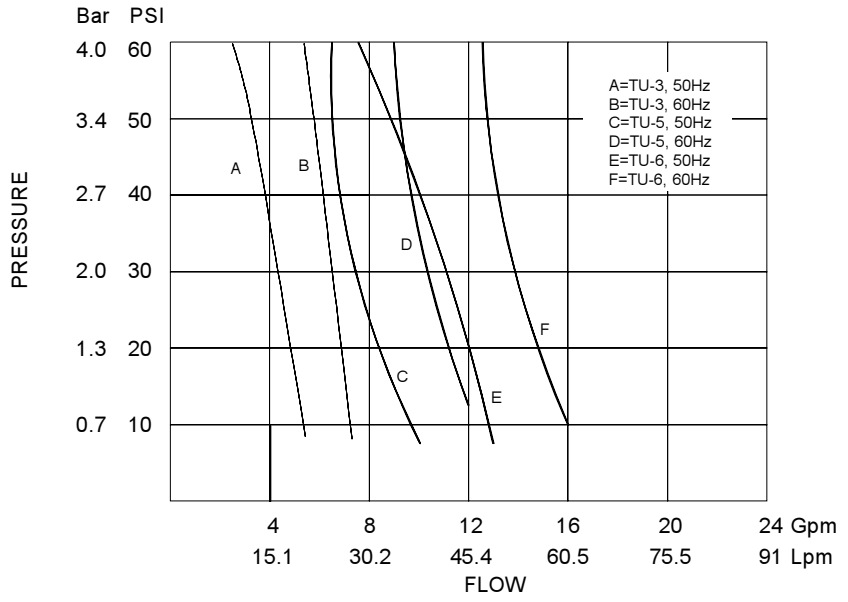

TU-7, 8 & 9

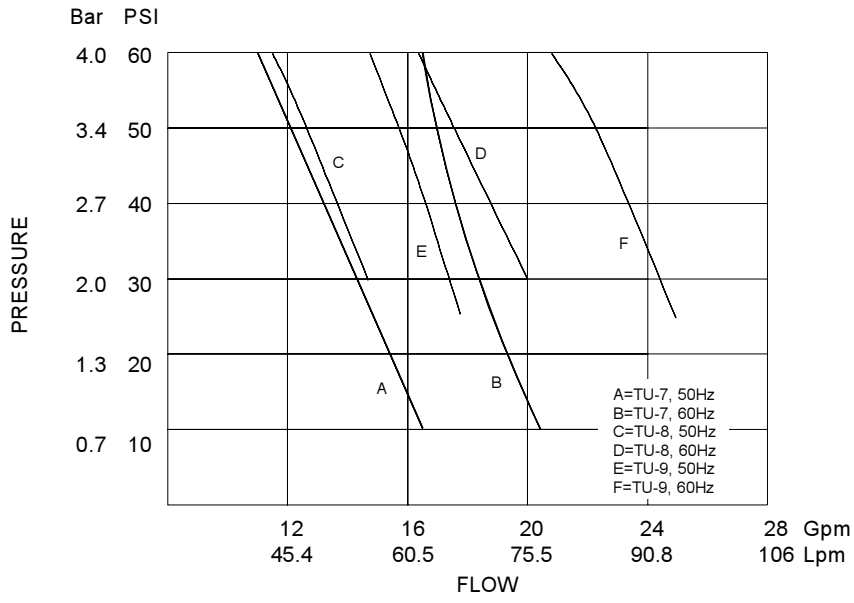

Section III Installation

Site (Air-cooled Units)

The unit should be located in a laboratory or clean industrial environment where ambient temperatures are inside the range of +55°F to +95°F (+13°C to +35°C).

The unit will retain its full rated capacity in ambient temperatures to approximately +75°F (+24°C). Reduce the cooling capacity 1% or every 1°F above +75°F, to a maximum ambient temperature of +95°F. In °C, reduce the cooling capacity 1% for every 0.5°C above +24°C, to a maximum ambient temperature of +35°C.



Never place the unit in a location where excessive heat, moisture, or corrosive materials are present.

The unit has an air-cooled refrigeration system. It must be positioned so the air intake and discharge are not impeded.

On models HX-75 and HX-150, air is drawn through the left side of the unit and discharged through the right and rear. A minimum clearance of 2 feet (0.6 meter) on these three sides is necessary for adequate ventilation.

On models HX-300 through HX-750, air is drawn through the front of the unit and discharged through the side and rear panels. A minimum of 5 feet (1.5 meters) on all four sides of the unit is necessary for ventilation.

On models with a three-phase condenser fan motor, it is possible to connect the main power and have the motor turn in the wrong direction resulting in incorrect airflow over the condenser. Proper airflow is achieved by exchanging any two main power connectors so air is drawn into the fan. See page 29.

In some applications where space is at a premium, the minimum ventilation clearance can be compromised. However, consult our Sales Department before positioning the unit in a location with less minimum clearance than listed above. Inadequate ventilation will cause a reduction in cooling capacity and, in extreme cases, compressor failure.



Avoid excessively dusty areas and institute a periodic cleaning schedule (see Section VII, Condenser Cleaning). If the compressor is allowed to overheat the unit's High Pressure Cutout (HPC) will cycle the unit on and off until cleaning is done and proper airflow is restored. This cycling will eventually damage the unit's compressor.

On models HX-150 through HX-750 a stirrer motor is located under the case top. (Models HX-500 and HX-750 have two stirrer motors.) Heat generated by the stirrer motor is discharged through vents in the case top. Do not block the vents. A minimum clearance of 2 inches (5 centimeters) is necessary for adequate ventilation.

NOTE: HX-75s and units with plate heat exchangers do not have stirrer motors.

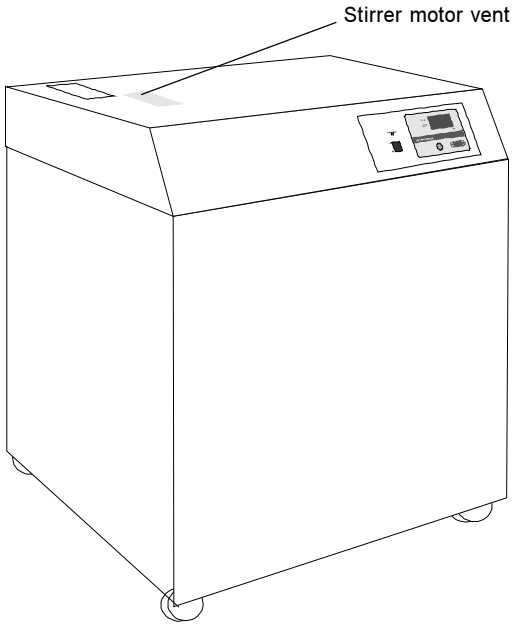

Refer to the table below to determine the approximate amount of air intake required for the unit to retain its full rated capacity. If the air intake does not meet these standards, cooling capacity will be reduced.

	HX-75	HX-150	HX-300
Air Intake			
Cubic feet per minute	600	1050	1900
Liters per minute	17000	29730	53800

	HX-500	HX-750
Air Intake		
Cubic feet per minute	5000	5600
Liters per minute	141750	158800

Site (Water-cooled units)

The unit should be located in a laboratory or clean industrial environment with easy access to a facility cooling water supply and a drain.

All units are equipped with castors for easy movement. This allows the unit to be placed in a small area, as long as there is ample space for the unit to be moved for access on all four sides. A minimum access clearance of 3 feet (1 meter) on two adjacent sides is recommended.

The facility cooling water supply must meet or exceed the requirements listed in the table shown on the next page for the unit to operate at its full rated capacity. If the facility cooling water does not meet these standards, the cooling capacity will be reduced.

As the temperature of the cooling water supply increases, the required flow rate and pressure of the cooling water supply increases.

For example, with a model HX-150, if the temperature of the cooling water supply is +65°F, the flow rate must be at least 1.5 gallons per minute, with a pressure differential of at least 3.5 PSI. However, if the temperature of the cooling water supply is +85°F, the flow rate must be at least 4.0 gallons per minute, with a pressure differential of at least 10 PSI.

If the unit is being used with a building water supply, the back pressure of the drain must be less than the supply pressure.



To prevent damage to the unit's inlet and outlet valves, maximum static facility water pressure should not exceed 150 psig and available supply-to-return differential pressure must not exceed 35 psid across the rated flow range. See next page.

A water-regulating valve, located in the TAP WATER line, regulates the flow rate of the cooling water supply as it enters the unit. The valve regulates the flow rate based on the heat load. Flow through the unit stops automatically when the unit is shut off.

On models HX-150 through HX-750 a stirrer motor is located under the case top. (Models HX-500 and HX-750 have two stirrer motors.) Heat generated by the stirrer motor is discharged through vents in the case top. Do not block the vents. A minimum clearance of 2 inches (5 centimeters) is necessary for adequate ventilation. See illustration on page 13.

NOTE: HX-75s and units with plate heat exchangers do not have stirrer motors.

	Temperature of cooling water supply			
	+55°F (+13°C)	**+65°F (+18°C)**	**+75°F (+24°C)**	**+85°F (+29°C)**
HX-75				
Minimum Flow Rate				
Gallons per minute	0.75*	1.0	1.5	3.0
Liters per minute	2.8*	3.7	5.7	11.4
Minimum Pressure D				
Minimum PSID	1.5*	2.0	3.5	8.0
Minimum Bar	0.10*	0.13	0.24	0.55
HX-150				
Minimum Flow Rate				
Gallons per minute	1.0*	1.5	2.0	3.5
Liters per minute	3.8*	5.7	7.6	13.2
Minimum Pressure D				
Minimum PSID	2.0*	3.5	5.0	10.0
Minimum Bar	0.13*	0.24	0.34	0.69
HX-300				
Minimum Flow Rate				
Gallons per minute	2.5*	4.0	6.5	11.0
Liters per minute	9.5*	15.1	24.6	41.6
Minimum Pressure D				
Minimum PSID	6.0*	8.0	13.5	25.0
Minimum Bar	0.41*	0.55	0.93	1.72
HX-500				
Minimum Flow Rate				
Gallons per minute	3.5	5.0	8.0	16.0
Liters per minute	13.2	18.9	30.3	60.6
Minimum Pressure D				
Minimum PSID	13.0	17.0	23.0	57.0**
Minimum Bar	0.89	1.17	1.58	3.93
HX-750				
Minimum Flow Rate				
Gallons per minute	6.0	8.0	12.5	16.6
Liters per minute	22.7	30.3	47.3	62.8
Minimum Pressure D				
Minimum PSID	14.0	20.0	28.5	40.0
Minimum Bar	0.96	1.38	1.96	2.76

*Estimated Value
** Operating at this condition may lead to valve "chatter" under some operating conditions.

Facility Water Maximum Inlet Pressure must not exceed 150 PSIG.

Facility Water Maximum Pressure Differential must not exceed 35 PSID under any condition.

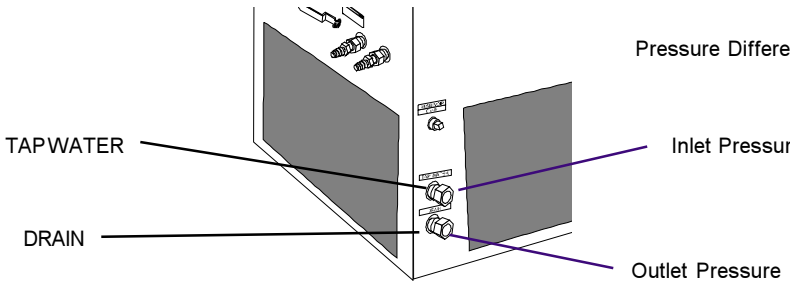

Pressure Differential = Inlet Pressure - Outlet Pressure

Electrical Requirements



The unit construction provides extra protection against the risk of electric shock by grounding appropriate metal parts. The extra protection may not function unless the power cord is connected to a properly grounded outlet. It is your responsibility to assure a proper ground connection is provided.

Refer to the table below to determine the unit's electrical requirements. Verify the requirements by reviewing the ratings listed on the serial number label on the rear of the case top.

	HX-75 & HX-150		HX-300		
Volts	208-230	220-240	208-230	200-220	380-420
Hertz	60	50	60	50	50
Phase	1	1	3	3	3
Plug	NEMA L6-30P or L6-20P		NEMA L15-30P or L16-20P		

	HX-500 & HX-750	
Volts	208-230	380-420
Hertz	60	50
Phase	3	3
Plug	NA	NA

Make sure the voltage of the power source agrees with the unit's voltage and frequency rating. The unit is designed to tolerate deviations of ±10% from the rated line voltage.

Models HX-75 through HX-300 rated 24 Amps or less have an 8 foot (2.4 meter) power cord installed on the unit at the time of shipment.

HX-500s and HX-750s and some units equipped with heaters do not have a power cable. Installation of the cable is your responsibility. See page 29 for additional information.

Plumbing Requirements

Air-cooled and water-cooled units

Before installing the unit to an instrument that previously used tap water as a cooling fluid, flush the instrument several times to remove any rust or scale that has built up. Consult the manufacturer of the instrument for a cleaning fluid recommendation.

The plumbing fittings used to connect the HX to your application are located on the right side of the unit (labelled SUPPLY and RETURN). These connections are ¾ inch NPT, 1 inch NPT for units with CP-75 or TU-9 pumps.

Remove the protective plugs from the SUPPLY and RETURN connections. Connect the SUPPLY fitting to the inlet of your application. Connect the RETURN fitting to the outlet of your application.

The RESERVOIR DRAIN connection, located on the rear of the unit, is a ½ inch FPT fitting connected internally to the unit's fluid reservoir. This fitting is for draining the reservoir. The unit is shipped with a ½ inch MPT plug installed in this fitting. Remove the plug to drain the reservoir.

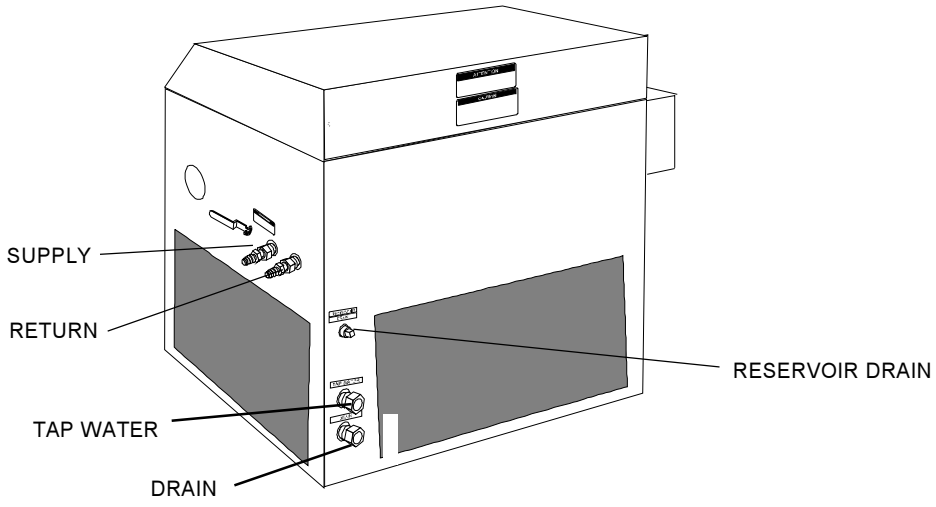

Two plumbing adapters (¾ inch MPT x 5/8 inch hose) are included with the unit. If the unit is being plumbed to the instrument being cooled using flexible tubing, install the adapters in the SUPPLY and RETURN plumbing ports. To prevent leaking, wrap the threads of the adapters with Teflon® sealing tape before installing them in the plumbing ports. The adapters will accept ½ or 5/8 inch ID flexible tubing.

Flexible tubing, if used, should be heavy wall or reinforced construction. All tubing should be rated to withstand 110 psi at the unit's highest possible operating temperature. Make sure all tubing connections are securely

clamped. Avoid running tubing near radiators, hot water pipes, etc. If substantial lengths of tubing are necessary, insulation may be required to prevent loss of cooling capacity.

Tubing and insulation are available from Thermo NESLAB. Contact our Sales Department for more information (see Preface, After-sale Support).

If the unit is "hard plumbed" to the instrument being cooled or to the cooling water supply, damage can occur if the unit is bumped or jolted from its site. Provisions should be made to prevent the unit from being moved after installation. Once the unit is plumbed, secure the locking castors on the unit's base. If the unit is located in a heavy traffic area where the possibility of collision is imminent, it may be necessary to secure the unit to the site using blocks or mounting brackets.

It is important to keep the distance between the unit and your application as short as possible, and to use the largest diameter tubing practical. Tubing should be straight and without bends. If diameter reductions must be made, they should be made at the inlet and outlet of your application, not at the HX.

If substantial lengths of connecting tubing are required, they should be pre-filled with cooling fluid before connecting them to the unit.

Water-cooled units

The plumbing connections used to connect the water-cooled condenser in the HX to the facility cooling water supply are located at the rear of the unit (labelled TAP WATER and DRAIN). On HX-75s through HX-300s, these fittings are ½ inch FPT. On HX-500s and HX-750s, these fittings are 1 inch FPT.

Remove the plastic protective plugs from the TAP WATER and DRAIN connections. Connect the TAP WATER fitting to the facility cooling water supply. Connect the DRAIN fitting to a drain.

Fluids



Never use flammable or corrosive fluids with this unit. Do not use automotive antifreeze. Commercial antifreeze contains silicates that can damage the pump seals. Use of automotive antifreeze will void the manufacturer's warranty.

Thermo NESLAB recommends using distilled/deionized water with a 0.05 to 0.1 megohm-cm reading. See Appendix A for additional informantion.



Highly distilled/deionized water, above the 3 megohm-cm region, may become aggressive and is not recommended for use with units with wetted parts other than stainless steel. Distilled/deionized water in the 15 megohm-cm region is definitely aggressive and should not be used. Units operating in these regions should be closely monitored. See Water Quality Standards and Recommendations in this section.

If you do not have access to distilled/deionized water we recommend using filtered tap water. Thermo NESLAB cannot recommend any custom fluids, these fluids are too dependent on your particular application.



If your unit is equipped with a plate heat exchanger do not use 100% water as a recirculating fluid. Due to the physical nature of a plate heat exchanger, and its response to temperature changes, using 100% water may cause the plate heat exchanger to rupture.

Below +8°C, a non-freezing solution is required. A 50/50 mixture, by volume, of distilled/deionized water and laboratory grade ethylene glycol is suggested. The selected cooling fluid must have a viscosity of 50 centistokes or less.



Ethylene glycol (EG) is hygroscopic, it will absorb water from its environment. This can affect the freezing point and boiling point of the fluid over time. This may result in system failure.



When using EG/water top-off with EG/water. Do not top-off with plain water. Topping-off with plain water can severely effect the freezing point and boiling point of the fluid. This may result in system failure.



Do not use a Deionization (DI) filter with Inhibited EG. A DI filter will remove inhibitors from the solution rendering the fluid ineffective against corrosion protection. Also, inhibitors increase fluid conductivity.

For units with extended temperature ranges above +35°C, we recommend distilled/deionized water up to +80°C. Above +80°C, you are responsible for the fluid(s) used.

Water Quality Standards and Recommendations

	Permissible (PPM)	Desirable (PPM)
Microbiologicals		
(algae, bacteria, fungi)	0	0
Inorganic Chemicals		
Calcium	<40	0.6
Chloride	250	<25
Copper	1.3	1.0
Iron	0.3	<0.1
Lead	0.015	0
Magnesium	<12	0.1
Manganese	0.05	<0.03
Nitrates\Nitrites	10 as N	0
Potassium	<20	0.3
Silicate	25	<1.0
Sodium	<20	0.3
Sulfate	250	<50
Hardness	17	<0.05
Total Dissolved Solids	50	10
Other Parameters		
pH	6.5-8.5	7-8
Resistivity	0.01*	0.05-0.1*

* Megohm-Cm (Compensated to 25°C)

Unfavorably high total ionized solids (TIS) can accelerate the rate of galvanic corrosion. These contaminants can function as electrolytes which increase the potential for galvanic cell corrosion and lead to localized corrosion such as pitting which can be observed at the studs and on the outside surface of cooling coils. Eventually, the pitting will become so extensive that the coil will leak refrigerant into the water reservoir.

As an example, raw water in the United States averages 171 ppm (of NaCl). The recommended level for use in a water system is between 0.5 to 5.0 ppm (of NaCl).

Recommendation: Initially fill the tank with distilled/deionized water. Do not use untreated tap water, as the total ionized solids level may be too high.

Maintain this water quality at a resistivity of between 1 to 10 megohm-cm (compensated to 25°C) by using a purification system. Although the initial fill may be as high as 10 megohm-cm (compensated to 25°C), the desired level for long time usage is 1 to 3 megohm-cm (compensated to 25°C).

These two recommendations will reduce the electrolytic potential of the water and prevent or reduce the galvanic corrosion observed.

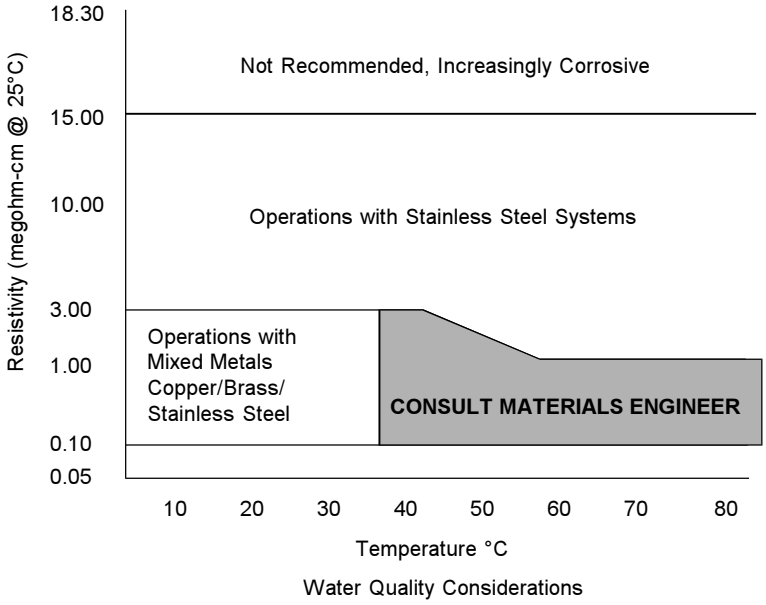

Filling Requirements

The reservoir access panel is located at the left rear corner of the case top. To open the access panel, slide the latch back (towards the rear of the unit) and lift.

The reservoir cover is located below the access panel. Loosen the thumbscrews and remove the reservoir cover. Fill the fluid reservoir with cooling fluid to within 1 inch of the top.

The fluid capacity of the instrument being cooled and the recirculation lines may be significant. To prevent the lowering of the fluid level in the reservoir below the operating level, have extra cooling fluid on hand to keep the reservoir filled to within 1 inch of the top.

When the recirculating system is full, replace the reservoir cover and the access panel.

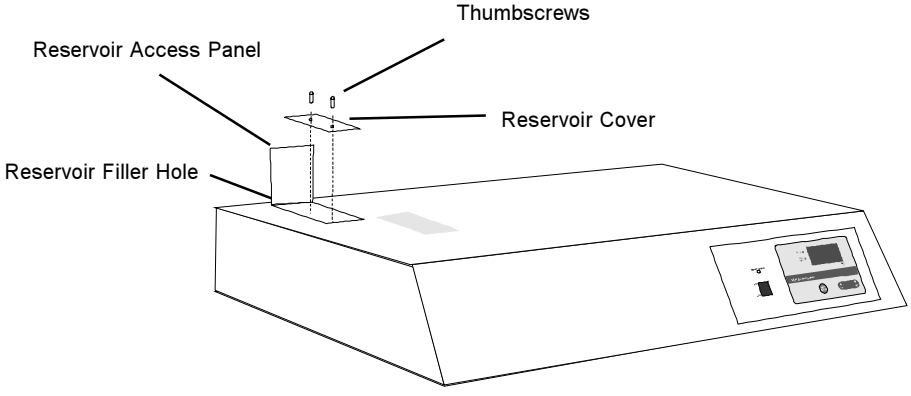

Section IV Operation

Start Up/Shut Down

Before starting, check all electrical and plumbing connections and make sure the recirculating system (the HX, your application, and the recirculation lines) has been properly filled with cooling fluid. Also, make sure the flow control valve is properly set (see Flow Control in this section). For CE Mark units ensure the circuit breaker on the right hand side of the unit is on.

For water-cooled units — ensure that the facility water is turned on.

HX-300s through HX-750s are equipped with a compressor crankcase heater. The crankcase heater warms the oil in the compressor and prevents refrigerant from mixing with the oil. Before start up, the unit must be connected to its power source for at least 12 hours. This allows time for the oil to be heated and separate from the refrigerant.

To start the unit, place the ON/OFF switch in the ON position. The pump and refrigeration system will start. The °C display will indicate the reservoir fluid temperature. After starting recheck the fluid level, a "top off" may be needed.

NOTE: For optional remote start capability see Interlock Package on page 27.

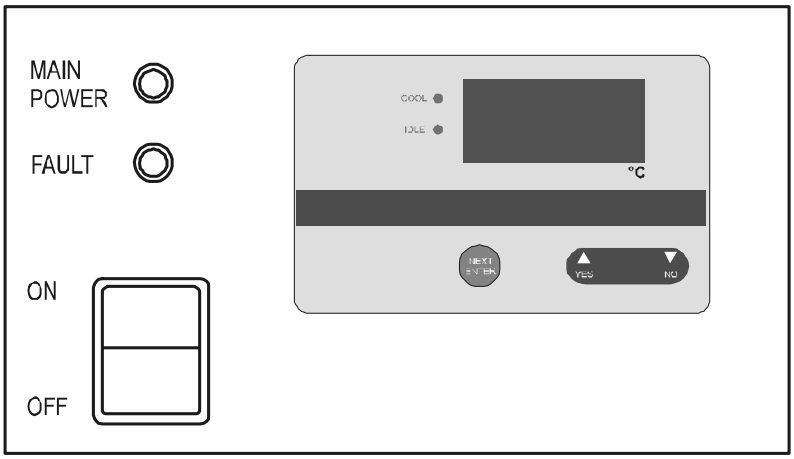

The COOL and IDLE LEDs indicate the status of the refrigeration system. COOL illuminates to indicate the refrigeration system is removing heat from the cooling fluid. As the operating temperature approaches the temperature setpoint, the COOL LED will extinguish.

IDLE illuminates to indicate the refrigeration system is not removing heat from the cooling fluid because the tempetature has dropped below the setpoint. For units equipped with an optional heater package the LED also indicates the heater is on. When the reservoir temperature approaches the setpoint the LED will flash. When the temperature reaches the setpoint the LED will extinguish.

To shut the unit off, place the ON/OFF switch in the OFF position.

When the unit is shut off, wait approximately five minutes before restarting. This allows time for the refrigeration pressures to equalize. If the pressures are not allowed to equalize, the compressor will short-cycle (clicking sound) and no cooling will occur.

Digital Controller

The digital controller controls temperature using a PID (Proportional-Integral-Derivative) algorithm. It is designed with self-diagnostic features and easy to use operator interface.

NEXT ENTER 

Use this key to accept and save changes.

YES, ▲
This key is used to increase numerical values.

NO, ▼
This key is used to decrease numerical values.

Setpoint

When the controller is powered it displays the reservoir fluid temperature. Press the **NEXT ENTER** key to view the setpoint. The display flashes between **SP** and the actual setpoint number. If desired, use the **YES** and **NO** keys to change the setpoint. The display flashes as soon as either key is depressed. Once the desired setpoint is displayed, press **NEXT ENTER**.

NOTE: The new value will not be used by the controller until **NEXT ENTER** is depressed and the display stops flashing. The controller will not allow you to enter a value above the maximum or below the minimum value, or any illegal value. If you try to enter an illegal value the display will revert to its original value when the last digit was entered.

If **NEXT ENTER** is not depressed within one minute, the controller will time out and the new value will not be accepted. The controller will revert to the previous value.

NOTE: Error codes are addressed in Section VIII, Service.

Setup Loop

The controller is used to view the unit's configuration, and to set temperature limits and PID parameters. Thermo NESLAB recommends that only a qualified technician change the PID values. Values can be changed using the YES and NO keys. Press the NEXT key twice to accept the new value.

The highlighted displays are optional. IndC/FLT only shows on unit's having an interface package (see page 27). Select IndC to configure the unit to keep running in the event of a fault, select FLt to configure the unit to shut down. The HEAt display only shows on units having a heating package (see page 28).

NOTE: Units without the interlock package are configured to keep running.

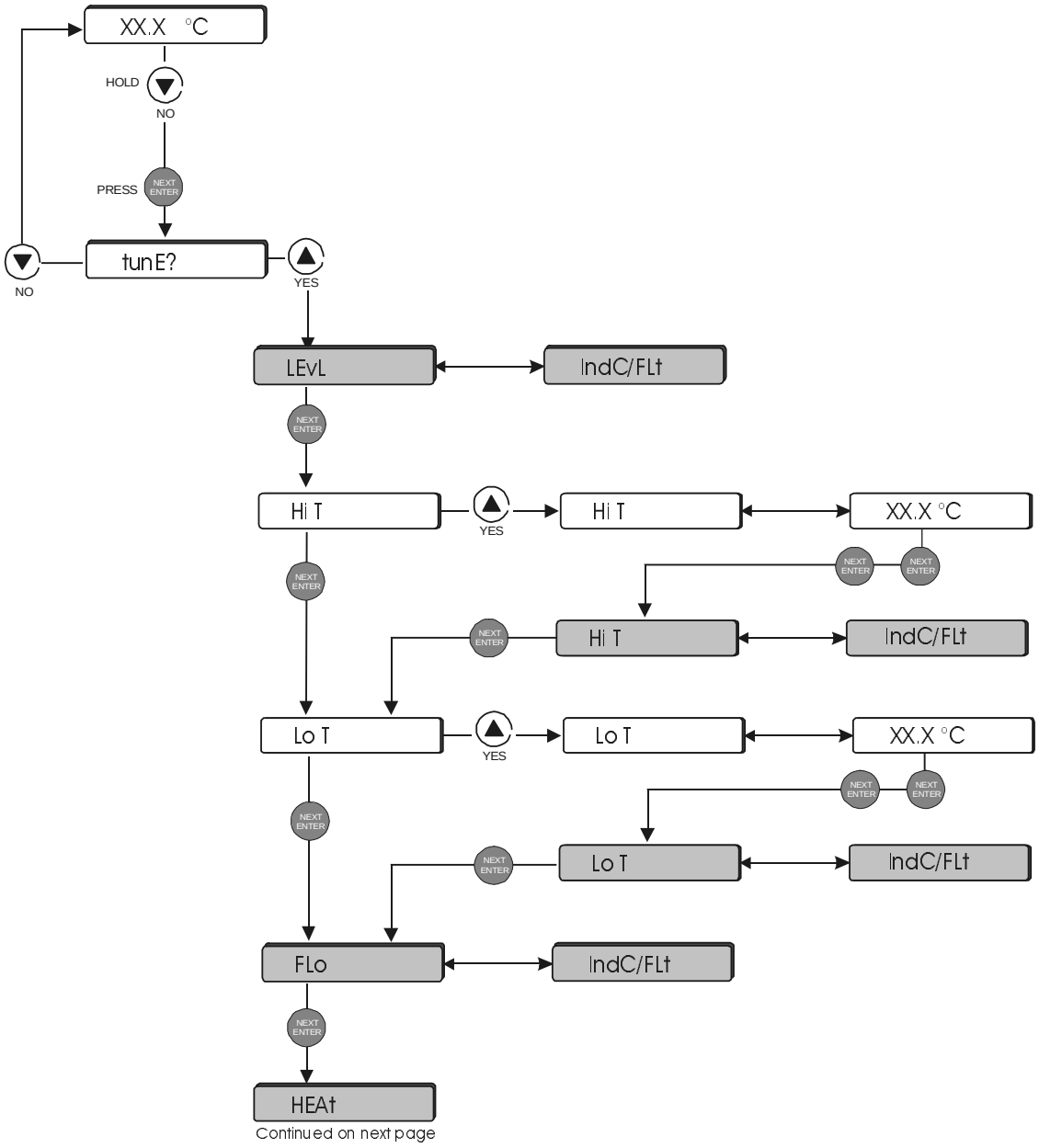

Setup Loop (1 of 2)

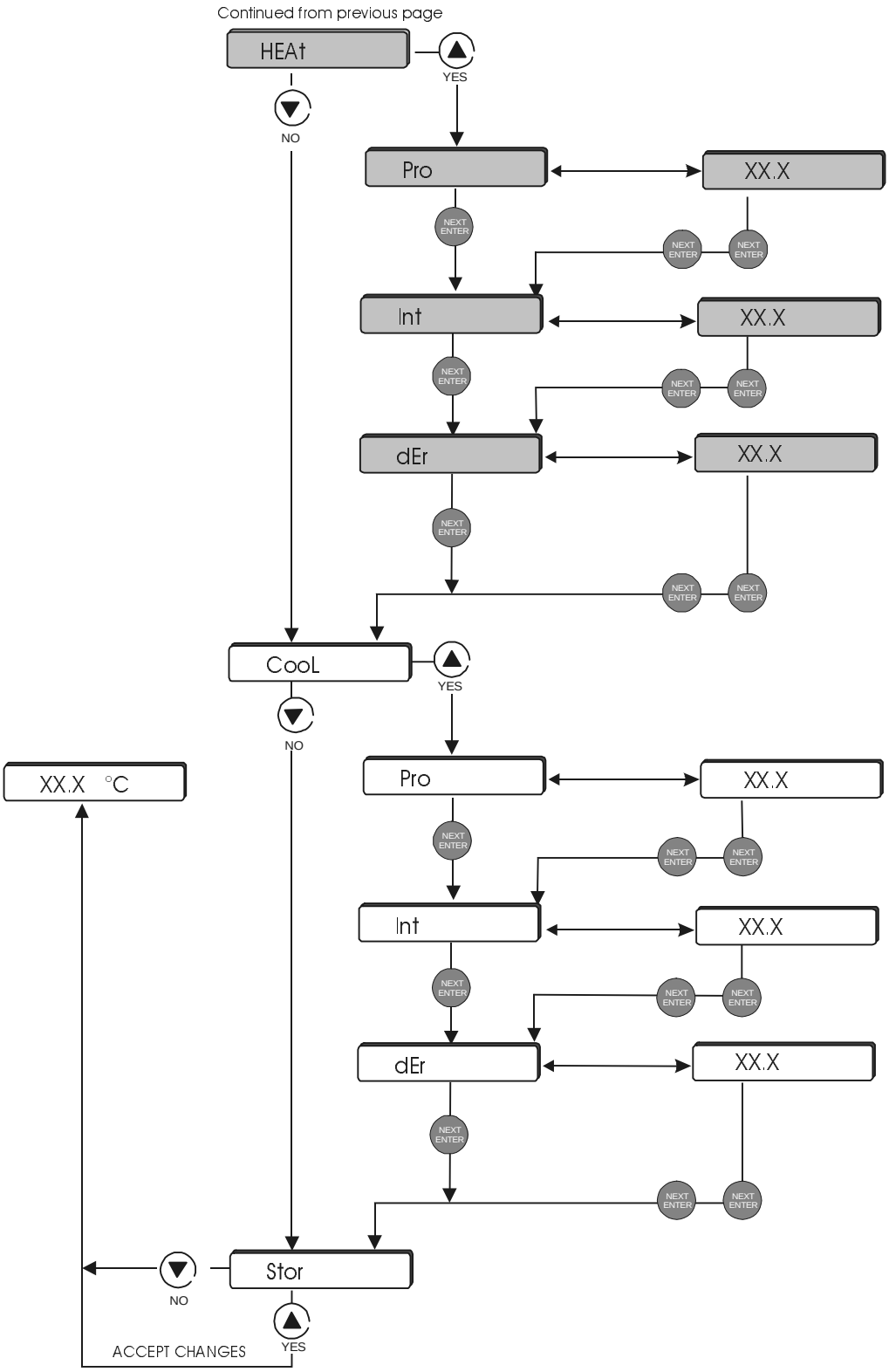

Setup Loop (2 of 2)

NOTE: Should you desire to return to the temperature display and abort *all* changes, keep pressing NEXT until the display reads **Stor**. Press **NO.**

Flow Control

The RECIRCULATING FLOW CONTROL handle, located on the right-hand side of your unit, is connected to a valve that controls the flow rate of the cooling fluid to the instrument being cooled.

When the handle is in the full vertical "**+**" position, the valve is open and all possible cooling fluid is supplied to the instrument being cooled. When the handle is in the full horizontal "**-**" position, the valve is closed and no cooling fluid is supplied to the instrument being cooled. When the handle is between these two positions, the flow rate of the cooling fluid is between full flow and no flow. Use a flow meter on the SUPPLY line to adjust the desired flow rate.

The handle is normally closed for start up. Once the unit is running slowly open the valve for the desired flow rate. If the unit is equipped with an optional flow sensor, the flow control valve must be opened slightly on start up to allow fluid to circulate through the flow rate sensor. For small pumps, a flow rate of more than 0.3 gpm (1.0 lpm) is necessary. For large pumps, a 1.0 gpm (3.8 lpm) is needed.



Never rapidly move the valve wide open from the closed or slightly open position.

Pressure Gauge

The RECIRCULATING PRESSURE gauge is located next to the flow control handle. The gauge indicates the operating pressure of the system.

Section VI Optional Features

Interlock Package

Two interlock packages are available: SentryOne and SentryTwo. SentryOne allows you to set the high and low temperature limits, and low fluid level, as faults. SentryTwo is the same but adds a low flow switch to detect low flow conditions. Both packages have a female 15-pin interface connector located on the rear of the unit. The connector is also a status relay contact and a remote on/off control.

A status relay energizes when the unit is powered. When an error occurs this relay de-energizes. If the unit is IndC configured, press any controller key to clear the error message. If the unit is FLt configured, cycle the MAIN POWER ON OFF switch to clear the error message. See Setup Loop on page 24.

To use the remote start, place the ON/OFF LOCAL REMOTE switch to the REMOTE position, place the MAIN POWER ON OFF switch to ON, and then apply a 24VAC ±10% signal to the interface. The unit will stop when the MAIN POWER switch is turned OFF or when the signal is removed.

The pin out information is:

Pin 1	Chassis ground
Pin 9	Status relay contact open on error
Pin 10	Status relay contact closed on error
Pin 11	Status relay common
Pin 13	On/off relay coil
Pin 14	On/off relay coil

The status relay is rated 3 amps at 250 Volts and <=0.8 Ohms contact resistance. The on/off relay coil is rated 24VAC ± 10%.

Automatic Refill Device

The automatic refill device is designed to maintain the correct level of cooling fluid in the reservoir. The device consists of a solenoid valve and a reservoir float switch. If the cooling fluid level falls, the float switch drops, opening the solenoid valve and allows makeup fluid to fill the reservoir. The controller will display Add. Once the cooling fluid level reaches the proper level, the float switch rises and the solenoid valve closes. The controller will display the reservoir fluid temperature.

The plumbing connection for the refill device is located at the right rear corner of the unit and is labelled AUTO REFILL. This connection is a $^{3}/_{8}$ inch OD stainless steel barbed fitting.

Connect this fitting to a makeup fluid source using $^{5}/_{16}$ or $^{3}/_{8}$ inch ID flexible tubing. Make sure all tubing connections are securely clamped.

Tubing is available from Thermo NESLAB. Contact our Sales Department for more information (see Preface, After-sale Support).

Heater Package

The heater package option consists of an immersion heater in the unit's fluid reservoir, a high temperature limit device, a low-level switch, and a solid state zero-crossing relay. A HTC FAULT message on the controller will light if the high temperature limit device is tripped. The low-level switch will disconnect power to the heater if the heater surface is exposed to air.

The heater surface temperature may operate several degrees higher than the reservoir fluid. The limit device is factory set to a temperature above the upper limit of the temperature controller's range.

For personal safety and equipment reliability, only a qualified technician should perform the following procedure. Contact our Service Department for assistance (see Preface, After-sale Support).

To reset a tripped temperature limit device, lift and open the case top. The case top is secured to the unit base by a hinge between the case top and the base (along the rear of the unit), and by two spring clips located at the front corners, see illustration on page 7. To gain access to the temperature limit device, disengage the spring clips with a flat bladed screw driver and lift the front of the case top and tilt it back. A support brace, located on the right side of the inner case, will stop and support the case top.

You must identify and correct the fault before restarting the unit. The protection device and the heater power connections are located on top of the fluid reservoir. The protection device has a small, black reset button. Press the reset button to restore heater operation and clear the HTC fault. Cycle the MASTER POWER ON OFF switch to clear the flashing HTC FAULT indication.

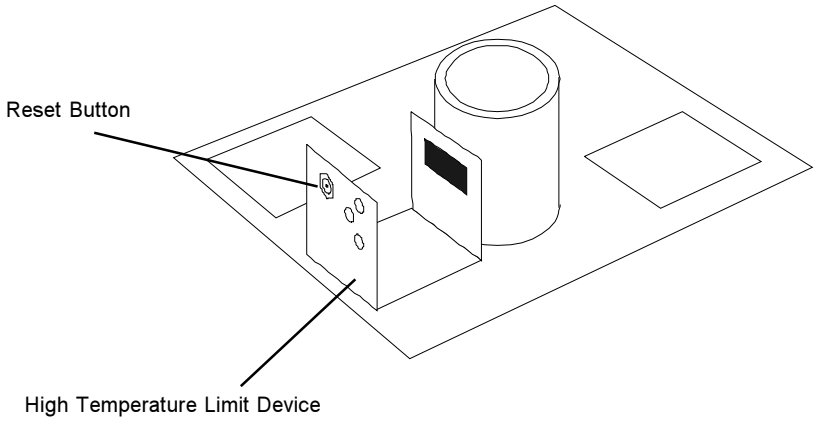

Some units equipped with heaters do not have a power cable. Installation of the cable is your responsibility. Wire the unit in conformance to local, state and federal electrical codes. Double check all wiring to make sure it is properly connected and protected from the elements.

The unit construction provides extra protection against the risk of electric shock by grounding appropriate metal parts. The extra protection may not function unless the power cord is connected to a properly grounded outlet. It is your responsibility to assure a proper ground connection is provided. For personal safety and equipment reliability, only a qualified technician should perform the following procedure.

To access the connections open the pullbox.

- Insert your cable through the conduit.
- Locate 3TB and 4TB and connect your cable.
- Close the pullbox.

Note: Pullbox shown with heater and remote condenser options.

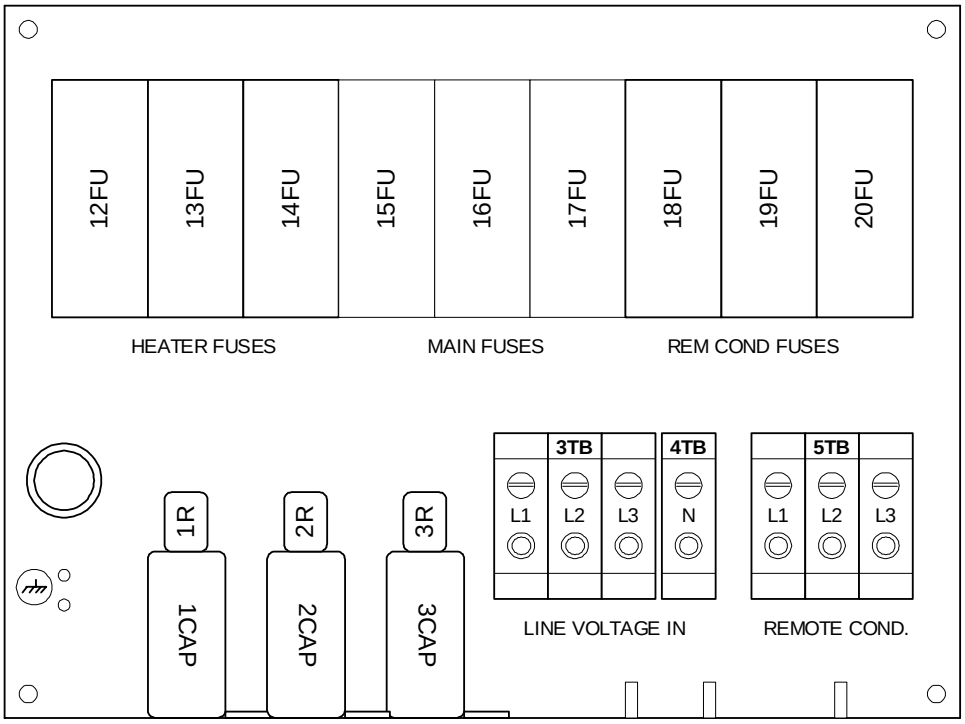

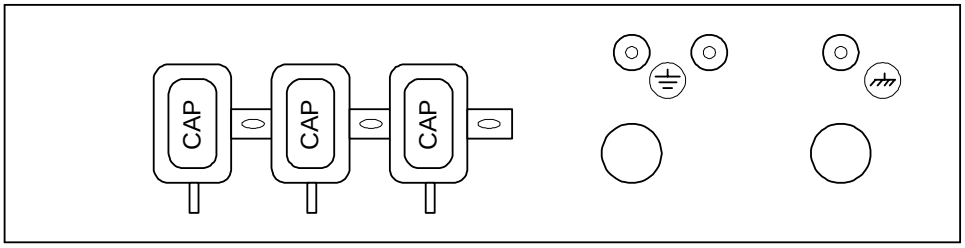

External Pressure Regulator

For applications requiring a maximum pressure less than 55 psi, an External Pressure Reducer (EPR) is available. An EPR allows an adjustable operating pressure of 10 to 50 psi. If the pressure of the fluid leaving the unit exceeds the valve setting the relief valve will bypass the fluid back into the unit to relieve the pressure. The back pressure of the connected equipment and the flow rate of the recirculating fluid to your application determine the pressure of the system.

Connect the EPR assembly as shown below. Tighten the hose clamps tight enough to prevent leakage. Do not overtighten or the clamps will “bite” into the flexible tubing and can cause excessive wear.

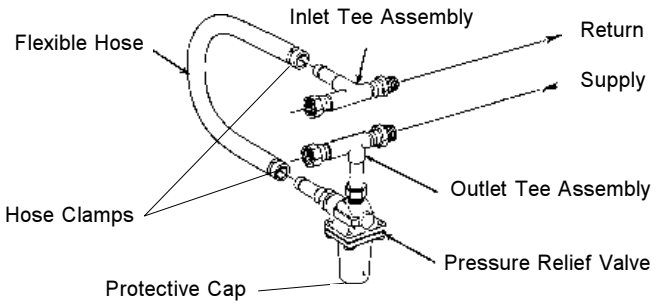

Connect the outlet tee assembly to the inlet of your application. Connect the inlet tee assembly to the outlet of your application.

Adjustment

When adjusting the relief valve some leaking may occur, place a container under the valve during adjustment.

Remove the protective cap and locate a threaded fitting with a slot for a large screwdriver. Hold the threaded fitting in place and loosen the lock nut on the valve body until it is almost flush with the threaded fitting. Unscrew the threaded fitting three to four turns. (If the threaded fitting unscrews completely from the valve housing, screw it back in two to three turns.)

To simulate blockage, close (or pinch off) the hose between the EPR outlet tee assembly and your application. Monitor the operating pressure of the HX unit. Turn the threaded fitting until the desired relief pressure is set (the EPR valve cannot be set lower than the total back pressure of your instrument, or flow will not be received).

Tighten the locknut to secure the position of the threaded fitting. Open the hose between the EPR outlet tee assembly and your application.

Nitrogen Purge

Units equipped with nitrogen purge valves are designed to accept a constant flow of dry nitrogen into the reservoir. The nitrogen blankets the cooling fluid reducing fluid evaporation.

Remove the reservoir cover by removing the screws. Fill the reservoir with fluid. Replace the reservoir cover and screws. Connect the nitrogen line to the valve on the reservoir cover.

A pressure regulator, set to 0.5 psig (0.35 kg/cm^3) or lower, should be used to prevent fluid overflow.

Particulate Filters

Particulate filter assemblies attach to the supply side of the recirculation water. Refer to the separate manual attached to the filter assembly.

The frequency for cleaning/changing the filter depends on your usage. Should the unit's performance be degraded, check the filter.

Filters are available from Thermo NESLAB, contact our Customer Service Center. Before calling refer to the serial number label on the rear of the unit to obtain the following information:

-BOM number
-Serial number

Section VII Maintenance

Service Contracts

Thermo NESLAB offers on-site Service Contracts designed to provide extended life and minimal downtime for your unit. For more information, contact our Service Department (see Preface, After-sale Support).

Condenser Cleaning (Air-cooled units only)

For proper operation, the unit needs to pull substantial amounts of air through a finned condenser. A build up of dust or debris on the fins of the condenser will lead to a loss of cooling capacity.



Eventually the compressor will overheat and the High-Pressure Cutout (HPC) will activate and temporarily shut down the unit. The HPC will cycle the unit on and off until the condenser is cleaned. After a period of time, this cycling will damage the unit's compressor.

The frequency of cleaning depends on the operating environment. We recommend making a monthly visual inspection of the condenser after initial installation. After several months, the frequency of cleaning will be established.

For "standard" air-cooled units, periodic vacuuming of the fins on the condenser is necessary. For units with the optional remote air-cooled condenser, remove any debris from around the condenser site. If a visible accumulation of dust or dirt is found on the condenser fins, the condenser should be cleaned with a condenser cleaning solvent and rinsed with water.



Exercise caution not to damage the condenser fins or coil. Condenser fin or coil damage can result in a loss of performance and, in extreme cases, refrigeration system failure.

Hoses

The unit's internal and external hoses and clamps should be inspected and tightened on at least a semiannual basis.

Algae

To restrict the growth of algae in the fluid reservoir, we recommend the reservoir cover be kept in place and that all recirculation lines be opaque. This will eliminate the entrance of light, which is required for the growth of most common algae.

Thermo NESLAB recommends the use of Chloramine-T, 1 gram per 3.5 liters. Other algicides can be harmful to the unit's internal components. Contact Thermo NESLAB for additional information.

Section VIII Service

For personal safety and equipment reliability, only a qualified technician should perform the following procedure. Contact our Service Department for assistance (see Preface, After-sale Support).

Configuration

Case Top

The unit has a hinged case top to allow service access. The case top is secured to the top of the unit base by a hinge between the case top and base (along the rear of the unit), and by two spring clips located at the front corners, see illustration on page 7. To gain access to the pump assembly or the reservoir area, disengage the spring clips with a flat bladed screw driver and lift the front of the top cover and tilt it back. A support brace, located on the right side of the inner base, will stop and support the case top. Ensure the spring clips engage when the top is lowered back into position.

Reservoir Cover

Access to the inside of the fluid reservoir is necessary to clean the reservoir. The figure below illustrates a typical layout of the components mounted on top of the reservoir cover. The component layout varies depending on the unit size. If you are unable to identify the components on your unit's reservoir cover, contact our Customer Service Department for assistance (see Preface, After-sale Support).

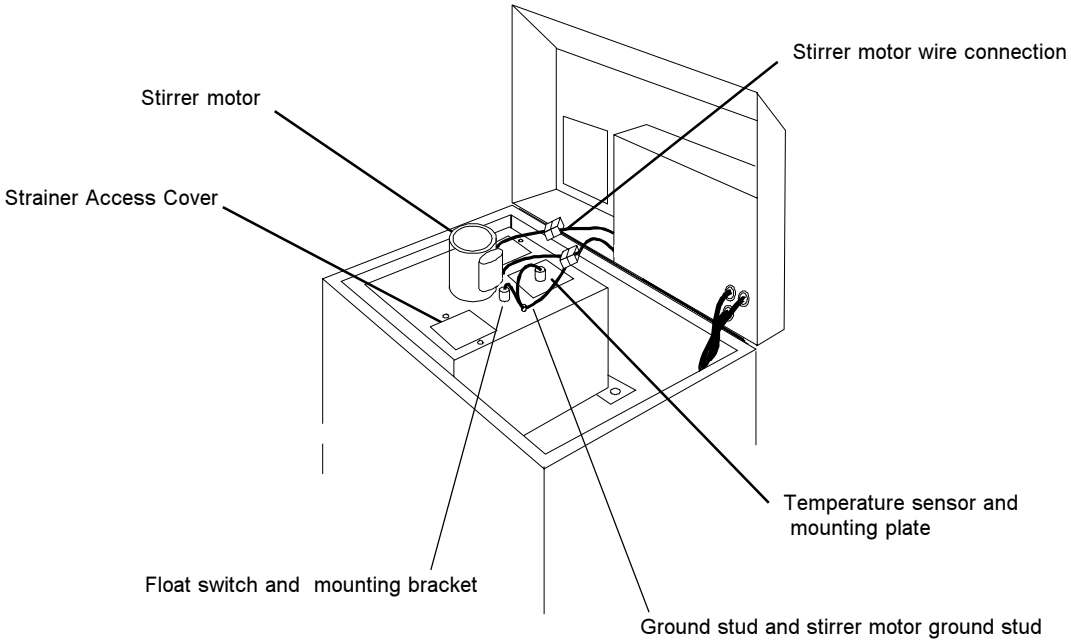

Disconnect the unit from its power source before removing the reservoir cover.

Locate the reservoir stirrer motor (units with plate heat exchangers and HX-75s do not have a stirrer motor; HX-500s and HX-750s have two stirrer motors). Disconnect the motor wires at the plug located on the side of the electrical box cover. Also disconnect the green ground wire that connects the ground stud on the reservoir cover to the unit's grounding bar.

Locate the float switch mounting bracket. Remove the two stainless steel screws that secure the bracket to the reservoir cover. Carefully remove the mounting bracket and place the assembly in an area adjacent to the reservoir. Make sure not to strain the connecting wires.

Locate the temperature sensor mounting plate. Remove the two stainless screws that secure the bracket to the reservoir. Carefully remove the sensor mounting plate with the sensor(s) attached and place the assembly in a protected area adjacent to the reservoir. Make sure not to damage the sensor(s) or strain the connecting wires.

Remove the stainless steel screws that secure the reservoir cover to the reservoir. Remove the cover and place it to one side in a manner that protects the stirrer motor blades from being bent.

Service Access Panels
Service access panels on your unit allow easy access to the pump and refrigeration assemblies. Panel location varies with the size and type of unit. The panels are designed to allow removal without disconnecting the HX from the instrument being cooled.



Disconnect the unit from its power source before removing any of the access panels.

Reservoir Cleaning

Periodic reservoir cleaning is necessary. We recommend making a monthly visual inspection of the reservoir after initial installation. After several months, the frequency of cleaning will be established.



Disconnect the unit from its power source and drain the reservoir before cleaning the reservoir.

Lift the top cover to access the reservoir. Remove the reservoir cover as described in Configuration. Clean the reservoir with a cleaning fluid compatible with the recirculating system and the cooling fluid.



Do not use steel wool or other abrasive materials. They can scratch the stainless steel surface and initiate rusting.

When the reservoir is clean, reassemble the cover assembly and close the case top. Refer to Section III, Filling Requirements for instructions on replacing the cooling fluid.

Pump Strainer

Units with PD and TU pumps have pump strainers that require cleaning. If debris is drawn into the recirculating system, the pump strainer will prevent the material from being drawn into the pump and damaging the pump vanes.

After initial installation, the strainer may become clogged with debris and scale. Clean the strainer after the first week of installation. After this first cleaning, a monthly visual inspection is recommended. After several months, the frequency of cleaning will be established.

Disconnect the power cord from the power source and drain the fluid reservoir before cleaning the strainer. Do not operate the unit with any strainer removed.

The wire mesh pump strainer is located in the reservoir on the pump suction line. Remove the strainer access panel located on top of the reservoir cover to access the strainer, see illustration on page 33.

Cover the strainer with a plastic bag to help catch any debris that may become dislodged during removal.

Unscrew the strainer and rinse it with water. Replace the strainer. Refer to Section III, Filling Requirements for instructions on replacing the cooling fluid.

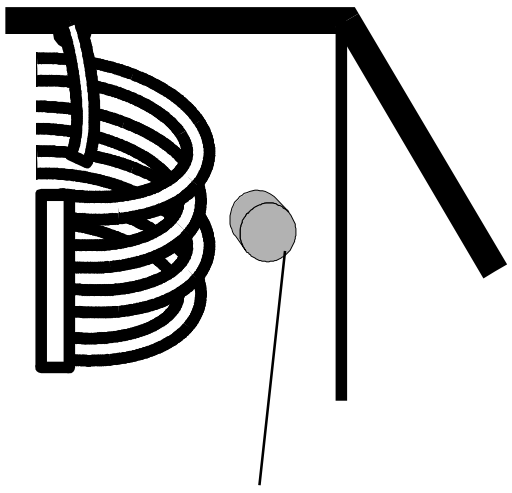

Pump Strainer

Error Codes

The controller also has the capability to display error codes. The codes are:

Display	Indication
Er00	ROM Checksum
Er01	RAM Test Fail
Er02	Keypad Test Failed
Er03	EEPROM Critical Parameters Checksum
Er04	EEPROM Noncritical Parameters Checksum
Er05 -13	Interrupt Error
Er14	Synchronous Error
Er15	Asynchronous Error
Er16	Bad Calibration Data
Er19/Lot	Low Temperature Alarm - Latching Error
Er20/Add	Level Warning (Optional) Self Clearing
Er21/Hit	High Temperature Alarm - Latching Error
Er22	High Temperature Limit (Fixed) - Latching Error
Er23	Shorted RTD2 (Optional/If Enabled) - Latching Error
Er24	Open RTD2 (Optional/If Enabled) - Latching Error
Er25	Shorted RTD1 - Latching Error
Er26	Open RTD1 - Latching Error
Er27/LoFL	Low Flow (Optional) - Latching Error
Er31/LLF	Low Level Fault
Er33	Low Temperature Limit (Fixed) - Latching Error
Er34/Htc	High temperature Cutout (Optional) - Self Clearing
Er50	Auxiliary Error (Optional) - Self Clearing
Er51/PrES	Pressure Cutout (Optional) - Self Clearing
Er52	System Error - Self Clearing

Self clearing errors clear after the error condition is corrected. Latching errors clear after the error is corrected and any key on the controller is pressed.

On units with the optional interlock package, if the unit is IndC configured, press any controller key to clear the error message. If the unit is FLt configured, cycle the MAIN POWER ON OFF switch to clear the error message.

The unit is supplied with two reservoir level switches. The first switch illuminates the Add display and activates the optional auto refill device. The second level switch is a safety interlock. It illuminates the LLF display and shuts down the optional heater package.

The unit may be supplied with an optional flow sensor. The error setpoint may be preset or adjustable.

Pump Motor Lubrication

Some units with PD pumps require pump motor lubrication. Refer to the pump identification label on the rear of the case top to identify the specific pump in your unit.

Several companies manufacture motors used to drive the pump. These motors use sleeve type bearings with large oil reservoirs. Oiling instructions are generally posted on each motor. In the absence of instructions, add approximately 30 to 35 drops of SAE 20 non-detergent oil in each fill hole on the following schedule (SAE 20 = 142 CS viscosity):

Duty Cycle	Oiling Frequency
Continuous	Once every year
Intermittent	Once every 2 years
Occasional	Once every 5 years

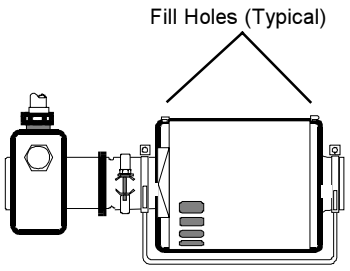

Phase Rotation

Three-phase units with three-phase pump motors are equipped with a phase rotation interlock. Refer to the serial number label on the rear of the case top for the specific electrical requirements of your unit. The interlock, located behind the access panel under the bonnet, prevents the unit from starting if the phase rotation is wrong and causes an Er52 display on the controller. If the unit will not start, see Section IX, Checklist. If the options in the checklist are not applicable, the problem may be phase rotation.

If phase rotation is the problem, disconnect the unit from its power source, remove the pullbox cover. Reverse any two line conductors on the line side of the relay. See page 29.

Never remove the green ground wire.

Replace the pullbox cover. Reconnect the unit to its power source. If the unit will not start, contact our Customer Service Department.

High/Low Pressure Cutouts

All units, except air-cooled HX-75s, have a high pressure cutout. Should the unit's refrigeration discharge pressure become too high the high pressure cutout will activate and shut down the compressor and the controller will display Er52. High pressures can be caused by a lack of cooling water to the compressor or debris in the refrigeration lines.

Should the unit's refrigeration discharge pressure become too low the low pressure cutout will activate and shut down the compressor and the controller will display Er52. Low pressures can be caused by a leak in the refrigeration lines.

Once the cause of the problem has been identified and corrected you must manually reset the cutout. The cutout location depends on the size of your unit. On the HX-75, it is behind the right side panel, on the HX-150 it is behind the left side panel, and on the HX-300 through HX-750 it is behind the rear panel.

Locate the white reset switch on the high pressure cutout. Press in on the switch until a "click" is heard. If the reset does not "click" the cutout was not activated and the unit shut down occurred for another reason.

Pump Motor Overload Protector

Refer to the serial number label for the specific electrical requirements of your unit; specifically, identify the phase requirements of your unit.

The pump motor overload protector prevents the pump motor from exposure to excessive current. If an overload fault occurs, due, for example, to excessive pressure or flow, or excessive ambient temperature, the overload protector will shut off the unit and the controller will display Er52 until the overload is reset.

The protector is located behind the access panel under the bonnet.

Pressure Relief Valve
(PD and TU Pumps Only)

Units with a PD or TU pump have an adjustable pressure relief valve. Refer to the pump identification label on the rear of the case top to identify the specific pump in your unit.

The pressure relief valve establishes the maximum operating pressure of the unit. If the pressure of the fluid leaving the pump exceeds the valve setting, the relief valve will bypass the fluid within the unit to relieve the pressure. The valve does not determine the actual operating pressure; the back pressure of the connected equipment and the setting of the flow control valve determine the operating pressure of the system. If adjustment seems necessary, consult our Service Department for assistance.

Before calling, refer to the serial number label on the rear of the case top to obtain the following:

- BOM number
- Serial number

Suction Discharge Pressure Speed Check (R-22)

Air-Cooled Standard and High Temperature Units (All Pump Types)[1]

Unit	Suction (psi)	Discharge (psi)	Speed Check (°C/Minute)
HX-75	77 - 84	225 - 250	1.5 - 1.7
HX-150	70 - 73	240 - 270	2.0 - 2.5
HX-300	84 - 105	270 - 305	2.4 - 2.7
HX-500	80 - 90	215 - 235	2.0 - 2.4
HX-750	65 - 75	185 - 215	

Water-Cooled Standard and High Temperature Units (All Pump Types)[2]

Unit	Suction(psi)	Discharge(psi)
HX-75	72	170
HX-150	65	175
HX-300	73 - 78	180
HX-500	75 - 82	150
HX-750	50 - 60	180

1. 27°C unit temperature, water in reservoir, access panel removed.
2. 25°C unit temperature, water in reservoir.

NOTE: Refrigerant R-22. For low-temperature units please call Thermo NESLAB.

Section IX Troubleshooting

Displaying Software Version

To display the software version ensure the controller is displaying the reservoir fluid temperature. Depress and hold NO for at least 10 seconds. For example, 0507 displays software version digits to **left** of decimal. Note, the two leading zeros do not display. Press NEXT ENTER. 48 displays software version digits to **right** of decimal. Press NEXT ENTER. 1 displays software version revision letter (as its equivalent number - display cannot show letters. A=1, B=2, etc.) Press NEXT ENTER 0000 displays checksum - this can be disregarded. Press NEXT ENTER to return to reservoir fluid temperature.

Checklist

Unit will not start or cycles on and off

HX-300s through HX-750s are equipped with a compressor crankcase heater. The crankcase heater warms the oil in the compressor and prevents refrigerant from mixing with the oil. Before start up, the unit must be connected to its power source for at least 12 hours. This allows time for the oil to be heated and separate from the refrigerant.

For CE Mark units, check the circuit breaker setting on the bonnet.

For units equipped with an optional EMO button, check its position.

For units equipped with an optional REMOTE LOCAL switch, check its position.

Check for a error message. Depress the NEXT ENTER button.

On air-cooled units, ensure the condenser fins are clean and that proper airflow is not restricted.

On water-cooled units, ensure the facility water is on and make sure the cooling water supply is connected to the TAP WATER connection, not the DRAIN connection. Check the High Pressure Cutout, it may need to be reset (see Section VIII, High/Low Pressure Cutouts).

Check power source for correct voltage output. Refer to the serial number label on the rear of the unit for the specific electrical requirements of your unit. Power source must be specified voltage, ±10%.
Check house circuit breaker.

On three phase units with three phase pump motors, the phase rotation may be reversed (see Section VIII, Phase Rotation).

Unit will not circulate fluid
Check the tubing, strainer, and any optional filters/cartridges between the unit and your application for obstructions or for cleaning/replacement.

Units with PD and TU type pumps may require pump strainer cleaning. Refer to the pump identification label on the rear of the case top to identify the specific pump in your unit. For instructions on cleaning the pump strainer (see Section VIII, Pump Strainer).

On units with CP type pumps, if the back pressure of the instrument being cooled is greater than the maximum pressure of the pump, adequate flow may not be obtained. Check for obstructions in the tubing.

Inadequate temperature control
Check/adjust the setpoint.

Make sure the installation of the unit is in compliance with the conditions described in Section III.

Make sure the heat load of the instrument being cooled is not greater than the cooling capacity of the unit.

When the unit is shut off, wait approximately five minutes before restarting. This allows time for the refrigeration pressures to equalize. If the pressures are not allowed to equalize, the compressor will short-cycle (clicking sound) and no cooling will occur.

The controller circuit board may be defective.

Service Assistance

If, after following these troubleshooting steps, your unit fails to operate properly, contact our Service Department for assistance (see Preface). Before calling, please obtain the following information:

BOM number
Serial number
Voltage of unit
Voltage of power source
Temperature of facility water
Software version

Section X Diagrams

Refrigeration Flow Diagram
(HX-75 and HX-150)

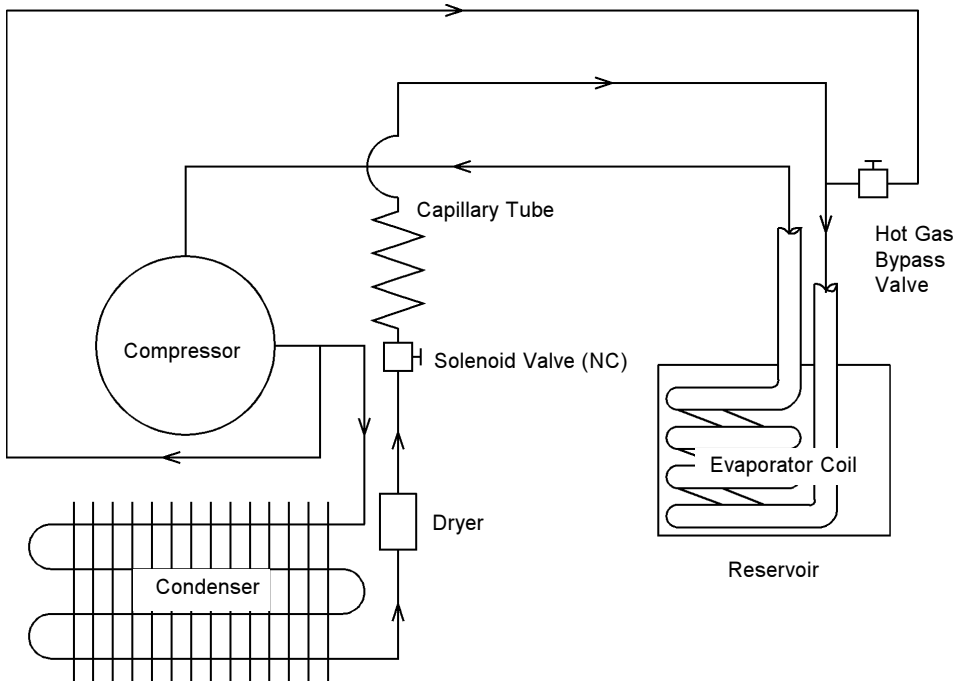

Refrigeration Flow Diagram
(HX-300 through HX-750)

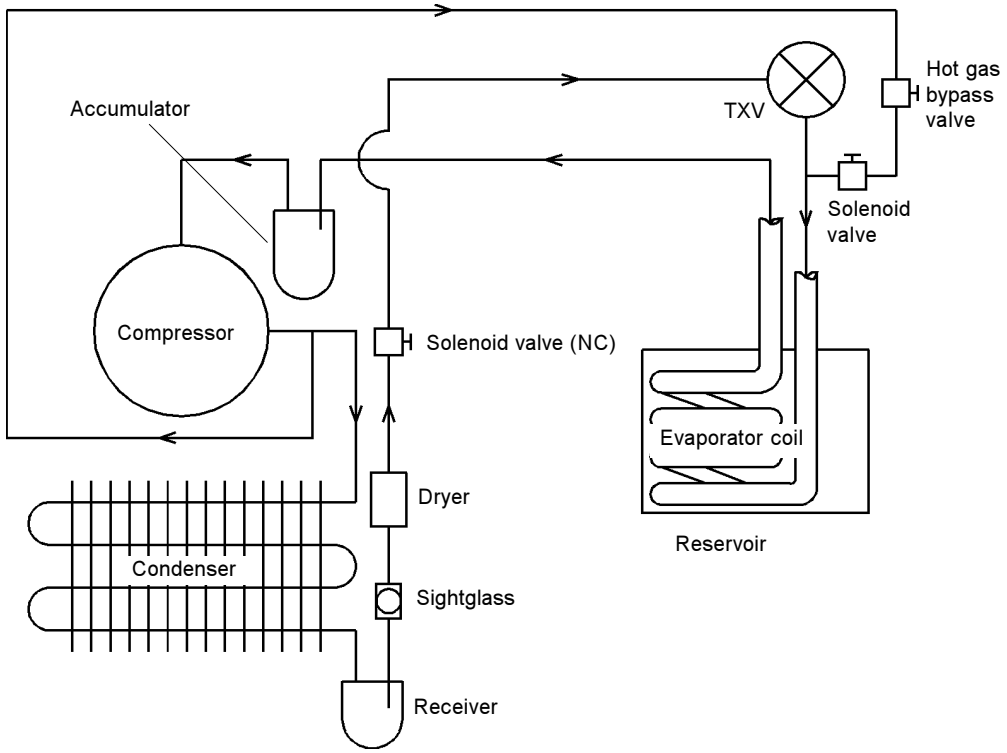

Pump Flow Diagram (CP Pumps)

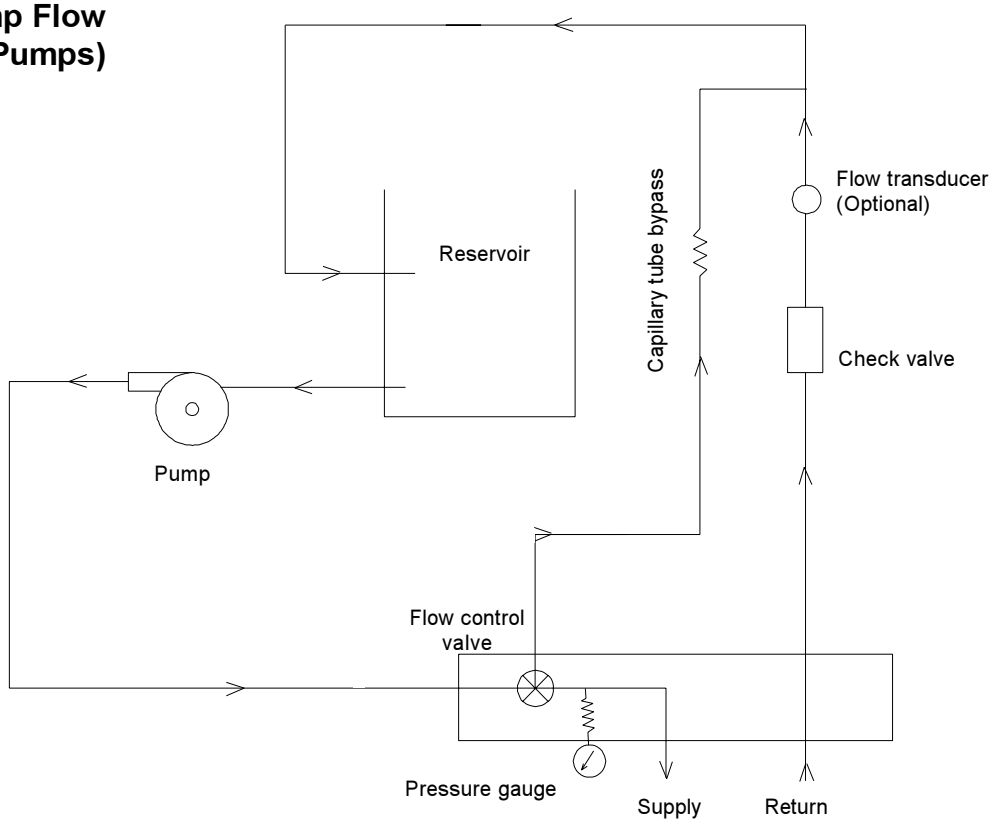

Pump Flow Diagram (PD and TU Pumps)

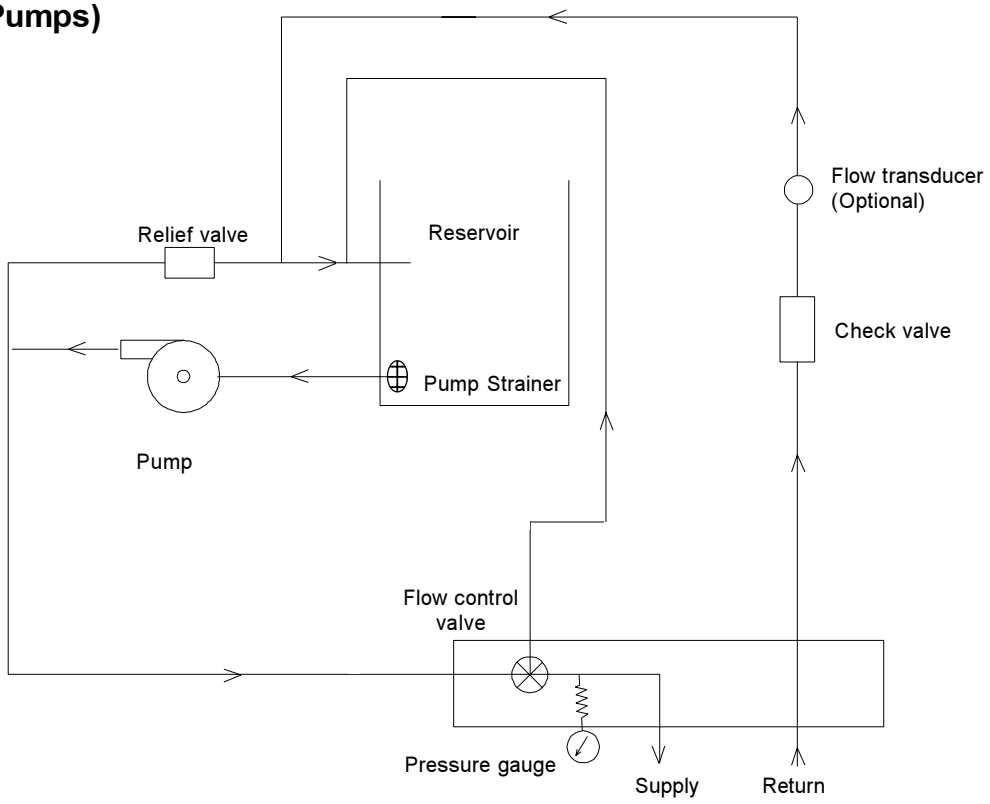

Dimensions

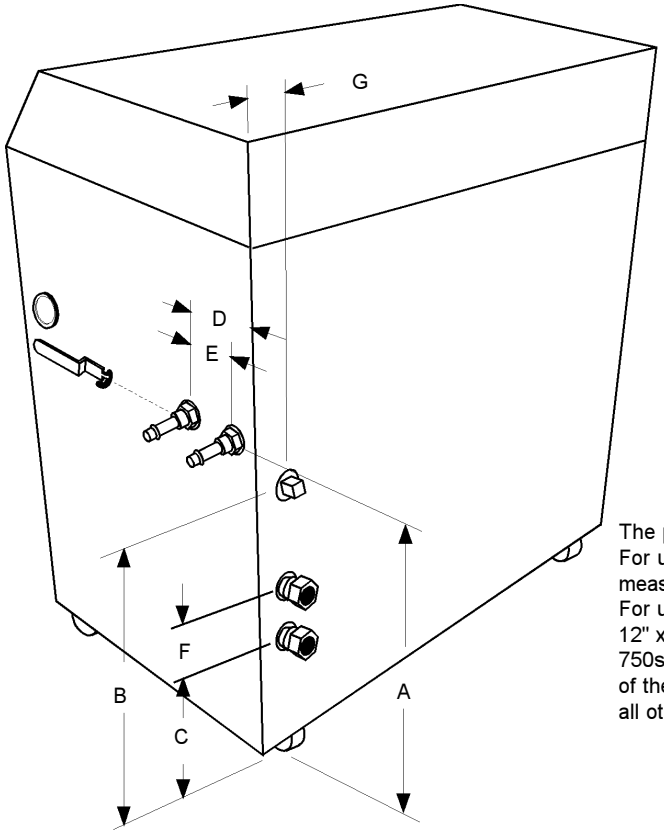

The pullbox comes in two sizes. For units without heaters the box measures 6" x 6" x 4" (H x W x D). For units with heaters it measures 12" x 16" x 4" (H x W x D). On HX-750s the box is located on the rear of the unit, it is on the left side for all other units.

Unit Dimensions	HX-75	HX-150	HX-300	HX-500	HX-750AC*
Dimension A	16	20	25 3/8	25¼	41
Dimension B	15¼	19¼	23½	21 1/8	33¾
Dimension C	8¼	9¼	8 3/8	5½	NA
Dimension D	7¼	7¼	7½	9½	9½
Dimension E	3	3	3	3	3
Dimension F	3	3	3	5½	NA
Dimension G	1 3/8	1 3/8	1 ½	2¼	NA
Dimension H	2½	2½	2 3/8	2¼	2¼
Dimension I	25 7/8	28½	32½	36 1/8	36
Dimension J	48½	54	64 7/8	73½	86¼
Crate Dimensions (H x W x D)	46x30x27	49x33x29	55x40x33	61x54x36	74x54x36

* Air-cooled units. Water-cooled units are the same size as the HX-500 units.

1. Dimensions are given in inches, ±1/8 inch.
2. Model HX-750 with a water-cooled condenser has the same dimensions as an HX-500.
3. Dimension A is the distance from the floor to the center of the SUPPLY and RETURN connections.
4. Dimension B is the distance from the floor to the center of the DRAIN connection.
5. Dimension C is the distance from the floor to the center of the tap water outlet connection.
6. Dimension D is the distance from the center of the SUPPLY connection to the rear of the unit case.
7 Dimension E is the distance between the SUPPLY and RETURN connections
8. Dimension F is the distance between the center of the TAP WATER connections (upper inlet and lower outlet).
9. Dimension G is the distance from the edge of the unit case to the center of the three plumbing connections.
10. Dimension H is the distance from the floor to the bottom of the case, height of the castors (not shown).
11. Dimension I is the depth of the unit with the case top open (not shown).
12. Dimension J is the height of the unit with the case top open (not shown).

WARRANTY

Thermo NESLAB Instruments, Inc. warrants for 12 months from date of shipment any Thermo NESLAB unit according to the following terms.

Any part of the unit manufactured or supplied by Thermo NESLAB and found in the reasonable judgment of Thermo NESLAB to be defective in material or workmanship will be repaired at an authorized Thermo NESLAB Repair Depot without charge for parts or labor. The unit, including any defective part must be returned to an authorized Thermo NESLAB Repair Depot within the warranty period. The expense of returning the unit to the authorized Thermo NESLAB Repair Depot for warranty service will be paid for by the buyer. Thermo NESLAB's responsibility in respect to warranty claims is limited to performing the required repairs or replacements, and no claim of breach of warranty shall be cause for cancellation or recision of the contract of sales of any unit.With respect to units that qualify for field service repairs, Thermo NESLAB's responsibility is limited to the component parts necessary for the repair and the labor that is required on site to perform the repair. Any travel labor or mileage charges are the financial responsibility of the buyer.

The buyer shall be responsible for any evaluation or warranty service call (including labor charges) if no defects are found with the Thermo NESLAB product.

This warranty does not cover any unit that has been subject to misuse, neglect, or accident. This warranty does not apply to any damage to the unit that is the result of improper installation or maintenance, or to any unit that has been operated or maintained in any way contrary to the operating or maintenance instructions specified in Thermo NESLAB's Instruction and Operation Manual. This warranty does not cover any unit that has been altered or modified so as to change its intended use.

In addition, this warranty does not extend to repairs made by the use of parts, accessories, or fluids which are either incompatible with the unit or adversely affect its operation, performance, or durability.

Thermo NESLAB reserves the right to change or improve the design of any unit without assuming any obligation to modify any unit previously manufactured.

THE FOREGOING EXPRESS WARRANTY IS IN LIEU OF ALL OTHER WARRANTIES, EXPRESSED OR IMPLIED, INCLUDING BUT NOT LIMITED TO WARRANTIES OR MERCHANTABILITY AND FITNESS FOR A PARTICULAR PURPOSE.

Thermo NESLAB'S OBLIGATION UNDER THIS WARRANTY IS STRICTLY AND EXCLUSIVELY LIMITED TO THE REPAIR OR REPLACEMENT OF DEFECTIVE COMPONENT PARTS AND Thermo NESLAB DOES NOT ASSUME OR AUTHORIZE ANYONE TO ASSUME FOR IT ANY OTHER OBLIGATION.

Thermo NESLAB ASSUMES NO RESPONSIBILITY FOR INCIDENTAL, CONSEQUENTIAL, OR OTHER DAMAGES INCLUDING, BUT NOT LIMITED TO LOSS OR DAMAGE TO PROPERTY, LOSS OF PROFITS OR REVENUE, LOSS OF THE UNIT, LOSS OF TIME, OR INCONVENIENCE.

This warranty applies to units sold in the United States. Any units sold elsewhere are warranted by the affiliated marketing company of Thermo NESLAB Instruments, Inc. This warranty and all matters arising pursuant to it shall be governed by the law of the State of New Hampshire, United States. All legal actions brought in relation hereto shall be filed in the appropriate state or federal courts in New Hampshire, unless waived by Thermo NESLAB.

HX Series
Recirculating Chiller

NESLAB Manual P/N 002142
Rev. 08/25/97

UL LISTED

Installation, Operation, and Maintenance Manual

HX Series Recirculating Chiller
Installation, Operation, and Maintenance Manual

Table of Contents

PREFACE

Compliance 5
Unpacking 5
Warranty 5
After-sale Support 5

SECTION I
Safety

Warnings 6

SECTION II
General Information

Description 7
Specifications 8

SECTION III
Installation

Site (Air-cooled Units) 9
Site (Water-cooled Units) 10
Electrical Requirements 11
Plumbing Requirements 11
Fluids 13
Water Quality Recommendations 13
Filling Requirements 14

SECTION IV
Temperature Controller

Temperature Controller 15
Refrigeration Control 15
Start Up 16
Temperature Adjustment 16
Level Indicator 16
DL Option 16
DL+I Option 17
DL+A Option 18
Main Electrical Enclosure 21

SECTION V
Operation

Flow Control 27
Start Up 27
Pressure Gauge 27
Pressure Relief Valve 28
High Pressure Cutout 28

SECTION V
Operation

Flow Control 22
Flow Meter (Optional) 22
Pressure Gauge 22
Pressure Relief Valve 23
Pump Motor Overload Protector 23
External Pressure Regulator (Optional) 24
Accessory Connector 25
Accessory Connector Circuitry Details 26
Remote Connector 27
Remote Connector Circuitry Details (2RECP) 28
Control Connector Circuitry Details (3RECP) 29
Shorting Plug Positions 30
Potentiometer Adjustments/Calibration 32

SECTION VI
Maintenance

Service Contracts 34
Condenser Cleaning (Air-cooled units only) 34
Algae 34

SECTION VII
Service

Configuration 35
Reservoir Cleaning 36
Pump Strainer 36
Flow Switch Strainer (Optional) 37
Pump Lubrication 37
Phase Rotation 38

SECTION VIII
Troubleshooting

Checklist 39
Service Assistance 39

SECTION IX
Diagrams

Refrigeration Flow 40
Pump Flow (CP Pumps) 41
Pump Flow (PD and TU Pumps) 41

APPENDIX

DeltaTemp Programming Software

Warranty

Air-Cooled HX Series Quick Reference Operating Procedures

Installation
Position the unit so the intake and discharge are not impeded. Inadequate ventilation will cause a reduction in cooling capacity and, in extreme cases, compressor failure.

Avoid excessively dusty areas and institute a periodic cleaning schedule. For proper operation, the unit needs to pull substantial amounts of air through a condenser. A build up of dust or debris on the fins of the condenser will lead to a loss of cooling capacity.

The unit will retain its full rated capacity in ambient temperatures up to approximately +24°C.

Ensure the voltage of the power source meets the specified voltage, ±10%.

The plumbing connections are located on the rear of the unit and are labelled SUPPLY and RETURN. These connections are ¾ inch FPT. Remove the plastic protective plugs from both plumbing connections. Connect the SUPPLY fitting to the inlet of your application. Connect the RETURN fitting to the outlet of your application.

To fill the reservoir open the hinged access panel on the left case top and remove the reservoir cover by unscrewing the thumbscrews. Fill the reservoir to within to a level just below the perforated hand guard. If the fluid capacity of your application and recirculation lines are significant, have extra fluid on hand.

Tap water is the recommended fluid for operation from +8°C to +35°C. Below +8°C, a non-freezing fluid must be used. A mixture of tap water and laboratory grade ethylene glycol is suggested.

Operation
Before starting the unit, double check all electrical and plumbing connections. Make sure the circulating system has been filled with cooling fluid.

The unit must be connected to the power source for at least 12 hours to allow the oil to be heated and separated from the refrigerant

To start the unit, place the Power On/Off switch to the On position. The Cool and Idle LEDs on the front panel indicate the status of the refrigeration system. Cool is on when the unit is removing heat from the cooling fluid, Heat is on when the unit is in the hot gas bypass mode. As the operating temperature approaches the setpoint, the LEDs cycle.

Temperature Adjustment
To display the temperature setpoint, press and hold the Setpoint Read button. To adjust the temperature setpoint, press and hold the Setpoint read button and turn the Adjust knob until the desired temperature setpoint is indicated on the digital display. Once the setpoint is adjusted, release the Setpoint Read button. The display will now indicate the temperature of the fluid in the reservoir.

Flow Control
The RECIRCULATING FLOW CONTROL handle controls the flow rate to your application. In the “+” position you receive full flow, the “-” position is no flow.

Periodic Maintenance
Periodically inspect the reservoir fluid. If cleaning is necessary, flush the reservoir with a cleaning fluid compatible with the circulating system and the cooling fluid.

The cooling fluid should be replaced periodically. When operating at low temperatures, the concentration of water in the cooling fluid will increase over time, leading to a loss of cooling capacity.

Periodic vacuuming of the condenser fins is necessary. The frequency of cleaning depends on the operating environment. We recommend a visual inspection of the condenser be made monthly after initial installation. After several months, the cleaning frequency will be established.

Units with PD and TU pumps have a strainer. If debris is in the system, the strainer will prevent the material from being drawn into the pump and damaging the pump vanes.

After initial installation, the strainer may become clogged. The strainer must be cleaned after the first week of installation. After this first cleaning, a monthly visual inspection is recommended. After several months, the frequency of cleaning will be established.

Before cleaning the strainer, disconnect the power cord from the power source and drain the reservoir.

Water-Cooled HX Series Quick Reference Operating Procedures

Installation
Position the unit in a clean environment with easy access to facility cooling water and a drain. The facility water requirements must meet those specified in the instruction or unit performance will be derated.

Ensure the voltage of the power source meets the specified voltage, ±10%.

The plumbing connections are located on the rear of the unit and are labelled TAP WATER, DRAIN, SUPPLY and RETURN. Remove the plastic protective plugs from all the plumbing connections. Connect the TAP WATER fitting to the facility cooling water and the DRAIN fitting to a drain. Connect the SUPPLY fitting to the inlet of your application and the RETURN fitting to the outlet of your application.

To fill the reservoir open the hinged access panel on the left case top and remove the reservoir cover by unscrewing the thumbscrews. Fill the reservoir to within to a level just below the perforated hand guard. If the fluid capacity of your application and recirculation lines are significant, have extra fluid on hand.

Tap water is the recommended fluid for operation from +8°C to +35°C. Below +8°C, a non-freezing fluid must be used. A mixture of tap water and laboratory grade ethylene glycol is suggested.

Operation
Before starting the unit, double check all electrical and plumbing connections. Make sure the circulating system has been filled with cooling fluid.

Ensure the facility water is turned on.

The unit must be connected to the power source for at least 12 hours to allow the oil to be heated and separated from the refrigerant

To start the unit, place the Power On/Off to the On position. The Cool and Idle LEDs on the front panel indicate the status of the refrigeration system. Cool is on when the unit is removing heat from the cooling fluid, Heat is on when the unit is in the hot gas bypass mode. As the operating temperature approaches the setpoint, the LEDs cycle.

Temperature Adjustment
To display the temperature setpoint, press and hold the Setpoint Read button. To adjust the temperature setpoint, press and hold the Setpoint read button and turn the Adjust knob until the desired temperature setpoint is indicated on the digital display. Once the setpoint is adjusted, release the Setpoint Read button. The display will now indicate the temperature of the fluid in the reservoir.

Flow Control
The RECIRCULATING FLOW CONTROL handle controls the flow rate to your application. In the “+” position you receive full flow, the “-” position is no flow.

Periodic Maintenance
Periodically inspect the reservoir fluid. If cleaning is necessary, flush the reservoir with a cleaning fluid compatible with the circulating system and the cooling fluid.

The cooling fluid should be replaced periodically. When operating at low temperatures, the concentration of water in the cooling fluid will increase over time, leading to a loss of cooling capacity.

Periodic vacuuming of the condenser fins is necessary. The frequency of cleaning depends on the operating environment. We recommend a visual inspection of the condenser be made monthly after initial installation. After several months, the cleaning frequency will be established.

Units with PD and TU pumps have a strainer. If debris is in the system, the strainer will prevent the material from being drawn into the pump and damaging the pump vanes.

After initial installation, the strainer may become clogged. The strainer must be cleaned after the first week of installation. After this first cleaning, a monthly visual inspection is recommended. After several months, the frequency of cleaning will be established.

Before cleaning the strainer, disconnect the power cord from the power source and drain the reservoir.

Preface

Compliance

Products tested and found to be in compliance with the requirements defined in the EMC standards defined by 89/336/EEC as well as Low Voltage Directive (LVD) 73/23/EEC can be identified by the CE label on the rear of the unit. The testing has demonstrated compliance with the following directives:

LVD, 73/23/EEC	Complies with UL 3101-1:93
EMC, 89/336/EEC	EN 55011, Class A Verification
	EN 50082-1:1992
	IEC 1000-4-2:1995
	IEC 1000-4-3:1994
	IEC 1000-4-4:1995

For any additional information refer to the Letter of Compliance that shipped with the unit (Declaration of Conformity).

Unpacking

Retain all cartons and packing material until the unit is operated and found to be in good condition.

On units with a remote control box, the box is packed in a separate carton. Be sure to locate this separate carton; do not dispose of it by mistake.

If the unit shows external or internal damage, or does not operate properly, contact the transportation company and file a damage claim. Under ICC regulations, this is your responsibility.

Warranty

The unit has a warranty against defective parts and workmanship for one full year from date of shipment. Refer to the last page of this manual for complete warranty details.

After-sale Support

NESLAB is committed to customer service both during and after the sale. If you have questions concerning the operation of your unit or the information in this manual, contact our Sales Department. If your unit fails to operate properly or if you have questions concerning spare parts or Service Contracts, contact our Service Department.

Before calling, please refer to the serial number label on the rear of the case top to obtain the following information (see Section II, Description for the serial number label location):

- BOM number _____

- Serial number _____

Section I Safety

Warnings

Make sure you read and understand all instructions and safety precautions listed in this manual before installing or operating your unit. If you have any questions concerning the operation of your unit or the information in this manual, contact our Sales Department for assistance (see Preface, After-sale Support).

Performance of installation, operation, or maintenance procedures other than those described in this manual may result in a hazardous situation and may void the manufacturer's warranty.

Transport the unit with care. Sudden jolts or drops can damage the refrigeration lines.

Do not attempt to defeat any of the interlock switches or safety features built into the unit.

Observe all warning labels.

Never remove warning label.

Never operate damaged or leaking equipment.

Never operate the unit without cooling fluid in the fluid reservoir.

Make sure the unit is off before connecting or disconnecting the power cord or other cables.

Always turn off the unit and disconnect the power cord from the power source before performing any service or maintenance procedures, or before moving the unit.

Always empty the fluid reservoir before moving the unit.

Never operate equipment with damaged power cords.

Refer service and repairs to a qualified NESLAB technician.

In addition to the safety warnings listed above, warnings are posted throughout the manual. These warnings are designated by an exclamation mark inside an equilateral triangle with text highlighted in bold. Read and follow these important instructions. Failure to observe these instructions can result in permanent damage to the unit, significant property damage, or personal injury or death.

Section II General Information

Description

The HX Series Recirculating Chiller is designed to provide a continuous flow of cooling fluid at a constant temperature and volume. Each unit is listed by Underwriters Laboratories Inc., Standard for Commercial Refrigeration and Freezers, to comply with UL-471.

The unit consists of an air-cooled or water-cooled refrigeration system, a stainless steel fluid reservoir, a fluid recirculation pump, and a digital temperature controller.

Throughout the manual, you will be asked to consult the unit's serial number label, or the pump identification label, or both, for specific information. Both labels are located on the electrical enclosure door.

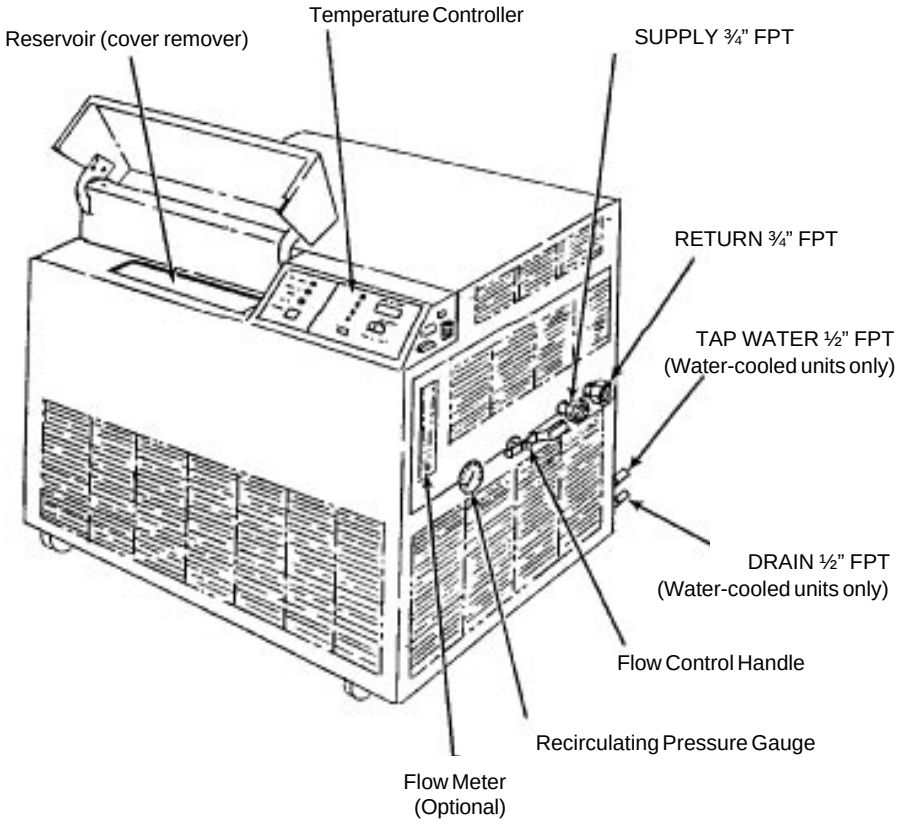

Specifications

	HX-200	HX-300
Temperature Range	+5°C to +35°C	
Temperature Stability	±0.1°C	
Cooling Capacity		
Watts	6200 @ 20°C	10000 @ 20°C
BTU/Hr	21140 @ 20°C	30690 @ 20°C
Pumping Capacity[1]	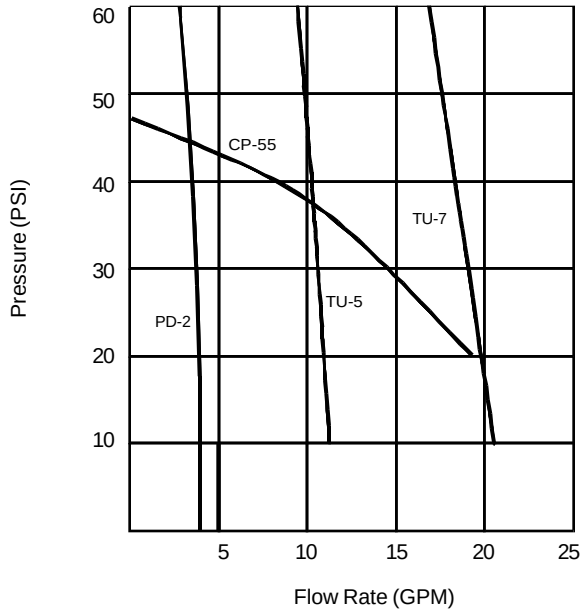	
Unit Dimensions (H x W x D)		
Inches	45⅝ x 33¾ x 24¼	
Centimeters	115.9 x 85.7 x 61.6	
Reservoir Volume		
Gallons	15.0	
Liters	56.8	
Shipping Weight		
Pounds	450	525
Kilograms	204	238

1. Refer to the pump identification label on the electrical enclosure door.

Section III Installation

Site (Air-cooled Units)

The unit should be located in a laboratory or clean industrial environment where ambient temperatures are inside the range of +50°F to +104°F (+10°C to +40°C).

The unit will retain its full rated capacity in ambient temperatures to approximately +75°F (+24°C). Above +75°F, derate the cooling capacity 1% for every 1°F above +75°F, to a maximum ambient temperature of +95°F. In degrees Celsius, derate the cooling capacity 1% for every 0.5°C above +24°C, to a maximum ambient temperature of +35°C.



Never place the unit in a location where excessive heat, moisture, or corrosive materials are present.

The unit has an air-cooled refrigeration system. It must be positioned so the air intake and discharge are not impeded. Air is drawn through the front of the unit and discharged through the side and rear panels. A minimum of 5 feet (1.5 meters) on all four sides of the unit is necessary for ventilation.

In some applications where space is at a premium, the minimum ventilation clearance can be compromised. However, consult our Sales Department before positioning the unit in a location with less minimum clearance than listed above. Inadequate ventilation will cause a reduction in cooling capacity and, in extreme cases, compressor failure.

Excessively dusty areas should be avoided and a periodic cleaning schedule should be instituted (see Section VI, Condenser Cleaning).

A reservoir fluid stirrer motor is located under the case top. Heat generated by the stirrer motor is discharged through vents in the case top. Do not block the vents. A minimum clearance of 2 inches (5 centimeters) is necessary for adequate ventilation.

Site (Water-cooled units)

The unit should be located in a laboratory or clean industrial environment with easy access to a facility cooling water supply and a drain.

All units are equipped with castors for easy movement. This allows the unit to be placed in a small area, as long as there is ample space for the unit to be moved for access on all four sides. A minimum access clearance of 3 feet (1 meter) on two adjacent sides is recommended.

The facility cooling water supply must meet or exceed the requirements listed in the table below for the unit to operate at its full rated capacity. If the facility cooling water does not meet these standards, the cooling capacity will be derated.

As the temperature of the cooling water supply increases, the required flow rate and pressure of the cooling water supply increases. For example, if the temperature of the cooling water supply is +65°F, the flow rate for an HX-200 must be at least 2.5 gallons per minute, with a pressure differential of at least 6.0 PSI. However, if the temperature of the cooling water supply is +85°F, the flow rate must be at least 6.0 gallons per minute, with a pressure differential of at least 18.0 PSI.

If the unit is being used with a building water supply, the back pressure of the drain must be less than the supply pressure.

A water regulating valve, located in the TAP WATER line, regulates the flow rate of the cooling water supply as it enters the unit. The valve regulates the flow rate based on the heat load. Flow through the unit stops automatically when the unit is shut off.

	Temperature of cooling water supply		
	+65°F (+18°C)	**+75°F (+24°C)**	**+85°F (+29°C)**
HX-200			
Flow Rate			
Gallons per minute	2.5	3.5	6.0
Liters per minute	9.5	13.2	22.7
Pressure Drop			
PSI	6.0	7.0	18.0
Bar	0.41	0.48	1.24
HX-300			
Flow Rate			
Gallons per minute	4.0	6.5	11.0
Liters per minute	15.1	24.6	41.6
Pressure Drop			
PSI	8.0	13.5	25.0
Bar	0.55	0.93	1.72

Electrical Requirements



The unit construction provides extra protection against the risk of electric shock by grounding appropriate metal parts. It is the user's responsibility to assure a proper ground connection is provided.

Verify electrical requirements by reviewing the ratings listed on the nameplate on the electrical enclosure. Ensure the voltage of the power source agrees with the unit's voltage and frequency rating. The unit is designed to tolerate deviations of ±10% from the rated line voltage.

Install the unit in conformance with National Electric Code, UL, and all other local, state and federal electrical codes. Check all wiring to ensure it is both properly connected and protected from the elements.

Units are equipped with a compressor crankcase heater. The crankcase heater warms the oil in the compressor and prevents refrigerant from mixing with the oil. Before start up, the unit must be connected to its power source for at least 12 hours. This allows time for the oil to be heated and separate from the refrigerant.

NOTE: Whenever power is applied, the unit's Main Power indicator will be illuminated.

Plumbing Requirements

Air-cooled and water-cooled units

Before installing the unit to an instrument that previously used tap water as a cooling fluid, flush the instrument several times to remove any rust or scale that has built up. Consult the manufacturer of the instrument for a cleaning fluid recommendation.

The plumbing fittings used to connect the HX to the instrument being cooled are located on the right side of the unit (labelled SUPPLY and RETURN). These connections are ¾ inch FPT.

Remove the protective plugs from the SUPPLY and RETURN connections. Connect the SUPPLY fitting to the inlet of the instrument being cooled. Connect the RETURN fitting to the outlet of the instrument being cooled.

The RESERVOIR DRAIN connection, located on the rear of the unit, is a ½ inch FPT fitting connected internally to the unit's fluid reservoir. This fitting is for draining the reservoir. The unit is shipped with a ½ inch MPT plug installed in this fitting. Remove the plug to drain the reservoir.

Two plumbing adapters (¾ inch MPT x 5/8 inch hose) are included with the unit. If the unit is being plumbed to the instrument being cooled using flexible tubing, install the adapters in the SUPPLY and RETURN plumbing ports. To prevent leaking, wrap the threads of the adapters with Teflon® sealing tape before installing them in the plumbing ports. The adapters will accept ½ or 5/8 inch ID flexible tubing.

If the unit is "hard plumbed" to the instrument being cooled or to the cooling water supply, damage can occur if the unit is bumped or jolted from its site. Provisions should be made to prevent the unit from being moved after installation. Once the unit is plumbed, secure the locking castors on the unit's base. If the unit is located in a heavy traffic area where the possibility of collision is imminent, it may be necessary to secure the unit to the site using blocks or mounting brackets.

Flexible tubing, if used, should be heavy wall or reinforced construction. All tubing should be rated to withstand 110 psi at +35°C. Make sure all tubing connections are securely clamped. Avoid running tubing near radiators, hot water pipes, etc. If substantial lengths of tubing are necessary, insulation may be required to prevent loss of cooling capacity.

Tubing and insulation are available from NESLAB. Contact our Sales Department for more information (see Preface, After-sale Support).

It is important to keep the distance between the unit and the instrument being cooled as short as possible, and to use the largest diameter tubing practical. Tubing should be straight and without bends. If diameter reductions must be made, they should be made at the inlet and outlet of the instrument being cooled, not at the HX.

If substantial lengths of connecting tubing are required, they should be pre-filled with cooling fluid before connecting them to the unit.

Water-cooled units

The plumbing connections used to connect the water-cooled condenser in the HX to the facility cooling water supply are located at the rear of the unit (labelled TAP WATER and DRAIN). These fittings are ½ inch FPT.

Remove the plastic protective plugs from the TAP WATER and DRAIN connections. Connect the TAP WATER fitting to the facility cooling water supply. Connect the DRAIN fitting to a drain.

Fluids

The selected cooling fluid must have a viscosity of 50 centistokes or less at the lowest operating temperature.

Never use flammable or corrosive fluids with this unit. Distilled and deionized water may be aggressive and cause material corrosion. Please contact NESLAB before subjecting this unit to prolonged exposure to distilled or deionized water.

Tap water is the recommended fluid for operation from +8°C to +35°C.

Below +8°C, a non-freezing solution is required. A 50/50 mixture, by volume, of water and laboratory grade ethylene glycol is suggested.

Do not use automobile anti-freeze. Commercial anti-freeze contains silicates that can damage the pump seals. Use of automobile anti-freeze will void the manufacturer's warranty.

Water Quality Recommendations

Unfavorably high total ionized solids (TIS) can accelerate the rate of galvanic corrosion. These contaminants can function as electrolytes which increase the potential for galvanic cell corrosion and lead to localized corrosion such as pitting which can be observed at the studs and on the outside surface of cooling coils. Eventually, the pitting will become so extensive that the coil will leak refrigerant into the water reservoir.

As an example, raw water in the United States averages 171 ppm (as NaCl). The recommended level for use in a water system is between 0.5 to 5.0 ppm

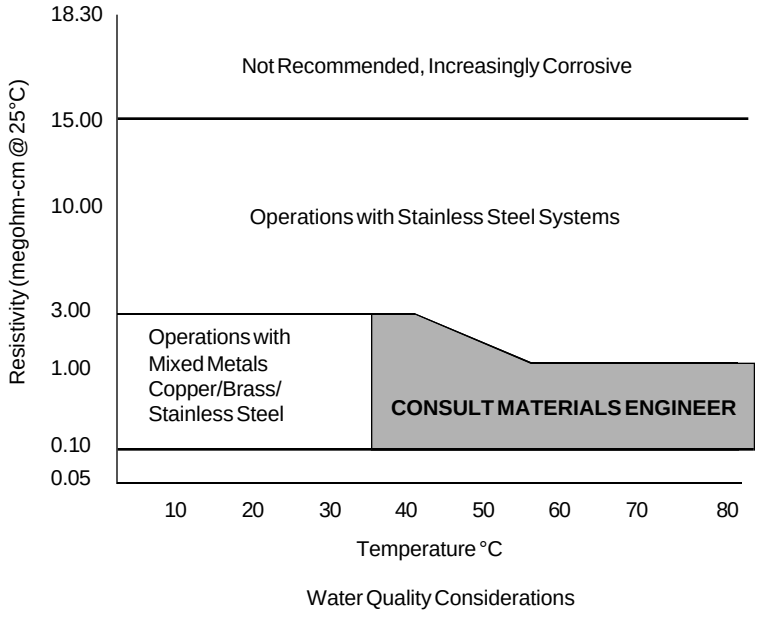

Water Quality Considerations

(as NaCl). Recommendation: Initially fill the tank with distilled/deionized water. Do not use untreated tap water as the total ionized solids level may be too high. Maintain this water quality at a resistivity of between 1 to 10 megohm-cm (compensated at 25°C) by using a purification system. The above two recommendations will reduce the electrolytic potential of the water and prevent or reduce the galvanic corrosion observed.

Filling Requirements

Before filling, ensure the unit's reservoir drain plug is properly installed.

The reservoir cover is located under the hinged access panel at the left of the case top, see illustration on page 6. Open the panel, loosen the two thumbscrews and remove the reservoir cover.

Fill the fluid reservoir with cooling fluid to a level just below the perforated hand guard at the top of the reservoir.

The fluid capacity of the instrument being cooled and the recirculation lines may be significant. To prevent the lowering of the fluid level in the reservoir below the operating level, have extra cooling fluid on hand to keep the reservoir filled to just below the hand guard.

When the recirculating system is full, replace the reservoir cover and close the access panel.

Section IV Temperature Controllers

Temperature Controllers

Three options are available, DL, DL+I (Interlocks), and DL+A (Alarm). Refrigeration control, start up and temperature adjustment work the same way with all three options

Refrigeration Control

The refrigeration compressor runs continuously while a hot gas bypass system, designed to eliminate compressor cycling and premature wear, is used to maintain constant temperature.

The Cool and Idle indicators, located on the control panel, indicate the status of the refrigeration system. The Idle indicator is lit when the unit is in the hot gas bypass mode. The Cool indicator is lit when the refrigeration system is removing heat from the cooling fluid. As the fluid temperature approaches the temperature setpoint, the indicators cycle on and off to indicate the duty cycle of the system. The unit can be in the Cool or the Idle mode, but never both at the same time. A balance between Cool and Idle is needed to control temperature.

All units are equipped with high and low refrigeration pressure switches. Should either pressure switch activate, the unit will shut down. After the cause of the fault is identified and corrected, the switch will have to be manually reset before you can restart the unit.

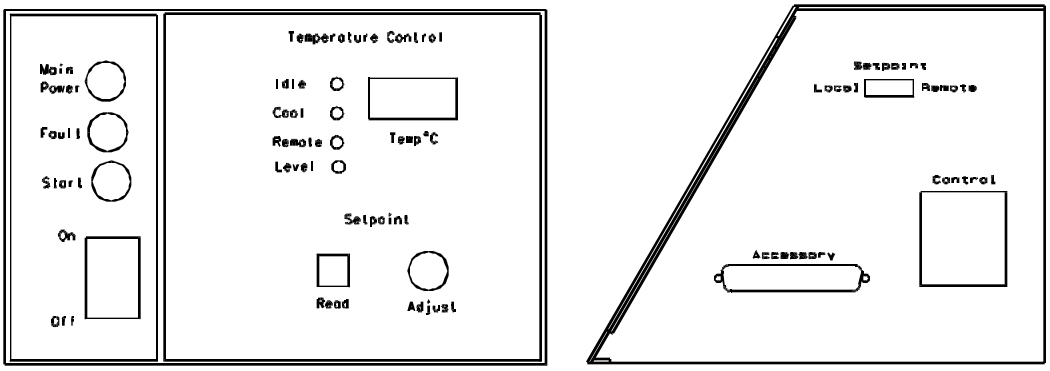

DL/DL+I Temperature Controller

Start Up

Before starting the unit, double check all electrical and plumbing connections and make sure the recirculating system (the HX, the instrument being cooled, and the tubing that connects them) has been properly filled with cooling fluid. Ensure the flow control valve is not fully closed (see Section V, Flow Control).

NOTE: For water-cooled units ensure the facility water is turned on.

The Main Power indicator on the controller illuminates only to indicate the unit's main power circuit is energized.

To start the unit, place the Power On/Off switch to the On position and then depress the Start switch. The pump and refrigeration will start and the Temp°C display will indicate the temperature of the reservoir fluid. To shut the unit off, place the Power On/Off switch to the Off position.

Temperature Adjustment

To display the temperature setpoint, press and hold the Setpoint Read button. To adjust the temperature setpoint, press and hold the Setpoint Read button and turn the Adjust dial until the desired temperature setpoint is indicated on the Temp°C LED display. Once the setpoint is adjusted, release the Setpoint Read button. The Temp°C LED display will indicate the reservoir fluid temperature.

Inadvertent movement of the Adjust dial will result in a change in the setpoint. The change will not be immediately reflected on the Temp°C LED display unless the Setpoint Read button is pressed. The display will eventually change as the unit responds to the new setpoint.

Level Indicator

The Level indicator on the DL and DL+I options is connected to a float switch in the reservoir. The indicator warns the user of a low cooling fluid level in the reservoir. A low fluid level condition occurs when the cooling fluid in the reservoir drops below the operating level. In addition to the indication the alarm, if installed, will sound. The indicator/alarm serves only as a warning. The unit will not shut down as a result of a low fluid level condition. The optional alarm can be muted using the Mute/Alarm toggle switch located inside the main electrical enclosure, see page 21.

DL Option

The Fault indicator illuminates when the compressor contactor is off. The cause of the fault must be found and corrected before restarting the unit.

DL+I Option

The Digital with Interlock temperature controller is a Digital temperature controller with up to four monitoring options: low temperature, high temperature, low fluid level, and low flow. The controller can be built with any combination of these four monitors. If an interlock detects a fault the Fault indicator illuminates and the alarm, if installed, will sound. The alarm can be muted using the Mute/Alarm toggle switch located inside the main electrical enclosure, see page 21.

Fault Response

Units are configured to shut off in the event that a fault. The relay contacts connected to the controller receptacle will open and the Fault indicator will light. The cause of the fault must be identified and corrected before the unit can be restarted.

You can allow the unit to operate if a fault occurs. This option is set by positioning the Bypass/Normal toggle switch in the main electrical enclosure to Bypass, see page 21 for additional information.

Temperature Interlocks

The optional high and low temperature interlocks are connected to sensors that monitor the temperature of the cooling fluid as it exits the reservoir. The monitors protect the system from exposure to excessively hot or cold cooling fluid. A temperature fault occurs when the fluid temperature exceeds the set temperature limit.

The temperature monitors are located in the main electrical enclosure. To adjust either temperature monitor, turn the appropriate calibrated dial to the desired temperature limit.

Low Fluid Level Interlock

The low fluid level interlock is connected to a float switch in the reservoir. A fault will occur if the reservoir cooling fluid level drops below the operating level.

Low Flow Interlock

The low flow monitor is connected to a flow switch in the RETURN line. A low flow fault occurs when the flow rate of the returning cooling fluid drops below 0.3 gallons per minute (1.0 liters per minute).

When starting a unit, the Start switch must be held depressed until the flow switch “closes” (approximately 5 seconds). If time is not allowed for the flow switch to close, the unit will stop when the Start switch is released.

Interlock Relay Contacts

A set of 15A, 125V contacts are connected to a receptacle on the right side of the controller. This is not a power inlet or outlet. The receptacle is isolated from the circuitry. Its ground pin is connected to the chassis. The Normally Open and Normally Closed contacts are provided for customer use. The contacts will transfer when a fault condition occurs.

DL+A Option

Description

This option features an alarm function as well as additional monitoring capabilities. The monitoring feature will indicate which input caused a fault to be detected. This feature will aid you in troubleshooting your system. Additionally, the temperature display can be remotely monitored using the remote “D” connector on the right side of theremperature controller.

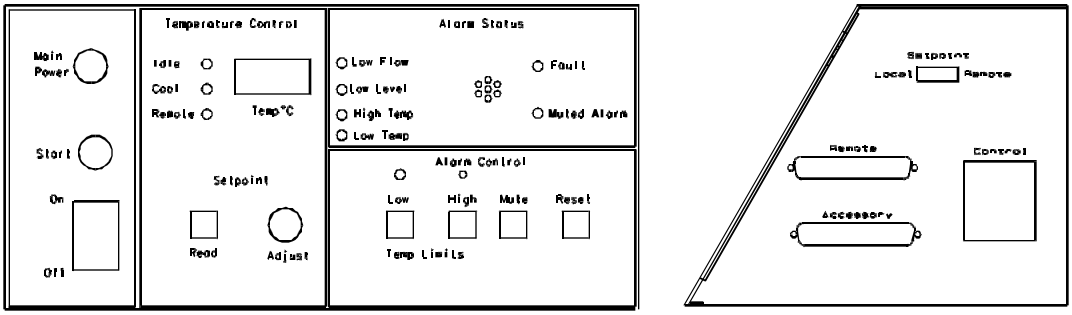

Alarm Control

Alarm Control adjusts the high and low temperature limits of the alarm, activates/deactivates the audible portion of the alarm., and resets the alarm.

To display the high or low temperature limit, press the corresponding button. When the button is pressed, the limit is indicated on the Temp°C display.

To adjust either temperature limit, press the corresponding button and turn the slotted potentiometer located directly above the button (a small screw-driver is required). Limits are adjustable from -45°C to +100°C. The high and low values must be at least 4°C apart for the unit to operate.

The alarm will sound when a limit is exceeded.

The Mute button on the Alarm Control panel alternately activates and mutes the audible alarm as indicated by the Muted Alarm indicator. When the alarm is muted, it will remain muted until the Mute button is depressed again, or until the Reset button on the Alarm Control panel is depressed.

The alarm annunciator can be disabled by moving a shorting plug on the alarm circuit board. When disabled, the Muted Alarm indicator will be illuminated at all times. See the Shorting Plug Positions section on page 30 for additional information.

The alarm does not automatically reset after a fault condition is corrected; you must manually reset the alarm using the Reset switch on the Alarm Control panel.

Alarm Status

The Alarm Status section indicates the status of the fault monitors. Four amber indicators display the status of the Low Level, High Temperature, Low Temperature, and Low Flow fault monitors. In the event of a fault, the cause of the fault must be identified and corrected before the unit can be restarted.

The FAULT TIME DELAY potentiometer (P4) allows adjustment of a preset time delay period following an initial “out of limits” condition. The potentiometer is on the alarm circuit board located behind the Temperature Control panel. The time delay can be set from 20 to 120 seconds. (See Potentiometer Adjustment on page 32 for additional information.)

If the red Fault indicator and any amber indicator are both on steady, a monitor has detected the indicated as outside limits. A fault will be declared only if the preset time limit is exceeded on the Fault Time Delay.

If a fault does occur, the red Fault indicator and the amber indicator will both start to flash. In addition the alarm, if enabled, will sound.

If the red Fault light extinguishes but the amber indicator continues to flash, the limit was exceeded but cleared itself prior to the preset time delay. (This advisory feature can also be defeated by repositioning a shoring plug located behind the controller panel, see Shorting Plug Positions on page 30 for additional information.)

Any subsequent operations occurring as a result of the fault will cause the appropriate indicator to illuminate in a steady state condition, i.e. a low flow causing a high temp. The indicator which caused the fault will continue to flash.

Monitoring Capabilities

The Low Level indicator is connected to a float switch in the reservoir. If a low cooling fluid level condition is detected, the Low Level indicator will light. If the condition is not corrected within 30 seconds the Fault indicator turns on and the audible alarm, if enabled, will sound. The unit will shut down and a set of relay contacts will open (the status of the relay contacts can be monitored using pins 14 and 15 of the Remote connector receptacle on the controller’s side panel, see Remote Connector on pages 27 and 28 for additional information.

The Low level indicator can be disabled by moving a shorting plug on the alarm circuit board. When disabled, the Muted Alarm indicator will be illuminated at all times. See the Shorting Plug Positions section on page 30 for additional information.

The Low Flow indicator is connected to a flow switch in the RETURN line. A low flow fault occurs when the flow rate of the returning cooling fluid drops below 0.3 gallons per minute (1.0 liters per minute). If a low flow condition is detected, the Low Flow indicator will light. If the condition is not corrected within several seconds a Fault occurs and the audible alarm, if enabled, will sound. The unit will shut down and the relay contacts will open.

This feature can also be disabled by moving a shorting plug on the alarm circuit board. When disabled, the Muted Alarm indicator will be illuminated at all times. See the Shorting Plug Positions section on page 30 for additional information.

The High/Low Temp indicators are connected to sensors that monitor the temperature of the cooling fluid as it exits the reservoir. The monitors protect the system from exposure to excessively hot or cold cooling fluid. The limits are set using the potentiometers on the temperature controller panel. If either limit is exceeded the applicable indicator will flash and the alarm, if enabled, will sound. In the event of a high or low temperature fault the unit will shut down and the relay contacts will open.

Main Electrical Enclosure

The Main Electrical Enclosure is located behind a hinged access panel located on the rear of the unit.



Disconnect the unit from its power source before opening the Main Electrical Enclosure.

PUMP O/L

The PUMP O/L indicator illuminates when the pump motor has shut down due to an overload condition. Manually reset the fault condition before restarting the unit. Reset the fault by depressing the grey reset switch on the 1MOL overload relay.

REMOTE/LOCAL

The REMOTE/LOCAL toggle switch allows you to select the source for starting and stopping the unit. When the switch is in the REMOTE position, control is derived from the input connected to the Control receptacle on the right side of the temperature controller. The Remote indicator on the temperature controller will illuminate. In the LOCAL position, the unit's Start switch is in control.

When the LOCAL/REMOTE switch is set to REMOTE, the controller's On/Off switch must be in the On position for the unit to operate. An external switch is necessary to complete the circuit and start the unit.

If the controller's On/Off switch is in the Off position and the toggle switch is in REMOTE, then external switches cannot start the unit. This allows an operator or service person to override the external controls and shut down the unit.

BYPASS/NORMAL

The BYPASS/NORMAL toggle switch determines the unit's response after a power loss. In the BYPASS position, the unit will start when power is restored. In the NORMAL position the unit will have to be manually restarted using the Start switch. On units with the DL+I option this switch is also used to bypass the interlocks so the unit will not shut down if a fault occurs.

RUN/OFF

The RUN/OFF toggle switch impacts the operation of the unit's pump. When the switch is in the RUN position, the pump will continue to operate regardless of the status of the compressor. In the OFF position, the pump will stop when the compressor is not operating.

MUTED/ALARM

The MUTED/ALARM switch is only on the DL and DL+I option. It is used to mute the optional alarm.

Section V Operation

Flow Control

The RECIRCULATING FLOW CONTROL handle, located on the right-hand side of your unit, is connected to a valve that controls the flow rate of the cooling fluid to the instrument being cooled.

When the handle is in the “+” position, the valve is open and all possible cooling fluid is supplied to the instrument being cooled. When the handle is in the “-” position, the valve is closed and no cooling fluid is supplied to the instrument being cooled. When the handle is between these two positions, the flow rate of the cooling fluid is between full flow and no flow. Use a flow meter on the SUPPLY line to adjust the desired flow rate.

On units with DL+I or DL+A options the flow control valve must be opened slightly to allow fluid to circulate through the flow switch that monitors the flow rate. A flow rate of more than 0.3 gallons per minute (1.0 liters per minute) is necessary. If the flow is completely shut off, or if the flow is not adequate, a low flow fault will occur and the unit will not start.



To prevent “water hammering” always move the flow control handle slowly.

Flow Meter (Optional)

An optional flow meter may be installed in the right side of the pump compartment. The meter measures the flow rate in gallons per minute. The flow rate range displayed depends on the type of pump installed in the unit.

Pressure Gauge

Units with PD or TU pumps are equipped with a pressure gauge. Refer to the pump identification label on the electrical enclosure to identify the specific pump installed in the unit.

The RECIRCULATING PRESSURE gauge is located next to the flow control handle. The gauge indicates the operating pressure of the system.

Pressure Relief Valve

Units with a PD or TU type pump have an adjustable pressure relief valve. Refer to the pump identification label on the electrical enclosure to identify the specific pump in your unit.

The pressure relief valve establishes the maximum operating pressure of the unit. If the pressure of the fluid leaving the pump exceeds the valve setting, the relief valve will bypass the fluid within the unit to relieve the pressure. The valve does not determine the actual operating pressure; the operating pressure of the system is determined by the back pressure of the connected equipment and the setting of the flow control valve. If adjustment seems necessary, consult our Service Department for assistance.

Pump Motor Overload Protector

Three phase units with three phase pump motors are equipped with a pump motor overload protector. The overload protector prevents the pump motor from exposure to excessive current. If an overload fault occurs, due, for example, to excessive pressure or flow, or excessive ambient temperature, the overload protector will shut off the pump motor. The unit's compressor will continue to operate. The fault must be manually reset after the cause is identified and corrected (see Preface, After-sale Support).

The indicator and the overload relay (with reset switch) are both located in the main electrical enclosure. The indicator illuminates when a fault is detected.

External Pressure Regulator (Optional)

For applications requiring a maximum pressure less than 55 psi, an External Pressure Reducer (EPR) is available. An EPR allows an adjustable operating pressure of 10 to 50 psi. If the pressure of the fluid leaving the unit exceeds the valve setting the relief valve will bypass the fluid back into the unit to relieve the pressure. The pressure of the system is determined by the back pressure of the connected equipment and the flow rate of the recirculating fluid to your application.

Connect the EPR assembly as shown below. Tighten the hose clamps tight enough to prevent leakage. Do not overtighten or the clamps will “bite” into the flexible tubbing and can cause excessive wear.

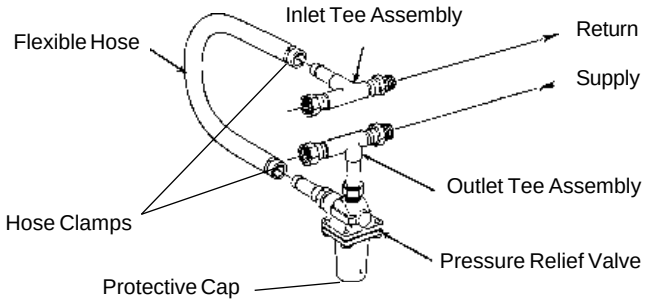

Connect the outlet tee assembly to the inlet of your application. Connect the inlet tee assembly to the outlet of your application.

Adjustment

When adjusting the relief valve some leaking may occur, place a container under the valve during adjustment.

Remove the protective cap and locate a threaded fitting with a slot for a large screwdriver. Hold the threaded fitting in place and loosen the lock nut on the valve body until it is almost flush with the threaded fitting. Unscrew the threaded fitting three to four turns. (If the threaded fitting unscrews completely from the valve housing, screw it back in two to three turns.)

To simulate blockage, close (or pinch off) the hose between the EPR outlet tee assembly and your application. Monitor the operating pressure of the HX unit. Turn the threaded fitting until the desired relief pressure is set (the EPR valve cannot be set lower than the total back pressure of your instrument, or flow will not be received).

Tighten the locknut to secure the position of the threaded fitting. Open the hose between the EPR outlet tee assembly and your application.

Accessory Connector

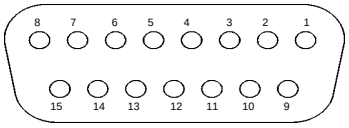

15 pin D-subminiature female receptacle

Pin #	Function
1	Chassis ground.
2	No connection.
3	Span +. Indicates the maximum setpoint value the unit can be set to operate. The temperature scale is 10mV/°C, referenced to analog ground, pin 6 (example: +350mV = +35.0°C).
4	Span -. Indicates the minimum setpoint value the unit can be set to operate. The temperature scale is 10mV/°C, referenced to analog ground, pin 6 (example: +50mV = +5.0°C).
5	No connection.
6	Analog ground. The analog ground is physically separated from the power ground throughout the unit. To prevent offsets that result ground currents, the analog and power ground are only connected at the power supply. Analog ground should only be used as a reference pin.
7	Sensor temperature (current limited through 2.7K OHM resistor). The fluid temperature, as measured by the controller's sensor located in the reservoir, can be read at this pin. The temperature scale is 10mV/°C, referenced to analog ground, pin 6 (example: +150mV = +15.0°C).
8	Setpoint out. The present temperature setpoint can be read at this pin. The temperature scale is 10mV/°C, referenced to analog ground, pin 6 (example: +150mV = +15.0°C).
9	Power ground.
10	Heater output. Will source 3V at 6mA.
11	No connection.
12	Digital display (input only). An external voltage can be displayed on the operator panel digital display by applying the voltage to this pin. The display has a low input resistance and a full scale rating of ±1.99VDC. Input is referenced to analog ground, pin 6. The maximum voltage applied to the display should be limited to ±2VDC.
13	-5V. Power supply of -5VDC (15mA maximum).
14	+5V. Power supply of +5VDC (15mA maximum).
15	Setpoint in. The temperature setpoint can be controlled by applying a known voltage to this pin. The temperature scale is 10mV/°C, referenced to analog ground, pin 6 (example: +230mV = +23.0°C.

Accessory Connector Circuitry Details

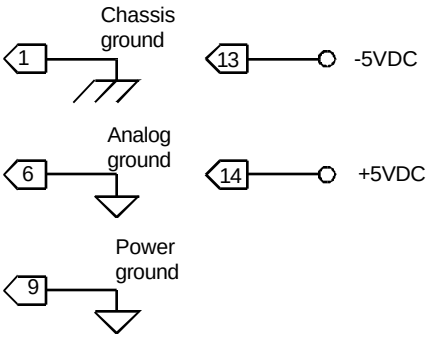

Access Receptacle Equivalent circuits

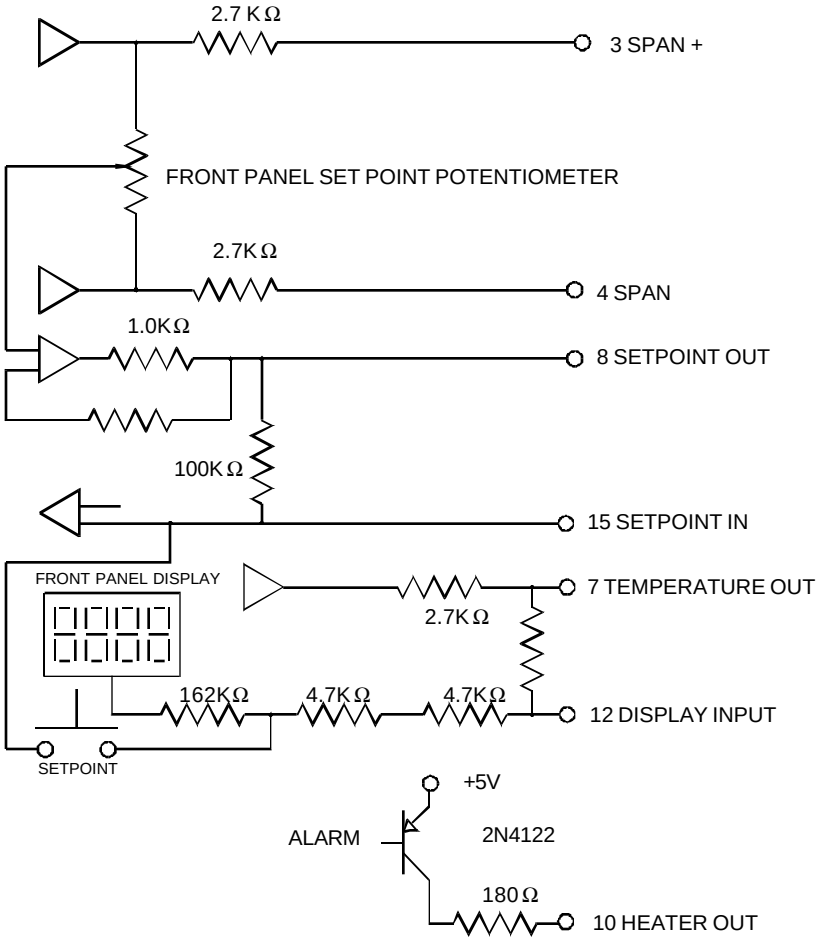

Access Receptacle Circuitry Details

Remote Connector

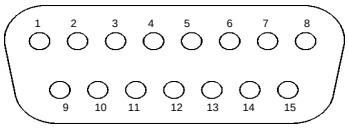

15 pin D-subminiature female receptacle

Pin #	Alarm Circuitry	Control Circuitry
1		Reset - connect to OP
2	Relay - Normally Open	
3	Flow LED	
4	Level LED	
5	No connection.	
6	Low Temp LED	
7	High Temp LED	
8	Fill Signal	
9	Op	
10	Not Used	
11	Relay - Normally Closed	
12	Status	
13	Not Used	
14	-5VDC	
15	Fault LED	

Remote Connector Circuitry Details (2RECP)

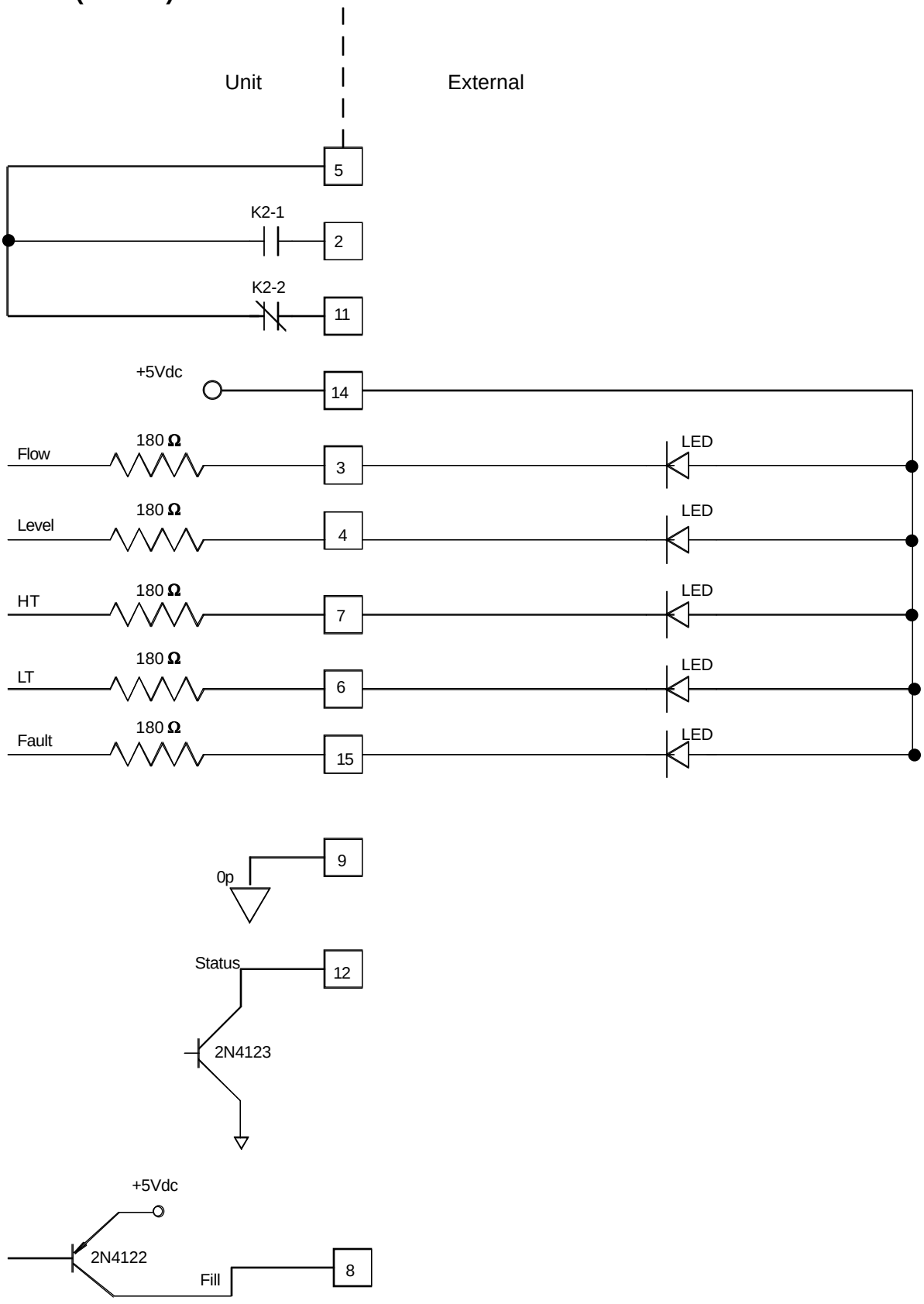

Control Connector Circuitry Details (3RECP)

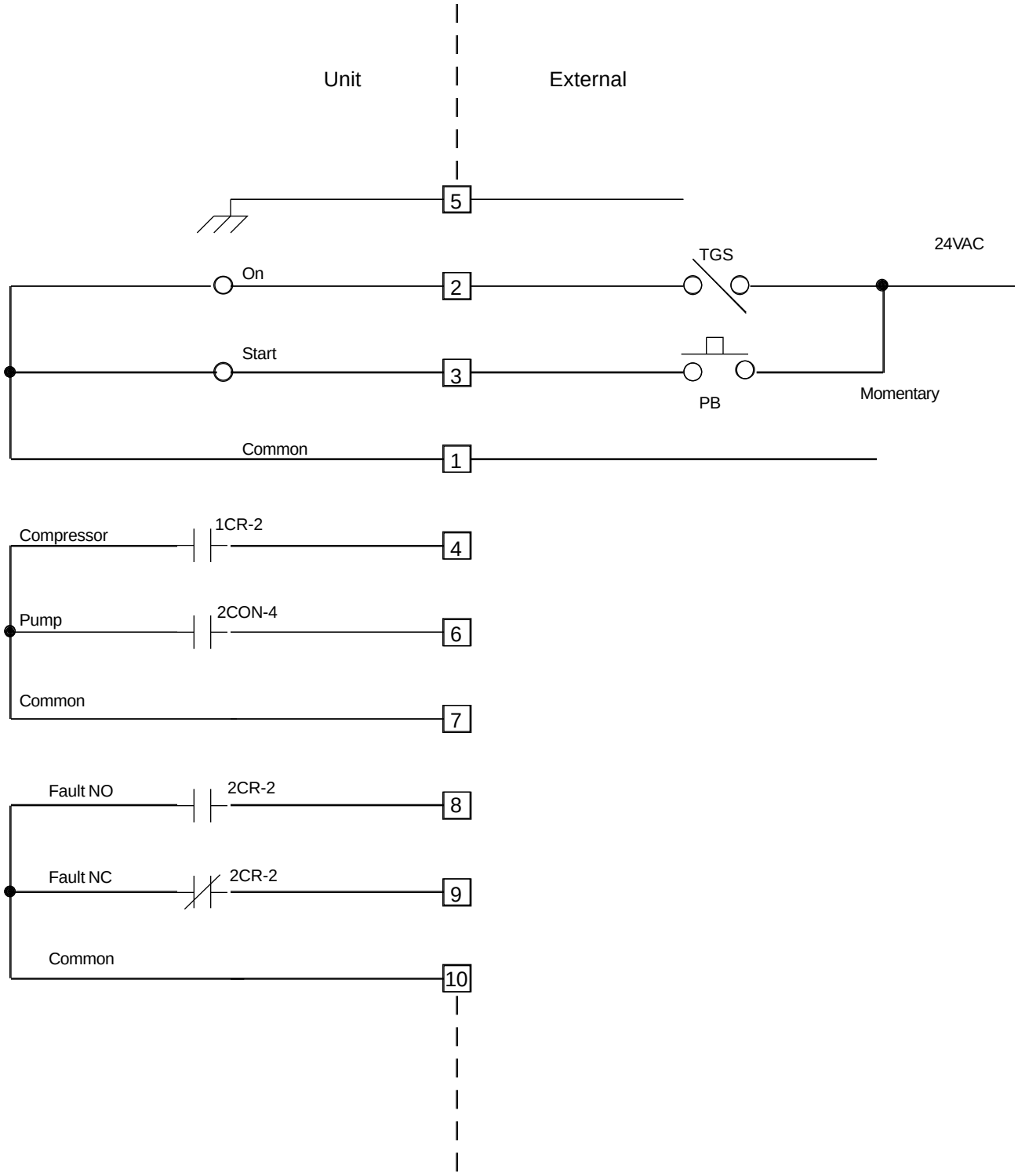

Shorting Plug Positions

Disconnect the unit from the main power source before repositioning any shorting plugs.

The Temperature Controller circuit board has shorting plugs used to modify the unit's operation. The circuit board is located behind the Temperature Controller face panel. You gain access to the circuit board by removing the two screws at the top of the panel and then carefully lowering the face of the panel. The plugs are directly behind the TEMP°C LEDs.

The figures below represent a typical 9-pin header plug. Use the following table to position the shorting plugs for the desired performance. (The pins on the circuit board are labeled.)

Position	Performance
A	LED displays tenths of degrees.
B	LED displays degrees.
C	Decimal point displayed.
D	Decimal point off.
E	Idle indicator reflects heater duty cycle.
F	Idle indicator reflects status of hot gas bypass mode.

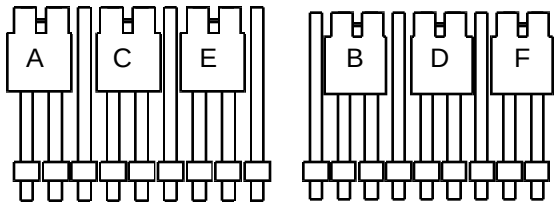

Typical 9-Pin Header Plugs

The DL+A option contains some additional shorting plugs on the alarm portion of the Temperature Controller circuit board. There are three plugs on the top front of the circuit board. (The pins are not labelled. Viewing from the top, A is the full left position.)

Position	Performance
A	Alarm annunciator on.
B	Alarm annunciator off.
C	Amber fault indicator stays lit if fault clears before preset time delay.
D	Amber fault indicator extinguishes if fault clears before preset time delay.
E	Run to fail mode disengaged.
F	Run to fail mode engaged.

There are four additional shorting plugs on the back of the alarm circuit board. Three are located in the lower left hand corner, one in the upper right hand corner between two potentiometers. (The pins are not labelled. Viewing from the side, A is the top position.)

Position	Performance
A	Low flow fault disengaged.
B	Low flow fault engaged.
C	Low level indicator disengaged.
D	Low level indicator engaged.
E	Low level fault disengaged.
F	Low level fault engaged.

The single plug between the potentiometers is used to calibrate the High/Low Temp Limits display. Repositioning the plug allows you to use the Temp°C LED when you calibrated the temp limit potentiometers, see Potentiometer Adjustments/Calibration on the next page

Potentiometer Adjustments/ Calibration

TEMP °C Display

There are six potentiometers at the top of the Temperature Controller circuit board. Pots #1 and #2 are used to calibrate the temperature sensor. You can use the unit's reservoir to calibrate the sensor, or you can remove the sensor from the unit and immerse it in an external container of temperature controlled fluid.

Place a reference thermometer in the fluid and set the setpoint for 0°C. When the fluid approaches the setpoint, as measured by the reference thermometer, adjust pot #1 until the display equals the reference thermometer.

Reset the setpoint for 20°C. When the fluid approaches the setpoint, as measured by the reference thermometer, adjust pot #2 until the display equals the reference thermometer.

To complete the calibration reset the setpoint to 0°C. When the fluid approaches the setpoint adjust pot #1 until the display equals the reference thermometer.

Potentiometers #3 and #4 are used to set the maximum and minimum setpoint readings on the TEMP°C LED.

To set the maximum reading, turn the ADJUST dial fully *clockwise*, then depress and hold the SETPOINT switch. Adjust pot #3 until the desired temperature is displayed.

To set the minimum reading, turn the ADJUST dial fully *counter clockwise*, then depress and hold the SETPOINT switch. Adjust pot #4 until the desired temperature is displayed.

Potentiometers #7 and #6 are factory preset and require no adjustment.

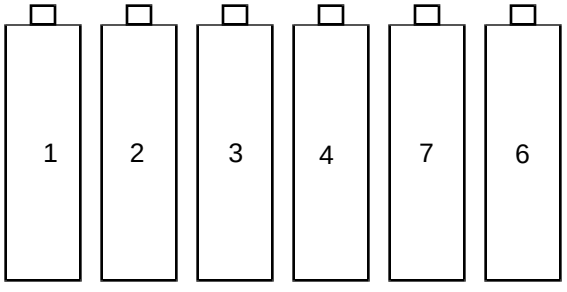

TEMP°C LED Potentiometers

Alarm Calibration

The DL+A option has two potentiometers and a shorting plug are located on the back side of the alarm circuit board. They are used to calibrate the alarm temperature sensor. Again you can use the unit's reservoir, or you can remove the sensor and immerse it in an external container of temperature controlled fluid. Reposition the shorting plug as shown below. Place a reference thermometer in the fluid and set the setpoint for 0°C. When the fluid approaches the setpoint, as measured by the reference thermometer, adjust pot #1 until the display equals the reference thermometer.

Reset the setpoint for 20°C. When the fluid approaches the setpoint, as measured by the reference thermometer, adjust pot #2 until the display equals the reference thermometer.

To complete the calibration reset the setpoint to 0°C. When the fluid approaches the setpoint adjust pot #1 until the display equals the reference thermometer. Reposition the shorting plug to its original position.

Potentiometers #3 is used to adjust the proteud threshold. Potentiometer #4 adjusts the time for the fault delay.

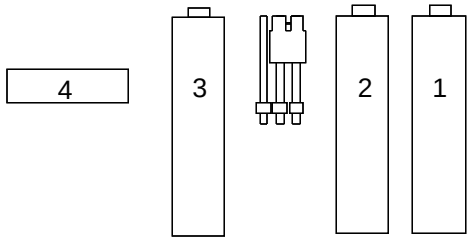

DL+A Potentiometers

Section VI Maintenance

Service Contracts

NESLAB offers on-site Service Contracts that are designed to provide extended life and minimal down-time for your unit. For more information, contact our Service Department (see Preface, After-sale Support).

Condenser Cleaning (Air-cooled units only)

For proper operation, the unit needs to pull substantial amounts of air through a finned condenser. A build up of dust or debris on the fins of the condenser will lead to a loss of cooling capacity.

The frequency of cleaning depends on the operating environment. It is recommended that a visual inspection of the condenser be made monthly after initial installation. After several months, the frequency of cleaning will be established.



Exercise caution not to damage the condenser fins or coil. Condenser fin or coil damage can result in a loss of performance and, in extreme cases, refrigeration system failure.

Algae

To restrict the growth of algae in the fluid reservoir, it is recommended that the reservoir cover be kept in place and that all recirculation lines be opaque. This will eliminate the entrance of light which is required for the growth of most common algae.

NESLAB recommends the use of Chloramine-T, one gram per gallon.

Section VII Service

For personal safety and equipment reliability, the following procedure should only be performed by a qualified technician. Contact our Service Department for assistance (see Preface, After-sale Support).

Configuration

Service Access Panels

Five service access panels (two on the rear, two on the right side and one on the top) allow easy access to the pump and refrigeration assemblies. The panels on the right side are designed to allow removal without disconnecting the HX from the instrument being cooled.

Disconnect the unit from its power source before removing any of the access panels.

Reservoir Cover

Access to the inside of the fluid reservoir is necessary to clean the reservoir.

Disconnect the unit from its power source before removing the reservoir cover.

Remove the top service panel. Screws are located inside the reservoir fill access door, behind the control panel, and on the rear of the unit. The controller panel has one screw on either side (one inside the reservoir fill access door) holding the panel in position.

The reservoir cover has two sections. Remove the screws holding the cover in position as well as the screws holding the two sections together. Lift the front section from the unit. You should now be able to carefully rotate the rear section away from the unit without disconnecting any of the wiring.

Care must be taken not to damage the switches, probes, and stirrer motor blades located under the reservoir cover.

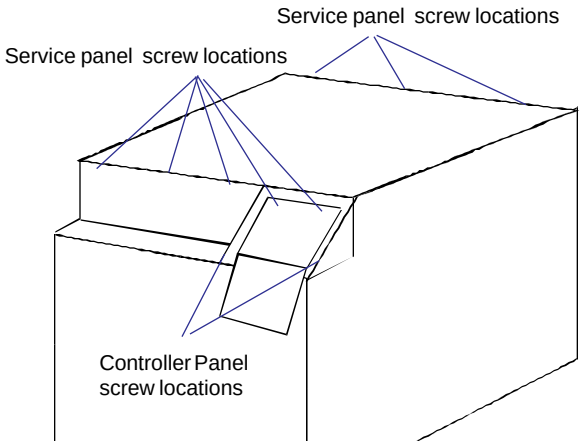

Reservoir Cleaning

Periodic reservoir cleaning is necessary. We recommend that a visual inspection of the reservoir be made monthly after initial installation. After several months, the frequency of cleaning will be established.



Disconnect the unit from its power source and drain the reservoir before cleaning the reservoir.

Remove the top panel. Remove the reservoir cover as described in Configuration. Clean the reservoir with a cleaning fluid compatible with the recirculating system and the cooling fluid.



Do not use steel wool or other abrasive materials. They can scratch the stainless steel surface and initiate rusting.

When the reservoir is clean, reassemble the cover assembly and secure the case top. Refer to Section III, Filling Requirements for instructions on replacing the cooling fluid.

Pump Strainer

Units with PD or TU pumps require pump strainer cleaning. Refer to the pump identification label on the electrical enclosure to identify the specific pump installed in your unit. If debris is drawn into the recirculating system, the pump strainer will prevent the material from being drawn into the pump and damaging the pump vanes.

After initial installation, the strainer may become clogged with debris and scale. Clean the strainer after the first week of installation. After this first cleaning, a monthly visual inspection is recommended. After several months, the frequency of cleaning will be established.



Disconnect the power cord from the power source and drain the fluid reservoir before cleaning the strainer. Do not operate the unit with any strainer removed.

The wire mesh pump strainer is located in the reservoir on the pump suction line. Remove the strainer access cover located on top of the reservoir cover to access the strainer.

Cover the strainer with a plastic bag to help catch any debris which may become free.

Unscrew the strainer and rinse it with water. Replace the strainer. Refer to Section III, Filling Requirements for instructions on replacing the cooling fluid.

Flow Switch Strainer (Optional)

The flow filter strainer is located behind the top right access panel on the inlet side of the flow switch.

Unscrew the locknut and remove the screen. Clean the screen by rinsing it with water.

Replace the strainer and locknut. Refer to Section III, Filling Requirements for instructions on replacing the cooling fluid.

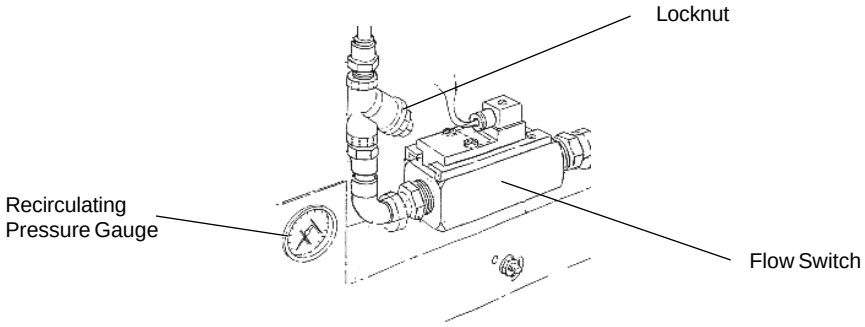

Pump Motor Lubrication

Units with PD pumps require pump motor lubrication. Refer to the pump identification label on the electrical enclosure to identify the specific pump in your unit.

Motors used to drive the pump are manufactured by several companies. These motors use sleeve type bearings with large oil reservoirs. Oiling instructions are generally posted on each motor. In the absence of instructions, add approximately 30 to 35 drops of SAE 20 non-detergent oil in each fill hole on the following schedule (SAE 20 = 142 CS viscosity):

Duty Cycle	Oiling Frequency
Continuous	Once every year
Intermittent	Once every 2 years
Occasional	Once every 5 years

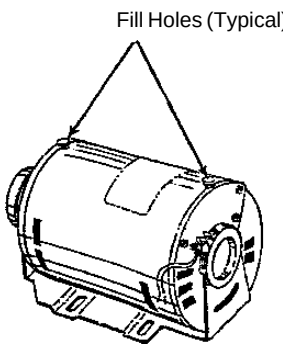

Phase Rotation

Three phase units with three phase pump motors are equipped with a phase rotation interlock. Refer to the serial number label on the electrical enclosure for the specific electrical requirements of your unit. The interlock prevents the unit from starting if the phase rotation is wrong. If the unit will not start, see Section IX, Checklist. If the options in the checklist are not applicable, the problem may be phase rotation.

Disconnect the unit from its power source, open the rear panel and locate the junction box. Reverse any two line conductors on the line side of the relay.

Never remove the green ground wire.

Replace the rear panel. Reconnect the unit to its power source. If the unit will not start, contact our Customer Service Department.

Section VIII Troubleshooting

Checklist

Unit will not start

Verify main power circuit is energized. The green Main Power light on the controller panel should be lit when the unit is energized.

On units with DL+I and DL+A options, the flow control valve must be opened slightly to allow fluid to circulate through the flow switch that monitors the flow rate. A flow rate of more than 0.3 gallons per minute (1.0 liters per minute) is necessary. If the flow is completely shut off, or if flow is not adequate, a low flow fault will occur and the unit will not start.

On three phase units with three phase pump motors, the phase rotation may be reversed (see Section VIII, Phase Rotation).

On water-cooled units, ensure the facility water is on and make sure the cooling water supply is connected to the TAP WATER connection, not the DRAIN connection. Check the High Pressure Cutout, it may need to be reset (see Section V, Operation).

Check power source for correct voltage output. Refer to the serial number label on the rear of the unit for the specific electrical requirements of your unit. Power source must be specified voltage, ±10%.

Unit will not circulate fluid

Check the tubing between the unit and your application for obstructions or for cleaning/replacement.

Units with PD and TU type pumps may require pump strainer cleaning. Refer to the pump identification label on the electrical enclosure to identify the specific pump in your unit. For instructions on cleaning the pump strainer, see Section VIII, Pump Strainer.

On units with CP type pumps, if the back pressure of the instrument being cooled is greater than the maximum pressure of the pump, adequate flow may not be obtained. Check for obstructions in the tubing.

Inadequate temperature control

Make sure the installation of the unit is in compliance with the conditions described in Section III.

Make sure the heat load of the instrument being cooled is not greater than the cooling capacity of the unit.

Service Assistance

If, after following these troubleshooting steps, your unit fails to operate properly, contact our Service Department for assistance (see Preface, After-sale Support). Before calling, please obtain the following information:

- BOM number
- Serial number

Section IX Diagrams

Refrigeration Flow Diagram

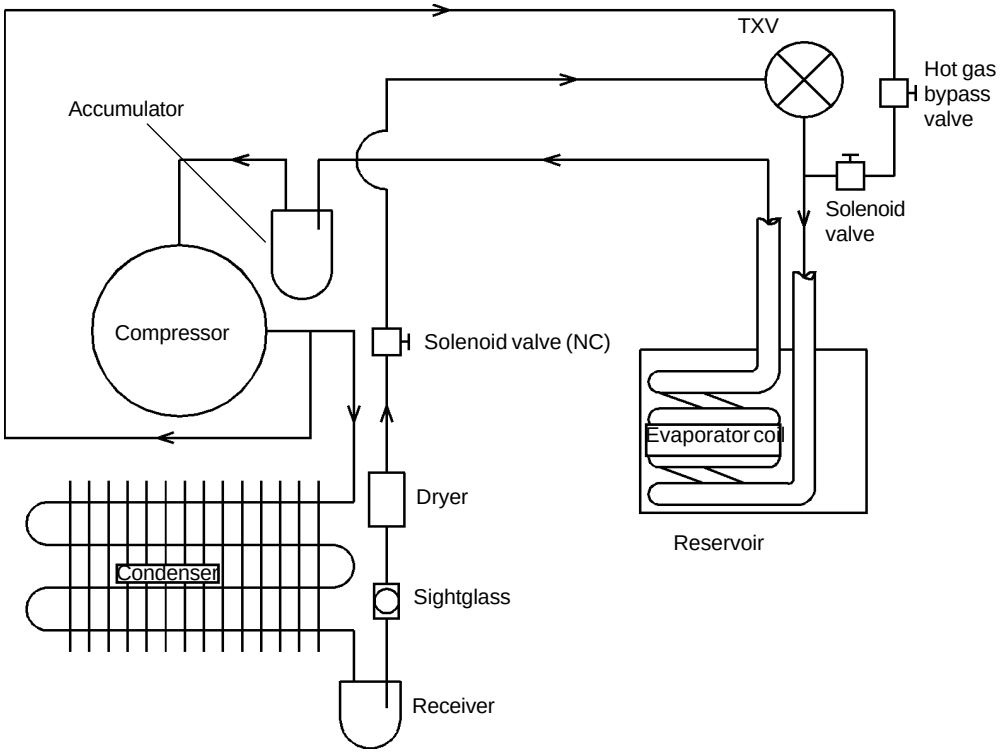

Pump Flow Diagram (CP Pumps)

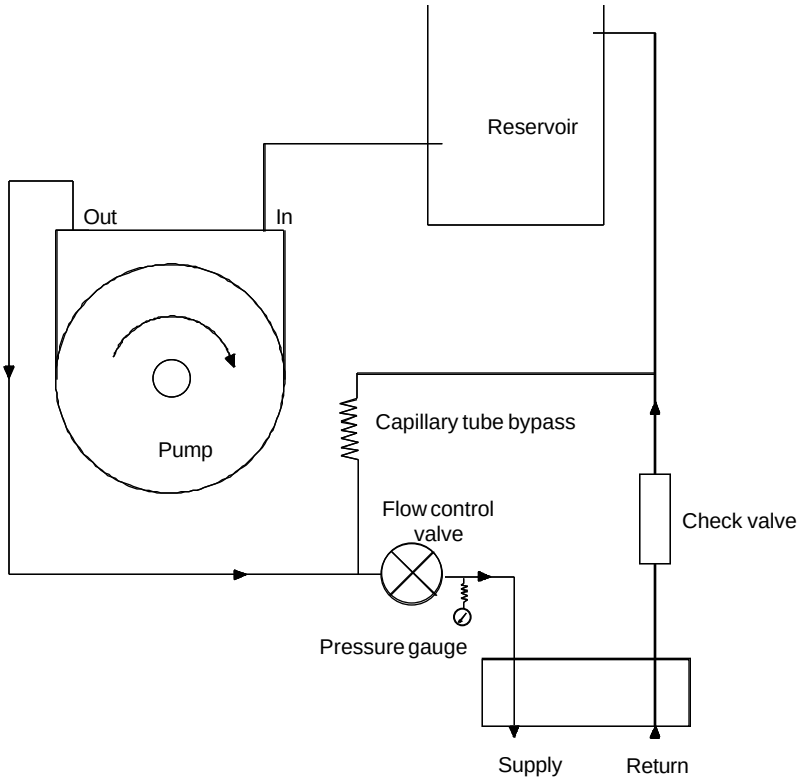

Pump Flow Diagram (PD and TU Pumps)

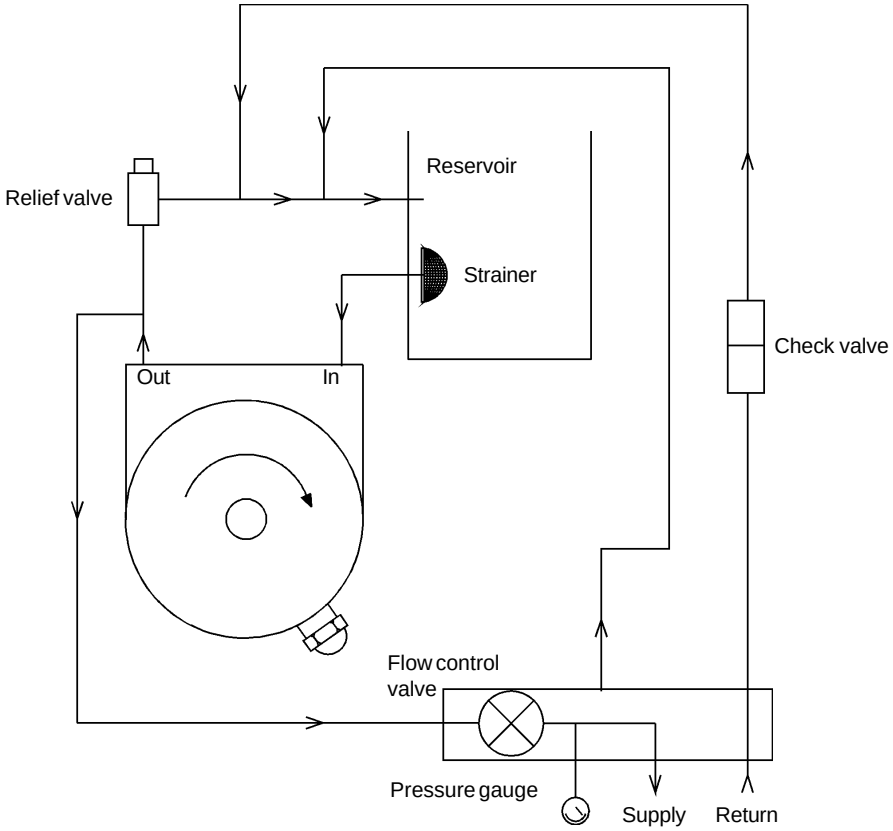

Appendix DeltaTemp

DeltaTemp programming software is now available for free download from NESLAB ONLINE BBS (Bulletin Board System) at 603-427-2490.

DeltaTemp software allows you to write custom temperature programs for NESLAB digital units (any unit with a digital temperature readout AND a 10-15 pin INTERFACE port). The menu-driven program provides a table format for entering temperature parameters and a visual graph confirmation of the program you have designed. Program time can range from 0 to 999 minutes with unlimited looping. Choose upper and lower temperature limits and monitor system status with an audible alarm. DeltaTemp can also record your results on a printed graph or file. DeltaTemp is a DOS program, and requires an IBM or 100% compatible computer.

DeltaTemp may require use of a computer interface device, depending on which NESLAB unit is being used. Refer to the setup diagram in the DeltaTemp folder for full details.

To download the software, go to: CONFERENCES / SOFTWARE / DeltaTemp.

The folder also contains the operating manual, setup diagrams, application notes, and directions on making your own interface cable.

NESLAB ONLINE is a FirstClass® system accessible by general terminal software (Windows Terminal accessory, ClarisWorks Communications, Z-Term, Pro-Comm, or similar).

To use the full graphics and features of the BBS we recommend using FirstClass® Client software. FirstClass® Client is available for Macintosh or Windows platforms. It is available from many sources:

NESLAB ONLINE
Mac: Conferences/Software/Macintosh
Windows: Conferences/Software/Windows

AMERICA ONLINE
Mac: Computing/software center/mac communications forum/industry connection/softarc
Windows: Computing/software center/communications programs

COMPUSERVE:
Mac: TWEUROPA/Teletools/FCMAC.ZIP
Windows: PCBBS/BBS programs/FC300.EXE

WORLD WIDE WEB
http://www.softarc.com/try.htm

WARRANTY

NESLAB Instruments, Inc. warrants for 12 months from date of shipment any NESLAB unit according to the following terms.

Any part of the unit manufactured or supplied by NESLAB and found in the reasonable judgment of NESLAB to be defective in material or workmanship will be repaired at an authorized NESLAB Repair Depot without charge for parts or labor. The unit, including any defective part must be returned to an authorized NESLAB Repair Depot within the warranty period. The expense of returning the unit to the authorized NESLAB Repair Depot for warranty service will be paid for by the buyer. NESLAB's responsibility in respect to warranty claims is limited to performing the required repairs or replacements, and no claim of breach of warranty shall be cause for cancellation or recision of the contract of sales of any unit.With respect to units that qualify for field service repairs, NESLAB's responsibility is limited to the component parts necessary for the repair and the labor that is required on site to perform the repair. Any travel labor or mileage charges are the financial responsibility of the buyer.

The buyer shall be responsible for any evaluation or warranty service call (including labor charges) if no defects are found with the NESLAB product.

This warranty does not cover any unit that has been subject to misuse, neglect, or accident. This warranty does not apply to any damage to the unit that is the result of improper installation or maintenance, or to any unit that has been operated or maintained in any way contrary to the operating or maintenance instructions specified in NESLAB's Instruction and Operation Manual. This warranty does not cover any unit that has been altered or modified so as to change its intended use.

In addition, this warranty does not extend to repairs made by the use of parts, accessories, or fluids which are either incompatible with the unit or adversely affect its operation, performance, or durability.

NESLAB reserves the right to change or improve the design of any unit without assuming any obligation to modify any unit previously manufactured.

THE FOREGOING EXPRESS WARRANTY IS IN LIEU OF ALL OTHER WARRANTIES, EXPRESSED OR IMPLIED, INCLUDING BUT NOT LIMITED TO WARRANTIES OR MERCHANTABILITY AND FITNESS FOR A PARTICULAR PURPOSE.

NESLAB'S OBLIGATION UNDER THIS WARRANTY IS STRICTLY AND EXCLUSIVELY LIMITED TO THE REPAIR OR REPLACEMENT OF DEFECTIVE COMPONENT PARTS AND NESLAB DOES NOT ASSUME OR AUTHORIZE ANYONE TO ASSUME FOR IT ANY OTHER OBLIGATION.

NESLAB ASSUMES NO RESPONSIBILITY FOR INCIDENTAL, CONSEQUENTIAL, OR OTHER DAMAGES INCLUDING, BUT NOT LIMITED TO LOSS OR DAMAGE TO PROPERTY, LOSS OF PROFITS OR REVENUE, LOSS OF THE UNIT, LOSS OF TIME, OR INCONVENIENCE.

This warranty applies to units sold in the United States. Any units sold elsewhere are warranted by the affiliated marketing company of NESLAB Instruments, Inc. This warranty and all matters arising pursuant to it shall be governed by the law of the State of New Hampshire, United States. All legal actions brought in relation hereto shall be filed in the appropriate state or federal courts in New Hampshire, unless waived by NESLAB.

IBC-4, PBC-2, PBC-75
Portable Bath Coolers

Thermo NESLAB Manual P/N 013526
Rev. 12/21/99

Instruction and Operation Manual

Portable Bath Coolers
Instruction and Operation Manual

Table of Contents

PREFACE

Compliance 2
Unpacking 2
Warranty 2
NES-care 2
After-sale Support 2

SECTION I
Safety

Warnings 3

SECTION II
General Information

Description 4
Specifications 4

SECTION III
Installation

Site 5
Electrical Requirements 5
Fluids 5
Cooling Probes 6

SECTION IV
Operation

Operation 7
Temperature Adjustment 7

SECTION V
Maintenance

Service Contracts 8
Cleaning 8
Cooling Fluid 8

SECTION VI
Troubleshooting

Checklist 9
Service Assistance 9
Technical Support 9

SECTION VII
Warranty 10

Preface

Compliance

Products tested and found to be in compliance with the requirements defined in the EMC standards defined by 89/336/EEC as well as Low Voltage Directive (LVD) 73/23/EEC can be identified by the CE label on the rear of the unit. This label indicates testing has demonstrated compliance with the following directives:

LVD, 73/23/EEC	Complies with UL 3101-1:93
EMC, 89/336/EEC	EN 55011, Class A Verification EN 50082-1:1992 IEC 1000-4-2:1995 IEC 1000-4-3:1994 IEC 1000-4-4:1995

For any additional information refer to the Letter of Compliance that shipped with the unit (Declaration of Conformity).

Unpacking

Retain all cartons and packing material until the unit is operated and found to be in good condition. If the unit shows external or internal damage, or does not operate properly, contact the transportation company and file a damage claim. Under ICC regulations, this is your responsibility.

Warranty

Units have a warranty against defective parts and workmanship for one full year from date of shipment. See back page for more details.

NES-care Extended Warranty Contract

- Extend parts and labor coverage for an additional year.
- Worry-free operation.
- Control service costs.
- Eliminate the need to generate repair orders.
- No unexpected repair costs.

Other contract options are available. Please contact us for more information.

After-sale Support

Thermo NESLAB is committed to customer service both during and after the sale. If you have questions concerning the operation of your unit, contact our Sales Department. If your unit fails to operate properly, or if you have questions concerning spare parts or Service Contracts, contact our Customer Service

Department. Before calling, please obtain the following information from the unit's serial number label:

- BOM number _____

- Serial number _____

Section I Safety

Warnings

Make sure you read and understand all instructions and safety precautions listed in this manual before installing or operating your unit. If you have any questions concerning the operation of your unit or the information in this manual, contact our Sales Department (see After-sale Support).

Performance of installation, operation, or maintenance procedures other than those described in this manual may result in a hazardous situation and may void the manufacturer's warranty.

Transport the unit with care. Sudden jolts or drops can damage the refrigeration lines.

Observe all warning labels.

Never remove warning labels.

Never operate damaged equipment.

Always turn off the unit and disconnect the line cord from the power source before performing any service or maintenance procedures.

Never operate equipment with damaged line cords.

Refer service and repairs to a qualified Thermo NESLAB technician.

Section II General Information

Description

The Portable Bath Coolers are designed to provide a refrigeration source for sub-ambient work in liquid baths. The PBC Coolers use mechanical refrigeration systems with full hermetic refrigeration compressors. On all models an insulated coaxial hose assembly is used to carry refrigerant to the nickel plated bronze cooling probe.

	IBC-4	PBC-2	PBC-75
Temperature Range	-25°C to +40°C		
Cooling Capacity[1] *Watts*	400 at +20°C	1000 at +20°C	1550 at +20°C
Hose Dimensions (Length x Diameter) *Inches* *Centimeters*	 42 x 1 106.7 x 2.5	 54 x 1¾ 137.2 x 4.4	 54 x 1¾ 137.2 x 4.4
Probe Dimensions (Length x Diameter) *Inches* *Centimeters*	 4 3/8 x 2 11.1 x 5.1	 7¾ x 1¾ 19.7 x 4.4	 12 x 1¾ 30.5 x 4.4
Unit Dimensions (H x W x D) *Inches* *Centimeters*	 13 9/16 x 8¼ x 11½ 34.4 x 20.9 x 29.2	 14½ x 15 x 21 36.8 x 38.1 x 53.3	 16½ x 17¼ x 22½ 41.9 x 43.8 x 57.2
Weight *Pounds* *Kilogram*	 42 19	 125 57	 150 68

1. 60 Hertz units, reduce capacity 17% for 50 Hertz units. Specifications obtained in a 2 liter container using cooling fluid with specific heat of 0.5 at 20°C ambient. Specifications subject to change.

Section III Installation

Site

The unit should be located in a laboratory or clean industrial environment where ambient temperatures are inside the range of +55°F to +95°F (+13°C to +35°C).



Never place the unit in a location where excessive heat, moisture, or corrosive materials are present.

The unit has an air-cooled refrigeration system. The unit must be positioned so the intake and discharge are not impeded. Inadequate ventilation will cause a reduction in cooling capacity and, in extreme cases, compressor failure.

Excessively dusty areas should be avoided and a periodic cleaning schedule should be instituted (see Section V, Cleaning).

The unit will retain its full rated capacity in ambient temperatures up to approximately +75°F (+24°C). Above +75°F, reduce the cooling capacity 1% for every 1°F above +75°F, up to a maximum ambient temperature of +95°F. In terms of Celsius, reduce the cooling capacity 1% for every 0.5°C above +24°C, up to a maximum ambient temperature of +35°C.

Electrical Requirements

Refer to the serial number label on the rear of the unit for the specific electrical requirements of your unit.

Ensure the voltage of the power source meets the specified voltage, ±10%.



Make sure an adequate ground connection is provided.

Fluids

The cooling probe is bronze with a nickel platting and should not be immersed in a bath fluid that will damage the probe. The selected fluid must have a viscosity of 50 centistokes or less at the lowest operating temperature.



Never use flammable or corrosive fluids with this unit.

Above +8°C, filtered tap water is the recommended fluid. Below +8°C, a non-freezing solution is required.

Cooling Probes

Place the cooling probe in the work area. For maximum cooling efficiency, the probe should be fully immersed in the fluid and should be located as close as possible to the agitator or stirrer motor (if so equipped).

Figure A shows the preferred probe placement. Do not operate the probe as shown in Figure B for extended periods of time, doing so will damage the compressor.

Care should be taken not to stretch or bend the probe beyond it limits. Bend the probe only at room temperatures. The bath coolers are not designed to cool hot fluids directly. The cooling probe should not be subjected to temperatures above 70°C.

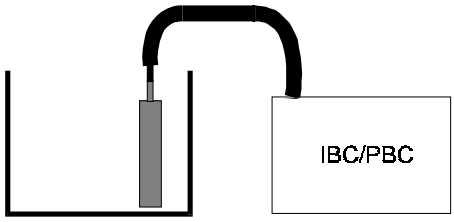

Figure A

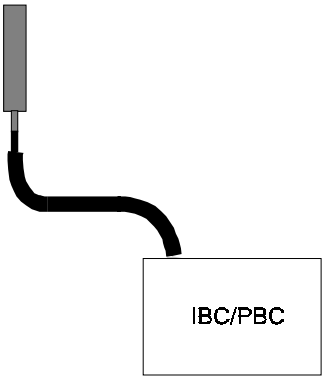

Figure B

Section IV Operation

Operation

Before starting the unit, double check all electrical connections and make sure the cooling probe is properly immersed in the work area.

The IBC-4 is operated by a single power switch and one cooling rate. A green light on the switch indicates power to the unit.

The PBC-2 and the PBC-75 have two switches, one for power to the compressor and the other for selection to two cooling rates. The position marked "MAX" is for maximum cooling capacity down to approximately 0°C. The position marked "MIN" is for operating below 0°C and for maintaining temperature constancy in baths with low heat loads. The red indicator light in the switch is on in the "MAX" position and off in the "MIN" position.

When the unit is shut off, wait approximately ten minutes before restarting. This allows time for the refrigeration pressures to equalize. If the pressures are not allowed to equalize, the compressor will short-cycle (clicking sound) and no cooling will occur.

Temperature Adjustment

Once the bath cooler is switched on and is in full operation, it will reduce the temperature of the heat transfer fluid to the lowest achievable under existing load conditions. If temperature control is desired, a Cryotrol Temperature Controller is required. Refer to the Cryotrol Temperature Controller Instruction and Operation Manual for installation and operation instructions.

When maximum efficiency and temperature uniformity under load is desired, the vessel will show some temperature layering with the coldest, most dense zone at the bottom. We suggest that a small slow speed stirrer be used for agitation. This is extremely important when the cooler and Cryotrol are used.

Older Cryotrols are equipped with a round 8 pin connector. If you wish to connect your older Cryotrol unit to the bath cooler, an adapter cable is available from Thermo NESLAB. Contact our Customer Service Department for more information (see Preface, After-Sale Support).

Section V Maintenance

Service Contracts

Thermo NESLAB offers on-site Service Contracts that are designed to provide extended life and minimal downtime for your unit. For more information, contact our Customer Service Department (see Preface, After-sale Support).

Cleaning

For proper operation, the unit needs to pull substantial amounts of air through the condenser. A build up of dust or debris on the fins of the condenser will lead to a loss of cooling capacity.

Periodic vacuuming of the condenser fins is necessary. The frequency of cleaning depends on the operating environment. After initial installation we recommend a monthly visual inspection of the condenser. After several months, the cleaning frequency will be established.

Cooling Fluid

The cooling fluid in the work area should be periodically replaced when operating at low temperatures. At low temperatures, the cooling fluid may collect water vapor from the air. As the concentration of water in the cooling fluid increases, performance is adversely affected.

Section VI Troubleshooting

Checklist

Unit will not start.
Make sure the voltage of the power source meets the specified voltage, . ±10%. Refer to the serial number label on the rear of the unit for the specific electrical requirements of your unit.

Loss of cooling capacity.
Make sure the heat load in the work area is not greater than the cooling capacity of the unit. Refer to Section II, Specifications to review the cooling capacity specifications.

Check for ice build up on the cooling probe. A layer of ice will act as insulation and reduce the cooling capacity. Ice build up is often an indication that the cooling fluid needs replacing. Defrost the cooling probe and change the cooling fluid.

When the unit is shut off, wait approximately ten minutes before restarting. This allows time for the refrigeration pressures to equalize. If the pressures are not allowed to equalize, the compressor will short-cycle.

Service Assistance

If, after following these troubleshooting steps, your unit fails to operate properly, contact our Service Department for assistance (see Preface,

After-sale Support). Before calling, please obtain the following information:

Part number
Serial number
Voltage of unit
Voltage of power source

Technical Support

Our Service Department can provide you with a complete list of spare parts for your unit (see Preface, After-sale Support). Before calling, please obtain the following information:

Part number
Serial number

WARRANTY

Thermo NESLAB Instruments, Inc. warrants for 12 months from date of shipment any Thermo NESLAB unit according to the following terms.

Any part of the unit manufactured or supplied by Thermo NESLAB and found in the reasonable judgment of Thermo NESLAB to be defective in material or workmanship will be repaired at an authorized Thermo NESLAB Repair Depot without charge for parts or labor. The unit, including any defective part must be returned to an authorized Thermo NESLAB Repair Depot within the warranty period. The expense of returning the unit to the authorized Thermo NESLAB Repair Depot for warranty service will be paid for by the buyer. Thermo NESLAB's responsibility in respect to warranty claims is limited to performing the required repairs or replacements, and no claim of breach of warranty shall be cause for cancellation or recision of the contract of sales of any unit.With respect to units that qualify for field service repairs, Thermo NESLAB's responsibility is limited to the component parts necessary for the repair and the labor that is required on site to perform the repair. Any travel labor or mileage charges are the financial responsibility of the buyer.

The buyer shall be responsible for any evaluation or warranty service call (including labor charges) if no defects are found with the Thermo NESLAB product.

This warranty does not cover any unit that has been subject to misuse, neglect, or accident. This warranty does not apply to any damage to the unit that is the result of improper installation or maintenance, or to any unit that has been operated or maintained in any way contrary to the operating or maintenance instructions specified in Thermo NESLAB's Instruction and Operation Manual. This warranty does not cover any unit that has been altered or modified so as to change its intended use.

In addition, this warranty does not extend to repairs made by the use of parts, accessories, or fluids which are either incompatible with the unit or adversely affect its operation, performance, or durability.

Thermo NESLAB reserves the right to change or improve the design of any unit without assuming any obligation to modify any unit previously manufactured.

THE FOREGOING EXPRESS WARRANTY IS IN LIEU OF ALL OTHER WARRANTIES, EXPRESSED OR IMPLIED, INCLUDING BUT NOT LIMITED TO WARRANTIES OR MERCHANTABILITY AND FITNESS FOR A PARTICULAR PURPOSE.

Thermo NESLAB'S OBLIGATION UNDER THIS WARRANTY IS STRICTLY AND EXCLUSIVELY LIMITED TO THE REPAIR OR REPLACEMENT OF DEFECTIVE COMPONENT PARTS AND Thermo NESLAB DOES NOT ASSUME OR AUTHORIZE ANYONE TO ASSUME FOR IT ANY OTHER OBLIGATION.

Thermo NESLAB ASSUMES NO RESPONSIBILITY FOR INCIDENTAL, CONSEQUENTIAL, OR OTHER DAMAGES INCLUDING, BUT NOT LIMITED TO LOSS OR DAMAGE TO PROPERTY, LOSS OF PROFITS OR REVENUE, LOSS OF THE UNIT, LOSS OF TIME, OR INCONVENIENCE.

This warranty applies to units sold in the United States. Any units sold elsewhere are warranted by the affiliated marketing company of Thermo NESLAB Instruments, Inc. This warranty and all matters arising pursuant to it shall be governed by the law of the State of New Hampshire, United States. All legal actions brought in relation hereto shall be filed in the appropriate state or federal courts in New Hampshire, unless waived by Thermo NESLAB.

Merlin Recirculating Chillers

ThermoNESLAB Manual P/N U00659
Rev. 11/09/00

Installation
Operation
Basic Service

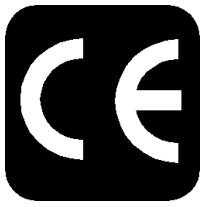

Table of Contents

Preface

Compliance 2
Unpacking 2
Warranty 2
NES-care Extended Warranty Contract 2
After-sale Support 3

Section I Safety

Warnings 4
Additional Warnings 5

Section II General Information

Quick Reference Operating Procedures 7
Description 8
Specifications 8

Section III Installation and Operation

Site 12
Electrical Requirements 13
Plumbing Requirements 14
Fluids 14
Filling Requirements 15
Reservoir Tank Isolation Valves 15
Controller 16
Start Up/Shut Down 18
Setup/Tuning Loop 20

Section IV Options

Communication Connector 21
Remote Start/Stop 22
Reservoir Level Warning/Fault 23
Low Pump Flow Warning/Fault 23
Additional Accessories 23
Error Codes 24

Section V Maintenance and Service

Displaying Software Version Number 25
Cleaning 26
Algae 26
Leaks 27
PD Pressure Relief Valve 27
PD Pump Strainer 28
PD Pump Motor Lubrication 29
BOM Decoder 29

Section VI Troubleshooting

Checklist 30
Service Assistance 31

Appendix A Water Quality Standards and Recommendations
Appendix B RS-232 Serial Communications Protocol
Appendix C RS-485 Serial Communications Protocol
WARRANTY

Preface

Compliance

60 Hertz

CSA-C22.2 No 1010-1

UL-471, and UL-3101-1.

50 Hertz

Products tested and found to be in compliance with the requirements defined in the EMC standards defined by 89/336/EEC as well as Low Voltage Directive (LVD) 73/23/EEC can be identified by the CE label on the rear of the unit. The testing has demonstrated compliance with the following directives:

LVD, 73/23/EEC	Complies with IEC 1010-1:93
EMC, 89/336/EEC	EN 55011, Class A Verification
	EN 50082-1:1992
	IEC 61000-4-2:1999
	IEC 61000-4-3:1998
	IEC 61000-4-4:1995
	IEC 61000-4-5:1995
	IEC 61000-4-6:1996

For any additional information, refer to the Letter of Compliance that shipped with the unit (Declaration of Conformity).

Unpacking

Retain all cartons and packing material until the unit is operated and found to be in good condition. If the unit shows external or internal damage, or does not operate properly, contact the transportation company and file a damage claim. Under ICC regulations, this is your responsibility.

Warranty

Units have a warranty against defective parts and workmanship for 24 months from date of shipment. See back page for more details.

NES-care Extended Warranty Contract

- Extend parts and labor coverage for an additional year.
- Worry-free operation.
- Control service costs.
- Eliminate the need to generate repair orders.
- No unexpected repair costs.

Other contract options are available. Please contact ThermoNESLAB for more information.

After-sale Support

ThermoNESLAB is committed to customer service both during and after the sale. If you have questions concerning the unit operation, contact our Sales Department. If your unit fails to operate properly, or if you have questions concerning spare parts or Service Contracts, contact our Service Department.

Before calling, *please* obtain the following information:

*- unit BOM number*_____

- unit serial number _____

- unit software version _____

- voltage of power source _____

The unit's BOM and serial number label are located on the label rear of the unit. See page 25 for instructions on how to display the software version.



See page 29 for instructions on how to decode your unit's BOM number.

Section I Safety

Warnings



Warnings are posted throughout the manual. These warnings are designated by an exclamation mark inside an equilateral triangle and text highlighted in bold. Read and follow these important instructions. Failure to observe these instructions can result in permanent damage to the unit, significant property damage, or personal injury or death.



The lightning flash with arrow symbol, within an equilateral triangle, is intended to alert the user to the presence of non-insulated "dangerous voltage" within the unit's enclosure. The voltage may be of significant magnitude to constitute a risk of electrical shock.

Make sure you read and understand all instructions and safety precautions listed in this manual before installing or operating your unit. If you have any questions concerning the operation of your unit or the information in this manual, please contact our Sales Department (see After-sale Support).

Never place the unit in a location where excessive heat, moisture, or corrosive materials are present.

The unit construction provides extra protection against the risk of electrical shock by grounding appropriate metal parts. The extra protection may not function unless the power cord is connected to a properly grounded outlet. It is the user's responsibility to assure a proper ground connection is provided.

Never connect the inlet or outlet fitting to your building water supply or any water pressure source.

Never use flammable or corrosive fluids with this unit. Highly distilled and deionized water may be aggressive and cause material corrosion. Please contact ThermoNESLAB before subjecting this unit to prolonged exposure to highly distilled or deionized water.

Do not use automotive antifreeze. Commercial antifreeze contains silicates that can damage the pump seals. Use of automotive antifreeze will void the manufacturer’s warranty.

Additional Warnings

In addition to the specific warnings listed on the previous page the following general warnings apply to your unit:

Performance of installation, operation, or maintenance procedures other than those described in this manual may result in a hazardous situation and may void the manufacturer's warranty.

Transport the unit with care. Sudden jolts or drops can damage the refrigeration lines.

Observe all warning labels.

Never remove warning labels.

Never operate damaged or leaking equipment.

Never operate the unit without cooling fluid in the reservoir.

Always turn off the unit and disconnect the power cord from the power source before performing any service or maintenance procedures, or before moving the unit.

Never operate equipment with damaged power cords.

Refer service and repairs to a qualified technician.

Section II General Information

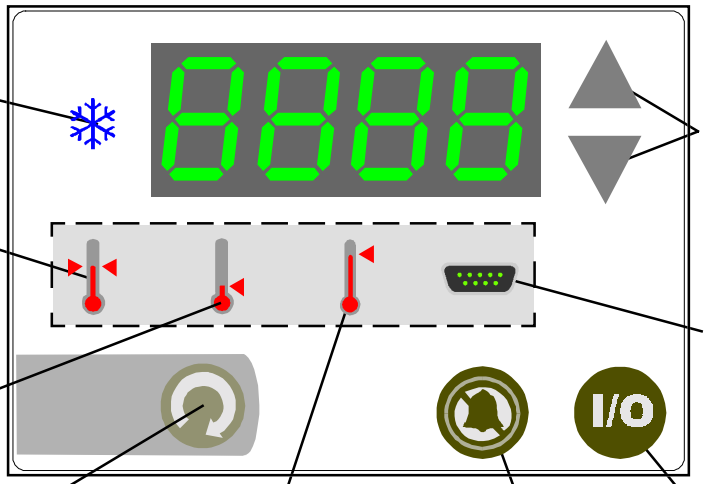

Indicates **refrigeration system status**. See page 16.

Indicates the controller is displaying the **setpoint**. Press the arrow keys to change the value. See page 17.

Indicates the controller is displaying the unit's **low temperature alarm setting**. Press the arrow keys to change the value. See page 17.

Press to **sequence** through the four indicators and accept the displayed value. See page 16. **NOTE:** None of the four indicators are visible unless this key is pressed.

Indicates the controller is displaying the **high temperature alarm setting**. Press the arrow keys to change the value. See page 17.

Press to **mute** the alarm. See page 16.

Press to **start/stop** the unit. See page 16.

Optional. Indicates the unit is operating in the **serial communication** or remote start/stop mode. See page 17.

Press to **change** the displayed value. See page 16.

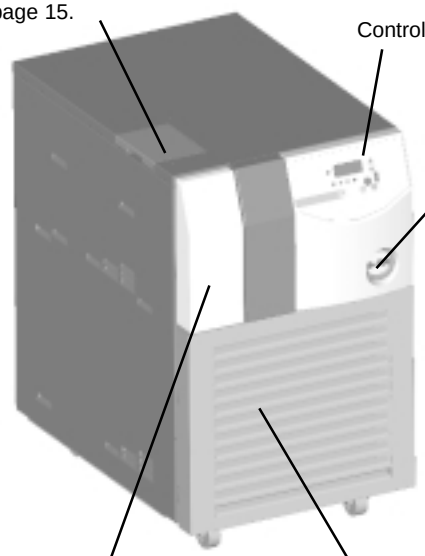

Reservoir Access Panel. See page 15.

Controller. See page 16.

Pressure Gauge. See page 18.

Reservoir. See page 15.

Condenser Access Panel. See page 26.

Indicates a **Merlin Operating Tip**.

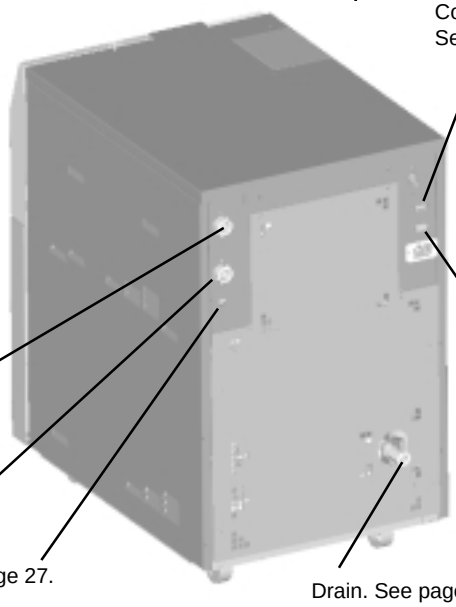

Circuit Breaker. See page 18.

Optional

Communications Connector. See page 21.

Plumbing Return Connection. See page 14.

Plumbing Supply Connection. See page 14.

PD Pump Pressure Relief Valve. See page 27.

Optional

Remote Start/Stop Connector. See page 22.

Drain. See page 14.

Quick Reference Operating Procedures

Installation

The unit has an air-cooled refrigeration system. Air is drawn in the front of the unit and discharged through rear and sides. Position the unit so the intake and discharge are not impeded. Inadequate ventilation will cause a reduction in cooling capacity and, in extreme cases, compressor failure.

Excessively dusty areas should be avoided and a periodic cleaning schedule should be instituted. For proper operation, the unit needs to pull substantial amounts of air through a condenser. A build up of dust or debris on the fins of the condenser will lead to a loss of cooling capacity.

The unit will retain its full rated capacity in ambient temperatures up to approximately +77°F (+25°C).

Make sure the voltage of the power source meets the specified voltage, ±10%.

The plumbing connections are located on the rear of the unit and are labelled and . These connections are ½ inch FPT (¾ inch FPT for units with CP-55 pumps). Remove the plastic protective plugs from both plumbing connections. Connect the fitting to the inlet of your application. Connect the fitting to the outlet of your application.

To fill the reservoir, remove the reservoir access panel and locate the reservoir cap. Remove the cap and fill the reservoir with clean cooling fluid.

For fluid recommendations refer to page 14.

Operation

Before starting the unit, double-check all electrical and plumbing connections. Make sure the circulating system is properly filled with cooling fluid. Place the circuit breaker located on the rear of the unit to the up position.

To start the unit, press I/O. To turn the unit off press I/O again.

The ❄ LED indicates the status of the refrigeration system. It illuminates to indicate the refrigeration system is removing heat from the cooling fluid. As the operating temperature approaches the setpoint, the LED will flash.

Temperature Adjustment

To display the temperature setpoint, press on the controller. The indicator will illuminate and the display will flash the current setpoint value. To adjust the temperature setpoint, press the arrow keys until the desired temperature setpoint is indicated. Press again to confirm the change. The display will rapidly flash the new value for a short time and then return to the recirculating fluid temperature.

Periodic Maintenance

Periodically inspect the reservoir fluid. If cleaning is necessary, flush the reservoir with a cleaning fluid compatible with the circulating system and the cooling fluid.

The cooling fluid should be replaced periodically. Frequency depends on the operating environment and amount of usage.

Before changing the cooling fluid ensure it is at a safe temperature.

Periodic vacuuming of the condenser fins is necessary. The frequency of cleaning depends on the operating environment. We recommend a monthly visual inspection of the condenser after initial installation. After several months, the cleaning frequency will be established.

Units with PD pumps have a strainer. If debris is in the system, the strainer will prevent the material from being drawn into the pump and damaging the pump vanes. A clogged strainer will also cause increased pump discharge pressure.

After initial installation, the strainer may become clogged. **Clean the strainer after the first week of installation.** After this first cleaning, we recommend a monthly visual inspection. After several months, the cleaning frequency will be established. Before cleaning, disconnect the power cord from the power source and drain the unit.

Description

The Merlin Recirculating Chiller is designed to provide a continuous supply of cooling fluid at a constant temperature and volume. The unit consists of an air-cooled refrigeration system, plate heat exchanger, recirculating pump, polyethylene reservoir, and a microprocessor temperature controller.

Throughout the manual, you will be asked to consult the unit's serial number label for specific information. The label is located on the rear of the unit.

Specifications

	M-25	M-33	M-75	M-100	M-150
Temperature Range[1,2]	+5°C to +35°C				
Temperature Stability[1,3,4]	±0.1°C		±0.15°C		
Reservoir Volume					
Gallons	0.5				
Liters	1.9				
Refrigerant[5]	R134a			R404a	

Cooling Capacity (Watts)[1,4]

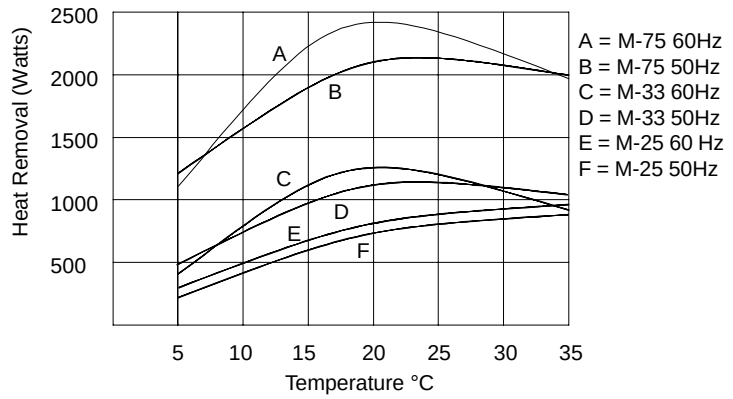

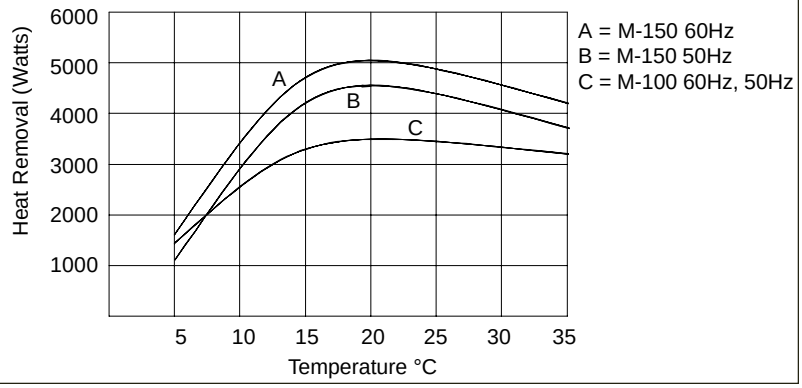

1. Specifications subject to change.
2. Modified temperature ranges to either -15°C or to +90°C are available.
3. At the chiller. Display resolution 1.0°C. 0.1°C display resolution is available using the controller's Setup/Tuning Loop, see page 20.
4. Circulating water at 20°C ambient. Cooling capacity will vary depending on fluid temperature, ambient temperature, and cooling fluid.
5. Standard temperature range units.

Pump Options

Standard temperature range units

Unit	Standard	Optional
M-25	MD-30 or PD-1	None
M-33	MD-30 or PD-1	PD-2
M-75	PD-1	PD-2
M-100	PD-2	CP-55
M-150	PD-2	CP-55

High/Low temperature range units

Unit	Standard	Optional
M-25	PD-1	None
M-33	PD-1	PD-2
M-75	PD-2	None
M-100	PD-2	CP-55
M-150	PD-2	CP-55

Pump Capacity

PD-1, PD-2

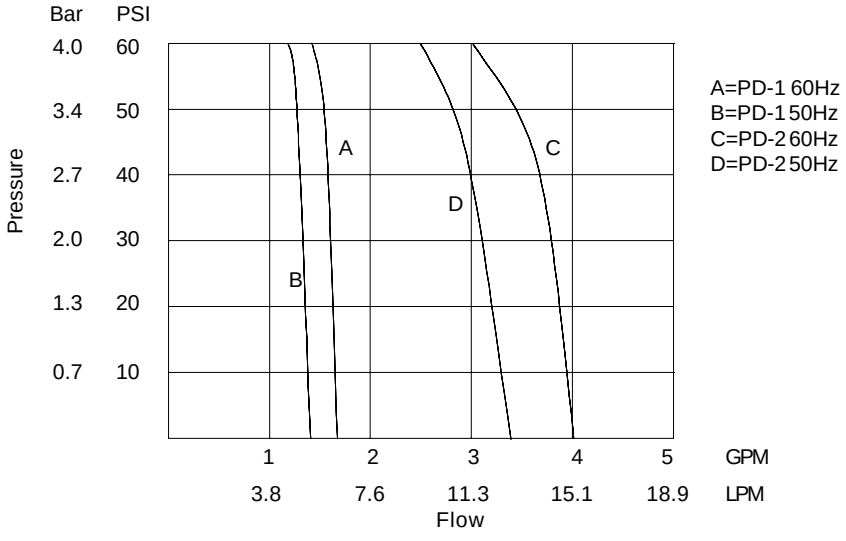

MD-30 (60 Hertz)[1]

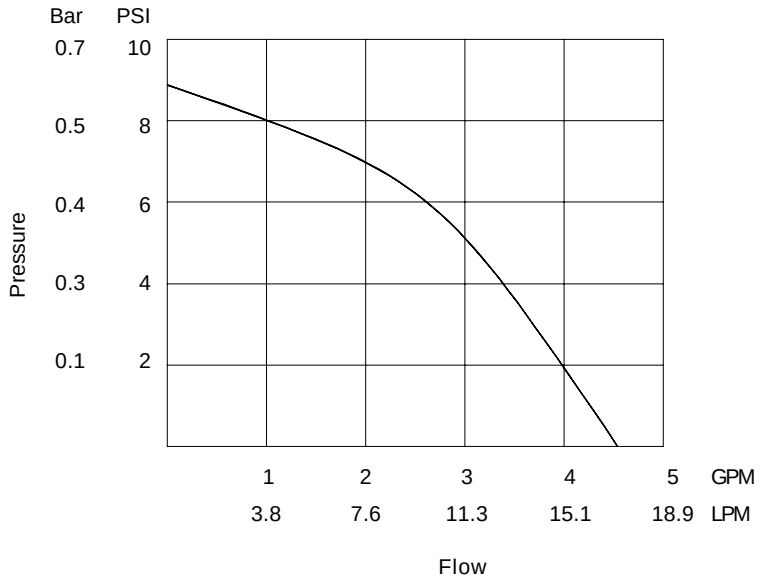

1. The MD-30 is not available for 50 Hertz units.

Unit Dimensions

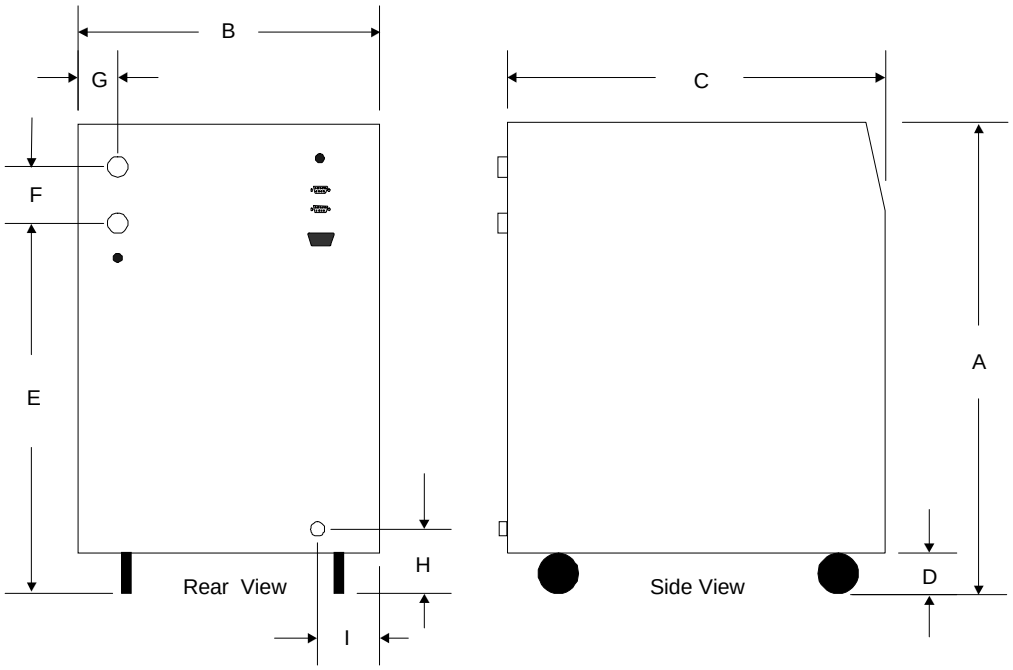

Unit Dimensions	M-25	M-33	M-75	M-100	M-150
Dimension A[1]	23 7/8	23 7/8	26 5/8	30 1/4	30 1/4
Dimension B[1]	12 5/8	12 5/8	16 1/4	21 1/4	21 1/4
Dimension C[1]	20 1/8	20 1/8	23 3/8	28 5/8	28 5/8
Dimension D[2]	2	2	2	3	3
Dimension E[3]	18 7/8	18 7/8	21 1/8	24 3/4	24 3/4
Dimension F[4]	3	3	3	3	3
Dimension G[5]	3/4	3/4	2	1 1/2	1 1/2
Dimension H[6]	4	4	3	7 3/4	7 3/4
Dimension I[7]	4 1/4	4 1/4	3 1/2	5	5
Crate Dimensions (D x W x H)[8]	26x18½x36	26x18½x36	29¼x22¼x39	35¼x27x42	35¼x27x42
Shipping Weight[9]	150	150	200	290	290
Air Intake (ft³/min)[10]	178	178	385	755	755

1. Dimension A is the height of the unit. Units with CP-55 pumps are 6" higher. The unit width and depth (dimensions B and C) are the case dimensions, add approximately 1/2 inch to include the plumbing connections.
2. Dimension D is the distance from the floor to the bottom of the unit case (height of the casters).
3. Dimension E is the distance from the floor to the center of the outlet connection.
4. Dimension F is the distance between the center of the outlet and inlet connections.
5. Dimension G is the distance from the unit's side to the center of the outlet and inlet connections.
6. Dimension H is the distance from the floor to the center of the drain connection.
7. Dimension I is the distance from the unit's side to the center of the drain connection.
8. Crate dimensions for units with CP-55 pumps are 6 inches higher. All packages tested to ISTA 2B.
9. Shipping weight in pounds, ±10 pounds.
10. Air intake for 60 Hz units.

Rev 10/26/00

Section III Installation and Operation

Site

The unit should be located in a clean environment where ambient temperatures are inside the range of 10°C to 35°C (50°F to 94°F).

Never place the unit in a location where excessive heat, moisture, or corrosive materials are present.

The unit has an air-cooled refrigeration system. Air is drawn through the front of the unit and discharged through rear and side panels. The unit must be positioned so the intake and discharge are not impeded. A minimum clearance of 3 feet (1 meter) on all vented sides is necessary for adequate ventilation. Inadequate ventilation will cause a reduction in cooling capacity and, in extreme cases, compressor failure.

Excessively dusty areas should be avoided and a periodic cleaning schedule should be instituted (see Section IV, Maintenance and Service). Optional air filters are available, contact our Service Department. See Preface, After-Sale Support.

The unit will retain its full rated capacity in ambient temperatures up to approximately 25°C (77°F). Reduce the cooling capacity 1% for every 0.5°C (1°F) above 25°C (77°F), up to a maximum ambient temperature of 35°C (94°F).

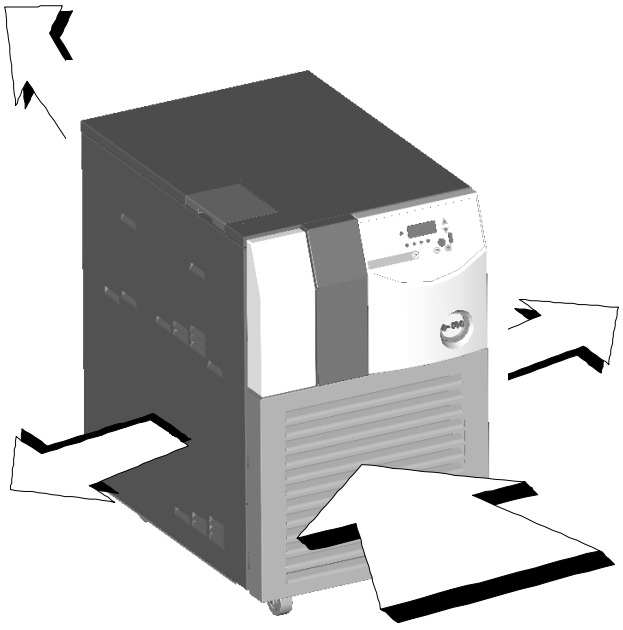

Direction of Air Flow

Electrical Requirements



The unit construction provides extra protection against the risk of electrical shock by grounding appropriate metal parts. The extra protection may not function unless the power cord is connected to a properly grounded outlet. It is the user's responsibility to assure a proper ground connection is provided.

The following power options are available:

Unit	Voltage	Frequency	Phase	Circuit Capacity
M-25	115	60	1	11
	100	50	1	10
	230	50	1	6
M-33	115	60	1	15
	100	50	1	14
	200-230	60	1	7
	200	50	1	8
	230	50	1	8
M-75	200-230	60	1	12
	200	50	1	10
	230	50	1	10
M-100	200-230	60	1	17
	200	50	1	16
	400	50	3/5W	6
M-150	200-230	60	1	20
	200	50	1	19
	400	50	3/5W	7

Amperage based on extreme operating conditions. Operating in a 20°C ambient and at nominal voltage will result in a lower amperage draw.

Refer to the serial number label on the rear of the unit for specific electrical requirements.

Plumbing Requirements

The plumbing connections are located on the rear of the unit and are labelled and . The connections are ½ inch Female Pipe Thread. For units with CP-55 pumps, the connections are ¾ inch Female Pipe Thread. Units with ½ inch fittings are supplied with 3/8 inch and ½ inch barbed adapters, units with ¾ inch fittings are supplied with ½ inch and ¾ inch barbed adapters.

Remove the plastic protective plugs from both plumbing connections. Install the barbed adapters to these connections.

Connect the fitting to the hose feeding the inlet of your application. Connect the fitting to the hose from the outlet of your application. Clamp all connections.

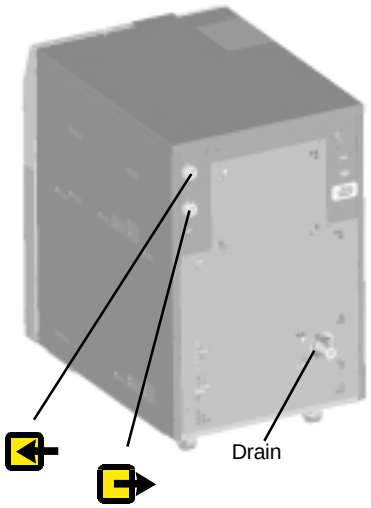

Never connect the fittings to your building water supply or any water pressure source.

NOTE: On units equipped with PD pumps, ensure your plumbing is rated to withstand 85 psi at the highest operating temperature.

It is important to keep the distance between the unit and the instrument being cooled as short as possible. Tubing should be straight and without bends. If diameter reductions must be made, they should be made at the inlet and outlet of your application, not at the chiller.

All units have a ball-valve reservoir drain located on the rear of the unit. Add the desired length of tubing to the drain valve. To help prevent any spillage from your application, consider installing external isolation valves on the supply and return lines.

Fluids

Never use flammable or corrosive fluids with this unit. Do not use automotive antifreeze. Commercial antifreeze contains silicates that can damage the pump seals. Use of automotive antifreeze will void the manufacturer's warranty.

Acceptable fluids and their normal operating temperature ranges are:

- Filtered/Single Distilled water, +5°C to +85°C
- 50/50 Uninhibited Ethylene Glycol/Water, -15°C to +60°C
- 50/50 Inhibited Ethylene Glycol/Water, -15°C to +90°C
- 50/50 Uninhibited Propylene Glycol/Water, -15°C to +60°C
- 50/50 Inhibited Propylene Glycol/Water, -15°C to +90°C
- Deionized water (1 - 3 megohm, compensated), +5°C to +85°C

Refer to Appendix A, Water Quality and Standards, for additional information.

Filling Requirements

The polyethylene reservoir is translucent for easy fluid level monitoring. Remove the reservoir access panel. Locate and remove the reservoir cap. Fill the reservoir with clean cooling fluid, see previous page.

Since the reservoir capacity may be small compared to your application, have extra cooling fluid on hand to keep the system topped off when external circulation is started.

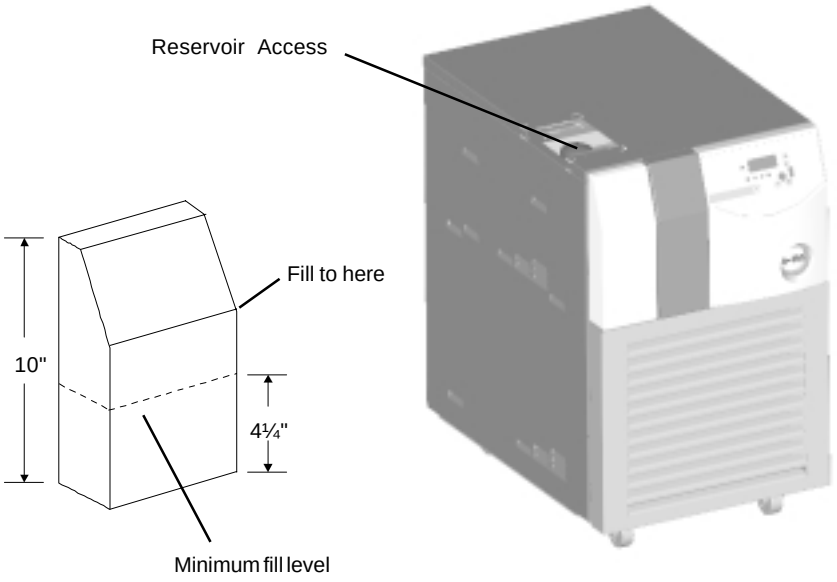

Reservoir Tank Isolation Valves

Units are equipped with two reservoir isolation valves. The valves are used to isolate the tank from the fluid flow to enable circulation to an open system or tank.

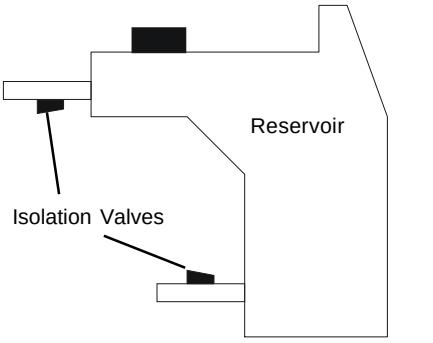

Upper Left Side of Unit, Panel Removed

The units are factory shipped with the valves open for normal operation. If your application requires the process fluid to flow to an open tank above the unit, close the valves to prevent fluid siphoning and reservoir overflow. To close the valves you must remove the top and side access panels.

Ensure the valves are open when circulating to a closed system.

System temperature changes with the isolation valves closed, and while circulating to a closed system, can create a vacuum and/or high pressure conditions.

Controller

The controller controls temperature using a Proportional-Integral-Derivative (PID) algorithm. It is designed with self-diagnostic features and easy to use operator interface.

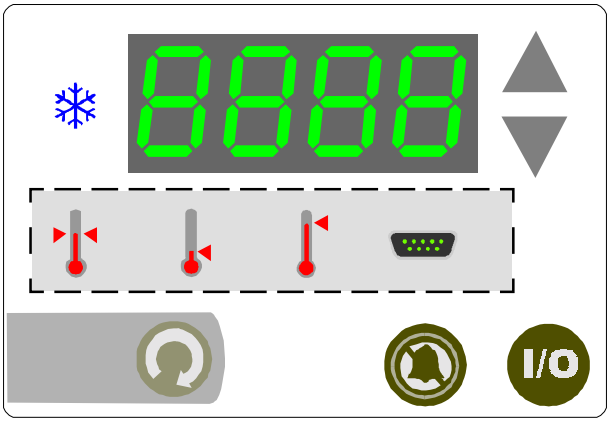

Controller



Use this key to toggle the **unit on or off**.



Use this key to **scroll** through the controller's LEDs. It is also used to accept and save changes.



If the alarm sounds, use this key to toggle the **alarm off and on**.

NOTE: If the cause of the alarm is cleared but then reoccurs, the alarm will sound again.



Use this key to **increment numerical values** when setting values.



Use this key to **decrement numerical values** when setting values.



Indicates **refrigeration system status**. It illuminates to indicate the refrigeration system is removing heat from the cooling fluid. As the operating temperature approaches the temperature setpoint, the LED will flash. The indicator is off when heat is not being removed.

NOTE: The following indications are not visible until  is depressed.

 Indicates the controller is displaying the **setpoint**. Adjust the display value using the arrow keys. If neither arrow key is pressed within 10 seconds the display will return to the recirculating temperature display. Save the change using  .

NOTE: You cannot adjust the setpoint closer than 2°C to either of the temperature limits discussed below. If  is not pressed for 60 seconds the display will return to the recirculating temperature display and ignore any changes.

 Indicates the controller is displaying the **low temperature alarm** setting. The indicator flashes and the alarm sounds if this limit is exceeded. Adjust the display value using the arrow keys. If neither arrow key is pressed within 10 seconds the display will return to the recirculating temperature display. Save the change using  . If  is not pressed for 60 seconds the display will return to the recirculating temperature display and ignore any changes.

 Indicates the controller is displaying the **high temperature alarm** setting. The indicator flashes and the alarm sounds if this limit is exceeded. Adjust the display value using the arrow keys. If neither arrow key is pressed within 10 seconds the display will return to the recirculating temperature display. Save the change using  . If  is not pressed for 60 seconds the display will return to the recirculating temperature display and ignore any changes.

 **(Optional)** Indicates the unit is in the **remote/serial communication** mode of operation. The indicator flashes if the unit is in the remote start/stop mode of operation. Toggle between the local and remote modes using the arrow keys. If neither arrow key is pressed within 10 seconds the display will return to the recirculating temperature display. Save the change using  .

If  is not pressed for 60 seconds the display will return to the recirculating temperature display and ignore any change.

Start Up/Shut Down

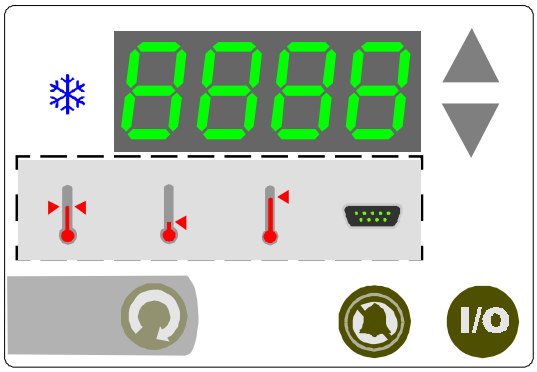

Controller

Pre-Start

Before starting the unit, double check all electrical and plumbing connections. Have extra recirculating fluid on hand.

Circuit Breaker

Place the circuit breaker located on the rear of the unit to the up position, the controller will flash and the alarm will momentarily sound.

The unit has automatic restart. If the unit was shutdown as a result of a power failure and power is restored, it will restart. If it was shut down using the circuit breaker, placing the circuit breaker up will restart the unit.

Starting

Press I/O. The controller will do a self-test (the controller will quickly sequence through its LEDs and momentarily sound the alarm) and then display the recirculating fluid temperature. The refrigeration system and the recirculation pump will then start. The RECIRCULATING PRESSURE gauge will display the pump operating pressure. If the pressure needs adjusting, refer to page 26.

NOTE: If on start up the unit's recirculating fluid is outside either temperature limit, the unit will operate but the appropriate indicator will flash until the fluid is within the limit.

Setpoint

To display/change the setpoint press until illuminates. The display will flash the current setpoint value. Use the arrow keys to change the value.

NOTE: If the arrow keys are not pressed within 10 seconds the display will return to the current reservoir temperature. The controller will not allow you to enter a setpoint closer than 2°C of either temperature alarm setting discussed on the next page. Trying to use a setpoint within 2°C causes the appropriate indicator to flash and sounds the audible alarm twice.

Once the desired setpoint is displayed, press again to confirm the change. The display will rapidly flash the new value for a short period and then return to the recirculating fluid temperature.

NOTE: If the new value is not confirmed within 60 seconds the display will return to the recirculating fluid temperature and ignore any changes.

Low Temp Alarm

To display/change the low temperature alarm setting press until illuminates. The display will flash the current limit value. Use the arrow keys to change the value. The range is 0°C (-15°C for low-temp units) to 30°C.

NOTE: If the arrow keys are not pressed within 10 seconds the display will return to the current reservoir temperature.

Once the desired setting is displayed, press again to confirm the change. The display will rapidly flash the new value for a short period and then return to the recirculating fluid temperature. See Error Codes on page 24.

NOTE: If the new value is not confirmed within 60 seconds the display will return to the recirculating fluid temperature and ignore any changes.

High Temp Alarm

To display/change the high temperature alarm setting press until illuminates. The display will flash the current setting value. Use the arrow keys to change the value. The range is 10°C to 40°C (90°C for high-temp units).

NOTE: If the arrow keys are not pressed within 10 seconds the display will return to the current reservoir temperature.

Once the desired limit is displayed, press again to confirm the change. The display will rapidly flash the new value for a short period and then return to the recirculating fluid temperature. See Error Codes on page 24.

NOTE: If the new value is not confirmed within 60 seconds the display will return to the recirculating fluid temperature and ignore any changes.

Remote/Serial Comm

(Optional) To enable or disable remote/serial communication press until illuminates. The display will flash the communication status. Use the up arrow key to enable, the down arrow to disable.

NOTE: If the arrow keys are not pressed within 10 seconds the display will return to the current reservoir temperature.

Once the desired status is displayed, press again to confirm the change. The display will rapidly flash the new status for a short period and then return to the recirculating fluid temperature.

NOTE: If the new status is not confirmed within 60 seconds the display will return to the recirculating fluid temperature and ignore any change.

NOTE: Enabling serial communications disables the remote start/stop feature, see page 22. In either mode, the setpoint and alarm values can not be changed using the controller but they can still be viewed.

Stopping

To turn the unit off, press I/O.

Setup/Tuning Loop

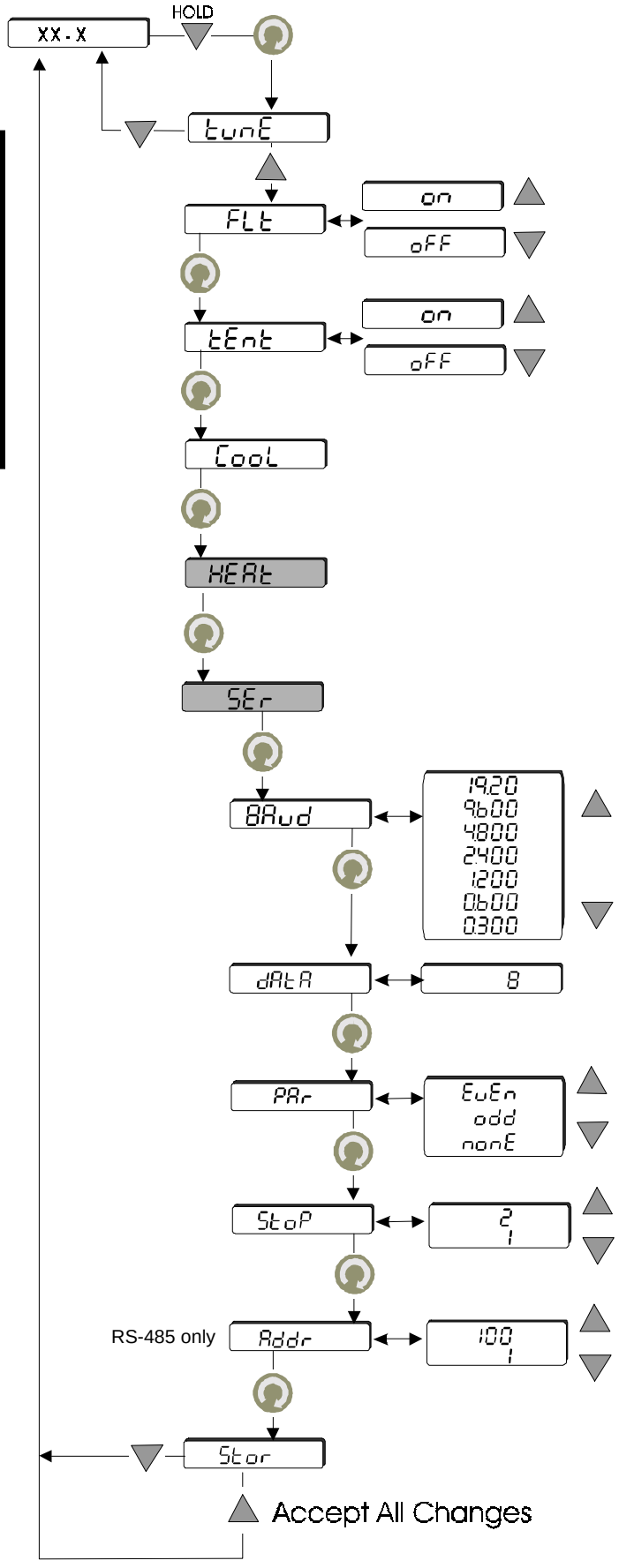

The Setup/Tuning Loop is used to configure the controller temperature display and various operating parameters. To enter the loop you must be displaying the reservoir fluid temperature and then, while pressing and holding ▼, press ⟳. The display will indicate tunE. Use the arrow keys to enter/bypass the loop. Once in the loop press ⟳ to sequence through it. Use the arrow keys to change any display.

The loop is used to determine how the unit will react when a fault occurs (FLt) — either shut down (on) or continue to run (oFF). The unit is shipped configured to run.

It is also used to configure the temperature displays to indicate to a tenth of a degree (tEnt).

The loop can also be used to set the controller's PID parameters (CooL HEAt). The Thermo NESLAB factory preset values are:

COOL	P	I	D
STD TEMP UNITS	20	0.5	0.0
LOW TEMP UNITS	12	0.5	0.0
HIGH TEMP UNITS	7	0.5	0.0
HEAT			
ALL UNITS	5	0.5	0.0

Thermo NESLAB recommends that only a qualified technician change PID parameters. Incorrect PID values will hamper unit performance.

The heat PID is only applicable to units configured with a heater.

The loop is also used to adjust/verify serial communication parameters (SEr). This section of the loop is applicable only to units configured for serial communications capability.

Changes made in the Tuning/Setup Loop take affect when ▲ is pressed at the Stor prompt. Pressing ▼ at the prompt aborts *all* changes.

Section IV Options

Communication Connector



A female 9-pin D-connector is located on the rear of the unit. The connector is used for either RS-232 or RS-485 serial communication (see Appendix B or C).

When the unit is controlled via serial communication the  LED on the controller is illuminated.

When the unit is configured for serial communication the unit cannot be started using the local controller. However, the unit can be stopped using the local controller. To restart, send another start command.

RS-232 (J-102) COMM Pin Connection

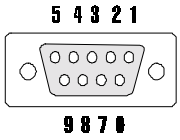

Pin #	Function
1	No connection
2	TX = Transmitted data from controller
3	RX = Received data to controller
4	No connection
5	GND = Signal ground
6	No connection
7	No connection
8	No connection
9	No connection

Hardware **Mating Connector**
AMP Part# 745492-2 or equivalent

RS-485 (J-103) COMM Pin Connections

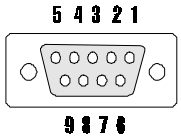

Pin #	Function
1	No connection
2	No connection
3	No connection
4	No connection
5	No connection
6	No connection
7	No connection
8	TX = Transmitted data from controller
9	RX = Received data to controller

Hardware **Mating Connector**
AMP Part# 745492-2 or equivalent

Remote Start/Stop



A male 9-pin D-connector is located on the rear of the unit. The connector is used for either 12 - 24VAC or 12 - 24VDC remote start/stop; and as a status relay dry contact.

To start the unit from a remote location apply the correct voltage to J101, pins 4 & 5. When the unit is started by a remote start/stop voltage on the controller will flash.

Once started remotely, stop the unit by removing the applied voltage from J101 or by pressing I/O on the local controller. To restart remotely after stopping locally remove and reapply the remote start voltage to J101.

NOTES:
Enabling serial communications disables the remote start/stop feature.

Should the unit experience a high/low temperature warning/fault, a reservoir level warning/fault, or a low pump flow warning/fault, the status relay will de-energize.

(J-101) COMM Pin Connection

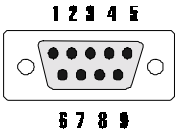

Pin #	Function
1	Status, NO
2	Status, NC
3	Status, Common
4	Remote On +
5	Remote On -
6	No Connection
7	No Connection
8	No connection
9	No connection

Hardware **Mating Connector**
AMP Part# 745491-2 or equivalent

Remote Start Input:
12 to 24 Volts DC ±10% maximum input current, 9ma.

12 to 24 Volts AC ±10% maximum input current, 5ma.

Absolute maximum input voltages:
40 volts rms. continuous.

56 volts peak.

Reservoir Level Warning/Fault

NOTE: This is a standard feature for high-temperature units.

Should the reservoir fluid level drop below normal the mutable alarm will sound, the status relay will de-energize, an error message will be displayed, and, depending on the unit's configuration, the unit will continue to run or shut down. Refill the reservoir and, if necessary, restart the unit.

The unit will not start without any fluid in the reservoir regardless of how it is configured.

The unit is configured to run or shut down using the controller's Setup/Tuning Loop on page 20.

Low Pump Flow Warning/Fault

NOTE: This is a standard feature for high-temperature units.

Should the pump flow drop below 0.25 gpm (1.0 gpm for units with a CP-55 pump) the mutable alarm will sound, the status relay will de-energize, an error message will be displayed, and, depending on the unit's configuration, the unit will continue to run or shut down.

Once the cause of the low flow is identified and corrected restart the unit, if necessary.

The unit is configured to run or shut down using the controller's Setup/Tuning Loop, see page 20

Additional Accessories

External Filtration Package
A partial flow liquid filter available in 5, 10, 25, and 40 micron filter sizes.

External DEI Package
Partial flow DEI package will maintain between 1 and 3 megohm/cm^2 water resistivity. A cartridge indicator lets you know when the filter needs changing.

Condenser Air Filter
An easy to install air filter protects the condenser in dusty environments.

Section V Maintenance and Service

Error Codes

On Start Up:

Er00 ROM ckecksum. Clear with key.

Er01 Test failure. Locks up the program.

Er02 Display board failure. Clears when display board is fixed.

Er03 Critical checksum failure. Clear with key.

Er 14 Synchronous comm

Er 15 Asynchronous comm

Er 16 Bad calibration data

Unusual Hardware Conditions

These errors will flash on the display and cannot be cleared. These are internal controller problems.

Er04 through Er 13 - Interrupt errors during runtime.

ConF BOM invalid

Functional/ Machine errors

These are the runtime/logic errors. These errors will clear themselves once the problem disappears.

Error Display	Indication
Lot	Low temp setpoint warning/fault
Add	Low level warning, fluid below minimum fill level, see page 15
Hit	High temp setpoint warning/fault
Er25	Shorted RTD1
Er26	Open RTD1
LoFL	Low process flow warning/fault
LLF	Fluid low level fault - unit shuts down
Er50	Low flow to heat exchanger fault - unit shuts down

Unit reaction to warning/fault errors depend on how the unit is configured, see Setup/Tuning Loop on page 20. The unit is shipped configured to continue running. If any other code appears contact Thermo NESLAB customer service.

Displaying Software Version Number

The controller can display the installed software version number. For example, for a unit with software version **026950.1A**:

1. Unit is running normally and displaying recirculating fluid temperature.
2. Press and hold ▼ for at least 10 seconds. The display will show the first two digits, for example: 02 .
3. Press 
   The display will show the remaining digits to the left of the decimal, for example: 6950.
4. Press 
   The display will show the decimal point and the digit to the right of the decimal point, for example, .1 .
5. Press 
   The display will show the revision letter, as its equivalent number, for example, 1 = A.
6. Press 
   Disregard this display.
7. Press 
   The display returns to the recirculating fluid temperature.

Cleaning

Reservoir

Periodically inspect the fluid inside the reservoir. If cleaning is necessary, flush the reservoir with a cleaning fluid compatible with the circulating system and the cooling fluid.

The cooling fluid should be replaced periodically. Replacement frequency depends on the operating environment and amount of usage.



Before changing the cooling fluid ensure it is at a safe handling temperature.

NOTE: It will be necessary to use a wet-vac or siphon to completely drain the reservoir. Use care so as not to damage the reservoir float switch.

See page 15, Filling Requirements, for instructions on cooling fluid replacement.

Condenser

For proper operation, the unit needs to pull substantial amounts of air through a condenser. A build up of dust or debris on the fins of the condenser will lead to a loss of cooling capacity. Optional air filters are available, contact our Service Department. See Preface, After-Sale Support.

The lower front of the unit has a one-piece grille assembly. Using your hands gently pry the assembly off. Use care not to scratch the paint.

Periodic vacuuming of the condenser fins is necessary. The cleaning frequency depends on the operating environment. After initial installation we recommend a monthly visual inspection of the condenser. After several months, the cleaning frequency will be established.



Use care cleaning the condenser fins, they can easily bend.

Algae

To restrict the growth of algae in the reservoir, it is recommended that the reservoir cover be kept in place and that all circulation lines be opaque. This will eliminate the entrance of light which is required for the growth of most common algae.

ThermoNESLAB recommends the use of Chloramine-T, 1 gram per 3.5 liters. Other algicides can be harmful to the unit's internal components. Contact Thermo NESLAB for additional information.

Leaks

A very small leak between the pump and motor is normal. If this is a new pump, allow it to run for 24 hours and reinspect. A continuous leak will require pump replacement.

PD Pressure Relief Valve



Units with PD pumps have a Pressure Relief Valve. The valve is used to adjust the unit's fluid flow/pressure.

NOTE: The valve is factory preset for the most common applications and normally requires no further adjustment. Also, the unit's pump is factory preset not to exceed 80±5 psi (550±1 kPa).

Before adjusting the valve turn the unit off. Locate the circular relief valve opening on the rear of the unit.

Turn the threaded stem fully clockwise.

If the unit is not plumbed to an application, install a loop of hose equipped with a shut-off valve between the supply and return fittings.

Turn the unit on.

Use the pressure gauge to read the relief valve setting.

Back out the threaded stem on the relief valve counterclockwise. Continue until the gauge indicates 80 psi (550 kPa) or the desired setting.

NOTE: The relief valve may drip if the threaded stem is backed out too far.

PD Pump Strainer

Units with PD pumps have a strainer. Refer to the serial tag label on the rear of the unit and the BOM decoder on page 29 to identify the type of pump.

If debris is in the system, the strainer will prevent the material from being drawn into the pump and damaging the pump vanes. A clogged strainer will also cause increased discharge pump pressures.

After initial installation, the strainer may become clogged with debris and scale. Therefore, **the strainer must be cleaned after the first week of installation**. After this first cleaning, we recommend a monthly visual inspection. After several months, the cleaning frequency will be established.

Before cleaning the strainer ensure the cooling fluid it is at a safe handling temperature. Disconnect the power cord from the power source and drain the unit.

PD pumps have a strainer located in the pump suction line. The strainer is located behind the right-side panel.

Remove the panel from the unit. Use one wrench to support the filter housing, and a second wrench to unscrew the 1¼ inch fitting. Remove the screen.

Clean the screen by rinsing it with water. When the screen is clean, replace it in the strainer, tighten the fitting and replace the panel. Refer to Section III for instructions on replacing the cooling fluid.

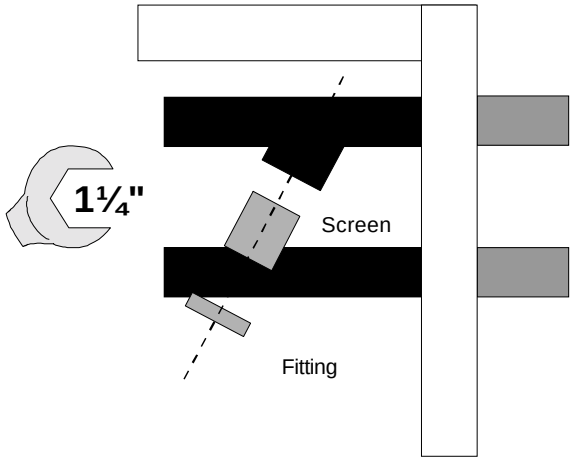

Right-side view

PD Pump Motor Lubrication

Some PD pumps use sleeve type bearings with large reservoirs. Oiling instructions are generally posted on each motor. In the absence of instructions, add approximately 30 to 35 drops of SAE 20 non-detergent oil to each bearing on the following schedule (SAE 20 = 142 CS viscosity):

Duty Cycle	Oiling Frequency
Continuous	Once every year
Intermittent	Once every 2 years
Occasional	Once every 5 years

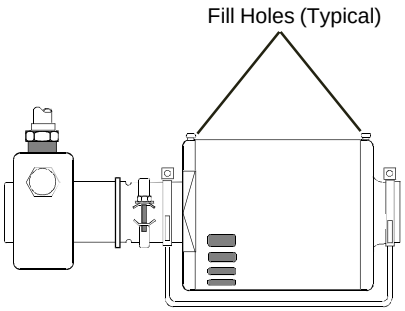

BOM Decoder

The Bill of Material (BOM) number helps identify the configuration of your unit. The number is printed on the label located on the rear of the unit.

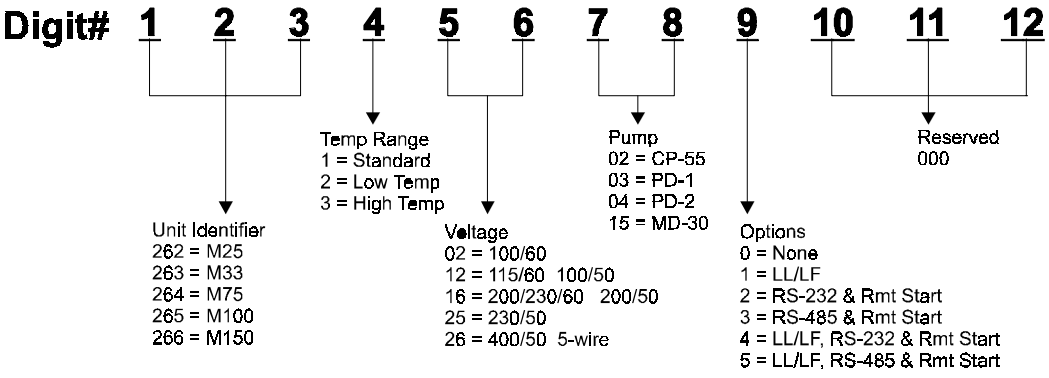

Section VI Troubleshooting

Checklist

Unit will not start

Check the line cord; ensure it is plugged in.

Check the position of the circuit breaker on the rear of the unit.

Check the controller for error codes, see page 24.

NOTE: On units with a Low Flow Switch and configured to shut down with a low flow fault (LoFL), several starting attempts may be necessary.

On units with a Reservoir Level Switch check the reservoir level.

Optional serial communications or remote start/stop enabled.

Make sure power source voltage is within the unit rated voltage ±10%.

400 Volt, 50 Hertz units are equipped with a phase monitor. Ensure proper phase to the unit.

If  is lit, the unit was shut off using serial communications. Start the unit using serial communications. To start the unit using the local controller press and hold both arrow keys for 10 seconds, the controller will power. Turn serial communications off using the procedure on page 17, and then press  to turn off the controller. Press  again to start the unit.

Unit will not circulate fluid

Check the reservoir level. Fill, if necessary.

Check the position of the reservoir tank valves. See Reservoir Tank Valves.

Check the instrument being cooled for restrictions in the cooling line.

Check the pump strainer (units with PD pumps).

The pump motor may be too hot. Allow it to cool.

Check the pressure gauge, adjust the relief valve as necessary (units with PD pumps).

Inadequate temperature control

Verify the setpoint.

If the temperature continues to rise, make sure your application's heat load does not exceed the rated specification, see Section II, Specifications.

Make sure the air intake and discharge are not impeded and the ambient temperature does not exceed +35°C.

Make sure the condenser is free of dust and debris, see Section V, Maintenance and Cleaning.

Verify the controller's PID values, see Setup/Tuning Loop.

No serial communications (optional)

All units are tested for serial communications before they leave the factory. Check the controller, ensure serial communication is enabled.

Check all communications commands, they *must be exact*. See Appendix B or C.

Check all wiring for proper connections or possible shorts.

Software to verify serial communication is available from Thermo NESLAB.

Service Assistance

If, after following these troubleshooting steps, your unit fails to operate properly, contact our Service Department for assistance (see Preface, After-sale Support). Before calling, *please* obtain the following information:

- *unit BOM number*
- *unit serial number*
- *software version*
- *voltage of power source*

Appendix A Water Quality Standard and Recommendations

	Permissible (PPM)	Desirable (PPM)
Microbiologicals		
(algae, bacteria, fungi)	0	0
Inorganic Chemicals		
Calcium	<40	0.6
Chloride	250	<25
Copper	1.3	1.0
Iron	0.3	<0.1
Lead	0.015	0
Magnesium	<12	0.1
Manganese	0.05	<0.03
Nitrates\Nitrites	10 as N	0
Potassium	<20	0.3
Silicate	25	<1.0
Sodium	<20	0.3
Sulfate	250	<50
Hardness	17	<0.05
Total Dissolved Solids	50	10
Other Parameters		
pH	6.5-8.5	7-8
Resistivity	0.01*	0.05-0.1*

* Megohm-Cm (Compensated to 25°C)

Unfavorably high total ionized solids (TIS) can accelerate the rate of galvanic corrosion. These contaminants can function as electrolytes which increase the potential for galvanic cell corrosion and lead to localized corrosion such as pitting which can be observed at the studs and on the outside surface of cooling coils. Eventually, the pitting will become so extensive that the coil will leak refrigerant into the water reservoir.

For example, raw water in the U.S. averages 171 ppm (of NaCl). The recommended level for use in a water system is between 0.5 to 5.0 ppm (of NaCl).

Recommendation: Initially fill the tank with distilled/deionized water. Do not use untreated tap water as the total ionized solids level may be too high.

Maintain this water quality at a resistivity of between 1 to 10 megohm-cm (compensated to 25°C) by using a purification system. Although the initial fill may be as high as 10 megohm-cm (compensated to 25°C), the desired level for long time usage is 1 to 3 megohm-cm (compensated to 25°C).

The above two recommendations will reduce the electrolytic potential of the water and prevent or reduce the galvanic corrosion observed.

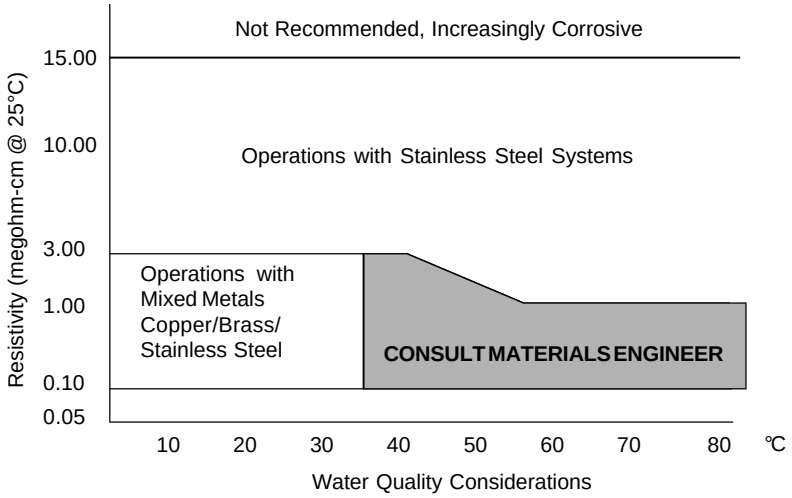

Merlin Compatibility with Recommended Fluids

Filtered/Singled Distilled water, +5°C to +85°C

This fluid is recommended primarily because it has all microorganisms that cause biological fouling removed through vaporizing and condensing the water. However, distilled water does not remain pure for very long when exposed to the atmosphere. Air-born spores can contaminate the water and activate alga growth. Chloramine-T is a compatible algaecide that can be used to combat growth but a more effective maintenance plan would include switching out the fluid with newly distilled water every six month. The particulates that have been filtered out in the process are also preventative in keeping the system "clean" of contaminants. One thing to note is that distilling water that contains an additive could increase the concentration of that additive in the water.

50/50 Uninhibited Ethylene Glycol/Water (-15°C to + 60°C)

Ethylene glycol is used to depress the freezing point of water as a coolant. We are recommending to not use the inhibited (no corrosion additives) above 60°C because it breaks down into acidic by-products faster at high temperatures. These acidic by-products, especially carbonic acid, are corrosive to copper. The inhibitors are used to control the corrosion rates by passivating the metal surfaces with an inert film. Uninhibited ethylene is more corrosive to copper that plain water so therefor it should not be recommended unless it is required for the application.

50/50 Inhibited Ethylene Glycol/ Water (-15°C to +90°C)

Inhibited glycol can be used to increase the operating temperature range of the fluid but should not be used as a "pre-mixed anticorrosive" solution. Again, this fluid does break down over time at high temperatures. Dow uses a pH standard of 8 to base when the fluid has become corrosive. Dowtherm is an ethylene based product that contains dipotassium phosphates in a 4% concentration. The recommended use of Dowtherm is mixing with distilled or deionized water or water that contains less than 25 ppm chloride and sulfate and less than 100 ppm total hardness of CACO3. The general term, inhibited glycol/water, almost too close to meaning inhibited water. Inhibited water can have many types of additives including chromate that will foul our cooling system very quickly. Some inhibitor additives can release the bonding agent in the carbon graphite in the PD2 pumps and therefor are incompatible, such as Sodium Hydroxide.

50/50 Uninhibited Propylene Water (-15°C to + 60°C)

Although the use of this glycol similar to ethylene glycol, propylene glycol is considered "safe" to use in the food industry. Propylene is less dense than ethylene and therefor will have a tendency to weep more through mechanical seals.

50/50 Inhibited Propylene/ Water (-15°C to +90°C)

Same issues as with uninhibited propylene and inhibited ethylene glycol.

Deionized water (1-3 megohm, compensated, +5°C to 85°C)

This water has the ions controlled so that they will not conduct and cause galvanic corrosion between dissimilar metals. Deionized water is aggressive to metal when it is too pure since this is not the normal state of water. The leaching of metallic ions from the metal surface is seen in pitting.

NEVER use flammable or corrosive fluids with this unit. Do not use automotive anti-freeze. Commercial antifreeze contains silicates that can damage the pump seals. Use of automotive antifreeze will void the manufacturer's warranty.

Wetted Materials

PD PUMPS (Part Number 008806- PD2, Part Number 008816-PD1):
Carbon Graphite (Graphitar Type B)
Brass
303 Stainless Steel
Ceramic (85% Aluminum Oxide and Balance is Considered Glass)
Fluorocarbon (Viton equivalent)
Ultem (relief Valve Material)

MD-30 (Part Number 026922):
Polypropylene
Ceramic
Magnet
Buna-N

CP-55 PUMP (Part Number 026652):
Stainless Steel
Viton

Evaporator
(Part Numbers 026964/026945/026880):
AISI 316 Stainless Steel
Copper Brazing

Tank Fittings:
Brass

Strainer (Part Number 009334):
Bronze
304 Stainless Steel Mesh

Tank Cap (Part Number 026992):
Nylon

Tank Body (Part Number 026933):
Polyethylene (LLPDE, Mobile NRP=135)

Hose Assemblies/Plumbing:
Buna-N (Parker Push-Lok O-ring)
Nitrile based synthetic rubber (Parker Push-Lok hoses) Part Number 026931
Brass Part Number 032688
Copper Part Number 003752

Ball Valve (Part Number 026981):
Viton
Chrome plated brass body and ball
PTFE

Sealants:
95/5 solder
Bcup5 Brazing
Anearobic Methacrylate Ester (Perma-Lok LM012) - 013002

Low Level/Low Flow Switches (Optiona1):
Polysulphone (Part Number 026900) Low Level
Brass (Part Number 026901) Low Flow

Appendix B RS-232 Serial Communications Protocol

NOTE: This appendix assumes you have a basic understanding of communications protocols.

All data is sent and received in binary form, do not use ASCII. In the following pages the binary data is represented in hexadecimal (hex) format.

The Thermo NESLAB Serial Communications Protocol, NC, is based on a master-slave model. The master is a host computer, while the slave is the chiller's controller. Only the master can initiate a communications transaction (half-duplex). The slave ends the transaction by responding to the master's query. The protocol uses an RS-232 serial interface with the default parameters: 9600 baud, 8 data bits, 1 stop bit, no parity and no handshaking.

NOTE: Before the unit will communicate, RS-232 must be turned on using the controller. Ensure the indicator is illuminated.

The unit can be controlled through your computer's serial port by using the unit's standard 9-pin RS-232 connection. Data read of the serial port connects to the data transmit (pin 2) of the unit. Data transmit of the serial port connects to data read (pin 3) of the unit.

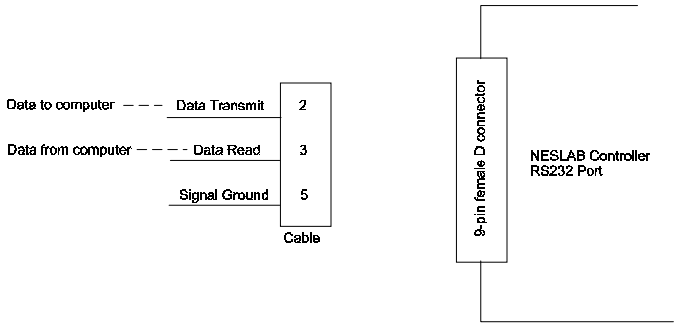

Communication cables are available from Thermo NESLAB. Contact our sales department for additional information.

All commands must be entered in the exact format shown in the tables on the following pages. The tables show all commands available, their format and responses. Controller responses are either the requested data or an error message. The controller response *must* be received before the host sends the next command.

The host sends a command embedded in a single communications packet, then waits for the controller's response. If the command is not understood or the checksums do not agree, the controller responds with an error command. Otherwise, the controller responds with the requested data. If the controller fails to respond within 1 second, the host should resend the command.

NC Serial Communications Protocol

NOTE: All byte values are shown in hex, hex represents the binary values that must be sent to the chiller. **Do not use ASCII.**

The framing of the communications packet in both directions is:

	Checksum region						
Lead char CA	Addr-MSB 0	Addr-LSB 1	Command	n d-bytes	d-byte 1 …	d-byte n	Checksum

Lead char	CA (hex).
	Device address is 1
Addr-msb	Most significant byte of device address is 0.
Addr-lsb	Least significant byte of device address is 1.
Command	Command byte (see Table 1).
n d-bytes	Number of data bytes to follow (00 to 03 hex).
d-byte 1	1st data byte (the qualifier byte is considered a data byte).
…	…
d-byte n	nth data byte.
Checksum	Bitwise inversion of the 1 byte sum of bytes beginning with the most significant address byte and ending with the byte preceding the checksum. (To perform a bitwise inversion, "exclusive OR" the one byte sum with FF hex.)

The master requests information by sending one of the Read Functions as shown in Table 1. Since no data is sent to the chiller during a read request, the master uses 00 for the number of data bytes following the command byte.

Appendix B

The chiller will respond to a Read Function by echoing the lead character, address, and command byte, followed by the requested data and checksum. When the chiller sends data, a qualifier byte is sent first, followed by a two byte signed integer (16 bit, MSB sent first). The qualifier byte indicates the precision and units of measure for the requested data as detailed in Table 2.

As an example, the master requests to read internal temperature by sending:

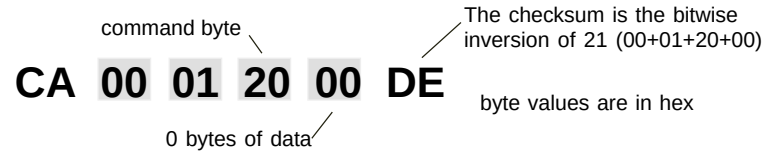

If the temperature is -12°C, the slave would reply:

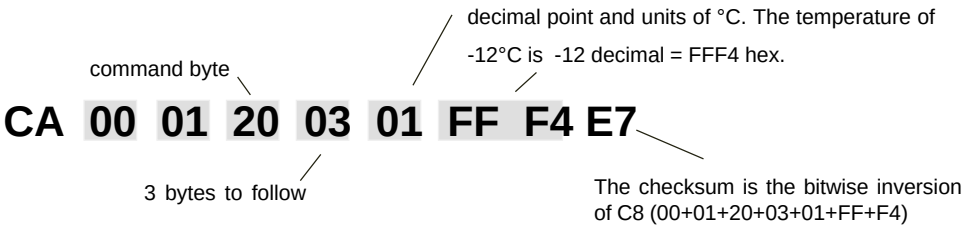

The master sets parameters in the chiller by sending one of the Set Functions as shown in Table 1. The master does not send a qualifier byte in the data field. The master should be preprogrammed to send the correct precision and units (it could also read the parameter of interest first to decode the correct precision and units needed).

For example, if the master wants to set the setpoint to 30°C, it would send :

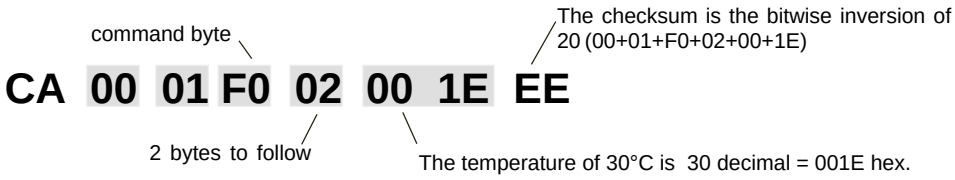

The slave responds:

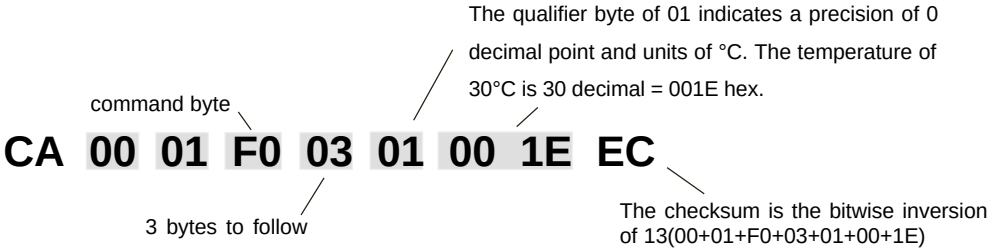

Table 1 Commands (All bytes are in hex)

FUNCTION	MASTER SENDS	UNIT RESPONDS
READ		
Read Acknowledge	CA 00 01 **00** 00 FE	CA 00 01 **00** 02 v1 v2 cs
Read Status*	CA 00 01 **09** 00 F5	CA 00 01 **09** 02 d1 d2 cs
Error		CA 00 01 **0F** 02 en ed cs
Read Internal Temperature	CA 00 01 **20** 00 DE	CA 00 01 **20** 03 qb d1 d2 cs
Read Setpoint (control point)	CA 00 01 **70** 00 8E	CA 00 01 **70** 03 qb d1 d2 cs
Read Low Temperature Limit	CA 00 01 **40** 00 BE	CA 00 01 **40** 03 qb d1 d2 cs
Read High Temperature Limit	CA 00 01 **60** 00 9E	CA 00 01 **60** 03 qb d1 d2 cs
Read Cool Proportional Band (P)	CA 00 01 **74** 00 8A	CA 00 01 **74** 03 qb d1 d2 cs
Read Cool Integral (I)	CA 00 01 **75** 00 89	CA 00 01 **75** 03 qb d1 d2 cs
Read Cool Derivative (D)	CA 00 01 **76** 00 88	CA 00 01 **76** 03 qb d1 d2 cs
Read Heat Proportional Band (P)	CA 00 01 **71** 00 8D	CA 00 01 **71** 03 qb d1 d2 cs
Read Heat Integral (I)	CA 00 01 **72** 00 8C	CA 00 01 **72** 03 qb d1 d2 cs
Read Heat Derivative (D)	CA 00 01 **73** 00 8B	CA 00 01 **73** 03 qb d1 d2 cs

command bytes shown in **bold**
qb = qualifier byte, see Table 2
d1,d2 = 16 bit signed integer of the value being sent or received
cs = the checksum of the string (see text)
* See Read Status, see Table 3

v = protocol version
ed = error data
en = error number 01: Bad command, 02: Bad data, 03: Bad checksum
xx = no valid data, include in checksum

Table 1 Commands (continued) (All bytes are in hex)

FUNCTION	MASTER SENDS	UNIT RESPONDS
SET		
Set Setpoint (control point)*	CA 00 01 **F0** 02 d1 d2 cs	CA 00 01 **F0** 03 qb d1 d2 cs
Set Low Temp	CA 00 01 **C0** 02 d1 d2 cs	CA 00 01 **C0** 03 qb d1 d2 cs
Set High Temp	CA 00 01 **E0** 02 d1 d2 cs	CA 00 01 **E0** 03 qb d1 d2 cs
Set Cool Proportional Band (P=1-99.9)	CA 00 01 **F4** 02 d1 d2 cs	CA 00 01 **F4** 03 qb d1 d2 cs
Set Cool Integral (I = 0-9.99)	CA 00 01 **F5** 02 d1 d2 cs	CA 00 01 **F5** 03 qb d1 d2 cs
Set Cool Derivative (D= 0-5.0)	CA 00 01 **F6** 02 d1 d2 cs	CA 00 01 **F6** 03 qb d1 d2 cs
Set Heat Proportional Band (P=1-99.9)	CA 00 01 **F1** 02 d1 d2 cs	CA 00 01 **F1** 03 qb d1 d2 cs
Set Heat Integral (I = 0-9.99)	CA 00 01 **F2** 02 d1 d2 cs	CA 00 01 **F2** 03 qb d1 d2 cs
Set Heat Derivative (D= 0-5.0)	CA 00 01 **F3** 02 d1 d2 cs	CA 00 01 **F3** 03 qb d1 d2 cs
Set On/Off Array**	CA 00 01 **81** 02 d1 d2 cs	CA 00 01 **81** 01 d1 cs
Turn Off	CA 00 01 **81** 01 00 7C	CA 00 01 **81** 01 d1 cs
Turn On	CA 00 01 **81** 01 01 7B	CA 00 01 **81** 01 d1 cs
Is On or Off?	CA 00 01 **81** 01 02 7A	CA 00 01 **81** 01 d1 cs

* = limited to the range of the chiller
command bytes shown in **bold**
qb = qualifier byte, see Table 2
d1,d2 = 16 bit signed integer of the value being sent or received
cs = the checksum of the string (see text)

** d1: 0 = Off (unit)
1 = On
2 = No change

Table 2

QUALIFIER BYTE

00	0 precision, no units of measure
01	0 precision, °C
10	1 precision, no units of measure
11	1 precision, °C
20	2 precision, no units of measure

Example: The temperature of 45.6°C would be represented by the qualifier 11 hex, followed by the 2 bytes 01 C8 hex (456 decimal).

Table 3

REQUEST STATUS

BIT	d1	d2
b.7 = 1	0	Reserved
b.6 = 1	Reserved	Freeze Fault
b.5 = 1	Low Flow Warning	RTD1 Fault
b.4 = 1	Low Level Warning	0
b.3 = 1	High or Low Temp Warning	High Temp Fault
b.2 = 1	High or Low Temp Bypass	Low Temp Fault
b.1 = 1	Unit Faulted	Low Flow Fault
b.0 = 1	Unit Running	Low Level Fault

Appendix C RS-485 Serial Communications Protocol

NOTE: This appendix assumes you have a basic understanding of communications protocols.

All data is sent and received in binary form, do not use ASCII. In the following pages the binary data is represented in hexadecimal (hex) format.

The Neslab Serial Communications Protocol, NC, is based on a master-slave model. The master is a host computer, while the slave is the bath's controller. Only the master can initiate a communications transaction (half-duplex). The slave ends the transaction by responding to the master's query. The protocol uses an RS-485 serial interface with the default parameters: 9600 baud, 1 start bit, 8 data bits, 1 stop bit, no parity and a selectable address from 1 to 100.

NOTE: Before the unit will communicate, RS-485 must be turned on using the controller. Ensure the  indicator is illuminated.

The unit can be controlled through your computer's RS-485 serial port by using the unit's 9-pin RS-485 connection. Communication cables are available from Thermo NESLAB. Contact our sales department for additional information.

All commands must be entered in the exact format shown in the tables on the following pages. The Tables on the last page of this Appendix show all commands available, their format and responses. Controller responses are either the requested data or an error message. The controller response *must* be received before the host sends the next command.

The host sends a command embedded in a single communications packet, then waits for the controller's response. If the command is not understood or the checksums do not agree, the controller responds with an error command. Otherwise, the controller responds with the requested data. If the controller fails to respond within 1 second, the host should resend the command.

NC Serial Communications Protocol

NOTE: All byte values are shown in hex, hex represents the binary values that must be sent to the bath. **Do not use ASCII.**

The framing of the communications packet in both directions is:

	Checksum region						
Lead char CC	Addr-MSB	Addr-LSB	Command	n d-bytes	d-byte 1 …	d-byte n	Checksum

Lead char	CC (hex).
Addr-msb	Most significant byte of device address is 00 hex.
Addr-lsb	Least significant byte of device address in hex (01 to 63 hex).
Command	Command byte (see Table 1).
n d-bytes	Number of data bytes to follow (00 to 03 hex).
d-byte 1	1st data byte (the qualifier byte is considered a data byte).
…	…
d-byte n	nth data byte.
Checksum	Bitwise inversion of the 1 byte sum of bytes beginning with the most significant address byte and ending with the byte preceding the checksum. (To perform a bitwise inversion, "exclusive OR" the one byte sum with FF hex.)

The master requests information by sending one of the Read Functions as shown in Table 1. Since no data is sent to the bath during a read request, the master uses 00 for the number of data bytes following the command byte.

The bath will respond to a Read Function by echoing the lead character, address, and command byte, followed by the requested data and checksum. When the bath sends data, a qualifier byte is sent first, followed by a two byte signed integer (16 bit, MSB sent first). The qualifier byte indicates the precision and units of measure for the requested data as detailed in Table 2.

Appendix C

As an example, the master requests to read internal temperature unit address 01 by sending:

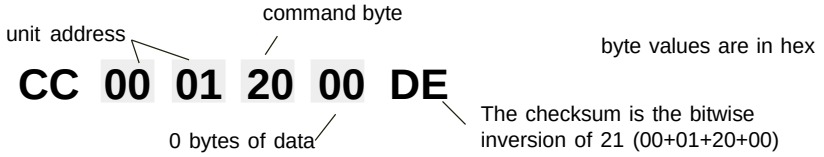

If the temperature is -10.5°C, slave #1 would reply:

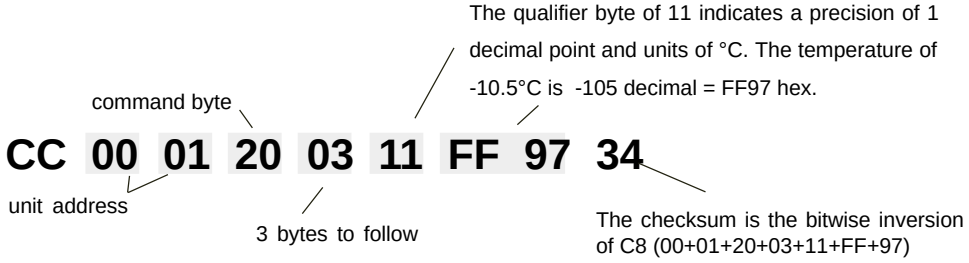

The master sets parameters in the bath by sending one of the Set Functions as shown in Table 1. The master does not send a qualifier byte in the data field. The master should be preprogrammed to send the correct precision and units (it could also read the parameter of interest first to decode the correct precision and units needed).

For example, if the master wants to set the setpoint to 30°C for unit #3, it would send :

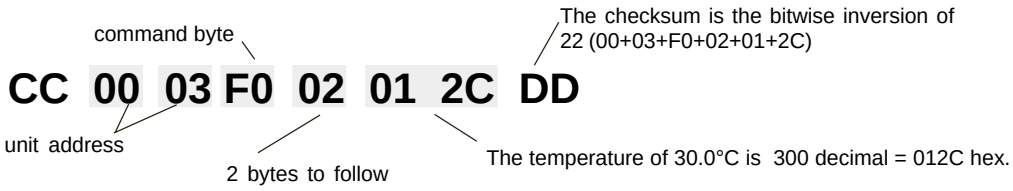

Slave #3 responds:

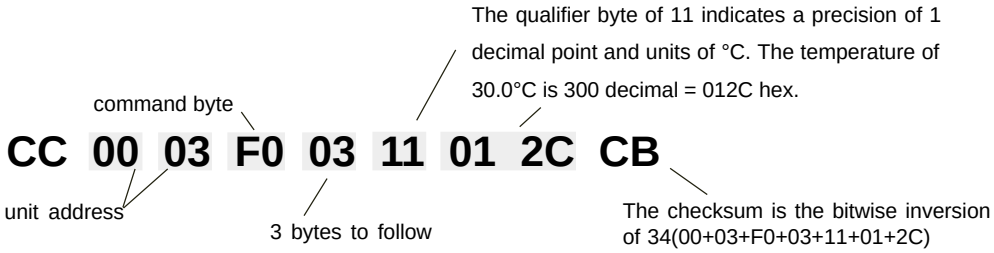

Table 1 Commands (All bytes are in hex)

FUNCTION	MASTER SENDS	UNIT RESPONDS
READ		
Read Acknowledge	CC 00 01 **00** 00 FE	CC 00 01 **00** 02 v1 v2 cs
Read Status*	CC 00 01 **09** 00 F5	CC 00 01 **09** 02 d1 d2 cs
Error		CC 00 01 **0F** 02 en ed cs
Read Internal Temperature	CC 00 01 **20** 00 DE	CC 00 01 **20** 03 qb d1 d2 cs
Read Setpoint (control point)	CC 00 01 **70** 00 8E	CC 00 01 **70** 03 qb d1 d2 cs
Read Low Temperature Limit	CC 00 01 **40** 00 BE	CC 00 01 **40** 03 qb d1 d2 cs
Read High Temperature Limit	CC 00 01 **60** 00 9E	CC 00 01 **60** 03 qb d1 d2 cs
Read Cool Proportional Band (P)	CC 00 01 **74** 00 8A	CC 00 01 **74** 03 qb d1 d2 cs
Read Cool Integral (I)	CC 00 01 **75** 00 89	CC 00 01 **75** 03 qb d1 d2 cs
Read Cool Derivative (D)	CC 00 01 **76** 00 88	CC 00 01 **76** 03 qb d1 d2 cs
Read Heat Proportional Band (P)	CC 00 01 **71** 00 8D	CC 00 01 **71** 03 qb d1 d2 cs
Read Heat Integral (I)	CC 00 01 **72** 00 8C	CC 00 01 **72** 03 qb d1 d2 cs
Read Heat Derivative (D)	CC 00 01 **73** 00 8B	CC 00 01 **73** 03 qb d1 d2 cs

command bytes shown in **bold**
qb = qualifier byte, see Table 2
d1,d2 = 16 bit signed integer of the value being sent or received
cs = the checksum of the string (see text)
* See Read Status, see Table 3
v = protocol version
ed = error data
en = error number 01: Bad command, 02: Bad data, 03: Bad checksum
xx = no valid data, include in checksum

Table 1 Commands (continued) (All bytes are in hex)

FUNCTION	MASTER SENDS	UNIT RESPONDS
SET		
Set Setpoint (control point)*	CC 00 01 **F0** 02 d1 d2 cs	CC 00 01 **F0** 03 qb d1 d2 cs
Set Low Temp	CC 00 01 **C0** 02 d1 d2 cs	CC 00 01 **C0** 03 qb d1 d2 cs
Set High Temp	CC 00 01 **E0** 02 d1 d2 cs	CC 00 01 **E0** 03 qb d1 d2 cs
Set Cool Proportional Band (P=1-99.9)	CC 00 01 **F4** 02 d1 d2 cs	CC 00 01 **F4** 03 qb d1 d2 cs
Set Cool Integral (I = 0-9.99)	CC 00 01 **F5** 02 d1 d2 cs	CC 00 01 **F5** 03 qb d1 d2 cs
Set Cool Derivative (D= 0-5.0)	CC 00 01 **F6** 02 d1 d2 cs	CC 00 01 **F6** 03 qb d1 d2 cs
Set Heat Proportional Band (P=1-99.9)	CC 00 01 **F1** 02 d1 d2 cs	CC 00 01 **F1** 03 qb d1 d2 cs
Set Heat Integral (I = 0-9.99)	CC 00 01 **F2** 02 d1 d2 cs	CC 00 01 **F2** 03 qb d1 d2 cs
Set Heat Derivative (D= 0-5.0)	CC 00 01 **F3** 02 d1 d2 cs	CC 00 01 **F3** 03 qb d1 d2 cs
Set On/Off Array**	CC 00 01 **81** 02 d1 d2 cs	CC 00 01 **81** 01 d1 cs
Turn Off	CC 00 01 **81** 01 00 7C	CC 00 01 **81** 01 d1 cs
Turn On	CC 00 01 **81** 01 01 7B	CC 00 01 **81** 01 d1 cs
Is On or Off?	CC 00 01 **81** 01 02 7A	CC 00 01 **81** 01 d1 cs

* = limited to the range of the chiller
command bytes shown in **bold**
qb = qualifier byte, see Table 2
d1,d2 = 16 bit signed integer of the value being sent or received
cs = the checksum of the string (see text)

** d1: 0 = Off (unit)
1 = On
2 = No change

Table 2

QUALIFIER BYTE

00	0 precision, no units of measure
01	0 precision, °C
10	1 precision, no units of measure
11	1 precision, °C
20	2 precision, no units of measure

Example: The temperature of 45.6°C would be represented by the qualifier 11 hex, followed by the 2 bytes 01 C8 hex (456 decimal).

Table 3

REQUEST STATUS

BIT	d1	d2
b.7 = 1	0	Reserved
b.6 = 1	Reserved	Freeze Fault
b.5 = 1	Low Flow Warning	RTD1 Fault
b.4 = 1	Low Level Warning	0
b.3 = 1	High or Low Temp Warning	High Temp Fault
b.2 = 1	High or Low Temp Bypass	Low Temp Fault
b.1 = 1	Unit Faulted	Low Flow Fault
b.0 = 1	Unit Running	Low Level Fault

WARRANTY

ThermoNESLAB Instruments, Inc. warrants for 12 months from date of shipment any ThermoNESLAB unit according to the following terms.

Any part of the unit manufactured or supplied by ThermoNESLAB and found in the reasonable judgment of ThermoNESLAB to be defective in material or workmanship will be repaired at an authorized ThermoNESLAB Repair Depot without charge for parts or labor. The unit, including any defective part must be returned to an authorized ThermoNESLAB Repair Depot within the warranty period. The expense of returning the unit to the authorized ThermoNESLAB Repair Depot for warranty service will be paid for by the buyer. ThermoNESLAB's responsibility in respect to warranty claims is limited to performing the required repairs or replacements, and no claim of breach of warranty shall be cause for cancellation or recision of the contract of sales of any unit.With respect to units that qualify for field service repairs, ThermoNESLAB's responsibility is limited to the component parts necessary for the repair and the labor that is required on site to perform the repair. Any travel labor or mileage charges are the financial responsibility of the buyer.

The buyer shall be responsible for any evaluation or warranty service call (including labor charges) if no defects are found with the ThermoNESLAB product.

This warranty does not cover any unit that has been subject to misuse, neglect, or accident. This warranty does not apply to any damage to the unit that is the result of improper installation or maintenance, or to any unit that has been operated or maintained in any way contrary to the operating or maintenance instructions specified in ThermoNESLAB's Instruction and Operation Manual. This warranty does not cover any unit that has been altered or modified so as to change its intended use.

In addition, this warranty does not extend to repairs made by the use of parts, accessories, or fluids which are either incompatible with the unit or adversely affect its operation, performance, or durability.

ThermoNESLAB reserves the right to change or improve the design of any unit without assuming any obligation to modify any unit previously manufactured.

THE FOREGOING EXPRESS WARRANTY IS IN LIEU OF ALL OTHER WARRANTIES, EXPRESSED OR IMPLIED, INCLUDING BUT NOT LIMITED TO WARRANTIES OR MERCHANTABILITY AND FITNESS FOR A PARTICULAR PURPOSE.

ThermoNESLAB'S OBLIGATION UNDER THIS WARRANTY IS STRICTLY AND EXCLUSIVELY LIMITED TO THE REPAIR OR REPLACEMENT OF DEFECTIVE COMPONENT PARTS AND ThermoNESLAB DOES NOT ASSUME OR AUTHORIZE ANYONE TO ASSUME FOR IT ANY OTHER OBLIGATION.

ThermoNESLAB ASSUMES NO RESPONSIBILITY FOR INCIDENTAL, CONSEQUENTIAL, OR OTHER DAMAGES INCLUDING, BUT NOT LIMITED TO LOSS OR DAMAGE TO PROPERTY, LOSS OF PROFITS OR REVENUE, LOSS OF THE UNIT, LOSS OF TIME, OR INCONVENIENCE.

This warranty applies to units sold in the United States. Any units sold elsewhere are warranted by the affiliated marketing company of ThermoNESLAB Instruments, Inc. This warranty and all matters arising pursuant to it shall be governed by the law of the State of New Hampshire, United States. All legal actions brought in relation hereto shall be filed in the appropriate state or federal courts in New Hampshire, unless waived by ThermoNESLAB.

NESCOM software

NESLAB INSTRUMENTS, INC.

For Windows™

NESLAB temperature control software

- For use with NESLAB digital or microprocessor based controllers
- Select from easy to use product icons
- Create graphs and charts
- Easily configure ramping functions which set the setpoint overtime
- View pop-up alarm windows which display if an alarm condition occurs

NESLAB

Table of Contents

About NEScom 1
Installing NEScom 1
Getting Started 2
- RS232 Connection & Cables 2
- Initialization 3

File Menu 4
- New 4
- Open 6
- Properties 6
- Delete 8
- Save 8
- Save As 9
- Print 9
- Exit 10

View Menu 11
- Program 11
- Chart 12
- Chart Parameters 14
- Product Panel 17
- Alarm Log 17

Program Menu 18
- Program Parameters 18
- Start Program (Ctrl+A): 21
- Stop Program (Ctrl+O): 22
- Pause Program (Ctrl+U): 22
- Sample Program 22

Alarms Menu 23
- Alarm Parameters 24
- Enable All 25
- Disable All 25
- Log Alarms 26

Indicators Menu 27
- Gauge 28
- Thermometer 29
- Meter 30
- Tank 31
- Status 32

Options Menu 34
- **Enable Communications 34**
- **Configure COM Port 35**

Window Menu 36
- **Arrange Icons 36**
- **Window Panels 36**

Help Menu 37
- **Contents 37**
- **Search 37**
- **Warranty 37**
- **On Line Manual 38**
- **Service 39**
- **Demo 40**
- **About 41**

Glossary 42

Software Warranty 43

NEScom Software Registration 45

About NEScom

NEScom Windows application provides a means for querying and controlling NESLAB products over an RS232 connection. The application bases all actions on controller icons. Once a controller icon is created, product parameters can be read and controlled.

Features include the capability to view and print a temperature and setpoint chart, configure and log alarms, run and save programs, and view indicators in the form of gauges and meters, all from menu bar selections.

NEScom Help will provide answers to the questions that will arise. Use keywords to obtain information in Help searches. Click on Help buttons for shortcuts to help topics. A glossary of terms is also located in the back of this manual.

Installing NEScom

The setup program installs NEScom and a run-time engine onto your system. Your system should have 3 -4MB disk space. Since the runtime engine requires a math coprocessor to run, we recommend installing NEScom on at least a 486 DX-33 PC with 8MB of RAM. Follow these instructions for the appropriate version of Windows:

Windows 3.x
Select Run from the File menu in the Program Manager
Type a:setup.exe (if installing from the A: drive).

Windows 95
Select Run from the Start menu.
Type a:setup.exe (if installing from the A: drive).

Setup allows you to name the installation directory to copy files. Change the destination directories by selecting Change (though we recommend you use the defaults). Once the directory names are approved select Finish to complete the installation.

Getting Started

RS232 Connection & Cables

NESLAB has cables and adapters to interface your computer to a NESLAB product. If you have a cable question, please check your configuration against the cabling suggested below. If your NESLAB product is not listed in this section call 800-NESLAB for assistance.

Computer Interface:
NESLAB suggests connecting the 25-pin male connector on your computer to a NESLAB product with the appropriate NESLAB cable listed below. Use NESLAB Adapter P/N 001935 to convert a 9-pin male port to a 25-pin male port.

NESLAB Product:
RTE, EX 110/210/220/410/510 (modbath digital/programmable):
NESLAB Cable P/N 001911 from computer to MRS232C.
MRS232C to bath.

RTE, EX 111/211/221/411/511 (bath93 digital and HX Series II controllers):
NESLAB Cable P/N 001911 from computer to MRS232C
MRS232C to bath.

RTE, EX 111/211/221/411/511 (bath93 microprocessor):
NESLAB Cable P/N 001912 from computer to bath.

LT, ULT, EX250/251 (Digital Exatrol):
NESLAB Cable P/N 001911 from computer to RS232C
RS232C to bath.

Troubleshooting:
If there is a problem contacting the product check the cable connections and ensure the NESLAB product is powered and RS232 communications is enabled. Check the parameters in Configure COM port in the Options menu. Ensure the protocol being used by NEScom is supported on the NESLAB product.

Initialization

When NEScom is executed for the first time you are prompted to enter your name as the licensee. The program will then indicate the default communication parameters. (The only other time this is required is if the initialization file gets corrupted.)

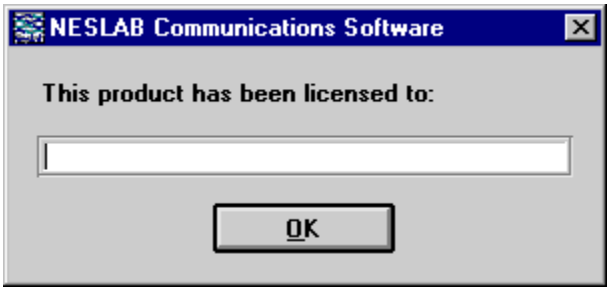

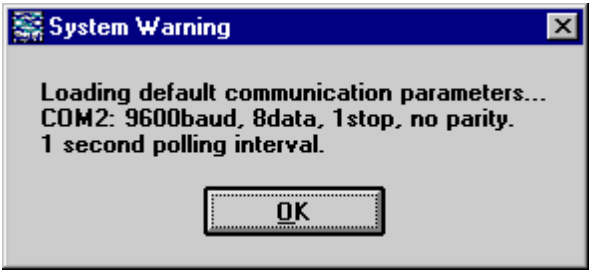

File Menu

Select File from the menu bar to display the window shown below. This menu allows you to create, open, delete or save workspaces containing various controller configurations.

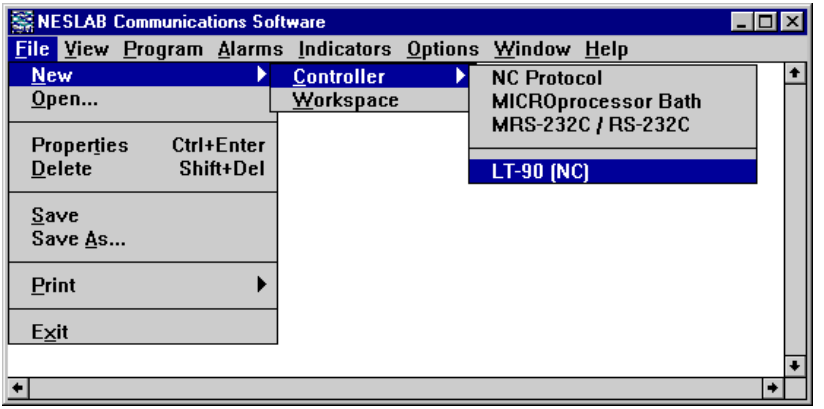

New

The options are Controller or Workspace.

Controller
Select to create a new Controller Icon. Icons are a graphical representation of a product. Up to eight (8) icons can be created for each workspace. All menu selections are based off of the active icon. An icon is active if it is highlighted. Select an icon with the mouse to make it active.

The background color of the active icon signifies its communication status.

Yellow means that NEScom is polling the device in an attempt to make contact.
Blue means that NEScom successfully contacted the device but is not currently communicating with the product.
Green indicates that NEScom is currently communicating with the product.

Red indicates that an error in communication occurred. Communication is resumed by manually enabling communications. See Properties or Enable Communications.

NOTE: Losing contact with the product does not result in a timeout error when NEScom is only requesting parameter values from the product. In this case, NEScom enters the polling mode (Yellow) and attempts to reconnect.

Select from the following icon types:

NC Protocol[1] - General support for NESLAB products that support the NC protocol.
MICROprocessor Bath[1] - General support for NESLAB Microprocessor line of baths (RTE/EX).
MRS232C/RS-232C[1] - General support for NESLAB Digital line of baths and chillers that utilize the MRS232C or RS-232C.
LT90 (NC) - Support for LT-90 utilizing the NC protocol.

Workspace
Define and configure a new workspace. A Workspace is made up of one or more controller icons. If one is already active, NEScom will prompt you to save the current workspace before a new one is defined or loaded. All icons are cleared when a new workspace is created. Once new controller icons are added, the workspace can be saved.

1. See glossary.

Open

Select this menu item to open a previously saved workspace.

File Name:
Type the file name in the space provided or select from the choices within the file list.

List Files of Type:
The default file type listed is *.nes. To list all files in the directory click on the text box and select All files (*.*).

Directories:
Choose from the default directory or browse through the directory structure.

Drives:
Choose from the default drive or select from other drive choices.

Properties

Select Properties to view the window below. Properties include: description, location/serial number, communications address and status, read only status and password.

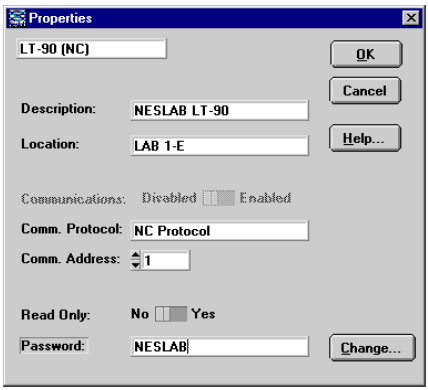

Description:
If desired, enter a new description of the unit selected to communicate with NEScom. This description will appear on the icon and

any window panel associated with this icon. The description is referenced when logging alarms.

Location:
Enter the physical location of the unit (building, lab number ...) selected to communicate with NEScom. The location is referenced when logging alarms.

Communications: Disabled—Enabled
This control is available only when there is a communication error. Under error-free operating conditions this control is dimmed and gives the status of communications. If an error occurs which causes communications to stop, communication is re-enabled by setting the switch to Enable.

NOTE: Communication is normally disabled when NEScom is not requesting parameters from the product. Once you configure NEScom to request data from the product, communication is automatically enabled.

Comm. Protocol:
This displays the current communications protocol. This display cannot be changed.

Comm. Address:
This number is used by the NC protocol as a way to identify which unit NEScom is communicating with. This address is significant in protocols that support communications with multiple units (RS-485 or RS-422). NEScom and NESLAB products supporting the NC protocol and RS-485/RS-422 can be configured with a unique address (1-32767). Any data sent from NEScom to the NESLAB product, and any data received by NEScom carries this address. Default addresses are assigned automatically when icons are created.

NOTE: An address is not required for RS-232 communications. NEScom 1.0 does not support multi-unit communications.

Read Only: No—Yes
When in read only mode, NEScom can only query a product for information and not perform any intrusive setting of product parameters (like temperature setpoint). Read Only mode is disabled by entering the correct password and selecting No on the Read Only switch.

With Read Only mode selected:

Programs cannot be started.
Setpoint cannot be changed from Product Panels.
Product Panel buttons are disabled.

Password:
A password must be entered before the Read Only mode can be disabled. All software is shipped with the password "NESLAB" as a default. Select Change.... to change your password.

Delete

Select this menu item to delete the active product icon within the workspace. When an icon is deleted, the icon created first among those remaining becomes the active icon.

NOTE: NEScom prompts to confirm the deletion. The shortcut for delete is [Shift]+[Del].

Save

Select this menu item to save the current workspace. If the workspace has not been previously saved then a dialog box will appear prompting for file information.

File Name:
Type the file name in the space provided or select from the choices within the file list.

List Files of Type:
The default file type listed is *.nes. To list all files in the directory click on the text box and select All files (*.*).

Directories:
Choose from the default directory or browse through the directory structure.

Drives:
Choose from the default drive or select from other drive choices.

Save As

Select this menu item to save the current workspace under a new file name.

File Name:
Type the file name in the space provided or select from the choices within the file list.

List Files of Type:
The default file type listed is *.nes. To list all files in the directory click on the text box and select All files (*.*).

Directories:
Choose from the default directory or browse through the directory structure.

Drives:
Choose from the default drive or select from other drive choices.

Print

Select Print from the menu choices to print a hard copy of a graph of the program in memory, a snapshot of the strip chart, the product control panel or the contents of the alarm log.

Program:
After a Program is created and loaded into memory a hard copy can be made. You can print the program in the form of a graph or plain text. A Program must be viewed if printing in graph form.

Chart:
A chart must be viewed before it can be printed. Only the portion viewed will be printed.

Control Panel:
A control panel must be viewed before it can be printed.

Alarm Log:
An Alarm Log must be opened before it can be printed. The output of the alarm log goes to the default printer.

Exit

Select Exit from the menu choices to exit the program. If the workspace has changed since the last save, a save-message prompt will appear before exiting.

Select View from the menu bar to view program graphs, strip charts, product control panels and alarm logs.

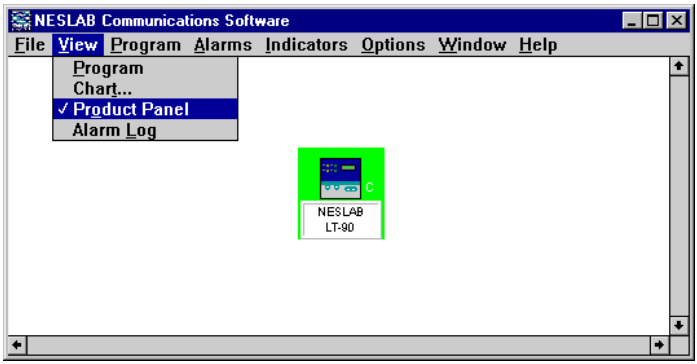

Program

Select Program to view a graphic representation of the current program. The program graph panel can be maximized or minimized but not re-sized. Restore a minimized program graph by selecting the appropriate window panel from the Window menu bar selection. Real-time plotting of temperature occurs once a program is started.

NOTE: A program must first be stored in memory, then viewed in order to be printed.

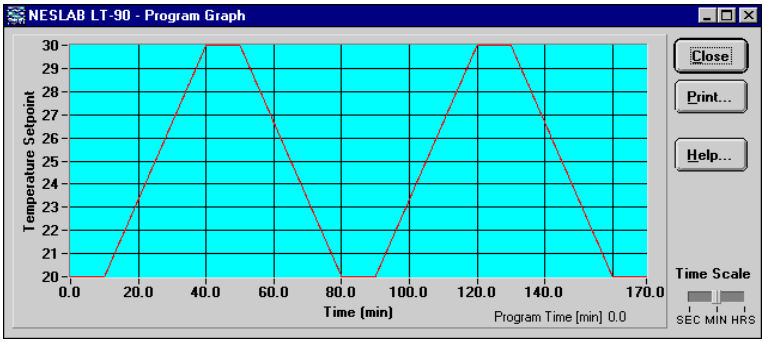

Time Scale:
Select this to switch between time scales. Choose from seconds, minutes or hours. The program graph panel defaults to minutes.

Close:
Select this to close the program graph panel.

Print:
Select this to print the program graph panel. The program can also be printed from the File menu.

Help:
Select this to display this help topic.

NOTE: A check mark to the left of the menu item signifies that the program graph panel exists for the active controller icon. Selecting this menu item when checked closes the program graph panel.

Chart

Select Chart to view a runtime plot of temperature and setpoint or, if the NC protocol is supported, any two product parameters. The strip chart can be maximized and minimized but not re-sized. Restore a minimized strip chart by selecting the appropriate window panel from the Window menu bar selection.

NOTE: A chart must be viewed in order to be printed.

When selecting this menu item, you are prompted with a pop-up panel for selecting which chart parameters to view and in what format to display the data, see figures on pages 14 and 16.

NOTE: A check mark to the left of the menu item signifies that the chart panel exists for the active controller icon. Selecting this menu item when checked closes the chart panel.

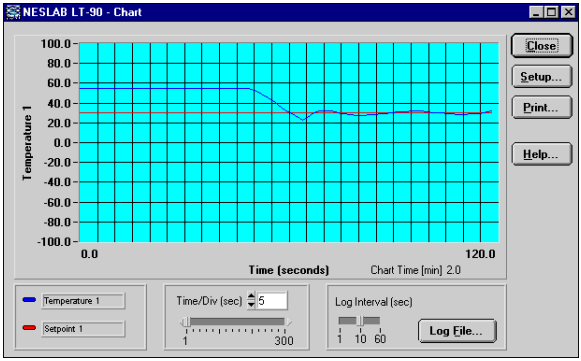

Time/division:
This selects the time interval for the x-axis divisions. There are always 24 divisions displayed along the x-axis. This time is in seconds unless the intervals are greater than five seconds. In this case the time scale for the x-axis is in minutes.

Log File... (Close File):
Select this to output data acquisition to a file. The file contains a column for time and a column for each parameter being sampled. Time is in seconds and starts with zero. The log interval is configurable, select 1, 10 or 60 seconds. Parameter headings are automatically logged to the file when it is first opened and data is written to the file as long as it is open. Close the file by clicking on "Close File" or by closing the chart panel.

Close:
Select this to close the chart panel. The operator is warned that the log file will also close (if open).

Setup:
Select this to bring up a panel for choosing which chart parameters to view and in what format to display the data.

Print:
Select this to print the chart panel. The chart can also be printed from the File menu.

Help:
Select this to display this help topic.

Chart Parameters

Chart parameter selection and format precede the creation of a chart. Format and parameter selection can be modified once a chart exists by selecting Setup. Depending on which controller icon type is active, the look of the Chart Parameters pop-up panel may vary. Only those controller icons supporting the NC protocol provide the flexibility of selecting from a variety of parameters to chart. Of all the parameters supported in the NC protocol, only those parameters supported in the actual product can be plotted on the chart. Selecting a parameter that is not supported has no affect on the strip chart.

NC Protocol

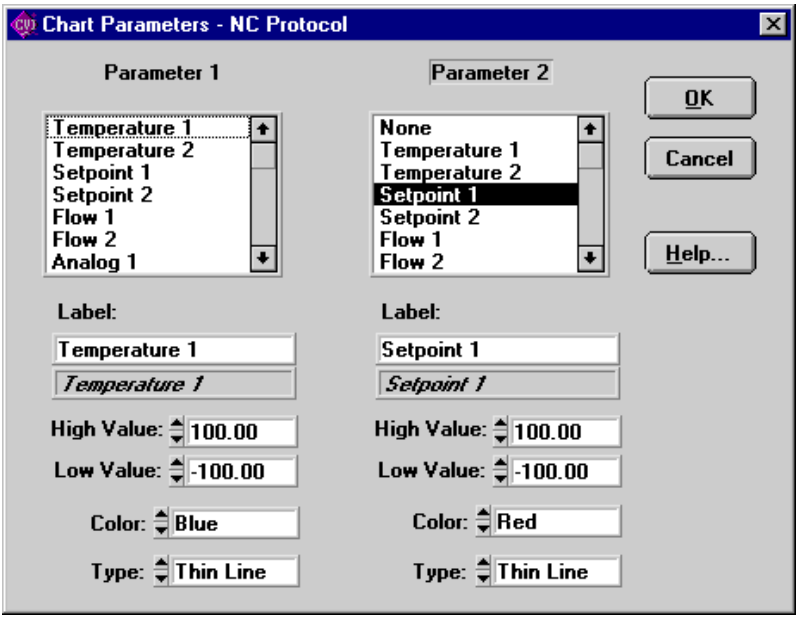

Parameter 1/Parameter 2: Select from the list of parameters. Any parameter not supported is indicated in the reference text box below the label field. To create a chart, Parameter 1 must exist. Parameter 2 is optional.

Label: By default, the parameter name appears in the Label field. This field can be edited and is limited to 30 characters. The label appears in the chart legend and as a title for the y-axis. If two parameters are charted, the label for the parameter with the widest range of y-values is used as the y-axis title.

High Value: Enter the upper limit for the parameter.

Low Value: Enter the lower limit for the parameter.

Color: Choose from 16 color choices.

Type: Choose a line style (thin line, thick line, or plotted points).

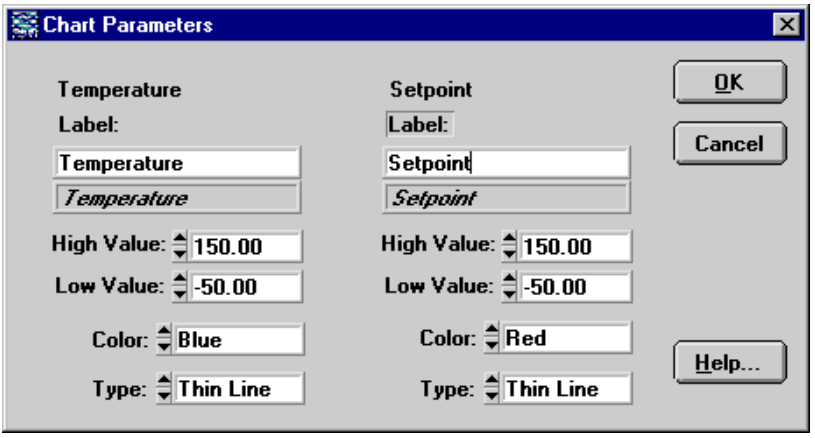

Parameters: Chart temperature and setpoint.

Label: This field can be edited and is limited to 30 characters. The label appears in the chart legend and as a title for the y-axis. The label for the parameter with the widest range of y-values is used as the y-axis title.

High Value: Enter the upper limit for the parameter.

Low Value: Enter the lower limit for the parameter.

Color: Choose from 16 color choices.

Type: Choose a line style (thin line, thick line, or plotted points).

Product Panel

Select Product Panel from the View menu to view the control panel of the active product icon. All features of the product panel are disabled in the read-only mode. If attempting to perform a function that requires disabling read-only mode, you will be prompted with a message or a beep indicating that the unit is in read-only mode.

Generic Product Panel:
All Generic controller icons share a generic product panel which displays temperature and temperature setpoint. The temperature setpoint can be updated when read-only is disabled. This is done by entering a number in the “New Setpoint” field and clicking on the “Update” button.

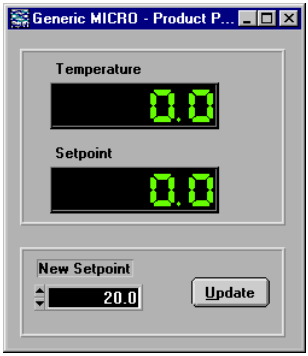

Alarm Log

Select Alarm Log from the View menu to view the contents of the alarm log in a pop-up window panel. An alarm log file must be opened in order to be viewed. Scroll through the alarm log with the vertical and horizontal scroll bars.

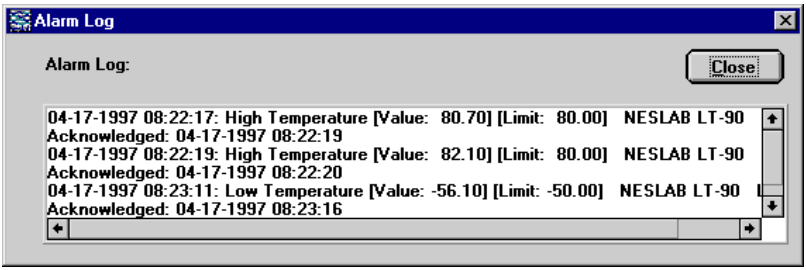

Program Menu

NEScom provides a means for programming temperature setpoints over time. Setpoint ramp and soak functions are entered as program steps. Any sequence of steps can be repeated up to 999 times with the program-loop feature.

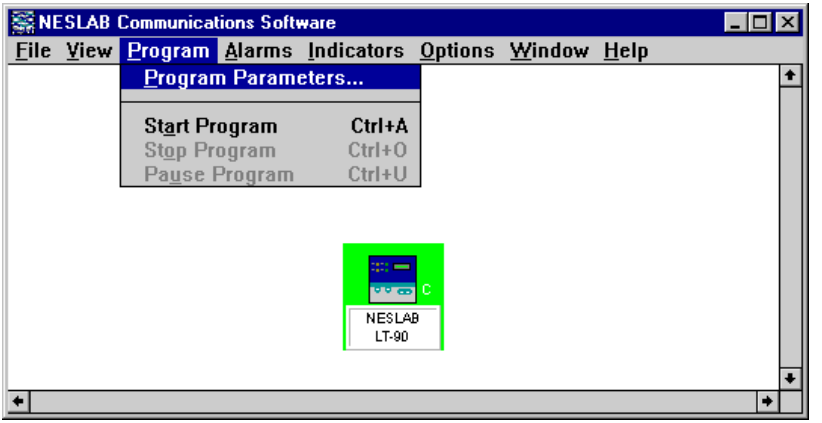

Program Parameters

Programs are built/edited, viewed and controlled using the Program Panel window. The panel is divided into the Program Edit Window (top), the Program View Window (bottom) and the Program Panel Buttons (side).

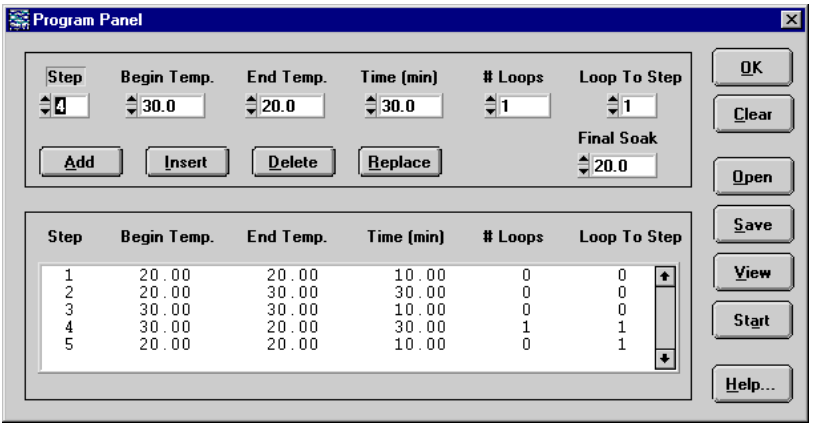

Program Edit Window
Program steps are defined by their step number. Use this window to enter program steps. Adding, inserting, deleting and replacing steps is accomplished by first choosing a step number.

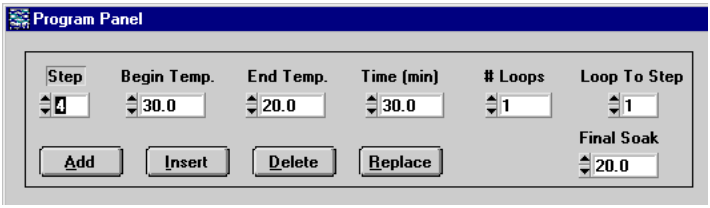

Step: Up to 12 steps can be entered starting with step 1. This field cannot exceed the highest programmed step number.

Begin Temp: Enter the beginning temperature of the program step.

End Temp: Enter the ending temperature of the program step.

Time (min): Enter the duration of the program step in minutes. Setpoint soak is achieved by setting the start and end temperatures to the same value. Soak time is the period of time entered here. Once a step is completed, the program resumes to the next step in the program unless # Loops, see below, is set greater than zero. The maximum duration for a single step is 9999.9 minutes.

 # Loops: A sequence of steps can be repeated to create a program loop. A number other than zero entered in this field equals the number of times a sequence of steps is repeated. When a program encounters a nonzero number for # Loops, it will go to the step number entered in Loop To Step and repeat this action as many times as indicated. Once the number of loop repeats is reached, the program resumes to the next step in the normal sequence of the program. A loop can repeat up to 999 times.

Final Soak: The temperature that will be maintained once the program is completed or manually stopped.

NOTE: If a communication time-out occurs, the setpoint will remain at the last setpoint.

Add: After all parameters are entered into a program step, click Add to add this step into the program.

Insert: Inserts a program step into the program. The step number of the inserted step, as indicated by the Step value, remains the same and all step numbers greater than or equal to the inserted step number are incremented by one. When a step is inserted within a loop, the Loop To Step value for that loop is not changed. When a step is inserted prior to a loop, the Loop To Step value for that loop is incremented by one.

Delete: Deletes a program step from the program, as indicated by the Step value. All step numbers greater than or equal to the inserted step number are decremented by one. When a step is deleted within a loop, the Loop To Step value for that loop is not changed. When a step is deleted prior to a loop, the Loop To Step value for that loop is decremented by one.

Replace: Replaces the program step previously entered with the current program step.

Program View Window
This view-only portion of the window details each programmed step. Scroll the window using the vertical scroll bar.

NOTE: Highlighting program steps in this portion of the window has no affect on the Program Edit Window.

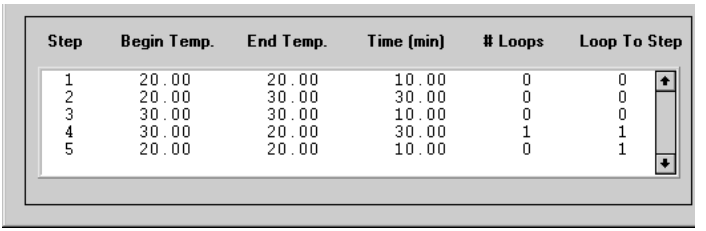

Program Panel Buttons



OK: Closes the Program Panel.

Clear: Clears the entire program currently loaded.

Open: Loads a program that has previously been saved to a file.

Save: Saves current program to the specified path and file name.

View: Displays a graphic representation of the current program.

Start: Starts the program. When communication is established the program begins executing and the controller icon turns green. The Start button changes to Stop on the program panel when the program is running.

Stop: Stops the program. Under conditions of normal program termination (stopped by the operator or completed as intended) the setpoint will be set to Final Soak. The Stop button on the Program panel changes to Start.

Help: Displays this help topic.

Start Program (Ctrl+A):

This menu selection is available only when a program has been stored in memory. This selection starts the program at the first program step. When the program is running, the controller icon is highlighted green indicating that communication is established.

If the program is successfully executing, this menu selection becomes unavailable to the operator and the Stop Program and Pause Program selections become available. The program control button on the program panel changes from Start to Stop. If communication fails the icon is highlighted in red.

Stop Program (Ctrl+O):

This menu selection becomes available once a program is stored in memory and started. Selecting this menu item stops the program. When stopped manually, the program sets the setpoint to the Final Soak value. The Stop button on the Program panel changes to Start when a program is stopped.

Pause Program (Ctrl+U):

This menu selection becomes available once a program is stored in memory and started. Selecting this menu item pauses the program. When paused, this menu item is checked and the program does not set the setpoint to any new values. To resume execution of the program, select pause again. A check mark at this menu item signifies that the program is paused. The program can be stopped when paused.

Sample Program

The following program ramps up from 20°C to 30°C in 30 minutes. It then soaks at 30°C for 10 minutes before it ramps back down to 20°C in 30 minutes. It is repeated two times for a total of three ramp-up/soak/ramp-down loops.

1) Enter "1" in the Step field.
2) Enter "20.0" in Begin Temp. and "30.0" in the End Temp. fields.
3) Enter "30" in the Time field and "0" in the #Loops field.
4) Select the Add button. This adds a line to the Program View Window.
5) Enter "2" in the Step field.
6) Enter "30" in the Begin Temp. and "30.0" in the End Temp. fields.
7) Enter "10" in the Time field and "0" in the #Loops field.
8) Select the Add button. This adds a second line to the Program View Window.
9) Enter "3" in the Step field.
10) Enter "30.0" in the Begin Temp. and "20.0" in the End Temp. fields.
11) Enter "30.0" in the Time field.
12) Enter "2" in the #Loops field and "1" in Loop To Step field.
13) Select the Add button. This adds a third line to the Program View Window.

Select the View button to view and start the program.

Alarms Menu

NEScom can be configured to generate warning messages when alarm conditions occur. Alarm setup can vary depending on which communication protocol is in use. In all cases an alarm point is stored within the Windows application. This alarm point may not necessarily be the alarm point of the actual product. All alarms can be enabled or disabled with a single menu selection.

When an alarm occurs, you are prompted with a pop-up message. This message displays the alarm description, the value read from the product and the alarm limit. Messages also display the icon description and location entered under icon properties. You must acknowledge this message and then have the option to disable the alarm.

NOTE: In all cases an alarm point is stored within the Windows application. This alarm point may not necessarily be the alarm point of the actual product.

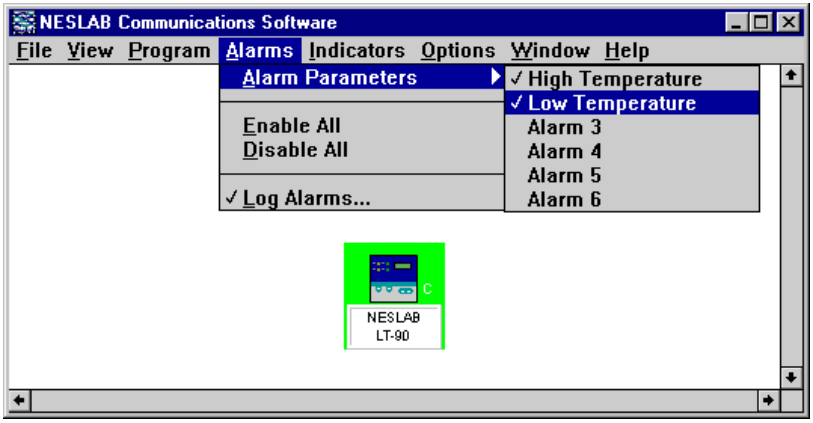

Alarm Parameters

NC Protocol

Select any alarm from the menu. The descriptions Alarm 1, Alarm 2, ... are default names which can be modified when configuring an alarm. Alarms are configured by first selecting a specific parameter from a list of ones supported, then entering a high limit and low limit for that parameter. Parameter units and precision match those of the actual product. High limit and low limit alarms can be later enabled or disabled by recalling the alarm from this menu. A check mark on an alarm description signifies that either limit or both limits are enabled.

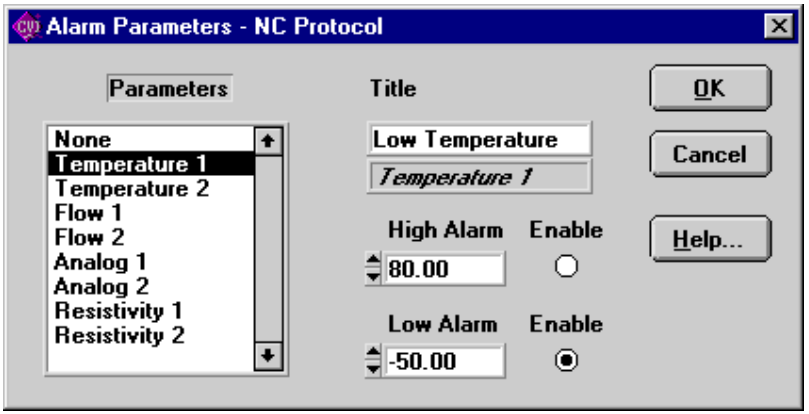

Parameters: Select the alarm parameter. If the parameter is not supported by the product then the reference field will read Not Supported.

Title: Enter a descriptive title for each alarm. This will appear as the new description for this menu item.

High Alarm: Enter the high limit. The alarm will activate when the parameter in question exceeds this limit.

Low Alarm: Enter the low limit. The alarm will activate when the parameter in question is lower than this limit.

Enable: Individually enables or disables each alarm.

Cancel: Cancels all changes made since the last save.

OK: Confirms the alarm configuration.

Microprocessor Protocol
Select from High Temperature, Low Temperature, High Remote Temperature or Low Remote Temperature alarm. Parameter units and precision match those of the actual product. A check mark on an alarm description signifies that it is enabled. Selecting an alarm menu item with a check mark disables the alarm. If the menu item is not checked, then the operator will be asked to enter the alarm limit. For convenience, the alarm limit is added to the description of the menu item. Not entering a value for the alarm limit when prompted skips the alarm setting.

MRS232C Protocol
Select from High Temperature or Low Temperature alarm. Parameter units and precision match those of the actual product. A check mark on an alarm description signifies that it is enabled. Selecting an alarm menu item with a check mark disables the alarm. If the menu item is not checked, then the operator will be asked to enter the alarm limit. For convenience, the alarm limit is added to the description of the menu item. Not entering a value for the alarm limit when prompted skips the alarm setting.

Enable All

Enables all defined alarms. See Alarm Parameters for individually enabling alarms.

Disable All

Disables all defined alarms. See Alarm Parameters for individually disabling alarms.

Log Alarms

NEScom provides the means to log all alarm messages to file. Select this menu item to create a log file. A file selection dialog box allows the operator to easily open a file for automatic logging. A check mark on this menu item signifies that an alarm log has been opened. Selecting this menu item with a check mark closes the alarm log.

Alarm log entries are stamped with the date and time of the alarm occurrence and the contents of the alarm message. The alarm log also indicates when an alarm was acknowledge.

NOTE: View the contents of the alarm log by selecting Alarm Log from the View menu.

NOTE: Print the contents of the alarm log by selecting Print from the File menu.

Indicators Menu

Indicators are graphical representations of data. Graphical formats such as gauges, thermometers and meters are linked to product parameters for greater visibility. An indicator is created by selecting the specific indicator from the menu. A check mark on the indicator menu item signifies that the indicator exists. Selecting a checked menu item deletes the indicator.

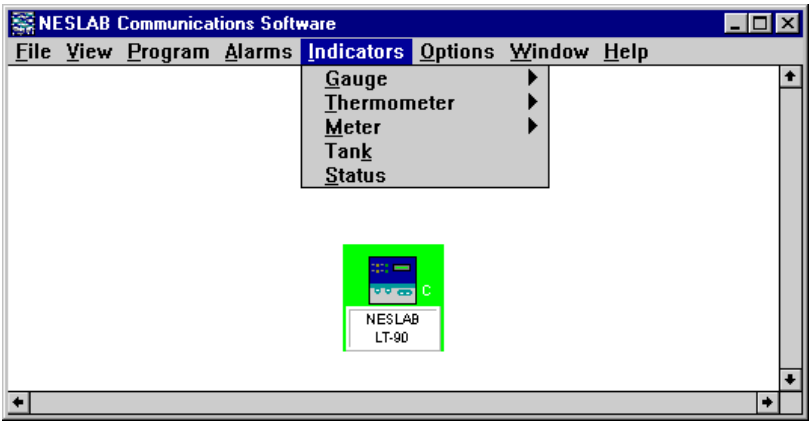

All indicators reside in an indicator widow. The sizable window is displayed when the first indicator for a controller icon is created. There is a unique indicator window for each controller icon. Indicators are dimmed for all controller icons other than the selected active icon.

Indicators can be moved within the indicator window with the cursor keys and sized with +/- (overall adjust), W/w (width adjust), or H/h (height adjust).

Left-Double-Click an indicator to configure the indicator range and title.

Indicators are outlined in red when they are out of range.

NC Protocol
Products supporting the NC protocol have greater flexibility when it comes to using indicators. These products support different subsets of the entire range of parameters supported in the NC protocol. Because of this, the operator has the ability to link any indicator to any parameter supported by the product.

Microprocessor Protocol
NESLAB's Microprocessor line of products provide temperature, setpoint, high limit and low limit values. Here, the thermometer indicators are linked to temperature and setpoint and the gauge indicators are linked to the temperature limit values.

MRS232C Protocol
Products supporting the MRS232C protocol only provide temperature and setpoint values so two thermometer indicators are available.

Gauge

A Gauge can be moved within the indicator window with the cursor keys and sized with +/- (overall adjust), W/w (width adjust), or H/h (height adjust). Left-Double-Click on a Gauge to configure its range and title.

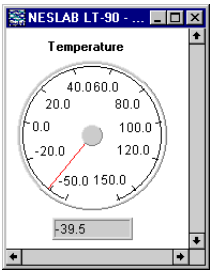

NC Protocol
When selecting either 1 or 2 from the Gauge menu item, the operator will be prompted to link a NC protocol parameter to the indicator.

Parameters: Choose a parameter from the list choices. Parameters that are referenced as Not Supported will not be linked to an indicator.

Label: Type a label for the indicator.

High Value: Enter a high value for the indicator.

Low Value: Enter a low end for the indicator.

Values outside the entered range make the indicator go out of range. This is illustrated by a red outline on the indicator.

Microprocessor Protocol
High Temperature

Low Temperature

MRS232C Protocol
Not Supported

Thermometer

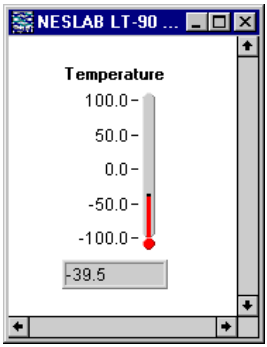

A Thermometer can be moved within the indicator window with the cursor keys and sized with +/- (overall adjust), W/w (width adjust), or H/h (height adjust). Left-Double-Click on a Thermometer to configure its range and title.

NC Protocol
When selecting either 1 or 2 from the Thermometer menu item, the operator will be prompted to link a NC protocol parameter to the indicator.

Parameters: Choose a parameter from the list choices. Parameters that are referenced as Not Supported will not be linked to an indicator.

Label: Type a label for the indicator.

High Value: Enter a high value for the indicator.

Low Value: Enter a low end for the indicator.

Values outside the entered range make the indicator go out of range. This is illustrated by a red outline on the indicator.

Microprocessor Protocol
Temperature

Setpoint

MRS232C Protocol
Temperature

Setpoint

Meter

A Meter can be moved within the indicator window with the cursor keys and sized with +/- (overall adjust), W/w (width adjust), or H/h (height adjust). Left-Double-Click on a Meter to configure its range and title.

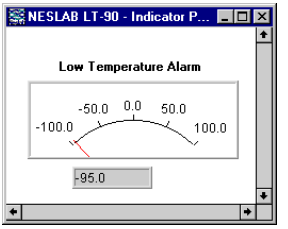

NC Protocol
When selecting either 1, 2, 3 or 4 from the Meter menu item, the operator will be prompted to link a NC protocol parameter to the indicator.

Parameters: Choose a parameter from the list choices. Parameters that are referenced as Not Supported will not be linked to an indicator.

Label: Type a label for the indicator.

High Value: Enter a high value for the indicator.

Low Value: Enter a low end for the indicator.

Values outside the entered range make the indicator go out of range. This is illustrated by a red outline on the indicator.

Microprocessor Protocol
Not Supported

MRS232C Protocol
Not Supported

Tank

A Tank can be moved within the indicator window with the cursor keys and sized with +/- (overall adjust), W/w (width adjust), or H/h (height adjust). Left-Double-Click on a Tank to configure its range and title.

NC Protocol
When selecting the Tank menu item, the operator will be prompted to link a NC protocol parameter to the indicator.

Parameters: Choose a parameter from the list choices. Parameters that are referenced as Not Supported will not be linked to an indicator.

Label: Type a label for the indicator.

High Value: Enter a high value for the indicator.

Low Value: Enter a low end for the indicator.

Values outside the entered range make the indicator go out of range. This is illustrated by a red outline on the indicator.

Microprocessor Protocol
Not Supported

MRS232C Protocol
Not Supported

Status

Select Status from the Indicator menu bar to view a product's predefined status conditions. Status flags indicate faults, warnings and other system conditions, and typically vary from product to product. Reference the product owners manual for the definition of status bits.

NC Protocol
Up to 16 status fields can be predefined for a product. These fields are labeled for specific products that report their status. When viewing status for a Generic NC icon, the operator will see that the labels for the status fields are generic as well. These labels can be modified by selecting the field and typing the status label name.

Microprocessor Protocol
Not Supported

MRS232C Protocol
Not Supported

NC Protocol Parameters

The NC protocol is designed to acquire all possible parameter values from NESLAB proprietary controllers. Most (if not all) products supporting the NC protocol use only a subset of the entire function set. When linking an indicator or chart parameter to a protocol parameter for a given product, only those parameters supported by the product are possible parameter choices.

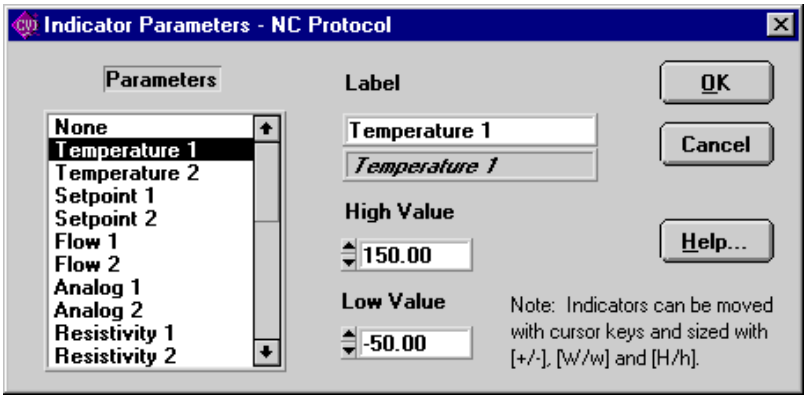

Supported Parameters:

Temperature 1

Temperature 2

Setpoint 1

Setpoint 2

Flow 1

Flow 2 (future expansion to Flow 10)

Analog input 1

Analog input 2

Resistivity 1

Resistivity 2

Supported Alarm Points:

Temperature 1 (high low)

Temperature 2 (high low)

Flow 1 (high low)

Flow 2 (high low)

Analog input 1 (high low)

Analog input 2 (high low)

Resistivity 1 (high low)

Resistivity 2 (high low)

Options Menu

Select Options from the menu bar to configure and reset the COM port.

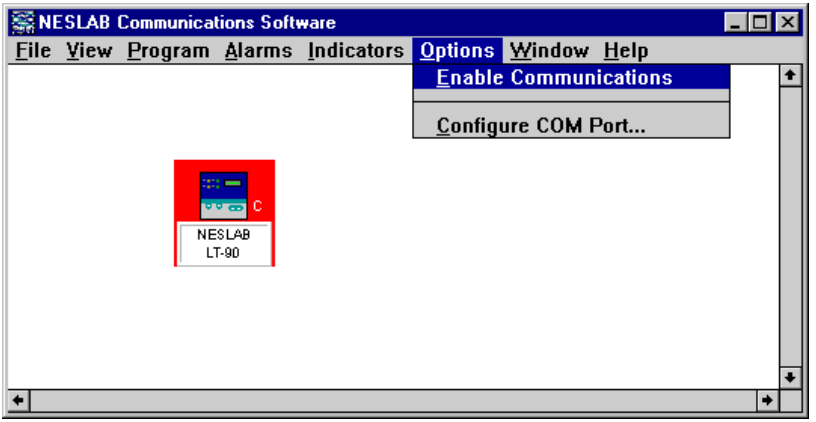

Enable Communications

Select this menu item to re-enable serial communications following a communications time-out error. This can also be done from the properties panel and the communications panel. A controller icon with a red background signifies that there has been a communications error. Once the COM port has been re-initialized, the product is polled by NEScom in order to establish contact. A controller icon with a yellow background signifies that it is polling the product. The icon will remain yellow until contact is made.

Configure COM Port

Select this menu item to configure the communications port. The control for enabling communications is available only when there has been a communications time-out error. Under normal operating conditions this control is dimmed and gives the current communication status. Enabling communications re-initializes the COM port.

Communication is normally disabled when NEScom is not requesting parameters from the product. Once you configure NEScom to request data from the product communication is automatically enabled.

Select the Default button to set suggested RS232 settings for the protocol in use.

MRS232/RS232: 300 Baud, 8 data bits, 1 stop bit, no parity, polling interval 1.0 second.

MICROprocessor Bath: 4800 Baud, 8 data bits, 1 stop bit, no parity, polling interval 1.0 second.

NC Protocol: 9600 Baud, 8 data bits, 1 stop bit, no parity, polling interval 1.0 second.

Start-up configuration: Port: COM2, 9600 Baud, 8 data bits, 1 stop bit, no parity, polling Interval 1.0 second.

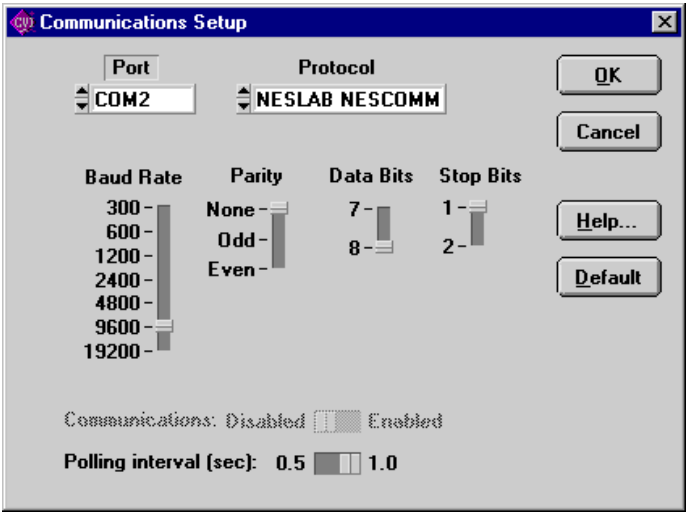

Window Menu

Select Window from the menu bar for arranging icons and restoring window panels.

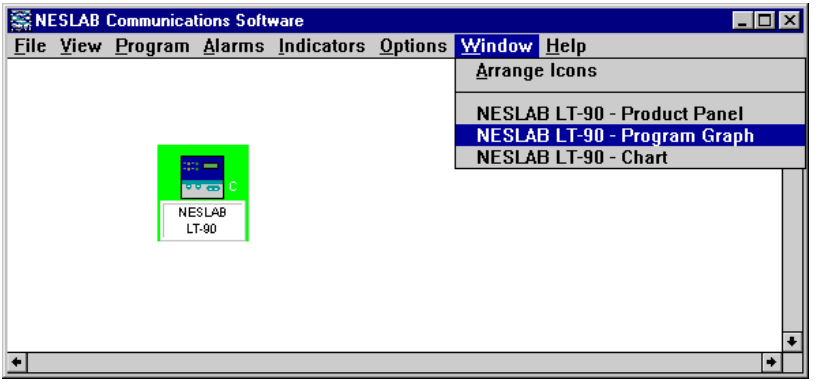

Arrange Icons

Select this menu to arrange controller icons in the NEScom main window panel.

Moving an Icon
Icons can be moved within the main window. Clicking on the icon changes the cursor to a pointing finger cursor. Moving the cursor to the top edge of the icon changes the cursor back to the default style. When the cursor changes back to the default style, click and drag the icon to move it.

Window Panels

Lists all window panels opened. Click on the window panel description to bring the panel to the front or restore a panel when minimized. If there are no window panels opened then this section of the menu is empty.

Help Menu

Select this menu item for help in operating NEScom. Help is based on the menu selections of the program. Help buttons on various panels provide a shortcut to a help topic. Get to detailed information on a topic by clicking on help links.

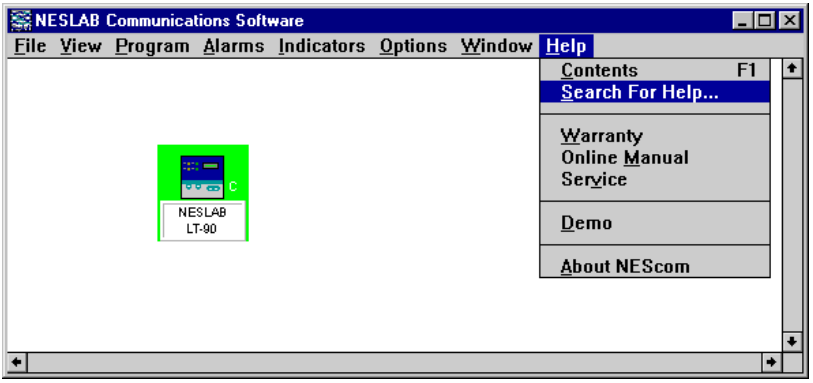

Contents

The contents of Help is based on the menu bar of NEScom. Selecting this menu item brings up the HELP utility. Use the Tab key to scroll through the HELP contents or double-click on a topic to view that specific help screen.

Search

Search on a Help topic. Start by typing the first few letters of the word to search. Click on a topic within the list of topics appearing in the text box. Once a topic is selected, click on Display to get help on the topic.

Warranty

Select this menu item to read the NESLAB warranty statement for NESLAB products.

On Line Manual

NESLAB provides on-line manuals which can be downloaded to your computer.

Online documentation may be obtained 24 hours a day, 7 days a week from NESLAB ONLINE, our public, online service support system. NESLAB ONLINE is a FirstClass(r) system and we recommend using FirstClass(r) Client software (see below).

Access to NESLAB ONLINE is available in 13 simultaneous native languages: Brazilian (dialect of Portuguese), Danish, English, Finnish, French (Canadian), French (Parisian), German, Italian, Japanese, Norwegian, Portuguese, Spanish and Swedish.

Access is by direct dial-up only at (603) 427-2490.

We recommend using FirstClass(r) Client software (see below) to access NESLAB ONLINE. Generic VT-100 terminal emulation may be used by specifying 8-N-1 protocol, but be aware that the graphical user interface, color, fonts, sound, teleconferencing, some e-mail features, and native language access will not be available.

When connecting, you will be asked to establish a User ID and password. Whatever you choose will become your User ID and password.

Online operation manuals may be found at: Conferences / Operating Manuals

Online service manuals may be found at: Conferences /Service

FirstClass(r) Client software is free and available for Macintosh or Windows (3.x or '95). The software is available from many sources:

AMERICA ONLINE: go to keyword "SOFTARC" then select "FirstClass software"

COMPUSERVE: Mac client is at TWEUROPA /Teletools /fcmac.zip

Windows client is at PCBBS/BBS programs /FCC300.exe

WEB: download from http://www.softarc.com/try.htm

CD-ROM: Mac client is on the companion CD-ROM to the book "Macintosh Revelations" by Ken Maki.

Mac client is on the companion CD-ROM to the magazine "Mac Addict", Sept. 1996 issue.

Mac client is on most CD-ROMs produced by BMUG.

We are not aware of the Windows client on any CD-ROM.

NESLAB ONLINE: Mac client is at: Conferences / Software / Mac / FirstClass Client

Windows client is at: Conferences / Software / Windows / FirstClass English

By mail: let us know and we will mail you a disk. Specify Mac or Windows.

Note to MAC users: The application FirstClass Client may be run directly off the floppy. It need not be copied to your hard drive

Service

NEScom provides a means for logging information on a product. This simple interface keeps a record of any service information for a product, like RMA numbers, and logs the date automatically. The name field must be filled in for the entry to be added to the log.

A log entry is created by typing your name, the description of the problem, then clicking on Add to write the entry to the log. Select Close to abort entering data.

Demo

A mock controller can be used in place of an actual product to demonstrate NEScom features. Select Demo from the Help menu and a controller box will appear. When a demo-controller is created, the Demo menu item has a check mark. Selecting this menu item with a check mark removes the demo-controller.

Rather than issuing commands over the communications interface to an actual product, commands are intercepted and values from the demo controller driver are used. Bring up charts and indicators, run programs and setup alarms just as if an actual product existed.

First create a product icon, or open a file to restore a previously saved workspace, then bring up the demo-driver. A pop-up message will prompt for the temperature units. Select Fahrenheit, Celsius or Cancel from bringing up the demo.

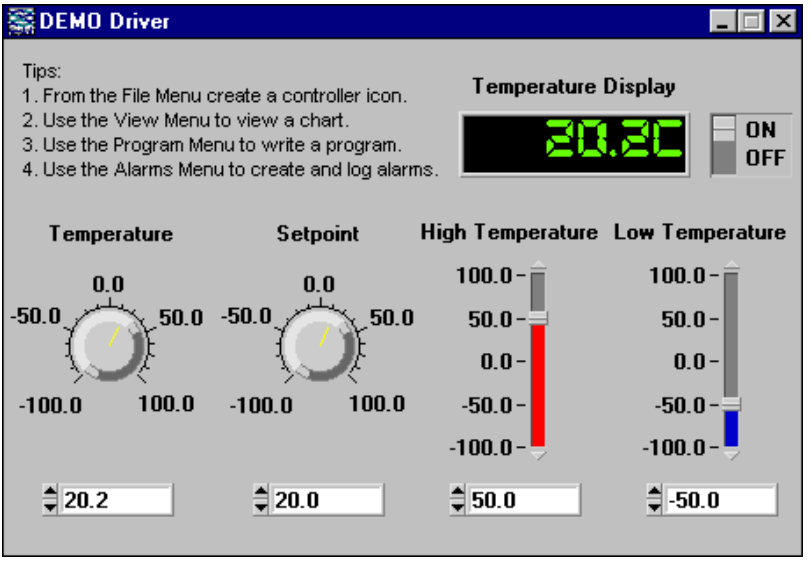

Turn the DEMO ON!
You interact with the demo just like an actual product. Switch the ON/OFF switch to the ON position. The temperature follows the setpoint within a half of a degree of error. With the switch in the OFF position you can manually vary the temperature.

The following parameters are available for demonstration:

ON/OFF: Starts and stops the controller. When the DEMO controller is ON, temperature follows the setpoint with a small margin of error. This allows you to create and view a program, or view a chart of temperature and setpoint. With the DEMO controller OFF, you can manually adjust the setpoint.

Temperature Display: Displays the temperature value.

Temperature: Enter a value for temperature or use the controls to vary the parameter.

Setpoint: Enter a value for setpoint or use the controls to vary the parameter.

High Temperature Limit: Enter a value for the high temperature limit or use the controls to vary the parameter.

Low Temperature Limit: Enter a value for the low temperature limit or use the controls to vary the parameter.

About

This displays copyright and license information relative to NEScom. Make reference to this information when contacting NESLAB support.

Glossary

MICROprocessor Protocol: A communications protocol implemented on NESLAB's microprocessor line of baths and chillers. Supports Delta-Temp.

MRS232C Protocol: Term used to describe the protocol used with NESLAB's MRS232C/RS232C apparatus for RS232 communications on NESLAB's digital line of products. Supports Delta-Temp.

NEScom : Windows application which communicates with supporting NESLAB products.

NC Protocol: A generic communications protocol designed to acquire parameter values from NESLAB products supporting the protocol (5/97).

Read Only: When in read only mode, NEScom can only query a product for information and not perform any intrusive setting of product parameters (like temperature setpoint). Read Only mode is disabled by entering the correct password in the Properties Panel and selecting No on the Read Only switch.

With Read Only mode selected:

Programs cannot be started.
Setpoint cannot be changed from Product Panels.
Product Panel buttons are disabled.

Workspace: A workspace is made up of one or more controller icons. If one is already active, NEScom will prompt you to save the current workspace before a new one is defined or loaded. All icons are cleared when a new workspace is created. Once new controller icons are added, the workspace can be saved.

Software Warranty

The media on which you receive NEScom are warranted not to fail to execute programming instructions, due to defects in materials and workmanship for a period of 90 days from the date of shipment. NESLAB Instruments will, at its option, repair or replace software media that do not execute programming instructions if NESLAB Instruments receives notice of such defects during the warranty period. NESLAB Instruments does not warrant that the operation of the software shall be uninterrupted or error free.

NESLAB Instruments believes that the information in this manual is accurate. The documentation has been carefully reviewed for technical accuracy. In the event that technical or typographical errors exist, NESLAB Instruments reserves the right to make changes to subsequent editions of this document without prior notice to holders of this addition. The reader should consult NESLAB Instruments if errors are suspected. In no event shall NESLAB Instruments be liable for any damages arising out of or related to this document or the information contained in it.

NESLAB ASSUMES NO RESPONSIBILITY FOR INCIDENTAL, CONSEQUENTIAL, OR OTHER DAMAGES INCLUDING, BUT NOT LIMITED TO LOSS OR DAMAGE TO PROPERTY, LOSS OF PROFITS OR REVENUE, LOSS OF THE UNIT, LOSS OF TIME, OR INCONVENIENCE.

The warranty provided herein does not cover damages, defects, malfunctions or service failures caused by the owner's failure to follow NESLAB Instruments installation or operation instructions.

Blank page

NEScom Software Registration

To validate the warranty and to keep you updated, please complete the information and return it to:

NESLAB Instruments
Software Registration
Attention: Marketing Department
P.O. Box 1178
Portsmouth, NH 03802-1178 USA

You may mail this information or fax it to 603 436-8411. Thank you.

Name (First/Last) _____

Company Name _____

Company Division or Mailstop _____

Street Address _____

City/Zip _____

State or Province _____

Country _____

Software Name & Version _____

Date Software Received (Month/Date/Year) _____

What is your application for using this software product.

_____

_____

Please comment or give any suggestions you may have regarding this software.

_____

_____

NEScom Software License Agreement

Carefully read this license agreement before opening this software or using NEScom Software.

Opening the sealed packet containing the software or using the software indicates acceptance of this license agreement. If the terms are not acceptable, contact NESLAB Customer Support at 1-800-4-NESLAB.

Ownership
NEScom Software programs and all accompanying materials are owned by NESLAB Instruments. They are protected by United States copyright laws, by laws of other nations, and by international treaties.

License
NESLAB Instruments licenses each copy of the NEScom Software for a single computer. Load NEScom into permanent memory of only one computer and only use that copy on that same computer. Do not install NEScom Software on a network.

Use and Transfer Restrictions
Do not copy NEScom Software except when making one copy for backup or archival purposes. Transferring the NEScom Software to a single hard disk is allowed provided the original is kept solely for backup, or archival purposes. Do not copy any of the written materials. Do not transfer, or assign the NEScom diskettes to any another user.

Do not reverse engineer, decompile or disassemble the Software.

HX Series
Recirculating Chiller
Remote Condenser

NESLAB Manual P/N 002001
Rev. 07/15/98

Site Preparation and Installation Manual



NESLAB online
Product Service Information, Applications Notes, MSDS Forms, e-mail.

Call our bulletin board system
(603)427-2490
Contact us for free access software.

Voice Info: (800) 4-NESLAB

Comments on this manual can be sent to:

NESLAB@neslabinstruments.com

or visit our Web page at:

http://www.neslabinc.com

HX Series Recirculating Chiller Remote Condenser Site Preparation and Installation Manual

Table of Contents

PREFACE

Compliance 2
Unpacking 2
Installation Assistance 2

SECTION I
General Information

Objective 3
Overview of Responsibilities 3

SECTION II
Safety

Warnings 5

SECTION III
Installation

Accessibility 5
Site 7
Electrical Requirements 13
Refrigeration Requirements 14
Inspections 18
Refrigeration Diagram HX-150 19
Refrigeration Diagram HX-200 through HX-900 20

SECTION IV
Warranty 21

Preface

Compliance

The CE label on the rear of the unit identifies products tested and found to be in compliance with the requirements defined in the EMC standards defined by 89/336/EEC. The testing has demonstrated compliance with the following standards:

EMC:

EN 55011, Class A Verification	Industrial, Scientific and Medical Emissions
IEC 801-2: 1991	Electro-Static Discharge
IEC 801-3: 1988	Radiated Electromagnetic Field
IEC 801-4: 1988	Conducted Electrical Fast Transient/Burst

For any additional information refer to the Letter of Compliance that shipped with the unit.

Unpacking

Unless it is otherwise impractical because of doorway or passage constraints, do not remove the remote condenser or the base unit from their shipping crates (or cartons) before the components are in their final location and are ready to be installed.

Retain all cartons and packing material until the unit is operated and found to be in good condition. If the unit shows external or internal damage, or does not operate properly, contact the transportation company and file a damage claim. Under ICC regulations, this is your responsibility.

Installation Assistance

NESLAB is committed to providing complete technical support throughout the installation process. We understand that the ability to complete an installation project on schedule is a large factor in the success of a remote condenser installation. We will cooperate fully with the customer to ensure that the installation proceeds smoothly and that you receive the prompt, courteous service and high quality product that you deserve.

This manual addresses the major considerations involved in site preparation and component installation. However, due to the large number of options available with our recirculating chillers and the many variables involved in installing a remote condenser, additional information may be necessary. If you have questions concerning the installation of your components, the information in this manual, or the installation process in general, please contact our Sales Department for assistance.

Section I General Information

Objective

This manual is intended as a guide to assist the NESLAB customer in selecting and preparing a site, and installing a remote condenser to an HX Series Recirculating Chiller. The focus of the manual is on the installation of the remote condenser in conjunction with the base unit (chiller).

This manual is not intended as a guide for installing the base unit to the instrument being cooled; this information is contained in the operation manual and is shipped with the base unit. Operation and maintenance instructions for the remote condenser are also included in the chiller's operation manual.

Overview of Responsibilities

In an effort to make the installation proceed as smoothly as possible, as well as, specify contractual responsibilities, the following overview is provided. The overview outlines both NESLAB's and your responsibilities during and after the installation process. Exceptions or deviations from these responsibilities must be approved, in writing, by NESLAB prior to installation.

NESLAB provides the base unit with a full charge of refrigerant, the remote condenser, and complete specifications on the installation of the remote condenser and its connection to the base unit.

The complete installation specifications are provided in two ways: the Site Preparation and Installation Manual; and the technical support provided by NESLAB's Sales, Service, and Engineering Departments.

After installation, an on-site inspection and certification by a NESLAB service technician is required to validate the warranty on the refrigeration system components.

The on-site inspection includes a complete inspection for conformance with the requirements outlined in this manual, evacuating the refrigerant lines between the condenser and the base unit, performing the initial start up of the unit, and providing any additional education requested concerning the operation or maintenance of the system.

You are responsible for providing all electrical connections and the proper voltage source, all refrigeration plumbing between the base unit and the remote condenser (including piping, valves, adequate venting, and a complete leak check of all tubes and joints), and all site requirements (service access, concrete pads, mounting hardware, etc.).

The corresponding chapters in this manual describe each of these requirements.

In addition, you are responsible for obtaining all licenses and approvals required for the installation, and installing the unit in compliance with all applicable construction codes.

The base unit and remote condenser have a one-year warranty against defective parts and workmanship from date of written approval certifying the installation. The warranty does not cover customer-installed parts or the workmanship of their installation. See the back page for complete details.

For long term reliable operation, the system must be maintained on a regular basis (see base unit operator's manual for service and maintenance procedures). If customer-provided care is not practical, contact the Service Manager at our Headquarters in New Hampshire for complete on-site service contract information. Failure to properly maintain the system can cause damage and may void the manufacturer's warranty.

Section II Safety

Warnings

Make sure you read and understand all instructions and safety precautions listed in this manual before installing your unit. If you have any questions concerning the installation of your unit or the information in this manual, please contact our Sales Department for assistance.

Performance of installation procedures other than those described in this manual may result in a hazardous situation and may void the manufacturer's warranty.

Transport the components with care. Sudden jolts or drops can damage the refrigeration lines.

Observe all warning labels.

Do not remove warning labels.

In addition to the safety warning listed above, warnings are posted throughout the manual. These warnings are designated by an exclamation mark inside an equilateral triangle with text highlighted in bold print. Read and follow these important instructions. Failure to observe these instructions can result in permanent damage to the unit, significant property damage, or personal injury or death.

Section III Installation

Accessibility

The installation site must be accessible from the delivery location. Ensure there is adequate clearance from the delivery location throughout the access route. Most units will require either a forklift or hydraulic pallet mover, which must be considered when calculating accessibility.

If the installation site is at a different level from the delivery location, be sure the lifting equipment, for example, an elevator, is rated to handle the combined size and weight of the unit and the moving equipment.

Refer to Table 1 to identify the specific size and weight of your components.

The exact method of handling and setting the unit depends on available equipment, size of unit, final location, and other variables. Use judgement to determine the specific method of handling the unit. All units are shipped on heavy skids and crated. Generally, it is advisable to bring the unit as close to its final location as possible before removing the crating. Units are provided with lifting ears near the four corners. Under no circumstances should the coil headers or return bends be used for moving the unit.





Contractor supplied spreader bars must be used and a safety sling should be used when lifting.

Table #1:

Base Unit

	HX-150	HX-200/HX-300	HX-500/HX-750	HX-900
Unit Dimensions (H x W x D) *Inches* *Centimeters*	39⅝ x 26¼ x 21⅛ 101 x 67 x 54	45¾ x 33¾ x 25¼ 117 x 86 x 64	50⅝ x 46 x 28¾ 128 x 117 x 73	
Crate Dimensions (H x W x D) *Inches* *Centimeters*	49 x 33 x 29 125 x 84 x 74	55 x 40 x 33 140 x 102 x 84	61 x 53½ x 36 155 x 136 x 91	
Shipping Weight *Pounds* *Kilograms*	320 145	505 229	800 362	1000 453

Remote Condenser

	HX-150/HX-200	HX-300	HX-500	HX-750	HX-900
Condenser Dimensions[1] (H x W x D) *Inches* *Centimeters*	28 x 22 x 37½ 71 x 56 x 95	44½ x 43 x 39¾ 113 x 109 x 101	44½ x 43 x 49¾ 113 x 109 x 126	44½ x 43 x 69¾ 113 x 109 x 177	50 x 45½ x 125 127x115.6x317.5
Crate Dimensions[2] (H x W x D) *Inches* *Centimeters*	54 x 31 x 52 137 x 79 x 132	54 x 51 x 52 137 x 130 x 132	54 x 51 x 61 137 x 130 x 155	54 x 51 x82 137 x 130 x 208	**NOT AVAILABLE**
Unit Weight *Pounds* *Kilograms*	114 51.7	180 81.6	260 117.9	470 213.1	700 317.5
Shipping Weight *Pounds* *Kilograms*	345 156	345 156	395 179	525 238	870 395

1. The height of the condenser for models HX-500 and HX-750 when mounted for vertical air flow is adjustable from 44½ inches (113 centimeters) to 54¾ inches (139 centimeters). The flow adjustment for HX-900 units is 50 inches (127 centmeters) to 62 inches (157.5 centimeters)
2. Crate dimensions are approximate.

Site

Base Unit

The base unit should be located in an area where ambient temperatures are inside the range of +55°F to +95°F (+13°C to +35°C).

The site must be large enough to allow free access on all four sides of the unit. A minimum clearance of 3 feet (1 meter) on all four sides is required. Refer to Table 1 to determine the width and depth of your base unit.

If these dimensions are not possible, consult our Sales Department for assistance.

The base unit must be in a location with adequate ventilation to discharge heat generated by the recirculation pump and other components. Typically, ventilation for a unit with the minimum access clearance in a room of 500 feet^2 (46.5 meters^2) or more is considered adequate. Additional ventilation may be required if the access clearance is compromised or the site is less than 500 feet^2 (46.5 meters^2).



Never place the base unit in a location where excessive heat, moisture, or corrosive materials are present.

Special attention should be given to the unit's location and position. The operator panel is located on the front of the unit. The remote condenser and refrigerant relief valve connections are located on the right side of the unit. Position the unit so the operator controls are convenient to the user and the remote condenser and relief valve connections can be easily accessed during installation or for future servicing.

Damage can occur to the plumbing that connects the base unit to the remote condenser if the base unit is bumped or jolted from its site. Provisions should be made to prevent the unit from being moved after installation. Once the unit is plumbed, lower the adjustable feet on the unit's base. If the unit is located in a heavy traffic area where the possibility of collision is imminent, secure the unit using blocks or mounting brackets.

Remote Condenser

The remote condenser should be located on a well-constructed, level surface, able to withstand the distributed weight of the condenser and the mounting hardware. The ambient temperature of the site should be within the range of -10°F to +110°F (-23°C to +43°C).

Remote condensers for HX-150s, HX-200s, and HX-300s are available with vertical airflow only. Condensers for HX-500s, HX-750s and HX-900s are available with either horizontal or vertical airflow.

Vertical airflow units should be located no closer than the width of the unit from a wall or other obstruction. Increased distance is preferred whenever possible. Sufficient free area should be left around and below the unit to avoid air restriction to the coil.

For multiple units placed side by side, the minimum distance between the units is the width of the largest unit. If the units are placed end to end, the minimum distance between the units is four feet.

If the unit is placed in a pit, the top of the unit should be level with the top of the pit and the side distance increased to twice the width. If the top of the unit is not level with the top of the pit, discharge cones or stacks must be used to raise discharge air to the top of the pit. This is a minimum requirement.

If the unit is placed behind a fence, the fence must have a 50% free area, with a one foot (minimum) undercut. The unit cannot be closer than the width of the unit to the fence, nor should the top of the fence exceed the height of the unit. If these requirements are not used, the unit must be installed like a unit in a pit.

Horizontal airflow units should be installed with the coil (inlet air side) facing the prevailing winds. If the coil faces a wall, there must be a minimum clearance of 4 feet (1.2 meters) for adequate air flow. Increased distance is preferred whenever possible.



Inadequate air flow will cause a reduction in cooling capacity and, in extreme cases, refrigeration system failure.

The remote condenser must be securely mounted to the foundation on which it is installed (concrete pad, rooftop, etc.). The condenser frame has holes that allow the condenser to be lag bolted to its foundation. Refer to Figures 1 through 6 to identify the minimum pad size and the bolt pattern details for your remote condenser. Concrete slabs used for unit mounting should be installed level and be properly supported to prevent settling. We recommend a one-piece concrete slab with footings extended below the frost line.

Roof-mounted units should be installed level on steel channels or an I-beam frame to support the unit above the roof. Use of vibration pads or isolators is recommended. The roof must be strong enough to support the unit's weight.

Install units away from occupied spaces and above or outside utility areas, corridors, and auxiliary spaces to reduce the transmission of noise and vibration to occupied spaces. Refrigeration piping should be flexible enough to prevent the transmission of noise and vibration from the unit into the building. If the refrigeration lines are to be suspended from the building's structure, isolation hangars should be used to prevent vibration transmission. Where piping passes through the wall, pack fiberglass and sealing compound around the lines to minimize vibration and retain flexibility in the lines.

Figure #1:
HX-150/HX-200
(Vertical air flow condenser)

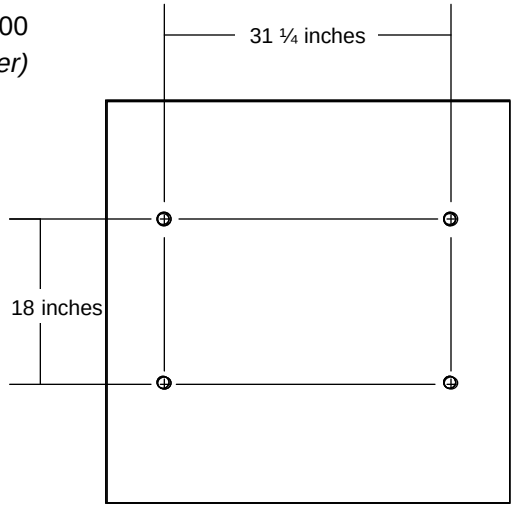

Minimum pad size: 44 inches x 44 inches (112 centimeters x 112 centimeters)

Lag bolt quantity and size: Four (4) 3/8 inch diameter bolts are required to secure the condenser.

Figure #2:
HX-300
(Vertical air flow condenser)

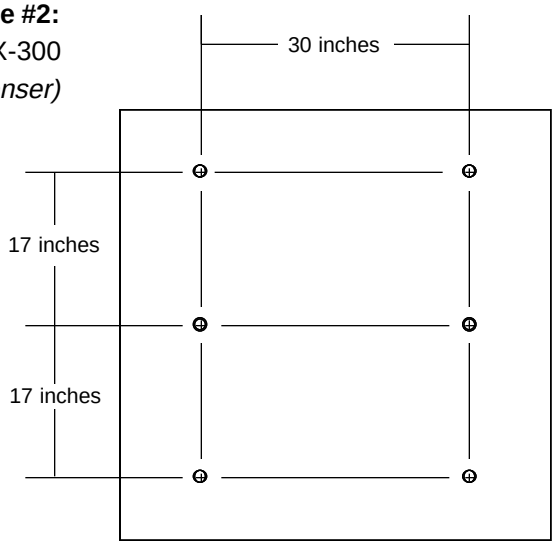

Minimum pad size: 48 inches x 48 inches (122 centimeters x 122 centimeters)

Lag bolt quantity and size: Four (4) ½ inch diameter bolts are required to secure the condenser, six (6) bolts are recommended.

Figure #3:
HX-500
(Vertical air flow condenser)

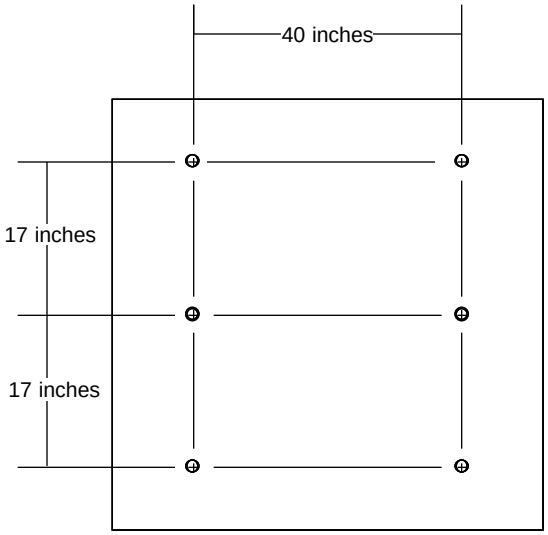

Minimum pad size: 58 inches x 58 inches (147 centimeters x 147 centimeters)

Lag bolt quantity and size: Four (4) ½ inch diameter bolts are required to secure the condenser, six (6) are recommended.

Figure #4:
HX-500
(Horizontal air flow condenser)

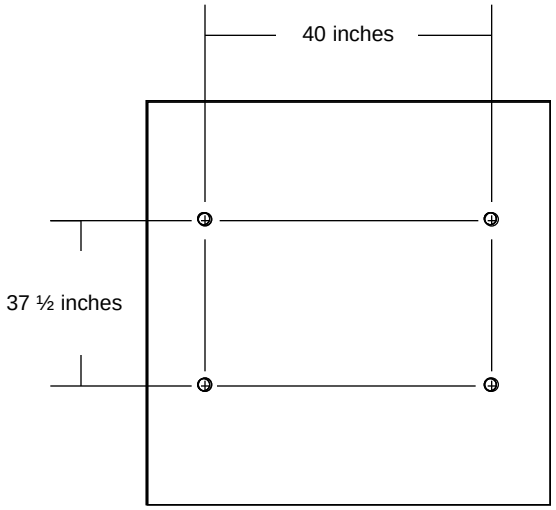

Minimum pad size: HX500 - 58 inches x 58 inches (147 centimeters x 147 centimeters)
HX 900 - 59 inches x 120 inches (150 centimeters x 305 centimeters)

Lag bolt quantity and size: Four (4) ½ inch diameter bolts are required to secure the condenser.

Figure #5:
HX-750
(Vertical air flow condenser)

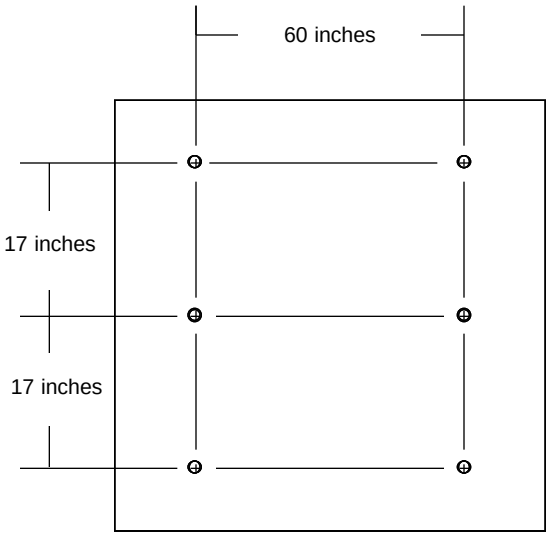

Minimum pad size: 58 inches x 68 inches (147.3 centimeters x 172.7 centimeters)

Lag bolt quantity and size: Four (4) ½ inch diameter bolts are required to secure the condenser, six (6) bolts are recommended.

Figure #6:
HX-750
(Horizontal air flow condenser)

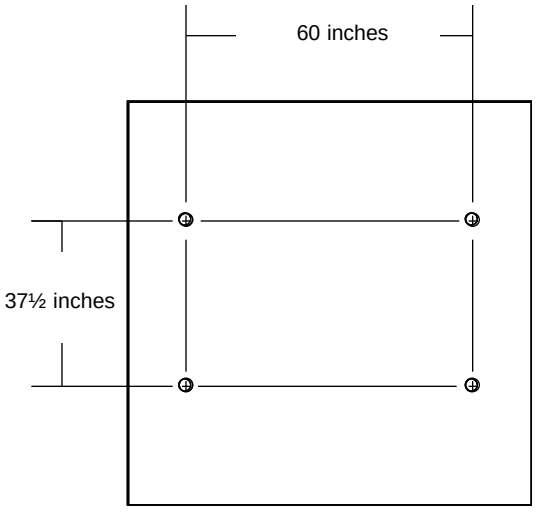

Minimum pad size: 58 inches x 68 inches (147.3 centimeters x 172.7 centimeters)

Lag bolt quantity and size: Four (4) ½ inch diameter bolts are required to secure the condenser.

Figure #7:
HX-900
(Vertical air flow condenser)

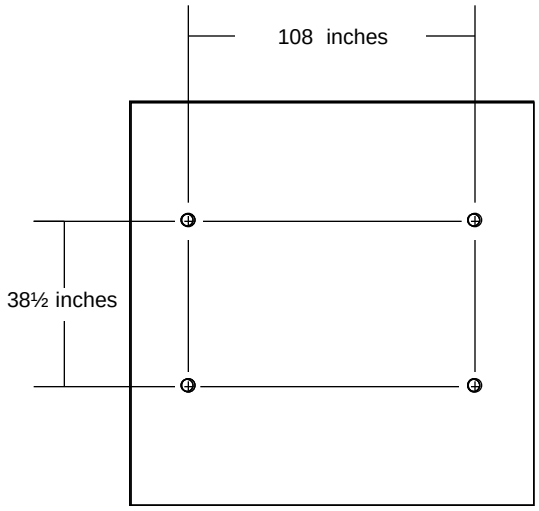

Minimum pad size: 48 inches x 116 inches (121.9 centimeters x 294.6 centimeters)

Lag bolt quantity and size: Four (4) ½ inch diameter bolts are required to secure the condenser.

Figure #2:
HX-900
(Horizontall air flow condenser)

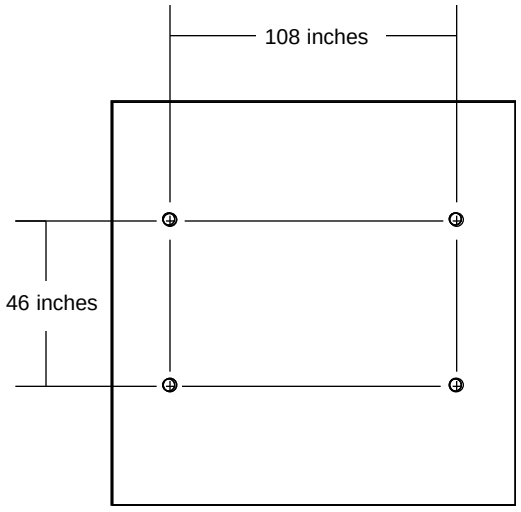

Minimum pad size: 50 inches x 116 inches (127 centimeters x 294.6 centimeters)

Lag bolt quantity and size: Four (4) ½ inch diameter bolts are required to secure the condenser.

Electrical Requirements

An electrical connection must be made from the remote condenser to the HX unit. The correct terminal board on the HX used for the electrical connections is found in the pull box and can be identified by locating the yellow sticker labelled:

ELECTRICAL CONNECTIONS FOR CONDENSER

The exact location of the sticker varies with the unit size.

The electrical requirements listed below in Table 2 are typical for each of the model sizes indicated. The requirements may vary depending on the size of the pump and compressor in your unit. Consult your NESLAB Sales Representative to verify the specific electrical requirements of your unit.

Table #2:

	HX-150	HX-200	HX-300/HX-500	HX-750	HX-900
Volts	220-240	208-230	208-230	208-230/460	
Hertz	50	60	60	60	
Phase[1]	1	1	3	3	
FLA Amps[2]	2.0		2.6	5.2/2.6	10.4/5.2
Number of fans	1			2	4
Fan Horsepower	0.25		0.33		
Minimum AWG	Consult local electrical codes				
Number of Conductors					

1. Consult your NESLAB Sales Representative for information on the specific phase requirements of your system.
2. Amp rating is for the remote condenser only. The requirements for the HX unit vary depending on the size of the pump and compressor. Consult your NESLAB Sales Representative to verify the specific electrical requirements of your unit.
3. All electrical connections must be made to the terminal blocks located inside the pull box on the HX unit.

Make sure the voltage of the power source agrees with the unit's voltage and frequency rating. The unit is designed to tolerate deviations of ±10% from the rated line voltage.

A qualified electrician must make the electrical connections for both the base unit and the remote condenser. A wiring diagram is provided to assist electrical installation. If additional information is necessary, contact our Sales Department.

Wire the electrical connections in conformance with local, state, and federal codes. Double check all wiring to make sure it is properly connected and protected from the elements.

Refrigeration Requirements

The base unit is equipped with isolation valves and is shipped with a full refrigerant charge.

The refrigeration lines that connect the base unit and the condenser, and the physical connection of the two components are the customer's responsibility. Use the flow diagram below to assist plumbing installation. If further information is necessary, contact our Sales Department.

Do not operate ball valves, refrigerant escape and system contamination will result.

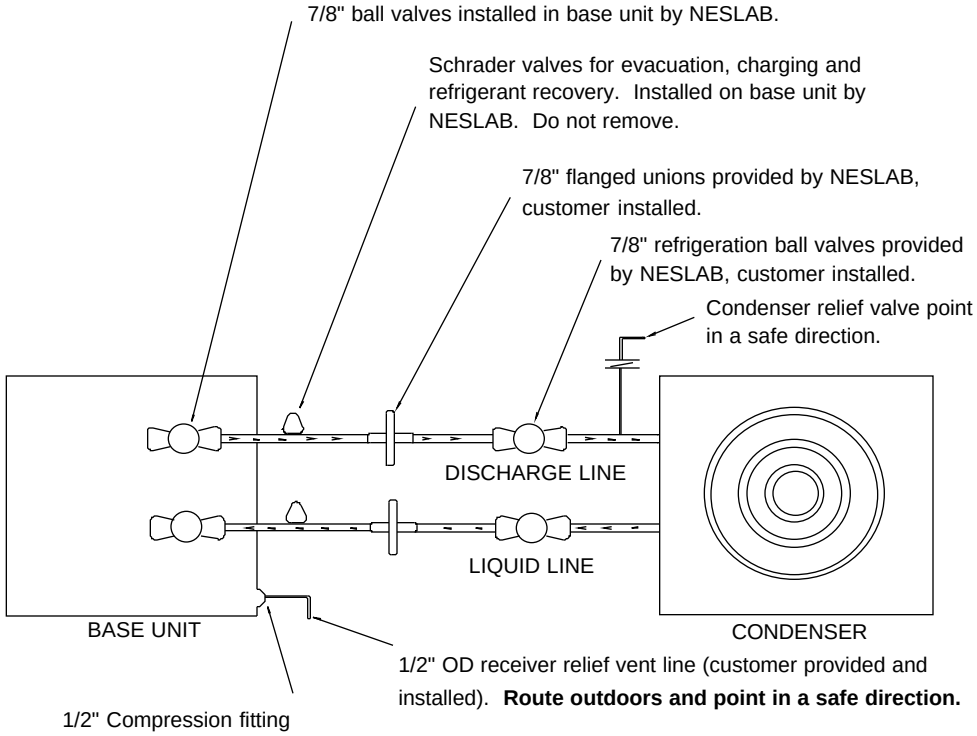

Refer to Table 3 to determine the location of the refrigeration line connections on the base unit.

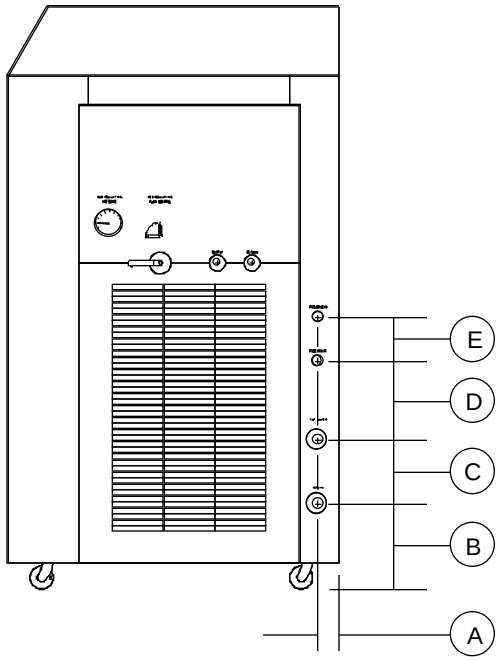

Base unit (rear for HX-150, right side for all others)

Table #3:

	HX/150/HX-200/HX-300	HX-500/HX-750/HX-900
Dimension A *Inches* *Centimeters*	1 ¾ 4.4	2 7/8 7.5
Dimension B *Inches* *Centimeters*	7 17.8	5 ¾ 14.6
Dimension C *Inches* *Centimeters*	4 10.2	4 10.2
Dimension D *Inches* *Centimeters*	5 7/8 14.9	2 ¾ 7
Dimension E *Inches* *Centimeters*	3 7.6	3 7.6

1. A is from the rear edge of the base unit to the center of all four connections.
2. B is from the floor to the center of the liquid line connection.
3. C is from the center of the liquid line connection to the center of the discharge line connectior.
4. D is from the center of the discharge line connection to the center of the refrigerant relief valve connection.
5. E is from the center of the refrigerant relief valve connection to the center of the reservoir drain plug.

The size of the tubing used to connect the base unit to the condenser depends on the one way tubing length between the base unit and the remote condenser. Refer to Table 4 to determine the correct tubing size. Sizes are listed as outside diameter (OD).

Table #4:

Discharge Line (OD)[1]

Equivalent tubing length[2]	HX-150/HX-200	HX-300	HX-500	HX-750	HX-900
up to 50 feet	7/8	7/8	7/8	1 1/8	1 1/8
51 feet to 100 feet	7/8	7/8	1 1/8	1 1/8	1 1/8
101 feet to 150 feet	7/8	7/8	1 1/8	1 3/8	*
151 feet to 200 feet	7/8	1 1/8	1 1/8	1 3/8	*

Liquid Line (OD)[1]

Equivalent tubing length[2]	HX-150/HX-200	HX-300	HX-500	HX-750	HX-900
up to 50 feet	3/8	1/2	1/2	5/8	7/8
51 feet to 100 feet	1/2	1/2	5/8	5/8	7/8
101 feet to 150 feet	1/2	1/2	5/8	3/4	*
151 feet to 200 feet	1/2	5/8	5/8	3/4	*

1. Outside diameter (OD) is listed in inches.
2. Tubing length is based on the one way length between the base unit and the remote condenser.
* Contact NESLAB

Each valve, fitting and bend in a refrigeration line contributes to the fiction pressure drop. Because computing these pressure drops can be complex, an equivalent length of straight tubing is normally used instead.

Use Table 5 to determine the equivalent lengths for commonly used valves and fittings.

Table #5:

Line Size O.D., In.	Globe Valve	Angle Valve	90° Elbow	45° Elbow	Tee Line	Tee Branch
½	9	5	0.9	0.4	0.6	2
5/8	12	6	1	0.5	0.8	2.5
7/8	15	8	1.5	0.7	1.0	3.5
1 1/8	22	12	1.8	0.9	1.5	4.5
1 3/8	28	15	2.4	1.2	1.8	6

NESLAB requires that all refrigeration lines be TYPE L (medium wall) refrigeration grade copper tubing. Refrigeration grade tubing is required since it is available cleaned, dehydrated, and capped to avoid contamination prior to installation. Refrigerant grade tubing is available from NESLAB. Contact our Sales Department for more information.

Isolation valves are installed on both the discharge and liquid lines. Refer to the flow diagram for more details. See Table 4 to determine the correct tubing size.

Both the base unit and the remote condenser are equipped with refrigerant relief valves. The valve connection on the base unit is a ½ inch compression fitting located on the right side of the unit. Refer to Table 3 to identify the location of the connection. Connect the valve on the base unit to ½ inch OD copper tubing that will vent any refrigerant discharge outdoors.



Do not vent the relief valve in an area where the vented gas could be breathed.

The relief valve on the remote condenser is supplied with vent tubing. The vent tubing on both valves must be positioned so it faces downward in order to ensure safe venting.

All sweat type fittings must be wrought copper or forged brass. An effort should be made to minimize the number of elbows and to keep the lines as straight as possible. All elbows must be the long radius type.

Install horizontal runs of the discharge line sloped downward in the direction of flow at a rate of 1 inch every 20 feet (2.54 centimeters every 6 meters). **Support all tubing at intervals of no more than every 8 feet (2.4meters), making sure supports are properly anchored.** Install rubber grommets between tubing and clamps to prevent chaffing.

All joints in the discharge line must be soldered using a silver solder alloy containing no less than 15% silver. Use only a suitable silver solder alloy on all copper to copper connections in the liquid line. **On copper to brass joints, where excessive heat can cause damage, use only 45% silver solder.** On copper to steel, brass to steel, and steel to steel joints, use a silver solder alloy containing at least 35% silver. **During the brazing operation, dry nitrogen must be bled through the piping at a very low pressure to prevent oxidation and scaling.**

Wrap the ball valves and the condenser relief valve with a wet cloth while brazing.



During operation, the discharge line may reach temperatures of as much as +150°F to +200°F (+65°C to +95°C). Cellular glass type insulation or permanent guards are required to prevent the possibility of burns or other injuries to operators or maintenance persons. Additionally, metal pipe sleeves are required where tubing passes through a concrete wall or floor. The space between the tubing and the sleeve must be filled using a mastic-insulating compound.

Refer to Table 3 for location of refrigeration line connections.

Thoroughly leak check all refrigeration lines and soldered joints. If any leaks are found, make sure they are repaired prior to the Service Technician's inspection visit.



Refrigeration lines must be evacuated for 24 hours prior to starting the unit.

Inspections

An on-site pre-installation inspection by NESLAB of all the electrical, plumbing, and site requirements is strongly recommended prior to operating the system. An inspection of the site prior to delivery can provide "insurance" against start up delays. Contact the Customer Service Department at least three weeks prior to the planned start up date to arrange an inspection (see Preface, Installation Assistance).

A representative of the refrigeration-plumbing contractor, the primary operator(s) and the maintenance person(s) should be present during the inspection visit. This will allow direct communication of any problems discovered during the visit and provide an opportunity to answer any operating or maintenance questions.

After installation, an on-site inspection and certification by a NESLAB service technician is required to validate the warranty on the refrigeration system components.

If any additional requirements are found during the inspection, NESLAB will submit a written report to you. After the requirements are satisfied, an additional follow-up inspection may be arranged.

During any follow-up inspection NESLAB will also double check all circulation lines connecting the base unit to your application, and make sure the circulation system has been properly filled with fluid. Once verified that the base unit has been properly connected to your application, NESLAB will start the unit. It is extremely beneficial to have your application operable at the time of the initial start up. This will allow NESLAB to ensure the system meets its specifications and make any necessary adjustments.

Contact our Customer Service Department at our Headquarters in New Hampshire for complete information concerning any inspection visit cost.

Refrigeration Diagram
HX-150

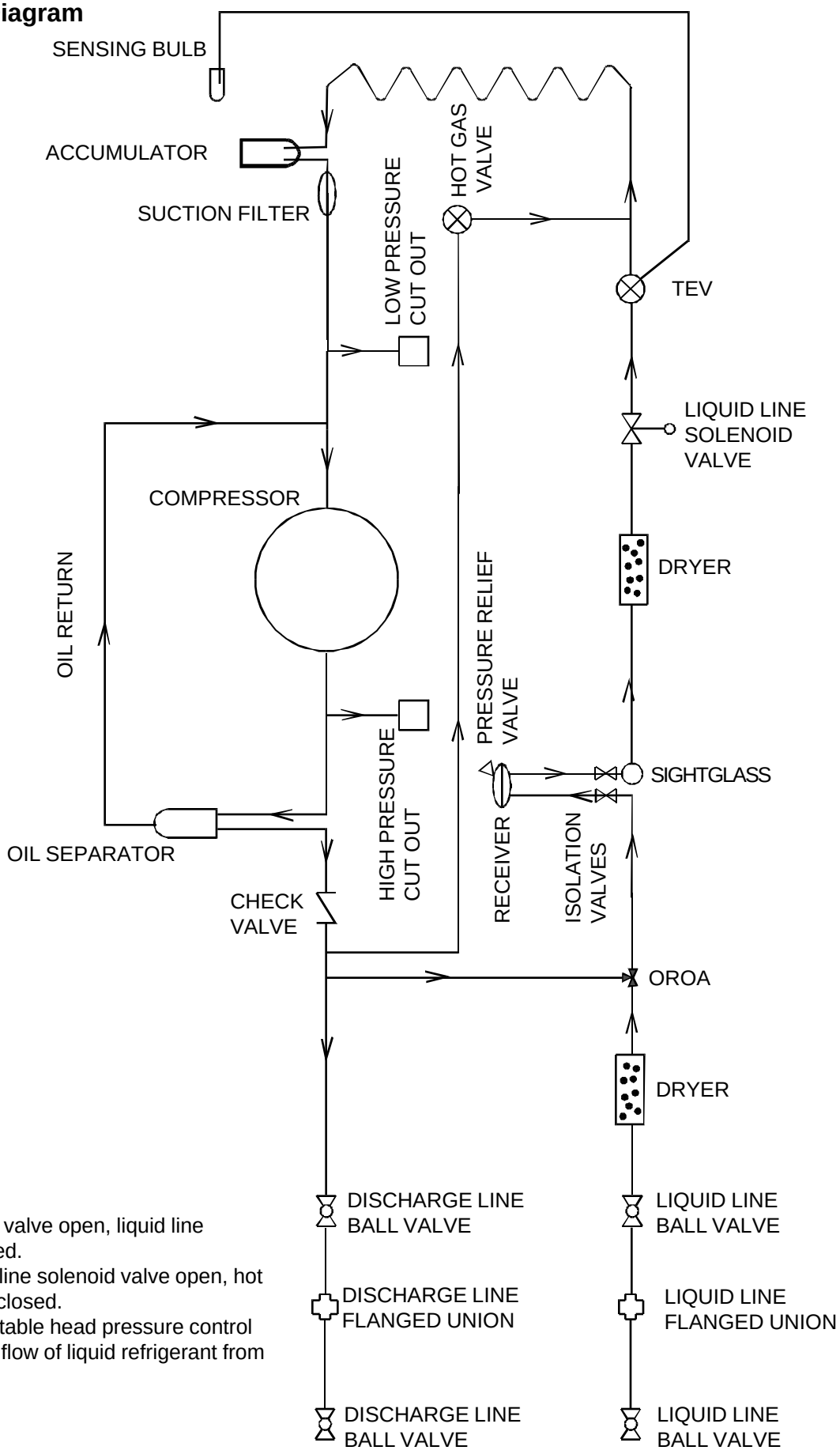

Idle Mode: Hot gas valve open, liquid line solenoid valve closed.
Cool Mode: Liquid line solenoid valve open, hot gas solenoid valve closed.
OROA: A nonadjustable head pressure control valve that limits the flow of liquid refrigerant from the condenser.

Refrigeration Diagram
HX-200 through HX-900

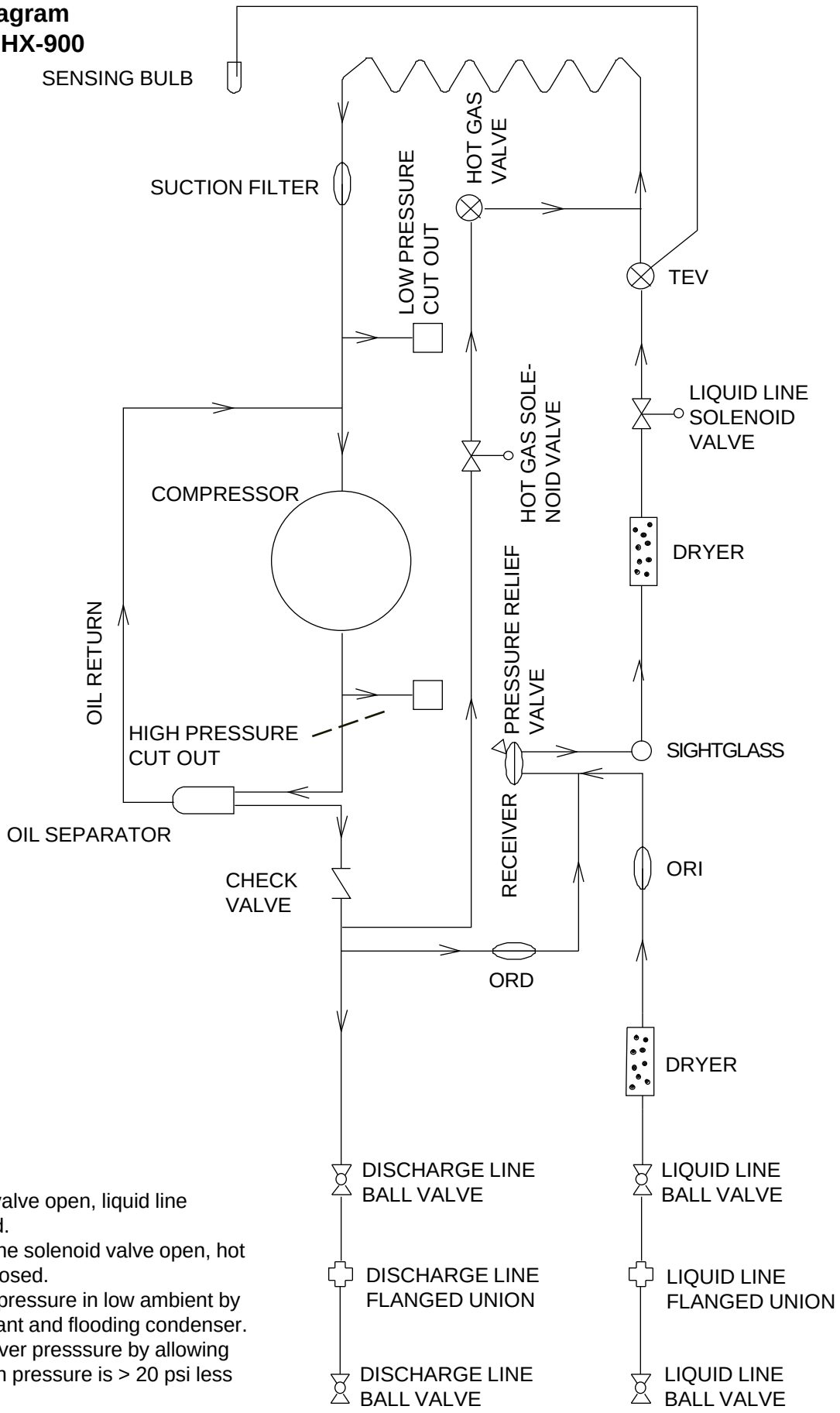

Idle Mode: Hot gas valve open, liquid line solenoid valve closed.
Cool Mode: Liquid line solenoid valve open, hot gas solenoid valve closed.
ORI maintains head pressure in low ambient by holding back refrigerant and flooding condenser.
ORD maintains receiver presssure by allowing hot gas to enter when pressure is > 20 psi less than discharge.

WARRANTY

NESLAB Instruments, Inc. warrants for 12 months from date of shipment any NESLAB unit according to the following terms.

Any part of the unit manufactured or supplied by NESLAB and found in the reasonable judgment of NESLAB to be defective in material or workmanship will be repaired at an authorized NESLAB Repair Depot without charge for parts or labor. The unit, including any defective part must be returned to an authorized NESLAB Repair Depot within the warranty period. The expense of returning the unit to the authorized NESLAB Repair Depot for warranty service will be paid for by the buyer. NESLAB's responsibility in respect to warranty claims is limited to performing the required repairs or replacements, and no claim of breach of warranty shall be cause for cancellation or recision of the contract of sales of any unit.

With respect to units that qualify for field service repairs, NESLAB's responsibility is limited to the component parts necessary for the repair and the labor that is required on site to perform the repair. Any travel labor or mileage charges are the financial responsibility of the buyer.

The buyer shall be responsible for any evaluation or warranty service call (including labor charges) if no defects are found with the NESLAB product.

This warranty does not cover any unit that has been subject to misuse, neglect, or accident. This warranty does not apply to any damage to the unit that is the result of improper installation or maintenance, or to any unit that has been operated or maintained in any way contrary to the operating or maintenance instructions specified in NESLAB's Instruction and Operation Manual. This warranty does not cover any unit that has been altered or modified so as to change its intended use.

In addition, this warranty does not extend to repairs made by the use of parts, accessories, or fluids which are either incompatible with the unit or adversely affect its operation, performance, or durability.

NESLAB reserves the right to change or improve the design of any unit without assuming any obligation to modify any unit previously manufactured.

THE FOREGOING EXPRESS WARRANTY IS IN LIEU OF ALL OTHER WARRANTIES, EXPRESSED OR IMPLIED, INCLUDING BUT NOT LIMITED TO WARRANTIES OR MERCHANTABILITY AND FITNESS FOR A PARTICULAR PURPOSE.

NESLAB'S OBLIGATION UNDER THIS WARRANTY IS STRICTLY AND EXCLUSIVELY LIMITED TO THE REPAIR OR REPLACEMENT OF DEFECTIVE COMPONENT PARTS AND NESLAB DOES NOT ASSUME OR AUTHORIZE ANYONE TO ASSUME FOR IT ANY OTHER OBLIGATION.

NESLAB ASSUMES NO RESPONSIBILITY FOR INCIDENTAL, CONSEQUENTIAL, OR OTHER DAMAGES INCLUDING, BUT NOT LIMITED TO LOSS OR DAMAGE TO PROPERTY, LOSS OF PROFITS OR REVENUE, LOSS OF THE UNIT, LOSS OF TIME, OR INCONVENIENCE.

This warranty applies to units sold in the United States. Any units sold elsewhere are warranted by the affiliated marketing company of NESLAB Instruments, Inc. This warranty and all matters arising pursuant to it shall be governed by the law of the State of New Hampshire, United States. All legal actions brought in relation hereto shall be filed in the appropriate state or federal courts in New Hampshire, unless waived by NESLAB.

HX Series
Recirculating Chiller
Remote Condenser

NESLAB Manual P/N 002001
Rev. 07/15/98

Site Preparation and Installation Manual



NESLAB online
Product Service Information, Applications Notes, MSDS Forms, e-mail.

Call our bulletin board system
(603)427-2490
Contact us for free access software.

Voice Info: (800) 4-NESLAB

Comments on this manual can be sent to:

NESLAB@neslabinstruments.com

or visit our Web page at:

http://www.neslabinc.com

HX Series Recirculating Chiller Remote Condenser Site Preparation and Installation Manual

Table of Contents

PREFACE

Compliance 2
Unpacking 2
Installation Assistance 2

SECTION I
General Information

Objective 3
Overview of Responsibilities 3

SECTION II
Safety

Warnings 5

SECTION III
Installation

Accessibility 5
Site 7
Electrical Requirements 13
Refrigeration Requirements 14
Inspections 18
Refrigeration Diagram HX-150 19
Refrigeration Diagram HX-200 through HX-900 20

SECTION IV
Warranty 21

Preface

Compliance

The CE label on the rear of the unit identifies products tested and found to be in compliance with the requirements defined in the EMC standards defined by 89/336/EEC. The testing has demonstrated compliance with the following standards:

EMC:

EN 55011, Class A Verification	Industrial, Scientific and Medical Emissions
IEC 801-2: 1991	Electro-Static Discharge
IEC 801-3: 1988	Radiated Electromagnetic Field
IEC 801-4: 1988	Conducted Electrical Fast Transient/Burst

For any additional information refer to the Letter of Compliance that shipped with the unit.

Unpacking

Unless it is otherwise impractical because of doorway or passage constraints, do not remove the remote condenser or the base unit from their shipping crates (or cartons) before the components are in their final location and are ready to be installed.

Retain all cartons and packing material until the unit is operated and found to be in good condition. If the unit shows external or internal damage, or does not operate properly, contact the transportation company and file a damage claim. Under ICC regulations, this is your responsibility.

Installation Assistance

NESLAB is committed to providing complete technical support throughout the installation process. We understand that the ability to complete an installation project on schedule is a large factor in the success of a remote condenser installation. We will cooperate fully with the customer to ensure that the installation proceeds smoothly and that you receive the prompt, courteous service and high quality product that you deserve.

This manual addresses the major considerations involved in site preparation and component installation. However, due to the large number of options available with our recirculating chillers and the many variables involved in installing a remote condenser, additional information may be necessary. If you have questions concerning the installation of your components, the information in this manual, or the installation process in general, please contact our Sales Department for assistance.

Section I General Information

Objective

This manual is intended as a guide to assist the NESLAB customer in selecting and preparing a site, and installing a remote condenser to an HX Series Recirculating Chiller. The focus of the manual is on the installation of the remote condenser in conjunction with the base unit (chiller).

This manual is not intended as a guide for installing the base unit to the instrument being cooled; this information is contained in the operation manual and is shipped with the base unit. Operation and maintenance instructions for the remote condenser are also included in the chiller's operation manual.

Overview of Responsibilities

In an effort to make the installation proceed as smoothly as possible, as well as, specify contractual responsibilities, the following overview is provided. The overview outlines both NESLAB's and your responsibilities during and after the installation process. Exceptions or deviations from these responsibilities must be approved, in writing, by NESLAB prior to installation.

NESLAB provides the base unit with a full charge of refrigerant, the remote condenser, and complete specifications on the installation of the remote condenser and its connection to the base unit.

The complete installation specifications are provided in two ways: the Site Preparation and Installation Manual; and the technical support provided by NESLAB's Sales, Service, and Engineering Departments.

After installation, an on-site inspection and certification by a NESLAB service technician is required to validate the warranty on the refrigeration system components.

The on-site inspection includes a complete inspection for conformance with the requirements outlined in this manual, evacuating the refrigerant lines between the condenser and the base unit, performing the initial start up of the unit, and providing any additional education requested concerning the operation or maintenance of the system.

You are responsible for providing all electrical connections and the proper voltage source, all refrigeration plumbing between the base unit and the remote condenser (including piping, valves, adequate venting, and a complete leak check of all tubes and joints), and all site requirements (service access, concrete pads, mounting hardware, etc.).

The corresponding chapters in this manual describe each of these requirements.

In addition, you are responsible for obtaining all licenses and approvals required for the installation, and installing the unit in compliance with all applicable construction codes.

The base unit and remote condenser have a one-year warranty against defective parts and workmanship from date of written approval certifying the installation. The warranty does not cover customer-installed parts or the workmanship of their installation. See the back page for complete details.

For long term reliable operation, the system must be maintained on a regular basis (see base unit operator's manual for service and maintenance procedures). If customer-provided care is not practical, contact the Service Manager at our Headquarters in New Hampshire for complete on-site service contract information. Failure to properly maintain the system can cause damage and may void the manufacturer's warranty.

Section II Safety

Warnings

Make sure you read and understand all instructions and safety precautions listed in this manual before installing your unit. If you have any questions concerning the installation of your unit or the information in this manual, please contact our Sales Department for assistance.

Performance of installation procedures other than those described in this manual may result in a hazardous situation and may void the manufacturer's warranty.

Transport the components with care. Sudden jolts or drops can damage the refrigeration lines.

Observe all warning labels.

Do not remove warning labels.

In addition to the safety warning listed above, warnings are posted throughout the manual. These warnings are designated by an exclamation mark inside an equilateral triangle with text highlighted in bold print. Read and follow these important instructions. Failure to observe these instructions can result in permanent damage to the unit, significant property damage, or personal injury or death.

Section III Installation

Accessibility

The installation site must be accessible from the delivery location. Ensure there is adequate clearance from the delivery location throughout the access route. Most units will require either a forklift or hydraulic pallet mover, which must be considered when calculating accessibility.

If the installation site is at a different level from the delivery location, be sure the lifting equipment, for example, an elevator, is rated to handle the combined size and weight of the unit and the moving equipment.

Refer to Table 1 to identify the specific size and weight of your components.

The exact method of handling and setting the unit depends on available equipment, size of unit, final location, and other variables. Use judgement to determine the specific method of handling the unit. All units are shipped on heavy skids and crated. Generally, it is advisable to bring the unit as close to its final location as possible before removing the crating. Units are provided with lifting ears near the four corners. Under no circumstances should the coil headers or return bends be used for moving the unit.





Contractor supplied spreader bars must be used and a safety sling should be used when lifting.

Table #1:

Base Unit

	HX-150	HX-200/HX-300	HX-500/HX-750	HX-900
Unit Dimensions (H x W x D) *Inches* *Centimeters*	39⅝ x 26¼ x 21⅛ 101 x 67 x 54	45¾ x 33¾ x 25¼ 117 x 86 x 64	50⅝ x 46 x 28¾ 128 x 117 x 73	
Crate Dimensions (H x W x D) *Inches* *Centimeters*	49 x 33 x 29 125 x 84 x 74	55 x 40 x 33 140 x 102 x 84	61 x 53½ x 36 155 x 136 x 91	
Shipping Weight *Pounds* *Kilograms*	320 145	505 229	800 362	1000 453

Remote Condenser

	HX-150/HX-200	HX-300	HX-500	HX-750	HX-900
Condenser Dimensions[1] (H x W x D) *Inches* *Centimeters*	28 x 22 x 37½ 71 x 56 x 95	44½ x 43 x 39¾ 113 x 109 x 101	44½ x 43 x 49¾ 113 x 109 x 126	44½ x 43 x 69¾ 113 x 109 x 177	50 x 45½ x 125 127x115.6x317.5
Crate Dimensions[2] (H x W x D) *Inches* *Centimeters*	54 x 31 x 52 137 x 79 x 132	54 x 51 x 52 137 x 130 x 132	54 x 51 x 61 137 x 130 x 155	54 x 51 x82 137 x 130 x 208	**NOT AVAILABLE**
Unit Weight *Pounds* *Kilograms*	114 51.7	180 81.6	260 117.9	470 213.1	700 317.5
Shipping Weight *Pounds* *Kilograms*	345 156	345 156	395 179	525 238	870 395

1. The height of the condenser for models HX-500 and HX-750 when mounted for vertical air flow is adjustable from 44½ inches (113 centimeters) to 54¾ inches (139 centimeters). The flow adjustment for HX-900 units is 50 inches (127 centmeters) to 62 inches (157.5 centimeters)
2. Crate dimensions are approximate.

Site

Base Unit

The base unit should be located in an area where ambient temperatures are inside the range of +55°F to +95°F (+13°C to +35°C).

The site must be large enough to allow free access on all four sides of the unit. A minimum clearance of 3 feet (1 meter) on all four sides is required. Refer to Table 1 to determine the width and depth of your base unit.

If these dimensions are not possible, consult our Sales Department for assistance.

The base unit must be in a location with adequate ventilation to discharge heat generated by the recirculation pump and other components. Typically, ventilation for a unit with the minimum access clearance in a room of 500 feet^2 (46.5 meters^2) or more is considered adequate. Additional ventilation may be required if the access clearance is compromised or the site is less than 500 feet^2 (46.5 meters^2).



Never place the base unit in a location where excessive heat, moisture, or corrosive materials are present.

Special attention should be given to the unit's location and position. The operator panel is located on the front of the unit. The remote condenser and refrigerant relief valve connections are located on the right side of the unit. Position the unit so the operator controls are convenient to the user and the remote condenser and relief valve connections can be easily accessed during installation or for future servicing.

Damage can occur to the plumbing that connects the base unit to the remote condenser if the base unit is bumped or jolted from its site. Provisions should be made to prevent the unit from being moved after installation. Once the unit is plumbed, lower the adjustable feet on the unit's base. If the unit is located in a heavy traffic area where the possibility of collision is imminent, secure the unit using blocks or mounting brackets.

Remote Condenser

The remote condenser should be located on a well-constructed, level surface, able to withstand the distributed weight of the condenser and the mounting hardware. The ambient temperature of the site should be within the range of -10°F to +110°F (-23°C to +43°C).

Remote condensers for HX-150s, HX-200s, and HX-300s are available with vertical airflow only. Condensers for HX-500s, HX-750s and HX-900s are available with either horizontal or vertical airflow.

Vertical airflow units should be located no closer than the width of the unit from a wall or other obstruction. Increased distance is preferred whenever possible. Sufficient free area should be left around and below the unit to avoid air restriction to the coil.

For multiple units placed side by side, the minimum distance between the units is the width of the largest unit. If the units are placed end to end, the minimum distance between the units is four feet.

If the unit is placed in a pit, the top of the unit should be level with the top of the pit and the side distance increased to twice the width. If the top of the unit is not level with the top of the pit, discharge cones or stacks must be used to raise discharge air to the top of the pit. This is a minimum requirement.

If the unit is placed behind a fence, the fence must have a 50% free area, with a one foot (minimum) undercut. The unit cannot be closer than the width of the unit to the fence, nor should the top of the fence exceed the height of the unit. If these requirements are not used, the unit must be installed like a unit in a pit.

Horizontal airflow units should be installed with the coil (inlet air side) facing the prevailing winds. If the coil faces a wall, there must be a minimum clearance of 4 feet (1.2 meters) for adequate air flow. Increased distance is preferred whenever possible.



Inadequate air flow will cause a reduction in cooling capacity and, in extreme cases, refrigeration system failure.

The remote condenser must be securely mounted to the foundation on which it is installed (concrete pad, rooftop, etc.). The condenser frame has holes that allow the condenser to be lag bolted to its foundation. Refer to Figures 1 through 6 to identify the minimum pad size and the bolt pattern details for your remote condenser. Concrete slabs used for unit mounting should be installed level and be properly supported to prevent settling. We recommend a one-piece concrete slab with footings extended below the frost line.

Roof-mounted units should be installed level on steel channels or an I-beam frame to support the unit above the roof. Use of vibration pads or isolators is recommended. The roof must be strong enough to support the unit's weight.

Install units away from occupied spaces and above or outside utility areas, corridors, and auxiliary spaces to reduce the transmission of noise and vibration to occupied spaces. Refrigeration piping should be flexible enough to prevent the transmission of noise and vibration from the unit into the building. If the refrigeration lines are to be suspended from the building's structure, isolation hangars should be used to prevent vibration transmission. Where piping passes through the wall, pack fiberglass and sealing compound around the lines to minimize vibration and retain flexibility in the lines.

Figure #1:
HX-150/HX-200
(Vertical air flow condenser)

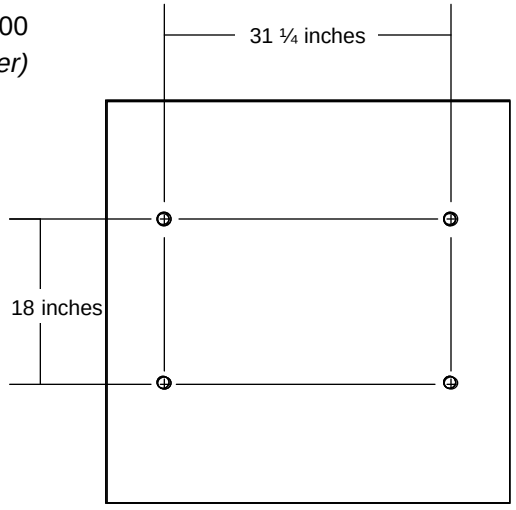

Minimum pad size: 44 inches x 44 inches (112 centimeters x 112 centimeters)

Lag bolt quantity and size: Four (4) 3/8 inch diameter bolts are required to secure the condenser.

Figure #2:
HX-300
(Vertical air flow condenser)

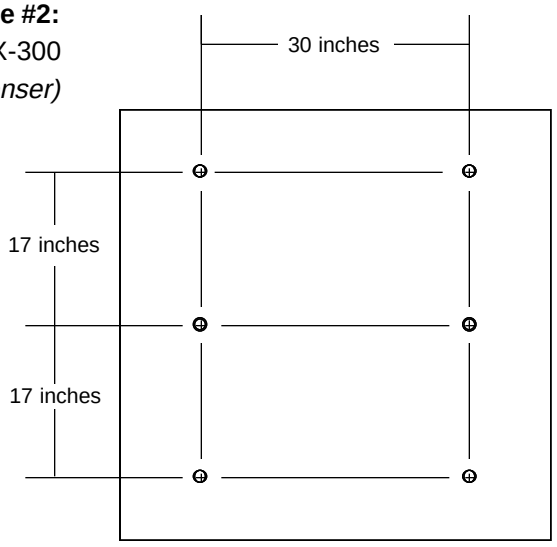

Minimum pad size: 48 inches x 48 inches (122 centimeters x 122 centimeters)

Lag bolt quantity and size: Four (4) ½ inch diameter bolts are required to secure the condenser, six (6) bolts are recommended.

Figure #3:
HX-500
(Vertical air flow condenser)

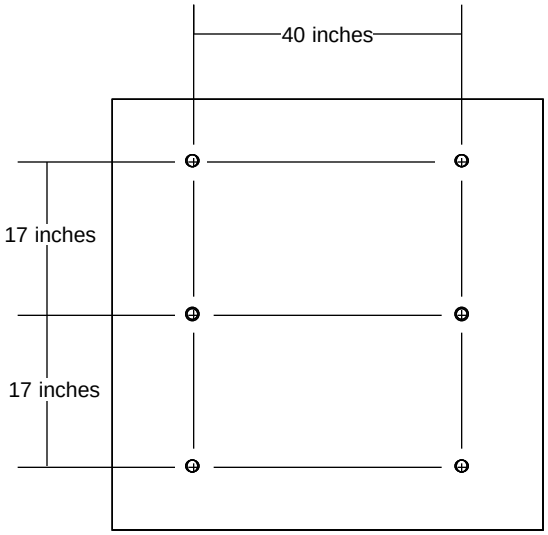

Minimum pad size: 58 inches x 58 inches (147 centimeters x 147 centimeters)

Lag bolt quantity and size: Four (4) ½ inch diameter bolts are required to secure the condenser, six (6) are recommended.

Figure #4:
HX-500
(Horizontal air flow condenser)

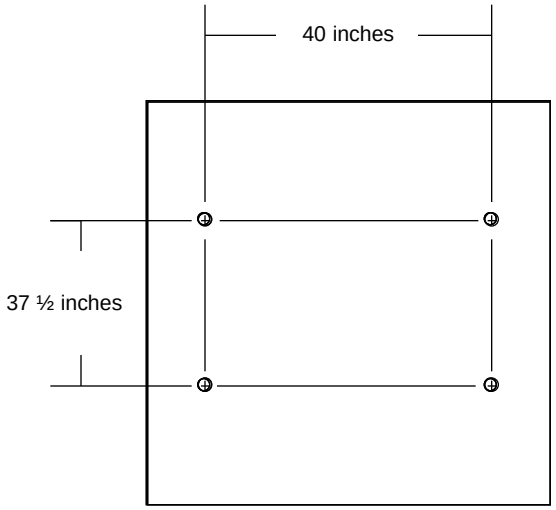

Minimum pad size: HX500 - 58 inches x 58 inches (147 centimeters x 147 centimeters)
HX 900 - 59 inches x 120 inches (150 centimeters x 305 centimeters)

Lag bolt quantity and size: Four (4) ½ inch diameter bolts are required to secure the condenser.

Figure #5:
HX-750
(Vertical air flow condenser)

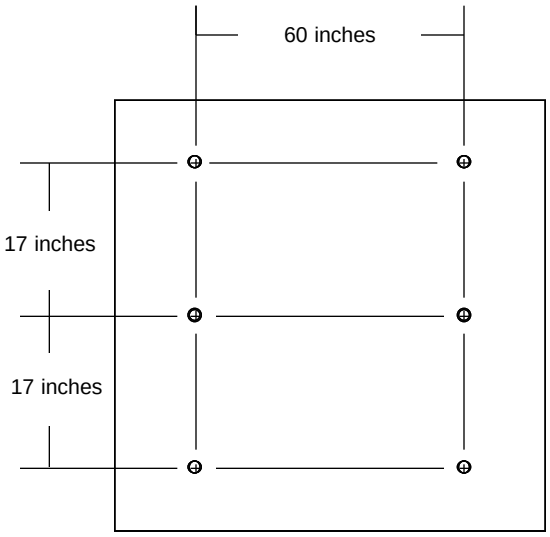

Minimum pad size: 58 inches x 68 inches (147.3 centimeters x 172.7 centimeters)

Lag bolt quantity and size: Four (4) ½ inch diameter bolts are required to secure the condenser, six (6) bolts are recommended.

Figure #6:
HX-750
(Horizontal air flow condenser)

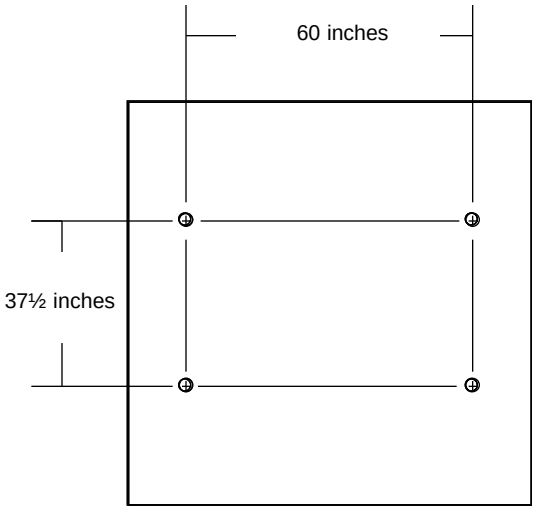

Minimum pad size: 58 inches x 68 inches (147.3 centimeters x 172.7 centimeters)

Lag bolt quantity and size: Four (4) ½ inch diameter bolts are required to secure the condenser.

Figure #7:
HX-900
(Vertical air flow condenser)

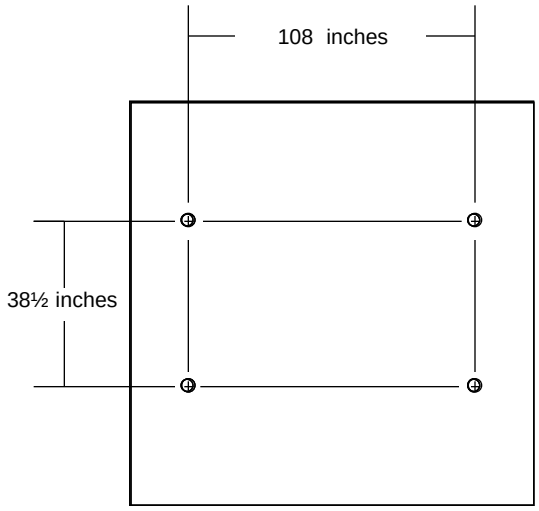

Minimum pad size: 48 inches x 116 inches (121.9 centimeters x 294.6 centimeters)

Lag bolt quantity and size: Four (4) ½ inch diameter bolts are required to secure the condenser.

Figure #2:
HX-900
(Horizontall air flow condenser)

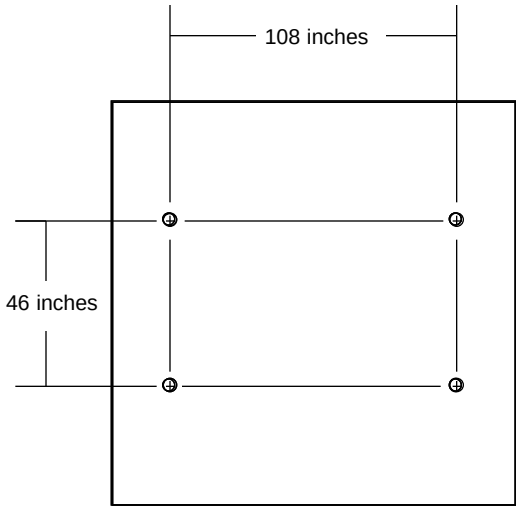

Minimum pad size: 50 inches x 116 inches (127 centimeters x 294.6 centimeters)

Lag bolt quantity and size: Four (4) ½ inch diameter bolts are required to secure the condenser.

Electrical Requirements

An electrical connection must be made from the remote condenser to the HX unit. The correct terminal board on the HX used for the electrical connections is found in the pull box and can be identified by locating the yellow sticker labelled:

ELECTRICAL CONNECTIONS FOR CONDENSER

The exact location of the sticker varies with the unit size.

The electrical requirements listed below in Table 2 are typical for each of the model sizes indicated. The requirements may vary depending on the size of the pump and compressor in your unit. Consult your NESLAB Sales Representative to verify the specific electrical requirements of your unit.

Table #2:

	HX-150	HX-200	HX-300/HX-500	HX-750	HX-900
Volts	220-240	208-230	208-230	208-230/460	
Hertz	50	60	60	60	
Phase[1]	1	1	3	3	
FLA Amps[2]	2.0		2.6	5.2/2.6	10.4/5.2
Number of fans	1			2	4
Fan Horsepower	0.25		0.33		
Minimum AWG	Consult local electrical codes				
Number of Conductors					

1. Consult your NESLAB Sales Representative for information on the specific phase requirements of your system.
2. Amp rating is for the remote condenser only. The requirements for the HX unit vary depending on the size of the pump and compressor. Consult your NESLAB Sales Representative to verify the specific electrical requirements of your unit.
3. All electrical connections must be made to the terminal blocks located inside the pull box on the HX unit.

Make sure the voltage of the power source agrees with the unit's voltage and frequency rating. The unit is designed to tolerate deviations of ±10% from the rated line voltage.

A qualified electrician must make the electrical connections for both the base unit and the remote condenser. A wiring diagram is provided to assist electrical installation. If additional information is necessary, contact our Sales Department.

Wire the electrical connections in conformance with local, state, and federal codes. Double check all wiring to make sure it is properly connected and protected from the elements.

Refrigeration Requirements

The base unit is equipped with isolation valves and is shipped with a full refrigerant charge.

The refrigeration lines that connect the base unit and the condenser, and the physical connection of the two components are the customer's responsibility. Use the flow diagram below to assist plumbing installation. If further information is necessary, contact our Sales Department.

Do not operate ball valves, refrigerant escape and system contamination will result.

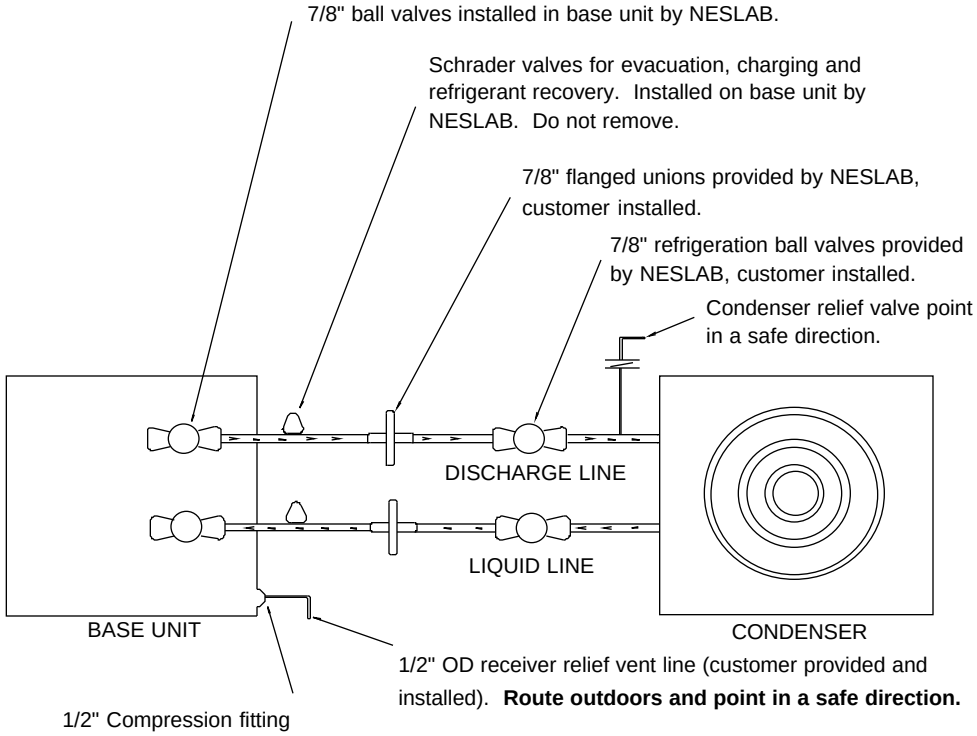

Refer to Table 3 to determine the location of the refrigeration line connections on the base unit.

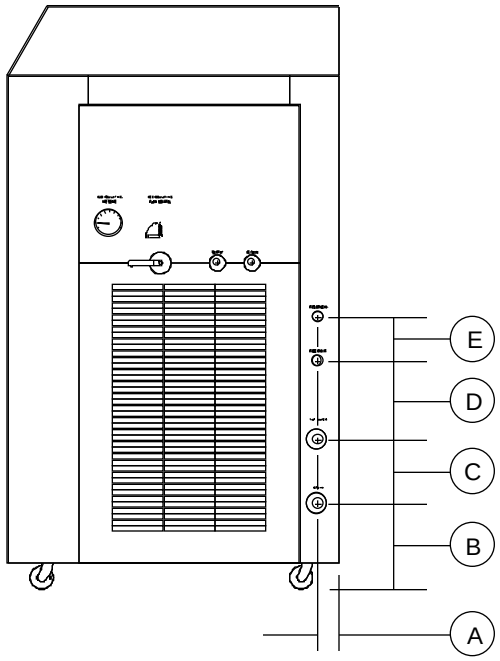

Base unit (rear for HX-150, right side for all others)

Table #3:

	HX/150/HX-200/HX-300	HX-500/HX-750/HX-900
Dimension A *Inches* *Centimeters*	1 ¾ 4.4	2 7/8 7.5
Dimension B *Inches* *Centimeters*	7 17.8	5 ¾ 14.6
Dimension C *Inches* *Centimeters*	4 10.2	4 10.2
Dimension D *Inches* *Centimeters*	5 7/8 14.9	2 ¾ 7
Dimension E *Inches* *Centimeters*	3 7.6	3 7.6

1. A is from the rear edge of the base unit to the center of all four connections.
2. B is from the floor to the center of the liquid line connection.
3. C is from the center of the liquid line connection to the center of the discharge line connectior.
4. D is from the center of the discharge line connection to the center of the refrigerant relief valve connection.
5. E is from the center of the refrigerant relief valve connection to the center of the reservoir drain plug.

The size of the tubing used to connect the base unit to the condenser depends on the one way tubing length between the base unit and the remote condenser. Refer to Table 4 to determine the correct tubing size. Sizes are listed as outside diameter (OD).

Table #4:

Discharge Line (OD)[1]

Equivalent tubing length[2]	HX-150/HX-200	HX-300	HX-500	HX-750	HX-900
up to 50 feet	7/8	7/8	7/8	1 1/8	1 1/8
51 feet to 100 feet	7/8	7/8	1 1/8	1 1/8	1 1/8
101 feet to 150 feet	7/8	7/8	1 1/8	1 3/8	*
151 feet to 200 feet	7/8	1 1/8	1 1/8	1 3/8	*

Liquid Line (OD)[1]

Equivalent tubing length[2]	HX-150/HX-200	HX-300	HX-500	HX-750	HX-900
up to 50 feet	3/8	1/2	1/2	5/8	7/8
51 feet to 100 feet	1/2	1/2	5/8	5/8	7/8
101 feet to 150 feet	1/2	1/2	5/8	3/4	*
151 feet to 200 feet	1/2	5/8	5/8	3/4	*

1. Outside diameter (OD) is listed in inches.
2. Tubing length is based on the one way length between the base unit and the remote condenser.
* Contact NESLAB

Each valve, fitting and bend in a refrigeration line contributes to the fiction pressure drop. Because computing these pressure drops can be complex, an equivalent length of straight tubing is normally used instead.

Use Table 5 to determine the equivalent lengths for commonly used valves and fittings.

Table #5:

Line Size O.D., In.	Globe Valve	Angle Valve	90° Elbow	45° Elbow	Tee Line	Tee Branch
½	9	5	0.9	0.4	0.6	2
5/8	12	6	1	0.5	0.8	2.5
7/8	15	8	1.5	0.7	1.0	3.5
1 1/8	22	12	1.8	0.9	1.5	4.5
1 3/8	28	15	2.4	1.2	1.8	6

NESLAB requires that all refrigeration lines be TYPE L (medium wall) refrigeration grade copper tubing. Refrigeration grade tubing is required since it is available cleaned, dehydrated, and capped to avoid contamination prior to installation. Refrigerant grade tubing is available from NESLAB. Contact our Sales Department for more information.

Isolation valves are installed on both the discharge and liquid lines. Refer to the flow diagram for more details. See Table 4 to determine the correct tubing size.

Both the base unit and the remote condenser are equipped with refrigerant relief valves. The valve connection on the base unit is a ½ inch compression fitting located on the right side of the unit. Refer to Table 3 to identify the location of the connection. Connect the valve on the base unit to ½ inch OD copper tubing that will vent any refrigerant discharge outdoors.



Do not vent the relief valve in an area where the vented gas could be breathed.

The relief valve on the remote condenser is supplied with vent tubing. The vent tubing on both valves must be positioned so it faces downward in order to ensure safe venting.

All sweat type fittings must be wrought copper or forged brass. An effort should be made to minimize the number of elbows and to keep the lines as straight as possible. All elbows must be the long radius type.

Install horizontal runs of the discharge line sloped downward in the direction of flow at a rate of 1 inch every 20 feet (2.54 centimeters every 6 meters). **Support all tubing at intervals of no more than every 8 feet (2.4meters), making sure supports are properly anchored.** Install rubber grommets between tubing and clamps to prevent chaffing.

All joints in the discharge line must be soldered using a silver solder alloy containing no less than 15% silver. Use only a suitable silver solder alloy on all copper to copper connections in the liquid line. **On copper to brass joints, where excessive heat can cause damage, use only 45% silver solder.** On copper to steel, brass to steel, and steel to steel joints, use a silver solder alloy containing at least 35% silver. **During the brazing operation, dry nitrogen must be bled through the piping at a very low pressure to prevent oxidation and scaling.**

Wrap the ball valves and the condenser relief valve with a wet cloth while brazing.



During operation, the discharge line may reach temperatures of as much as +150°F to +200°F (+65°C to +95°C). Cellular glass type insulation or permanent guards are required to prevent the possibility of burns or other injuries to operators or maintenance persons. Additionally, metal pipe sleeves are required where tubing passes through a concrete wall or floor. The space between the tubing and the sleeve must be filled using a mastic-insulating compound.

Refer to Table 3 for location of refrigeration line connections.

Thoroughly leak check all refrigeration lines and soldered joints. If any leaks are found, make sure they are repaired prior to the Service Technician's inspection visit.



Refrigeration lines must be evacuated for 24 hours prior to starting the unit.

Inspections

An on-site pre-installation inspection by NESLAB of all the electrical, plumbing, and site requirements is strongly recommended prior to operating the system. An inspection of the site prior to delivery can provide "insurance" against start up delays. Contact the Customer Service Department at least three weeks prior to the planned start up date to arrange an inspection (see Preface, Installation Assistance).

A representative of the refrigeration-plumbing contractor, the primary operator(s) and the maintenance person(s) should be present during the inspection visit. This will allow direct communication of any problems discovered during the visit and provide an opportunity to answer any operating or maintenance questions.

After installation, an on-site inspection and certification by a NESLAB service technician is required to validate the warranty on the refrigeration system components.

If any additional requirements are found during the inspection, NESLAB will submit a written report to you. After the requirements are satisfied, an additional follow-up inspection may be arranged.

During any follow-up inspection NESLAB will also double check all circulation lines connecting the base unit to your application, and make sure the circulation system has been properly filled with fluid. Once verified that the base unit has been properly connected to your application, NESLAB will start the unit. It is extremely beneficial to have your application operable at the time of the initial start up. This will allow NESLAB to ensure the system meets its specifications and make any necessary adjustments.

Contact our Customer Service Department at our Headquarters in New Hampshire for complete information concerning any inspection visit cost.

Refrigeration Diagram
HX-150

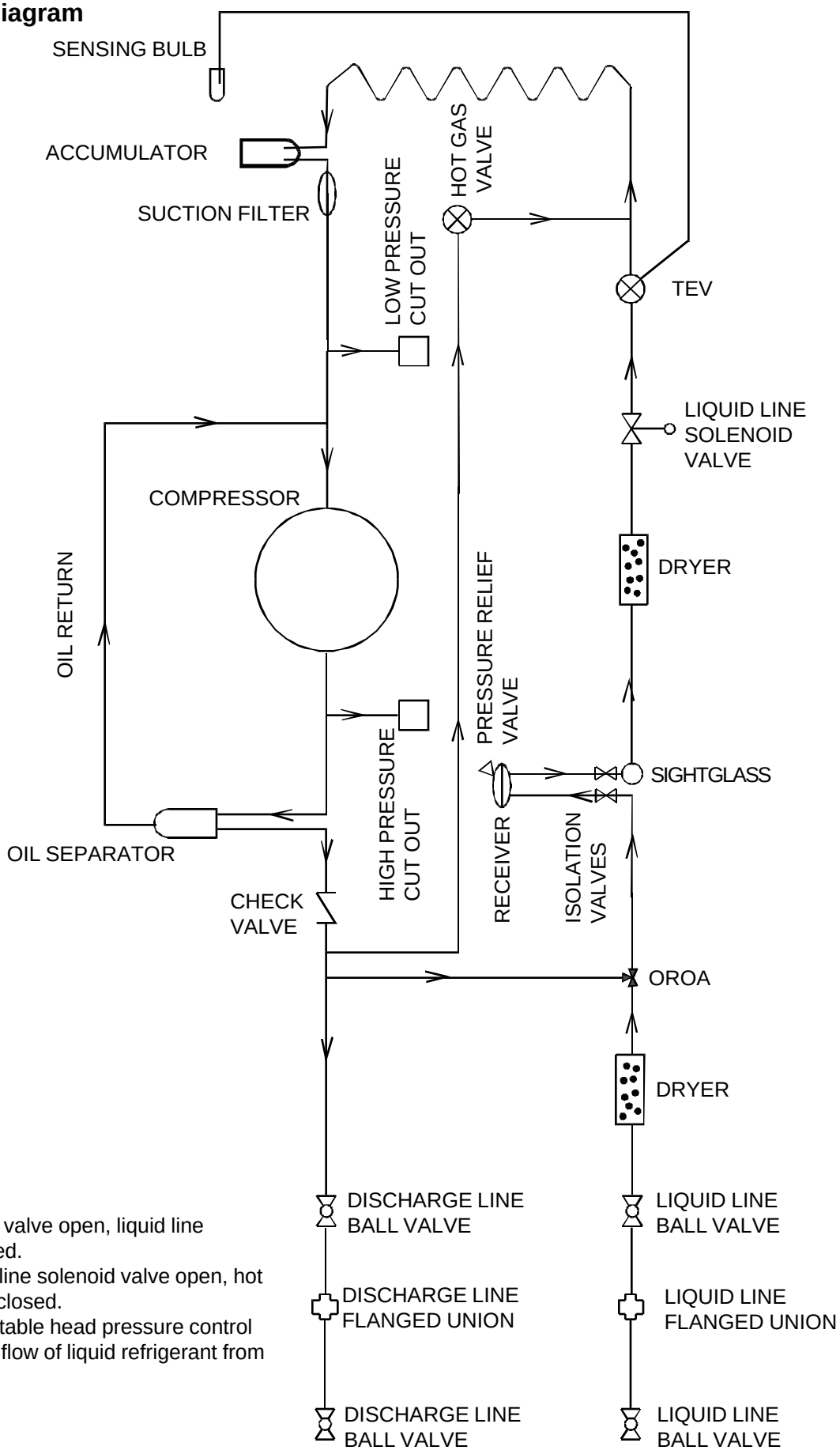

Idle Mode: Hot gas valve open, liquid line solenoid valve closed.
Cool Mode: Liquid line solenoid valve open, hot gas solenoid valve closed.
OROA: A nonadjustable head pressure control valve that limits the flow of liquid refrigerant from the condenser.

Refrigeration Diagram
HX-200 through HX-900

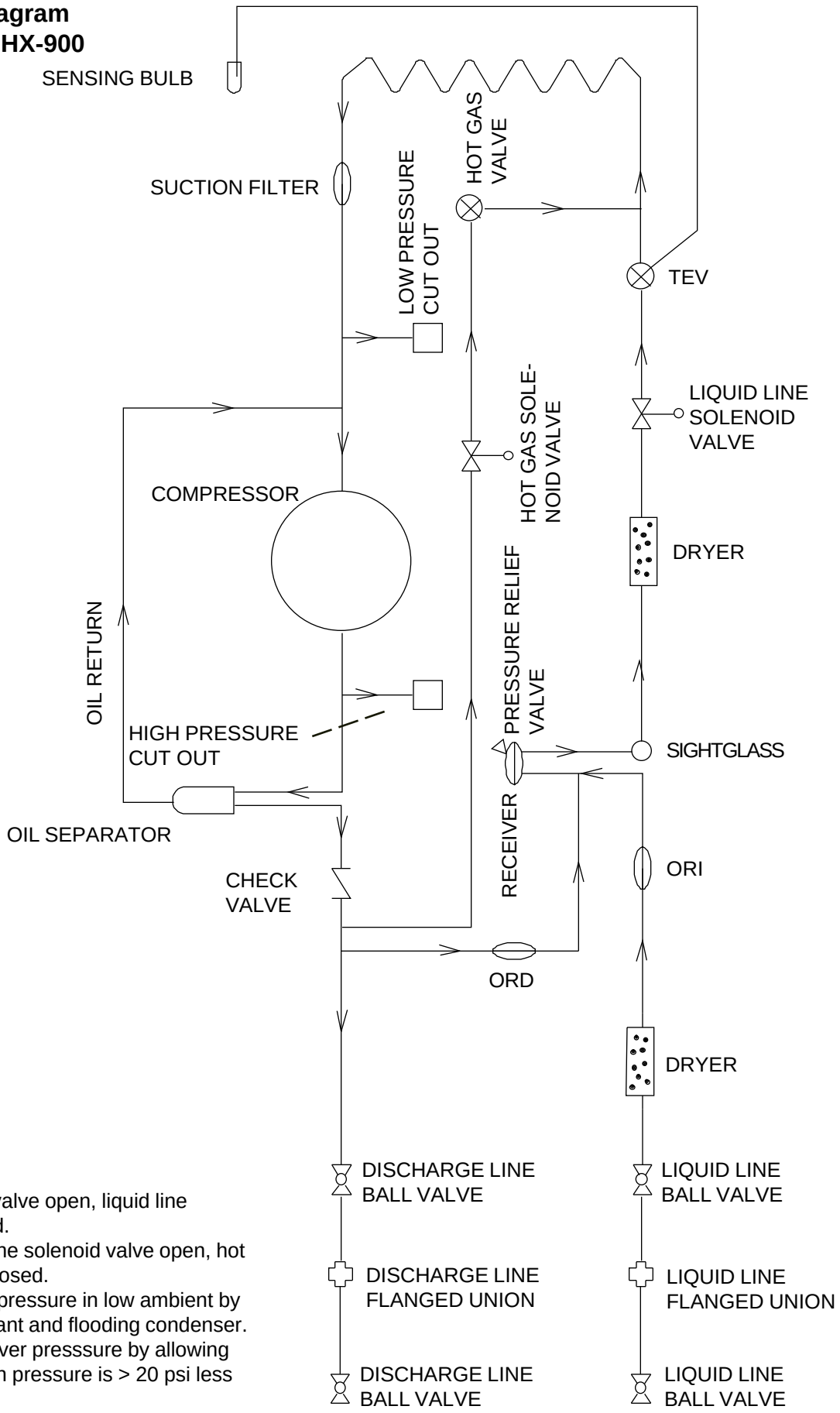

Idle Mode: Hot gas valve open, liquid line solenoid valve closed.
Cool Mode: Liquid line solenoid valve open, hot gas solenoid valve closed.
ORI maintains head pressure in low ambient by holding back refrigerant and flooding condenser.
ORD maintains receiver presssure by allowing hot gas to enter when pressure is > 20 psi less than discharge.

WARRANTY

NESLAB Instruments, Inc. warrants for 12 months from date of shipment any NESLAB unit according to the following terms.

Any part of the unit manufactured or supplied by NESLAB and found in the reasonable judgment of NESLAB to be defective in material or workmanship will be repaired at an authorized NESLAB Repair Depot without charge for parts or labor. The unit, including any defective part must be returned to an authorized NESLAB Repair Depot within the warranty period. The expense of returning the unit to the authorized NESLAB Repair Depot for warranty service will be paid for by the buyer. NESLAB's responsibility in respect to warranty claims is limited to performing the required repairs or replacements, and no claim of breach of warranty shall be cause for cancellation or recision of the contract of sales of any unit.

With respect to units that qualify for field service repairs, NESLAB's responsibility is limited to the component parts necessary for the repair and the labor that is required on site to perform the repair. Any travel labor or mileage charges are the financial responsibility of the buyer.

The buyer shall be responsible for any evaluation or warranty service call (including labor charges) if no defects are found with the NESLAB product.

This warranty does not cover any unit that has been subject to misuse, neglect, or accident. This warranty does not apply to any damage to the unit that is the result of improper installation or maintenance, or to any unit that has been operated or maintained in any way contrary to the operating or maintenance instructions specified in NESLAB's Instruction and Operation Manual. This warranty does not cover any unit that has been altered or modified so as to change its intended use.

In addition, this warranty does not extend to repairs made by the use of parts, accessories, or fluids which are either incompatible with the unit or adversely affect its operation, performance, or durability.

NESLAB reserves the right to change or improve the design of any unit without assuming any obligation to modify any unit previously manufactured.

THE FOREGOING EXPRESS WARRANTY IS IN LIEU OF ALL OTHER WARRANTIES, EXPRESSED OR IMPLIED, INCLUDING BUT NOT LIMITED TO WARRANTIES OR MERCHANTABILITY AND FITNESS FOR A PARTICULAR PURPOSE.

NESLAB'S OBLIGATION UNDER THIS WARRANTY IS STRICTLY AND EXCLUSIVELY LIMITED TO THE REPAIR OR REPLACEMENT OF DEFECTIVE COMPONENT PARTS AND NESLAB DOES NOT ASSUME OR AUTHORIZE ANYONE TO ASSUME FOR IT ANY OTHER OBLIGATION.

NESLAB ASSUMES NO RESPONSIBILITY FOR INCIDENTAL, CONSEQUENTIAL, OR OTHER DAMAGES INCLUDING, BUT NOT LIMITED TO LOSS OR DAMAGE TO PROPERTY, LOSS OF PROFITS OR REVENUE, LOSS OF THE UNIT, LOSS OF TIME, OR INCONVENIENCE.

This warranty applies to units sold in the United States. Any units sold elsewhere are warranted by the affiliated marketing company of NESLAB Instruments, Inc. This warranty and all matters arising pursuant to it shall be governed by the law of the State of New Hampshire, United States. All legal actions brought in relation hereto shall be filed in the appropriate state or federal courts in New Hampshire, unless waived by NESLAB.

RTE-101 Bath Circulator

Thermo NESLAB Manual P/N U00461
Rev. 11/08/00

Installation, Operation and Service Manual

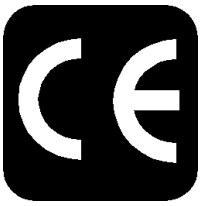

RTE-101 Constant Temperature Bath and Circulator

Table of Contents

PREFACE

Compliance 2
Unpacking 2
Warranty 2
NES-care 2
After-sale Support 2

SECTION I
Safety

Warnings 3

SECTION II
General Information

Description 4
Specifications 4

SECTION III
Installation

Site 5
Electrical Requirements 5
Plumbing Requirements 6
Fluids 6
Filling Requirements 6

SECTION IV
Temperature Control

Digital Temperature Controller 7
High Temperature Safety 8

SECTION V
Maintenance/
Troubleshooting

Cleaning 9
Algae 9
Error Codes 9
Controller Displays 10
Checklist 13
Service Assistance 13

SECTION VI
Wiring Diagram

Flow Diagram 14
Wiring Diagram 15

SECTION VI
Warranty

Warranty 17

Preface

Compliance

Products tested and found to be in compliance with the requirements defined in the EMC standards defined by 89/336/EEC as well as Low Voltage Directive (LVD) 73/23/EEC can be identified by the CE label on the rear of the unit. The testing has demonstrated compliance with the following directives:

LVD, 73/23/EEC	Complies with UL 3101-1:93
EMC, 89/336/EEC	EN 55011, Class A Verification EN 50082-1:1992 IEC 1000-4-2:1995 IEC 1000-4-3:1994 IEC 1000-4-4:1995

For any additional information refer to the Letter of Compliance that shipped with the unit (Declaration of Conformity).

Unpacking

Retain all cartons and packing material until the unit is operated and found to be in good condition. If the unit shows external or internal damage, or does not operate properly, contact the transportation company and file a damage claim. Under ICC regulations, this is your responsibility.

Warranty

Units have a warranty against defective parts and workmanship for one full year from date of shipment. See back page for more details.

NES-care Extended Warranty Contract

- Extend parts and labor coverage for an additional year.
- Worry-free operation.
- Control service costs.
- Eliminate the need to generate repair orders.
- No unexpected repair costs.

Other contract options are available. Please contact Thermo NESLAB for more information.

After-sale Support

Thermo NESLAB is committed to customer service both during and after the sale. If you have questions concerning the operation of your unit, contact our Sales Department. If your unit fails to operate properly, or if you have questions concerning spare parts, contact our Customer Service Department. Before calling, *please* obtain the following information:

BOM number _____

Serial number _____

Software version _____

The BOM and serial number on a label on the rear of the unit. To display the software version see page 10.

Section I Safety

Warnings

Make sure you read and understand all instructions and safety precautions listed in this manual before installing or operating your unit. If you have any questions concerning the operation of your unit or the information in this manual, contact our Sales Department.

Performance of installation, operation, or maintenance procedures other than those described in this manual may result in a hazardous situation and may void the manufacturer's warranty.

Observe all warning labels.

Never remove warning labels.

Never operate damaged or leaking equipment.

Never operate the unit without bath fluid in the bath.

Always turn off the unit and disconnect the line cord from the power source before performing any service or maintenance procedures, or before moving the unit.

For 220 - 240 volt units supplied without a line cord, use a harmonized (HAR) grounded 3-conductor cord, type H 0 5 V V - F , with conductors listed below. A suitable cord end is required for connecting to the equipment (see unit socket) and must terminate with an IEC approved plug for proper connection to power supply.

Nominal 1.0 mm^2 cross section rated 10 Amps Unit Socket: IEC - 320 C13

Always empty the bath before moving the unit.

Never operate equipment with damaged line cords.

Refer service and repairs to a qualified technician.

In addition to the warnings listed above, warnings are posted throughout the manual. These warnings are designated by an exclamation mark inside an equilateral triangle with text highlighted in bold print. Read and follow these important instructions. Failure to observe these instructions can result in permanent damage to the unit, significant property damage, or personal injury, or death.

Section II General Information

Description

The RTE Constant Temperature Baths are designed to provide temperature control for applications requiring a fluid work area or pumping to an external system.

The units consist of an air-cooled refrigeration system, heater, circulation pump, stainless steel bath, and a temperature controller.

Specifications

Temperature Range[1]	-12°C to +130°C
Temperature Stability[2]	±0.03°C
Cooling Capacity[2]	350 watts at 20°C
Pump Capacity[2]	11.5 liters per minute @ 0' Head, 14.5' Max (60Hz) 10 liters per minute @ 0' Head, 10.5' Max (50Hz)
Heater[3]	800 watts
Bath Work Area[4] *(L x W x D)* *Inches* *Centimeters*	 5 x 5 x 5 12.7 x 12.7 x 12.7
Bath Volume[5] *Gallons* *Liters*	 1.2 4.5
Unit Dimensions[6] *(H x W x D)* *Inches* *Centimeters*	 22¾ x 10⅛ x 14½ 57.8 x 25.7 x 36.8

Specifications subject to change.

1. See page 6, Fluid Recommendations.
2. Specifications listed for units operating at +20°C bath temperature, +20°C ambient, using water.
3. 115V units. 220V units have a 1200 watt heater.
4. 115V units. 220V units measure 4 3/4 x 6 x 4 3/4 inches (12.1 x 15.2 x 12.1 centimeters). Work area for both units measured between the reservoir baffle's fill lines.
5. 115V units. 220V units are 1.3 gallons (4.9 liters). Volume for both units measured between the reservoir baffle's fill lines.
6. 115V units. 220V units measure 22 7/8 x 10 3/8 x 15 1/8 inches (58.1 x 26.4 x 38.4 centimeters).

Section III Installation

Site

The unit should be located on a sturdy table or bench top. Ambient temperatures should be inside the range of +10°C to +35°C.



Never place the unit in a location where excessive heat, moisture, or corrosive materials are present.

A minimum clearance of 30 centimeters (12 inches) between the rear of the unit and the nearest wall is required for adequate ventilation through the pump box. This space will also accommodate the pump connections and the tap water cooling coil connections.

Excessively dusty areas should be avoided and a periodic cleaning schedule should be instituted (see Section VI, Cleaning).

Electrical Requirements



The unit construction provides extra protection against the risk of electric shock by grounding appropriate metal parts. The extra protection may not function unless the power cord is connected to a properly grounded outlet. It is your responsibility to assure that a proper ground connection is provided.

Refer to the serial number label on the rear of the unit to identify the specific electrical requirements of your unit.

Ensure the voltage of the power source meets the specified voltage, ±10%.

The unit is equipped with main circuit protection and thermal protectors for each branch.



For 220 - 240 volt units supplied without a line cord, use a harmonized (HAR) grounded 3-conductor cord, type H 0 5 V V - F , with conductors listed below. A suitable cord end is required for connecting to the equipment (see unit socket) and must terminate with an IEC approved plug for proper connection to power supply.

Nominal 1.0 mm^2 cross section rated 10 Amps Unit Socket: IEC - 320 C13.

Plumbing Requirements



To prevent damage to the plumbing lines, always support the ¾" fittings while installing/removing the pumping caps and lines.

Hose Connections
The pump connections are located at the rear of the pump box and are labelled PUMP INLET and PUMP OUTLET. These connections are ¼" MPT fittings. The unit is supplied with hose barbs which accept 3/8" ID tubing.

Flexible tubing, if used, should be of heavy wall or reinforced construction. Make sure all tubing connections are securely clamped. Avoid running tubing near radiators, hot water pipes, etc. If substantial lengths of tubing are necessary, insulation may be required for improved temperature control.

It is important to keep the distance between the unit and your application as short as possible and to use the largest diameter tubing practical. Tubing should be straight and without bends. If diameter reductions are required, they should be made at your application, not at the unit.

Drain
A drain is located on the rear of the unit. The drain on 60 Hz units has a ¼" MPT fitting. The drain is supplied with a cap plug.

50 Hz units have a knurled valve fitting for a drain. To drain the bath, turn the fitting one turn counterclockwise.

Fluids



Never use flammable or corrosive fluids with this unit.

The selected fluid must have a viscosity of 50 centistokes or less at the lowest operating temperature. Filtered tap water is the recommended fluid for operation from +7°C to +80°C.

Below +7°C, a 50/50 mixture, by volume, of filtered tap water and laboratory grade ethylene glycol is suggested.

Above +80°C, the user is responsible for fluids used.

Filling Requirements

The bath work area has a high and low level marker to guide filling. The markers are 2.5 centimeter horizontal slits located in the center of the stainless steel baffle that separates the work area and the pump assembly. The correct fluid level falls between these two markers.



If the correct fluid level is not maintained, the heater will be exposed and may become damaged.

When pumping to an external system, keep extra fluid on hand to maintain the proper level as the circulating lines and external system are filled.



Never run the unit when the work area is empty. Avoid overfilling. Overfilling the bath may damage the insulation, and affects stability as well as low-end performance.

Section IV Temperature Controllers

Digital Temperature Controller

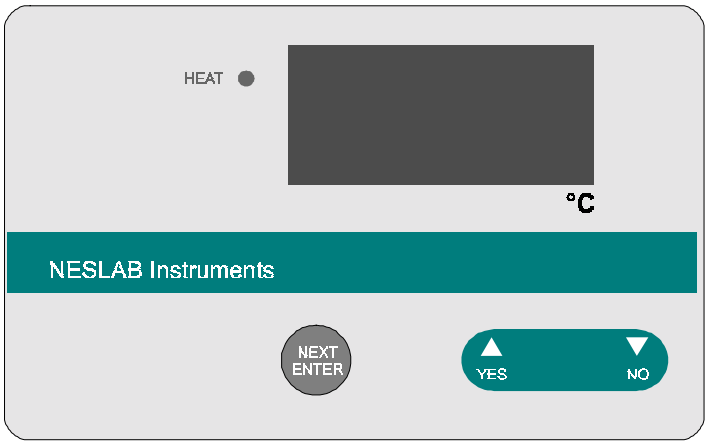

Start Up
Before starting the unit, double check all electrical and plumbing connections and make sure the work area has been properly filled with bath fluid.

To start the unit, place the circuit breaker on the rear of the controller to the **I** position. The pump will start and the digital display will indicate the temperature of the bath fluid.

Place the Refrigeration Switch to the ON position. The unit will control to the entered setpoint.

NOTE: Only 115V units are designed for full range cooling. On 220V units the refrigeration system is designed to operate up to a temperature of +35°C.

On 220V units above +35°C, ensure the refrigeration switch is OFF.

The HEAT LED indicates the controller is adding heat to the reservoir fluid, operating in the heat band. The indicator is on continuously when the controller is operating in the heat band and flashes, with a 50% duty cycle over 2 seconds, when operating in the heat band proportional band.

The digital controller controls temperature using a PID (Proportional-Integral-Derivative) algorithm. It is designed with self-diagnostic features and easy to use operator interface.

NEXT ENTER
Use this key to accept and save changes.

YES, ▲
This dual purpose key is used to answer Yes to Y/N questions or to increment numerical values upward for setting numeric values.

NO, ▼
This dual purpose key is used to answer No to Y/N questions or to decrement numerical values downward for setting numeric values.

When the controller is powered it displays the reservoir fluid temperature. Press the **NEXT ENTER** key to view the setpoint. The display flashes between **SP** and the actual setpoint number. If desired, use the **YES** and **NO** keys to change the setpoint. The display flashes as soon as either key is depressed. Once the desired setpoint is displayed, press the **NEXT ENTER** key.

NOTE: The controller will not use the new value until the **NEXT ENTER** key is depressed and the display stops flashing. The controller will not allow you to enter a value above the maximum or below the minimum value, or any illegal value. If you try to enter an illegal value the display will revert to its original value when the last digit was entered.

If the **NEXT ENTER** key is not depressed within one minute, the controller will time out and the new value will not be accepted. The controller will revert to the previous value.

NOTE: Error codes are addressed in Section V, Maintenance and Troubleshooting.

High Temperature Safety

The unit is equipped with an adjustable high temperature safety located on the rear of the control box. The safety prevents the heater from reaching excessively high temperatures that can cause serious damage to the unit. A single temperature sensor, located on the heater coils in the bath, is used as a monitor.

A high temperature fault occurs when the temperature of the sensor exceeds the set temperature limit. In the event of a fault, the FAULT lamp will illuminate and the unit will shut down. The cause of the fault must be identified and corrected before the unit can be restarted.

The safety is not preset and must be adjusted during initial installation. The safety can be set for a temperature range of +50°C to +180°C.

To set the safety, locate the adjustment dial and turn it fully clockwise. Turn the ON/OFF switch OFF then ON.

Start the unit. Adjust the temperature setpoint for a few degrees higher than the highest desired operating temperature and allow the bath to stabilize at the temperature setpoint. Turn the dial counterclockwise until you hear a click and the unit shuts down. The FAULT lamp on the front of the pump box will light to indicate a fault has occurred.

The safety is now set.

Allow the fluid temperature to cool below the cutout temperature then, without moving the adjustment dial, turn the main circuit protector OFF then ON.

If a fault ever occurs, once the cause is identified and corrected, turn the main circuit protector OFF then ON to reset the safety.

Section V Maintenance & Troubleshooting

Cleaning

Periodically clean the case and stainless steel bath using a mild soapy solution. **Do not use steel wool; it is too abrasive and will lead to rusting.** Dry the bath using a soft cloth.

For proper operation, the unit needs to pull substantial amounts of air through the condenser. A build up of dust or debris on the fins of the condenser will lead to a loss of cooling capacity. Periodic cleaning of the condenser is necessary.

The frequency of the cleaning depends on the operating environment. After initial installation, we recommend a monthly visual inspection. After several months, the frequency of cleaning will be established.

Algae

To restrict the growth of algae in the bath, it is recommended that the bath cover be kept in place and that all circulation lines be opaque. This will minimize the entrance of light required for the growth of most common algae.

Thermo NESLAB recommends the use of Chloramine-T, 1 gram per 3.5 liters.

Error Codes

The controller also has the capability to display error codes. The codes are:

Display	Indication
Er 16	Bad calibration data, see Controller Displays
Er 25	Shorted RTD1
Er 26	Open RTD1
Er 19	Hit High temperature limit exceeded, see Controller Displays
Er 21	Lot Low temperature limit exceeded, see Controller Displays

The unit will continue to run with any of the above codes. If any other code appears contact Thermo NESLAB customer service, see Preface.

Controller Displays

An alphanumeric display presents numeric readings of various operating conditions within the bath. Display function is selected by pressing the appropriate keys shown below and the next two pages.

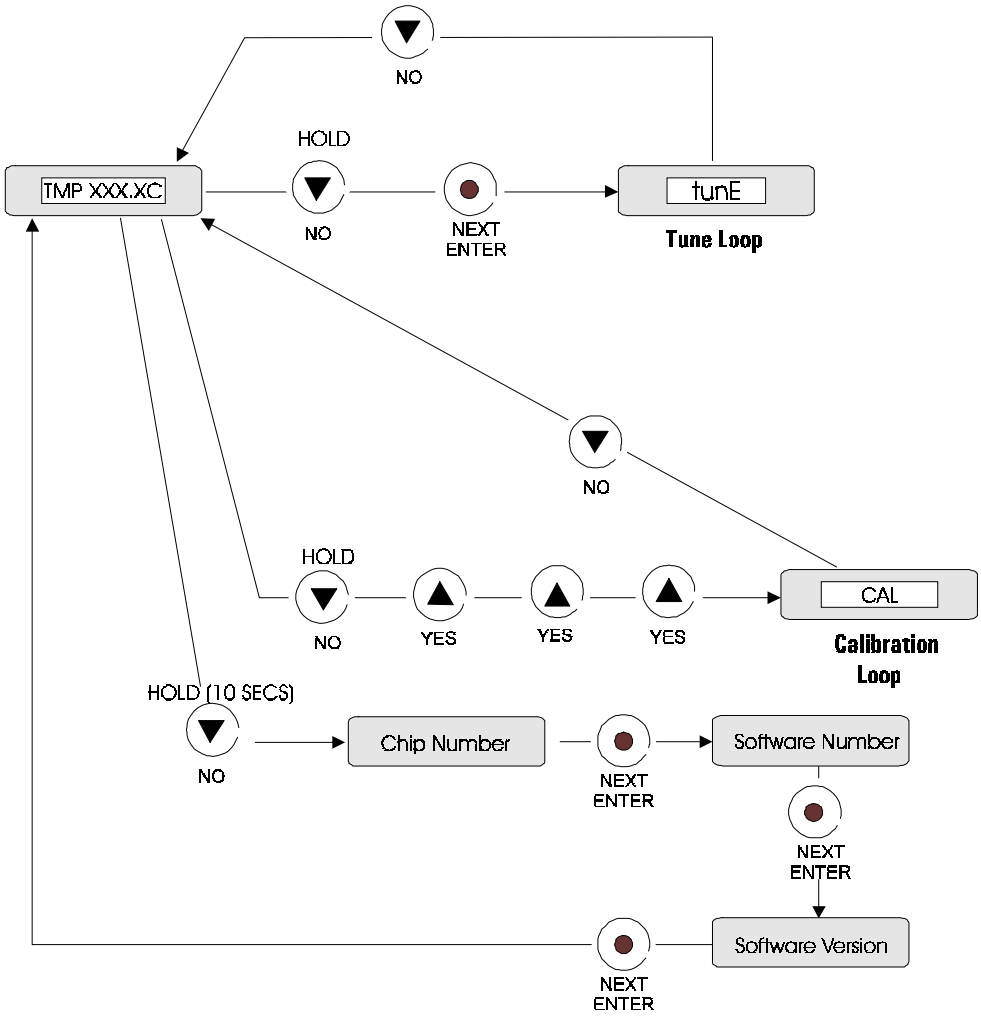

Tune Loop
This loop is used to adjust the controller's PID parameters and set the high/ low temperature limits.

Enter the loop from the reservoir temperature display by pressing and holding the NO key, then press the NEXT ENTER key. Use the YES/NO keys to adjust the values. Press the NEXT ENTER key twice to accept the new value.

While in the loop, if any key is not pressed during a one minute time span, the controller will automatically return to the reservoir temperature display.

NOTE: If the unit exceeds either temperature limit, the appropriate error message will flash, see page 9. The unit will not shut down (unless the temperature exceeds the high temperature cutout setting, see page 8).

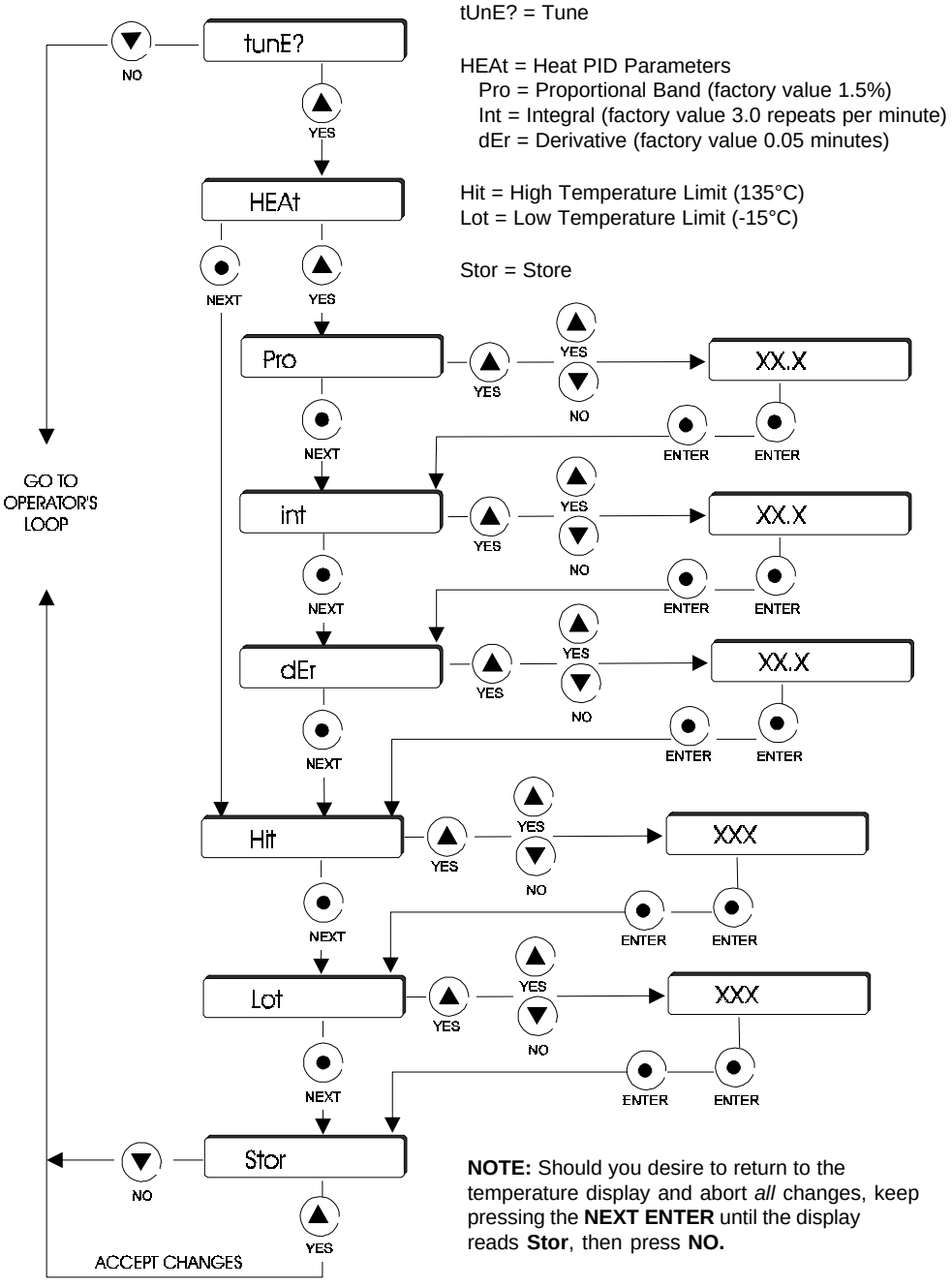

Calibration Loop
This loop is used to calibrate the controller's internal temperature sensor.

To calibrate the sensor install a calibrated reference thermometer in the bath. Adjust the setpoint to an appropriate high-end temperature.

Once the bath reaches the setpoint and stabilizes, go to the Calibration Loop by pressing and holding the NO key while pressing the YES key three times. Enter the actual reference thermometer reading at the r1H prompt. Store the change.

Return to the reservoir temperature display. Adjust the setpoint to an appropriate low-end temperature. Once the bath reaches the setpoint and stabilizes, return to the Calibration Loop and enter the reference thermometer reading at the r1L prompt. Store the change.

Do not pick points that are outside the safe operating limits of the fluid in your application. For example with a water bath, 90°C and 5°C would be typical calibration points.

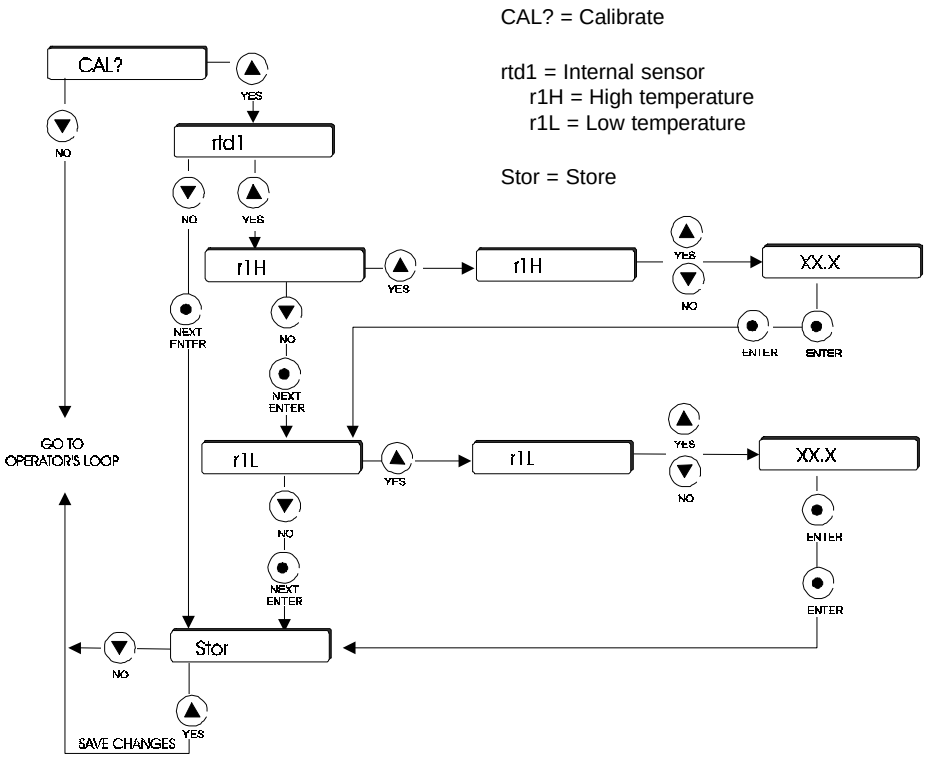

Checklist

Unit will not start
Make sure the voltage of the power source meets the specified voltage, ±10%. Refer to the serial number label on the rear of the unit to identify the specific electrical requirements of your unit.

Check the high temp safety. If the FAULT light is on, ensure the fluid level in the bath is between baffle marks and the high temp setting is greater than the bath temperature. Turn the main circuit protector OFF then ON. Attempt to restart.

No external circulation
Check for obstructions, kinks, or leaks in the circulation tubing.

Circulation will cease when the pump head pressure has been exceeded.

Check the high temp safety. If the FAULT light is on, ensure the fluid level in the bath is between baffle marks and the high temp setting is greater than the bath temperature. Turn the ON/OFF switch OFF then ON. Attempt to restart.

Loss of Cooling Capacity
Be sure the refrigeration switch is on and the green refrigeration indicator is illuminated.

Be sure the cooling capacity of the unit has not been exceeded if circulating to an external system.

When the unit is shut off, wait approximately five minutes before restarting. This allows time for the refrigeration pressures to equalize. If the pressures are not allowed to equalize, the compressor will short-cycle (clicking sound) and no cooling will occur.

Proper ventilation is required for heat removal. Make sure ventilation through the unit is not impeded and free of dust and debris.

Ice build up on the cooling coil can act as insulation and lower the cooling capacity. Raise the temperature of the bath to deice the cooling coil and increase the concentration of non-freezing fluid.

Service Assistance

If, after following these troubleshooting steps, your unit fails to operate properly, contact our Service Department for assistance. Our Service Department can also provide you with list of spare parts for your unit (see Preface, After-sale Support). Before calling, *please* obtain the following information:

BOM number
Serial Number
Voltage of power source

Section VI Diagrams

Flow Diagram

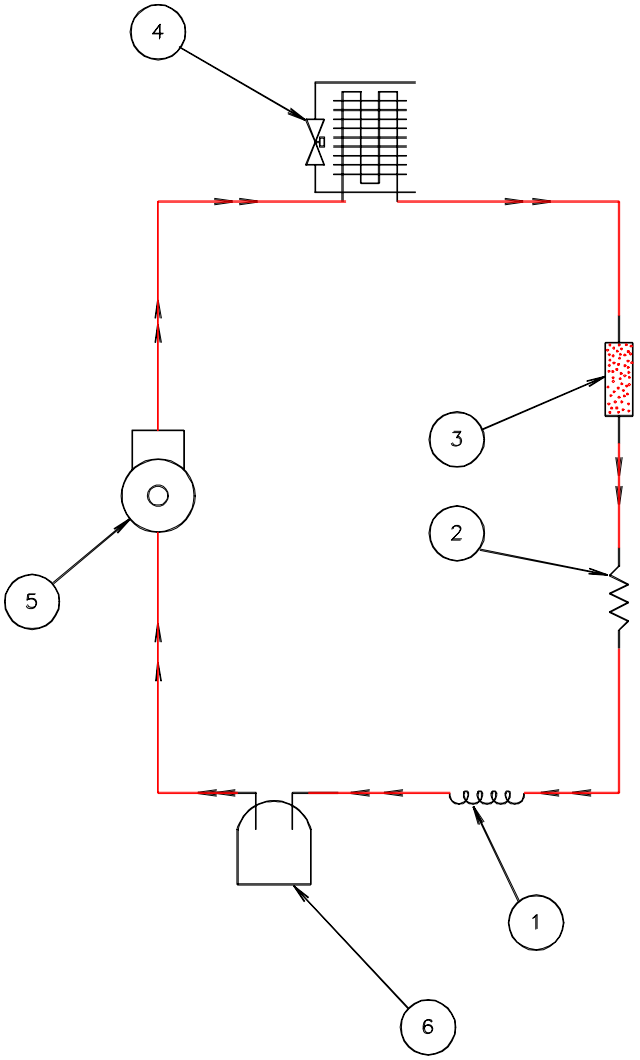

6	1	ACCUMULATOR		
5	1	COMPRESSOR		
4	1	CONDENSER		
3	1	DRYER		
2	1	CAPILLARY TUBE		.036 DIA. x 5 FT.
1	1	TANK COIL		

JOLIN 8-4-94
McDONOUGH 8-9-94
SPENCER 8-10-94

AS LISTED

REFRIGERATION
FLOW DIAGRAM
RTE-101

A F00428 A

NTS 1 OF 1

Wiring Diagram 60Hz Units

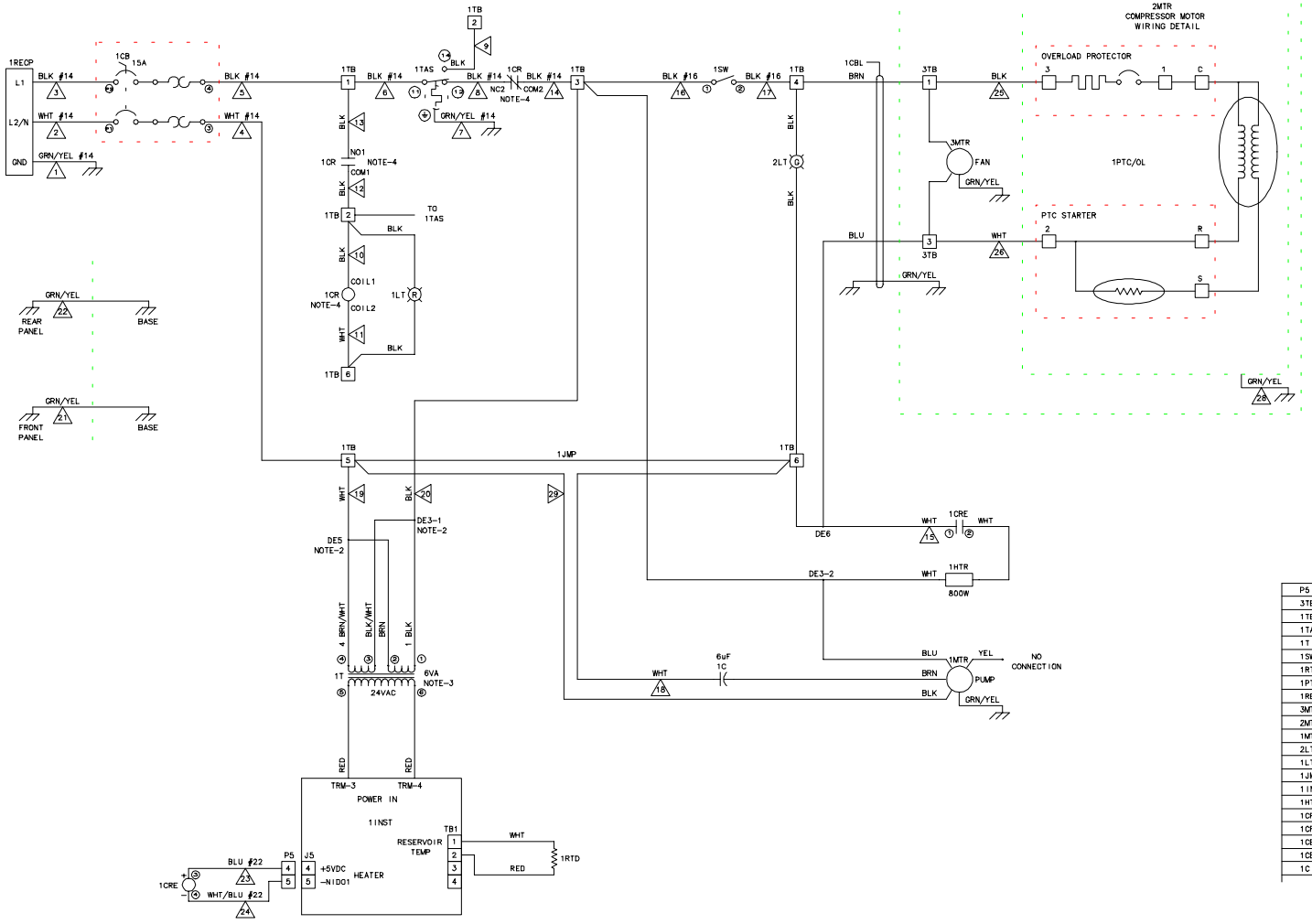

P5	CONNECTOR, PLUG	010634	8P
3TB	TERMINAL BLOCK	001582	REFRIGERATION ASSEMBLY
1TB	TERMINAL BLOCK	026630	
1TAS	TEMPERATURE ACTUATED SWITCH	025913	HIGH TEMPERATURE
1T	TRANSFORMER	025987	
1SW	SWITCH, POWER MAIN	001638	
1RTD	RESISTIVE TEMPERATURE DEVICE	005720	
1PTC/OL	COMPRESSOR PTC/OL	007541	
1RECP	RECEPTACLE	001392	
3MTR	MOTOR, FAN	007401	
2MTR	MOTOR, COMPRESSOR	007268	
1MTR	MOTOR, PUMP	001839	EXTERNAL ROTOR
2LT	LIGHT, REFRIGERATION ON	025677	GREEN
1LT	LIGHT, FAULT HEATER	005922	RED
1JMP	JUMPER, TERMINAL BLOCK	024952	
1INST	INSTRUMENT	025413	
1HTR	HEATER	005048	800W, 115V
1CRE	CONTROL RELAY ELECTRONIC	010423	
1CR	CONTROL RELAY, FAULT	006082	
1CBL	CABLE, 16/3	001387	
1CB	CIRCUIT BREAKER	000342	15A
1C	CAPACITOR	005774	6uF

A7C3 C7,8 B5 B5	A	ADDED: 1PTC/OL AND P5 TO P/L; PANEL GNDS;12-24-98 VARIOUS WIRE COLORS/GAGES. CHANGED: VARIOUS WIRE COLORS. DELETED: VARIOUS DEAD END CONNECTORS. ECO 12586		BAJ	JCH REP
	B	ADDED: WIRE KIT NOS #1-22,#25. ECO 13032	1-20-99	BAJ	KLJ REP
A7	C	ADDED: WIRE KITS #23 & #24. CHANGED: P5 WAS P/N 010069. ECO 13374	4-5-99	BAJ	JCH REP
B5 D5 C5 B5 C7	D	ADDED: WIRE KIT #29. CHANGED: 1TB P/N WAS 026351; 1JMP WAS 5JMP; 2JMP WAS 3JMP; 1MTR BLK WIRE WAS TO 1TB-8 (PREVIOUSLY 1TB-6); VARIOUS TERMINAL BLOCK NUMBERS. DELETED: 1TB-8 AND 1JMP FROM 1TB-6 (PREVIOUSLY 1TB-9). ECO 13643	6-4-99	BAJ	CLG CAD
B5 B5 B6 C7C8	E	CHANGED: 1CBL BLU WIRE WAS TO 1TB-6; 1MTR BLU WIRE WAS TO 1TB-3; 1C WHT WIRE WAS TO A DEADEND CONNECTOR; 1TB-2 WAS 1TB-10; 1TB-3 WAS 1TB-2; 1TB P/N WAS 026330. ECO 13973	9-9-99	BAJ	CLG CAD
B5 C6 D6	F	CHANGED: 1JMP WAS 1-5JMP IN P/L; 1C WHT WIRE WAS TO 1TB-5; 1JMP WAS 2JMP. DELETED: 1JMP ON 1TB-3. ECO 14527	3-3-00	BAJ	

NOTES:

1. ALL WIRES ARE #18 AWG UNLESS OTHERWISE SPECIFIED.
2. APPROPRIATE DEAD END CONNECTORS WHERE REQUIRED.
3. COMPONENT 1T (025987)
   THERMAL FUSE, 1 TIME
   LINE 1,3, 133°C
4.

	MANUFACTURERS	
	MAGNECRAFT	MIDTEX
CONTACT TYPE	PIN DESIGNATION	PIN DESIGNATION
COM 1	7	5
NC 1	1	1
NO 1	4	3
COM 2	9	6
NC 2	3	2
NO 2	6	4
COIL 1,2	A,B	A,B

5. DIAGRAM PARTS LIST USED AS REFERENCE ONLY.

JOLIN	9-15-98	
PRATT	10-15-98	
PRATT	10-15-98	
AS LISTED		RTE-101 D2 115V, 60HZ
D		6.3722 F
6.3486, 6.3696		1 OF 1

Wiring Diagram 50Hz Units

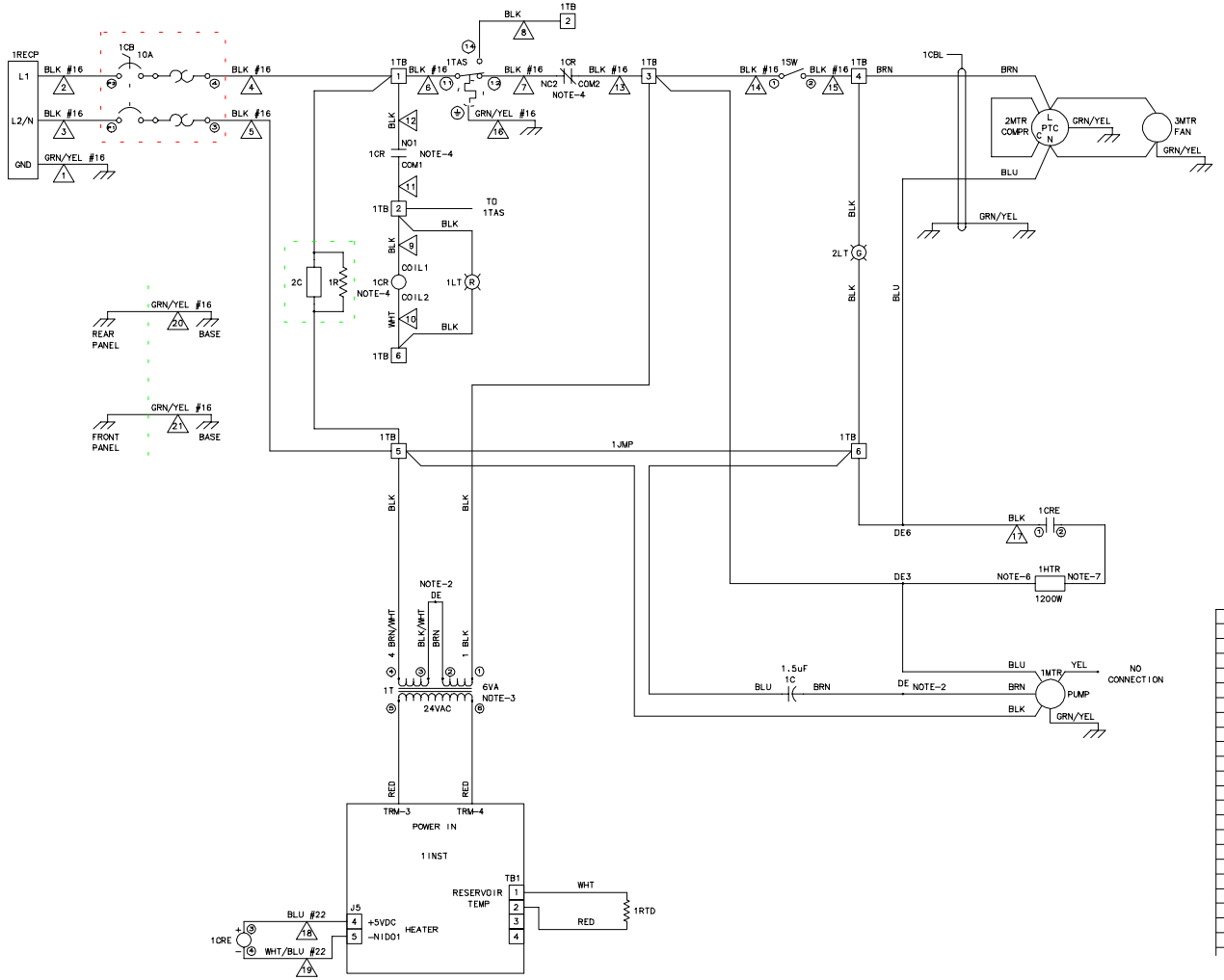

B5	A	ADDED: NOTE-6,7. ECO 12725	11-30-98	BAJ	KRD	DE
C8 D4-7 D4 B5,6 B5 B5	B	ADDED: PANEL/BASE GNDS; 1PTC TO P/L. CHANGED: VARIOUS WIRE GAGES TO #16 WAS #18; 2,3MTR DETAIL RECONFIGURED; VARIOUS WIRE COLORS. DELETED: DEAD END CONN BETWEEN 1TB-6 AND 1MTR; DEAD END CONN BETWEEN 1TB-3 AND 1HTR. ECO 12858	1-6-99	BAJ	JCH	REP
ALL	C	ADDED; WIRE KIT NOS. 1-21. ECO 13096	1-28-99	BAJ	KRD	REP
D5 C5 B5 C6	D	CHANGED: 1TB P/N WAS 026551; 1JMP WAS 5JMP; 2JMP WAS 3JMP; 1MTR BLK WIRE WAS TO 1TB-5 (PREVIOUSLY 1TB-6); VARIOUS TERMINAL BLOCK NUMBERS. DELETED: 1TB-8 AND 1JMP OFF OF 1TB-6 (PREVIOUSLY 1TB-9). ECO 13043	6-4-99	BAJ	CLG	CAD
D6C6 B4 B5 C6	E	CHANGED: 1TB-2 WAS 1TB-10; 1TB-3 WAS 1TB-2; 2MTR BLU WIRE WAS TO 1TB-6; 1MTR BLU WIRE WAS TO 1TB-3; 1C BLU WIRE WAS TO A DEADEND CONNECTOR; 2C P/N WAS 000698; 1R WAS 000699; 1TB WAS 026330. ECO 13973	9-9-99	BAJ	CLG	CAD
B5 C5 D5	F	CHANGED: 1JMP WAS 1-5JMP IN P/L; 1C BLU WIRE WAS TO 1TB-5; 1JMP WAS 2JMP. DELETED: 1JMP ON 1TB-3. ECO 14527	3-3-00	BAJ		

NOTES:

1. ALL WIRES ARE #18 AWG UNLESS OTHERWISE SPECIFIED.
2. APPROPRIATE DEAD END CONNECTORS WHERE REQUIRED.
3. COMPONENT 1T (025987)
   THERMAL FUSE, 1 TIME
   LINE 1,3, 133°C
4.

	MANUFACTURERS		
	MAGNECRAFT	MIDTEX	OMRON
CONTACT TYPE	PIN DESIGNATION	PIN DESIGNATION	PIN DESIGNATION
COM 1	7	5	5
NC 1	1	1	1
NO 1	4	3	3
COM 2	9	6	6
NC 2	3	2	2
NO 2	6	4	4
COIL1,2	A,B	A,B	7,8

5. DIAGRAM PARTS LIST USED AS REFERENCE ONLY.
6. WIRE COLOR MAY BE WHITE OR RED.
7. WIRE COLOR MAY BE WHITE OR BROWN.

3TB	TERMINAL BLOCK	001582	REFRIGERATION ASSEMBLY
1TB	TERMINAL BLOCK	026630	
1TAS	TEMPERATURE ACTUATED SWITCH	025913	HIGH TEMPERATURE
1T	TRANSFORMER	025987	
1SW	SWITCH, POWER MAIN	001638	
1RTD	RESISTIVE TEMPERATURE DEVICE	005720	
1RECP	RECEPTACLE	001392	
1R	RESISTOR	000698	
1PTC	POSITIVE TEMP. CO-EFFICIENT	001487	THERMAL/COMPR OVERLOAD
3MTR	MOTOR, FAN	001508	
2MTR	MOTOR, COMPRESSOR	007581	
1MTR	MOTOR, PUMP	001374	EXTERNAL ROTOR
2LT	LIGHT, REFRIGERATION ON	025678	GREEN
1LT	LIGHT, FAULT HEATER	005923	RED
1JMP	JUMPER, TERMINAL BLOCK	024952	
1INST	INSTRUMENT	025413	
1HTR	HEATER	001149	1200W, 220V
1CRE	CONTROL RELAY ELECTRONIC	010423	
1CR	CONTROL RELAY, FAULT	000925	
1CBL	CABLE, 16/3	001387	
1CB	CIRCUIT BREAKER	024974	10A
2C	CAPACITOR, LINE FILTER	000699	
1C	CAPACITOR	001811	1.5uF

JOLIN 9-15-98
PRATT 10-15-98
PRATT 10-15-98

AS LISTED

RTE-101
D2
220V, 50HZ

D 6.3719 F

6.3722, 6.3696 ____ 1 OF 1

WARRANTY

Thermo NESLAB Instruments, Inc. warrants for 12 months from date of shipment any Thermo NESLAB unit according to the following terms.

Any part of the unit manufactured or supplied by Thermo NESLAB and found in the reasonable judgment of Thermo NESLAB to be defective in material or workmanship will be repaired at an authorized Thermo NESLAB Repair Depot without charge for parts or labor. The unit, including any defective part must be returned to an authorized Thermo NESLAB Repair Depot within the warranty period. The expense of returning the unit to the authorized Thermo NESLAB Repair Depot for warranty service will be paid for by the buyer. Thermo NESLAB's responsibility in respect to warranty claims is limited to performing the required repairs or replacements, and no claim of breach of warranty shall be cause for cancellation or recision of the contract of sales of any unit.With respect to units that qualify for field service repairs, Thermo NESLAB's responsibility is limited to the component parts necessary for the repair and the labor that is required on site to perform the repair. Any travel labor or mileage charges are the financial responsibility of the buyer.

The buyer shall be responsible for any evaluation or warranty service call (including labor charges) if no defects are found with the Thermo NESLAB product.

This warranty does not cover any unit that has been subject to misuse, neglect, or accident. This warranty does not apply to any damage to the unit that is the result of improper installation or maintenance, or to any unit that has been operated or maintained in any way contrary to the operating or maintenance instructions specified in Thermo NESLAB's Instruction and Operation Manual. This warranty does not cover any unit that has been altered or modified so as to change its intended use.

In addition, this warranty does not extend to repairs made by the use of parts, accessories, or fluids which are either incompatible with the unit or adversely affect its operation, performance, or durability.

Thermo NESLAB reserves the right to change or improve the design of any unit without assuming any obligation to modify any unit previously manufactured.

THE FOREGOING EXPRESS WARRANTY IS IN LIEU OF ALL OTHER WARRANTIES, EXPRESSED OR IMPLIED, INCLUDING BUT NOT LIMITED TO WARRANTIES OR MERCHANTABILITY AND FITNESS FOR A PARTICULAR PURPOSE.

Thermo NESLAB'S OBLIGATION UNDER THIS WARRANTY IS STRICTLY AND EXCLUSIVELY LIMITED TO THE REPAIR OR REPLACEMENT OF DEFECTIVE COMPONENT PARTS AND Thermo NESLAB DOES NOT ASSUME OR AUTHORIZE ANYONE TO ASSUME FOR IT ANY OTHER OBLIGATION.

Thermo NESLAB ASSUMES NO RESPONSIBILITY FOR INCIDENTAL, CONSEQUENTIAL, OR OTHER DAMAGES INCLUDING, BUT NOT LIMITED TO LOSS OR DAMAGE TO PROPERTY, LOSS OF PROFITS OR REVENUE, LOSS OF THE UNIT, LOSS OF TIME, OR INCONVENIENCE.

This warranty applies to units sold in the United States. Any units sold elsewhere are warranted by the affiliated marketing company of Thermo NESLAB Instruments, Inc. This warranty and all matters arising pursuant to it shall be governed by the law of the State of New Hampshire, United States. All legal actions brought in relation hereto shall be filed in the appropriate state or federal courts in New Hampshire, unless waived by Thermo NESLAB.

Endocal RTE-Series
Refrigerated Bath/Circulator

NESLAB Manual P/N 013853
Rev. 03/22/93

Instruction and Operation Manual

Endocal RTE-Series Refrigerated Bath/Circulator Instruction and Operation Manual

Table of Contents

PREFACE

Unpacking ..... 1`
Warranty 1
After-sale Support 1

SECTION I
Safety

Warnings 3

SECTION II
General Information

Description 4
Specifications 4

SECTION III
Installation

Site 6
Electrical Requirements 6
Plumbing Requirements 7
Fluids 9
Filling Requirements 9
Thermometer 9

SECTION IV
Controllers

Controllers 10
Controller Mounting 10
Controller Connection 10
Refrigeration Control 10
Boost Heater 11
Basic 12
Analog 12
Digital 13
Programmable 14

SECTION V
Special Features

High Temperature/Low Liquid Level Safety 18
Accessory Receptacle 19

SECTION VI
Maintenance

Service Contracts 23
Cleaning 23
Algae 23

SECTION VII
Troubleshooting

Checklist 23
Service Assistance 24
Technical Support 24

SECTION VIII
Warranty 25

Preface

Unpacking

Retain all cartons and packing material until the unit is operated and found to be in good condition. The unit control box is packed in a separate carton. Be sure to locate this separate carton; do not dispose of it by mistake.

If the unit shows external or internal damage, or does not operate properly, contact the transportation company and file a damage claim. Under ICC regulations, this is your responsibility.

Warranty

All NESLAB units are shipped with a warranty card. The top portion of the card remains with the unit. The bottom portion must be filled out and returned to NESLAB.

Units have a warranty against defective parts and workmanship for one full year from date of shipment. See back page for more details.

After-sale Support

NESLAB is committed to customer service both during and after the sale. If you have questions concerning the operation of your unit, contact our Sales Department. If your unit fails to operate properly, or if you have questions concerning spare parts or Service Contracts, contact our Service Department. Before calling, please obtain the following information from the unit's serial number label:

- *part number*
- *serial number*

Section I Safety

Warnings

Make sure you read and understand all instructions and safety precautions listed in this manual before installing or operating your unit. If you have any questions concerning the operation of your unit or the information in this manual, contact our Sales Department.

Performance of installation, operation, or maintenance procedures other than those described in this manual may result in a hazardous situation and may void the manufacturer's warranty.

Transport the unit with care. Sudden jolts or drops can damage the refrigeration lines.

Observe all warning labels.

Never remove warning labels.

Never operate damaged or leaking equipment.

Never operate the unit without bath fluid in the bath.

Always turn off the unit and disconnect the line cord from the power source before performing any service or maintenance procedures, or before moving the unit.

Always empty the bath before moving the unit.

Never operate equipment with damaged line cords.

Refer service and repairs to a qualified technician.

In addition to the safety warnings listed above, warnings are posted throughout the manual. These warnings are designated by an exclamation mark inside an equilateral triangle with text highlighted in bold print. Read and follow these important instructions. Failure to observe these instructions can result in permanent damage to the unit, significant property damage, personal injury or death.

Section II General Information

Description

The Endocal RTE-Series Refrigerated Bath/Circulators are designed to provide temperature control for applications requiring a fluid work area or pumping to an external system.

The units consist of an air-cooled refrigeration system, circulation pump, stainless steel bath, a work area cover, and a temperature controller.

Specifications

	RTE-110	RTE-210	RTE-220
Temperature Range			
Basic controller	-25°C to +100°C	-24°C to +100°C	-23°C to +100°C
Analog controller	-25°C to +100°C	-24°C to +100°C	-23°C to +100°C
Digital controller	-30°C to +130°C	-28°C to +130°C	-26°C to +130°C
Programmable controller	-30°C to +130°C	-28°C to +130°C	-26°C to +130°C
Temperature Stability[1,2]		±0.1°C	
Temperature Stability[1,3]		±0.01°C	
Cooling Capacity[1,4]	>500 watts at +20°C >300 watts at 0°C >175 watts at -10°C	>475 watts at +20°C >300 watts at 0°C >150 watts at -10°C	>475 watts at +20°C >300 watts at 0°C >125 watts at -10°C
Pump Capacity[1]	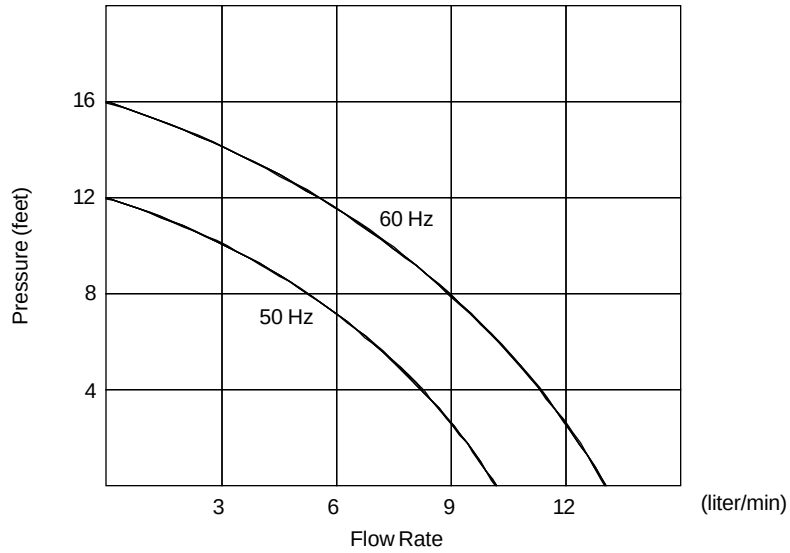		

1. Specifications listed for units operating at +20°C bath temperature, +21°C (+70°F) ambient, with tap water as bath fluid.
2. Temperature stability of units with a Basic temperature controller.
3. Temperature stability of units with an Analog, Digital or Programmable temperature controller.
4. 60 Hz units. Derate cooling capacity 17% for 50 Hz units.

	RTE-110	RTE-210	RTE-220
Heater[5]			
(Watts)			
Main	800		800
Boost	NA		850
Bath Work Area			
(H x W x D)			
Inches	5 x 5 x 5.75	10 x 10 x 5.75	10 x 10 x 9
Centimeters	12.7 x 12.7 x 14.6	25.4 x 25.4 x 14.6	25.4 x 25.4 x 22.8
Bath Volume			
Gallons	1.3	3.2	5.3
Liters	5.0	12.3	20.2
Unit Dimensions[6]			
(H x W x D)			
Inches	20 x 8.785 x 12.375	20 x 12.375 x 17.25	23 x 12.375 x 17.25
Centimeters	49.8 x 22.5 x 31.4	49.8 x 31.4 x 43.8	58.4 x 31.4 x 43.8
Unit Dimensions[7]			
(H x W x D)			
Inches	25 x 8.785 x 12.375	25 x 12.375 x 17.25	28 x 12.375 x 17.25
Centimeters	63.5 x 22.5 x 31.4	63.5 x 31.4 x 43.8	71.1 x 31.4 x 43.8
Shipping Weight			
Pounds	70	90	98
Kilograms	32	41	45

5. Model RTE-220 with Basic temperature controllers do not have a boost heater.
6. Units equipped with Basic temperature controllers.
7. Units equipped with Analog, Digital, or Programmable temperature controllers.

Section III Installation

Site

Locate the unit on a sturdy table or bench top. Ambient temperatures should be inside the range of +50°F to +80°F (+10°C to +27°C).



Never place the unit in a location where excessive heat, moisture, or corrosive materials are present.

The unit has an air-cooled refrigeration system. Air is drawn through the front panel and discharged through the rear panel. The unit must be positioned so the air intake and discharge are not impeded. A minimum clearance of 12 inches (30 centimeters) at the front and rear of the unit is necessary for adequate ventilation. Inadequate ventilation will reduce cooling capacity and, in extreme cases, can cause compressor failure.

Excessively dusty areas should be avoided and a periodic cleaning schedule should be instituted (see Section VI, Cleaning).

The unit will retain its full rated capacity in ambient temperatures up to approximately +75°F (+24°C). Above +75°F, derate the cooling capacity 1% for every 1°F above +75°F, to a maximum ambient temperature of +95°F. In terms of Celsius, derate the cooling capacity 1% for every 0.5°C above +24°C, to a maximum ambient temperature of +35°C.

Electrical Requirements

Refer to the serial number label on the rear of the unit to identify the specific electrical requirements of your unit.

Ensure the voltage of the power source meets the specified voltage, ±10%.

The unit construction provides extra protection against the risk of electric shock by grounding appropriate metal parts. The extra protection may not function unless the power cord is connected to a properly grounded outlet. It is the user's responsibility to assure a proper ground connection is provided.

Plumbing Requirements

Hose Connections

The pump connections are located at the rear of the pump box and are labelled PUMP INLET and PUMP OUTLET. These connections are stainless steel serrated hose connections that accept 3/8 inch ID flexible tubing and two teflon O-rings.

Flexible tubing, if used, should be of heavy wall or reinforced construction. Make sure all tubing connections are securely clamped. Avoid running tubing near radiators, hot water pipes, etc. If substantial lengths of tubing are necessary, insulation may be required to prevent loss of cooling capacity.

Tubing and insulation are available from NESLAB. Contact our Sales Department for more information (see Preface, After-sale Support).

It is important to keep the distance between the unit and the external system as short as possible, and to use the largest diameter tubing practical. Tubing should be straight and without bends. If diameter reductions must be made, make them at the inlet and outlet of the external system, not at the unit.

If substantial lengths of cooling lines are required, they should be pre-filled with bath fluid before connecting them to the unit.

Pumping

The pump is designed to deliver a flow of 13 liters/minute (3.5 gallons minute) at 0 feet head. To prevent unwanted flow, the bath is supplied with two stainless steel disks which block the PUMP INLET and PUMP OUTLET. The disks must be removed when flow is required. To prevent leaking around the inlet and outlet connections, be sure the two teflon O-rings remain in place. To prevent distortion of the O-rings, only tighten the connections "hand-tight". Once the hose connections are made, the pump must be properly plumbed to an external system. It is important the bath is not in operation until all plumbing work is done.

If the bath is not used for external circulation, make sure the stainless steel disks are in place prior to operating the bath.

Circulating to an open container

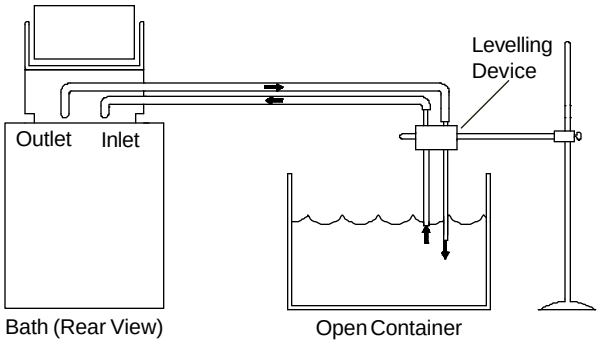

A stainless steel leveling device is available to aid circulation to an open vessel. Contact our Sales Department for more information (see Preface, After-sale Support).

Support the leveling device over the open container with a ringstand. Stagger the tubes in the leveling device so one tube is submerged in the vessel fluid, and the other tube is level with the fluid surface. Connect the deeper tube to the PUMP OUTLET and the other tube to the PUMP INLET.

Adjust the flow rate using the accessory flow control valve connected to the PUMP OUTLET, or by partially restricting the outlet tubing. When properly adjusted, the pump inlet will draw an occasional air bubble to prevent over flow, and the pump outlet will force fluid through the submerged tube to prevent aeration of the vessel.

To avoid siphoning the bath work area when the unit is shut off, lift the leveling device out of the vessel and above the level of the unit.

Circulating through two closed loops

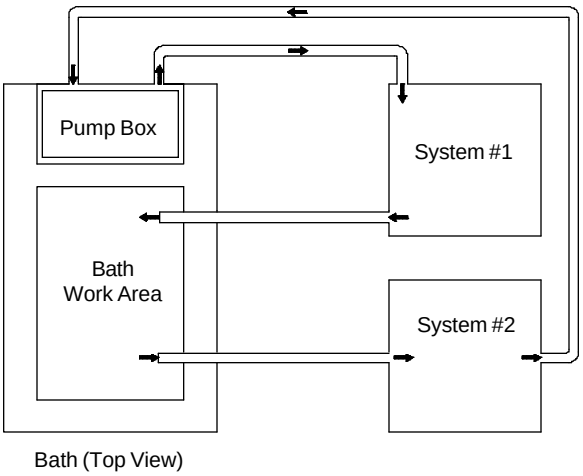

The pump can be used to circulate through two closed loop systems. Connect the shortest practical length of flexible tubing from the PUMP OUTLET to the inlet of external system #1. Connect the outlet of system #1 directly into the bath work area. Connect tubing from the bath work area to the inlet of system #2. Connect the outlet of system #2 to the PUMP INLET.

Drain

The unit is equipped with a drain located at the back of the unit at the base of the bath. The drain consists of a drain port and a drain fitting.

The drain has a 3/8 inch O.D. stainless steel serrated fitting. The fitting will accept 5/16 or 3/8 inch I.D. tubing.

To drain the bath, turn the fitting 1 turn counter-clockwise.

Fluids

The selected fluid must have a viscosity of 50 centistokes or less at the lowest operating temperature.



Never use flammable or corrosive fluids with this unit.

Tap water is the recommended fluid for operation from +8°C to +80°C.

Below +8°C, a 50/50 mixture, by volume, of tap water and laboratory grade ethylene glycol is suggested.

Above +80°C, the user is responsible for fluids used.

Filling Requirements

The bath work area has a high and low level marker to guide filling. The markers are 1 inch horizontal slits located in the center of the stainless steel baffle separating the work area and the pump assembly. The correct fluid level falls between these two markers. Maintain the correct fluid level or the heating and cooling coils will be exposed and may become damaged.

When pumping to an external system, keep extra fluid on hand to maintain the proper level as the circulating lines and external system are filled.



Never run the unit when the work area is empty.

Thermometer

Units with a Basic or Analog temperature controller are equipped with a glass tube thermometer. Insert the thermometer in the grommet located on the left side of the work area.

Section IV Controllers

Controllers

Four standard temperature controllers are available with the unit: Basic, Analog, Digital, and Programmable. This section explain the installation and operation of the controllers.

Controller Mounting

Analog, Digital, and Programmable temperature controllers are designed as separate components from the unit. The controller can be mounted directly

on the pump box, or remotely from the bath. The controller yoke has screw holes allowing the controller to be mounted on a wall. Accessory cables are available from NESLAB for extended remote applications. Contact our Sales Department for more information (see Preface, After-sale Support).

To mount the controller on top of the pump box, locate the restraining clip in the center of the controller yoke. Position it on the mounting pin located in the center top plate of the pump box. Once secured, the controller can be tilted or swiveled to meet your needs.

Controller Connection

On units with Analog, Digital, or Programmable controllers, the components in the bath will accept a signal from the controller only when the controller and the pump box have been properly connected. Connect the 15 pin plug at the end of the controller's cable to the 15 pin socket on the rear of the pump box. Once the connection is made, the unit is ready for operation.

Refrigeration Control

On units with Basic temperature controllers, the status of the refrigeration system is controlled by the REFRIG switch on the front of the control/pump box. When operating in the range of -30°C to +45°C (-30°C to +35°C for 220v/50Hz units), the refrigeration must be on: place the switch in the TEMP<45°C position. When operating in the range of +45°C to +100°C (+35°C to +100°C for 220v/50Hz units), the refrigeration must be off: place the switch in the TEMP>45° position. The REFRIG lamp indicates the status of the refrigeration system.

On units with Analog, Digital, or Programmable temperature controllers, the controller powers the refrigeration system to aid in rapid temperature change over the bath's operating range. The compressor will not run with the setpoint above +45°C. The compressor runs continuously if the setpoint is +45°C or less (+35°C or less for 220v/50Hz units) while the heater cycles to maintain the setpoint. However, if the setpoint is more than 2°C higher than the fluid temperature, the compressor will shut off to provide rapid heat up.

If a rapid cool down at elevated temperatures is needed you will have to temporarily adjust the setpoint to below +45°C. The compressor will run to bring the temperature down. Reset the setpoint once cool down is achieved.

The HEAT LED indicates the status of the heater. As the temperature of the fluid in the bath approaches the temperature setpoint, the lamp will cycle on and off to indicate the approximate duty cycle of the heater.

When the unit is shut off (on units with Basic temperature controllers, when the refrigeration system is shut off), wait approximately five minutes before restarting. This allows time for the refrigeration pressures to equalize. If the pressures are not allowed to equalize, the compressor will short-cycle (clicking sound) and no cooling will occur.

Boost Heater

Model RTE-220, with an Analog, Basic, Digital or Programmable temperature controller, has an automatic boost heater. The boost heater is designed to provide additional heat to the unit's large work area to aid rapid heating. Whether the boost heater is on or off depends on the difference between the bath temperature and the setpoint.

If the bath temperature is within 2.5°C of the setpoint, the boost heater remains off. If the bath temperature is 2.5°C below the setpoint, the boost heater will come on.

Basic

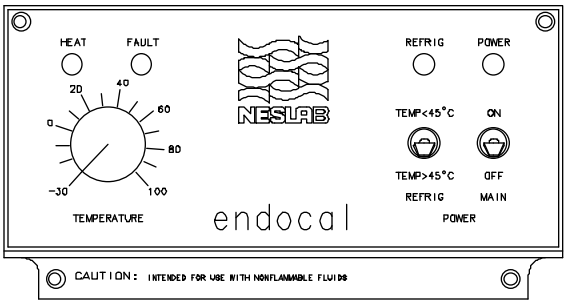

Basic Temperature Controller (Front View)

Start Up
Before starting the unit, check all electrical and plumbing connections and make sure the work area has been properly filled with bath fluid.

To start the unit, place the MAIN ON/OFF switch in the ON position. The pump will start and the POWER LED will light.

Temperature Adjustment
To adjust the bath temperature, turn the calibrated TEMPERATURE dial and position the reference line as close to the temperature setpoint as possible.

Analog

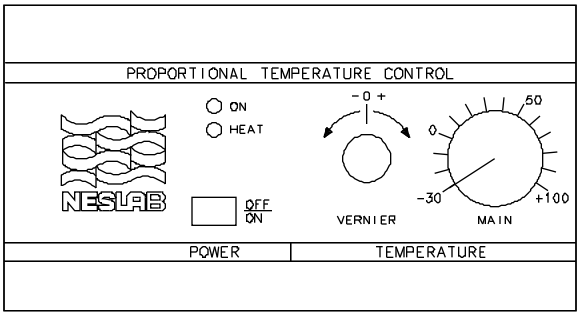

Analog Temperature Controller (Front View)

Start Up
Before starting the unit, check all electrical and plumbing connections and make sure the work area has been properly filled with bath fluid.

To start the unit, press the ON/OFF switch. The pump and refrigeration system will start and the ON LED will light.

Temperature Adjustment
To adjust the bath temperature, turn the calibrated MAIN dial and position the reference line as close to the temperature setpoint as possible. Use the VERNIER dial and the bath thermometer to make fine adjustments to the bath temperature.

Digital

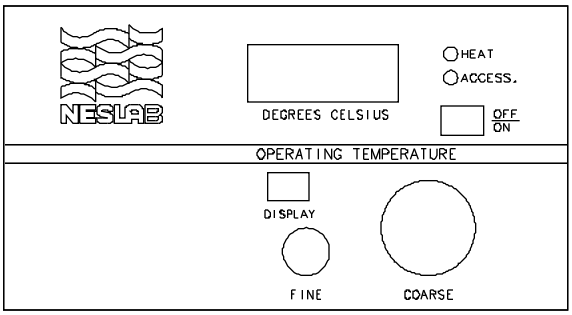

Digital Temperature Controller (Front View)

Start Up

Before starting the unit, check all electrical and plumbing connections and make sure the work area has been properly filled with bath fluid.

To start the unit, press the ON/OFF switch. The pump and refrigeration system will start and the digital display will indicate the temperature of the fluid in the bath.

Temperature Adjustment

To display the temperature setpoint, press the DISPLAY switch. To adjust the setpoint, press the DISPLAY switch and turn the COARSE and FINE dials until the temperature setpoint is indicated on the LED display.

Inadvertent movement of the COARSE and FINE dials, regardless of the position of the DISPLAY switch, will result in a change of the setpoint. The change will not be immediately reflected on the LED display unless the DISPLAY switch is pressed. The display will eventually change as the unit responds to the new setpoint.

Programmable

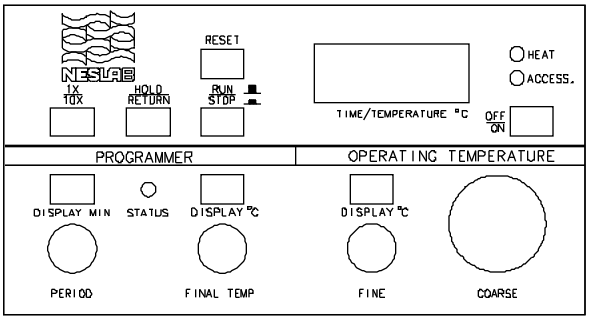

Programmable Temperature Controller (Front View)

Start Up

Before starting the unit, check all electrical and plumbing connections and make sure the work area has been properly filled with bath fluid.

To start the unit, push the ON/OFF switch. The pump and refrigeration system will start and the digital display will indicate the temperature of the fluid in the bath.

Temperature Adjustment

To display the temperature setpoint, press the DISPLAY°C switch (on the OPERATING TEMPERATURE section). To adjust the setpoint, press the DISPLAY°C switch and turn the COARSE and FINE dials until the temperature setpoint is indicated on the LED display.

Inadvertent movement of the COARSE and FINE dials, regardless of the position of the DISPLAY switch, will result in a change of the setpoint. The change will not be immediately reflected on the LED display unless the DISPLAY switch is pressed. The display will eventually change as the unit responds to the new setpoint.

Programming

DISPLAY°C

When pressed, the temperature setpoint is indicated on the LED display. When released, the display indicates the temperature of the fluid in the bath.

FINAL TEMP

Adjusts final temperature setpoint .

DISPLAY MIN

When pressed, the time span of the program is indicated, in minutes, on the LED display. When released the display indicates the temperature of the fluid in the bath.

PERIOD
Adjusts time span of the program, in minutes.

STATUS
Indicates status of program clock.

If the light is off, the clock is stopped.

If the light flashes rapidly, the program clock is running.

If the light flashes slowly, power to the clock has been turned off or interrupted since the clock was last reset.

RUN/STOP
Starts and stops program execution.

In the RUN position, the program clock runs and the temperature setpoint changes linearly from the current fluid temperature to final temperature. In the STOP position, the program clock stops and the fluid temperature will remain at the current temperature. Returning to the RUN position resumes the program.

RESET
Resets the program clock and returns the fluid temperature to the starting temperature.

1X/10X
Adjusts PERIOD time range: 1X = 5 minutes to 180 minutes; 10X = 50 minutes to 1800 minutes.

HOLD/RETURN
Determines what will happen at the end of the program.

In the HOLD position, the setpoint will remain at the final temperature when the program is completed. In the RETURN position, the setpoint will return to the starting setpoint when the program is completed. The setpoint will change abruptly, but the fluid temperature will respond as quickly as the systems heating and cooling capacity allows.

Mock Program

This mock program is designed to illustrate the relationship between specific

key functions, previously outlined, to an overall temperature program. This simple linear ramp will raise the bath temperature from 0°C to +50°C in a time span of 2.5 hours.

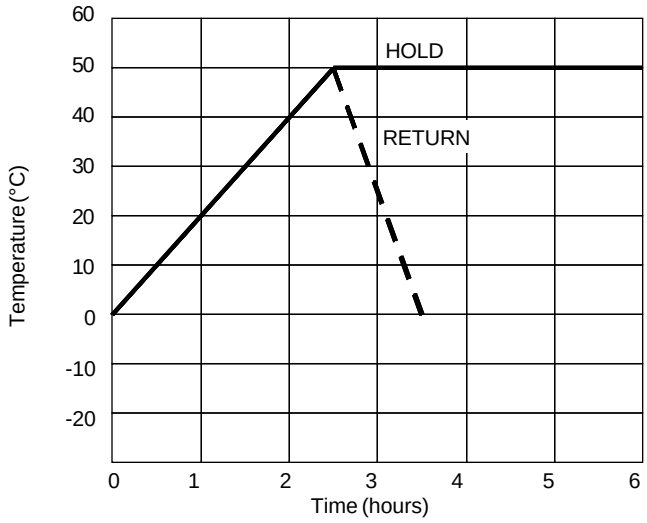

Start the unit and reset the programmer clock.

Start the unit by pressing the ON/OFF switch. The pump and refrigeration system will start and the digital display will indicate the temperature of the fluid in the bath.

To reset the program clock, place the RUN/STOP switch in the STOP position and press the RESET switch. The STATUS LED will go out, indicating the programmer is ready to accept a program.

Set starting temperature at 0°C.

Press the DISPLAY°C (under OPERATING TEMPERATURE section) and adjust the temperature setpoint for 0°C. (See Temperature Adjustment for more detailed instructions.) While the fluid temperature is stabilizing, set the remaining parameters of the program.

Set final temperature at +50°C.

Press the DISPLAY°C (under PROGRAMMER section) and turn the FINAL TEMP dial until the final temperature, +50°C, is indicated on the LED display.

Set time span.

All time parameters associated with the programmer are interpreted in minutes. The time span of 2.5 hours translates to 150 minutes. Place the 1X/10X switch in the 1X position. Press DISPLAY MIN and turn the PERIOD dial until the time span, 150 minutes, is indicated to the LED display.

Set end function.
To hold the fluid temperature at the final setpoint, place the HOLD/RETURN switch in the HOLD position.

Run
The program is ready to run once all parameters have been set and the bath temperature has stabilized at 0°C.

To start the program, place the RUN/STOP switch in the RUN position. The STATUS LED will flash rapidly, indicating the program is executed.

Programming Notes
The unit's limitations must be considered when designing programs. Temperature or time parameters which exceed the performance capabilities of the bath will result in unsatisfactory operation.

The Programmable controller can function as a Digital controller by disengaging the program clock. When the unit is turned on, the STATUS LED will flash slowly indicating the controller has received power. Place the RUN/STOP switch in the STOP position and momentarily press RESET. The program clock will reset and the STATUS LED will go out. The controller will now function as a Digital controller provided the RUN/STOP switch remains in the STOP position.

Section V Special Features

High Temperature/ Low Liquid Level Safety

The adjustable High Temperature/Low Liquid Level Safety (HIGH TEMP/ LOW LEVEL) prevents the heater from reaching excessively high temperatures that can cause serious damage to your unit. A single temperature sensor, located on the heater coils in the bath, monitors both conditions. A High Temperature/Low Liquid Level fault occurs when the temperature of the sensor exceeds the set temperature limit. In the event of a fault, the unit will shut down. The cause of the fault must be identified and corrected before the unit can be restarted.

The safety is not pre-set and must be adjusted during initial installation.

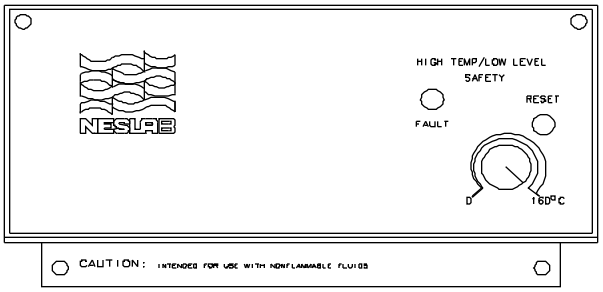

Pump Box (Front View)

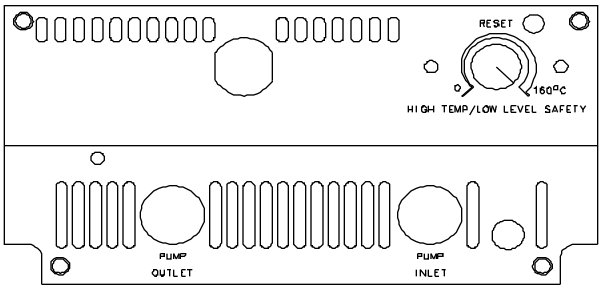

Basic Temperature Controller (Rear View)

To set the safety, locate the HIGH TEMP/LOW LEVEL SAFETY adjustment dial on the front of the pump box (on units with Basic temperature controllers, the dial is located on the rear of the pump box). Turn the dial fully clockwise and press the RESET switch.

Start the unit. Adjust the temperature setpoint for a few degrees higher than the highest desired fluid temperature and allow the bath to stabilize at the temperature setpoint. Turn the HIGH TEMP/LOW LEVEL SAFETY dial counter-clockwise until you hear a click and the unit shuts down. The red FAULT LED on the pump box will light to indicate a fault has occurred.

The safety is now set. Allow the fluid temperature to cool below the cutout temperature, then press the RESET switch.

If a fault ever occurs, RESET must be pressed before the unit will start.

Accessory Receptacle

All Digital and Programmable temperature controllers are equipped with a 15 pin “D” sub-miniature female receptacle on the rear of the control box. The receptacle allows the bath to be monitored and controlled from a remote location. To activate the receptacle, press the two position ENABLE/ DISABLE switch next to the receptacle. The yellow ACCESS LED on the front of the control box will light when the receptacle is enabled. When the receptacle is not being used, the switch must be in the DISABLE position.

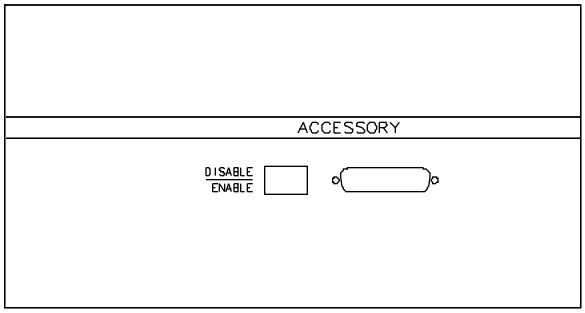

Digital/Programmable Temperature Controller (Rear View)

LINE VOLTAGE SHOULD NEVER BE APPLIED TO THE PINS IN THIS RECEPTACLE. ADDITIONALLY, NO VOLTAGE EXCEEDING 5VDC (EXCEPT WHERE NOTED) SHOULD BE APPLIED. NEVER APPLY VOLTAGE TO THE GROUND PINS.

The pins can function as an input, output, or both input and output.

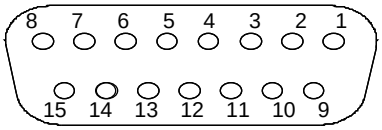

Accessory Receptacle Pin Designations

Pin #	Function	Description
1		Chassis ground
2	Output: Compressor status	A high level on this pin, approximately +4VDC, indicates the compressor is running. A low level, approximately 0VDC, indicates the compressor is off. An LED connected between this pin and pin 9 will indicate the compressor status. This pin can be connected to multiple switching devices or one 3-32V solid state relay.
	Input: Compressor Off	When this pin is connected to pin 9, the compressor will shut off.
3	Output: Span + (Programmable Temperature Controllers Only)	Indicates the maximum setpoint value the unit can be set to operate. The temperature scale is 10mV/°C, referenced to analog ground, pin 6 (example: +1350mV = +135°C). Output resistance of 2.7K Ω.
	Input: STOP (Programmable Temperature Controllers Only)	Connect this pin to a voltage source between -5VDC and -20VDC to place the programmer in the STOP mode. Pin 13 (referenced to power ground, pin 9) can be used as a voltage source.
4	Output: Span - (Programmable Temperature Controllers Only)	Indicates the minimum setpoint value the unit can operate. The temperature scale is 10mV/°C, referenced to analog ground, pin 6 (example: -150mV = -15°C). Output resistance of 2.7K Ω.
	Input: RESET (Programmable Temperature Controllers Only)	Connect this pin to a voltage source adjusted between +3.5VDC and +20VDC to reset the programmer. Pin 14 (referenced to power ground, pin 9) can be used as a voltage source.
5	Output: Program Status (Programmable Temperature Controllers Only)	The voltage value on this pin indicates one of three conditions: 1. When the voltage value is approximately +3.5VDC, the programmer has completed the program. 2. When the voltage value is approximately 0VDC, the programmer clock has been stopped. The programmer is in the STOP mode. 3. When the voltage value is approximately -5VDC, the programmer clock is running.
6	Analog ground	Analog ground is grounded internally and should not be grounded anywhere else. Analog ground represents reference “0”. This pin should be used only as a reference pin when no current is flowing. See pin 9.

Pin #	Function	Description
7	Output: Sensor temperature	The fluid temperature, as measured by the controller's temperature sensor located in the bath, can be read at this pin. The temperature is scale 10mV/°C, referenced to analog ground, pin 6 (example: +150mV = +15°C). Output resistance of 2.7K Ω.
8	Output: Temperature setpoint	The present temperature setpoint can be read at this pin. The temperature scale is 10mV/°C, referenced to analog ground, pin 6 (example: +150mV = +15°C). Output resistance of 600 Ω.
9	Power ground	Power ground is connected to chassis ground internally. This pin should be used for functions that require the unit to draw input or output current. See pin 6.
10	Output: Boost heater status	A high level on this pin, approximately +4VDC, indicates the boost heater is on. A low level, approximately 0VDC, indicates the boost heater is off. An LED connected between this pin and pin 9 will indicate the boost heater status. This pin can be connected to multiple switching devices or one 3-32V solid state relay.
	Input: Boost Heater Off	Connect this pin to pin 9, power ground, and the boost heater will shut off.
11	Output: Band detector	A negative voltage, approximately -5VDC, on this pin indicates the controller is operating within the proportional band. A positive voltage, approximately +5VDC, indicates the present bath temperature is outside of the controller's proportional band. Measurements are referenced to power ground, pin 9. Output resistance of 1.8K Ω.
12	Input: Digital Display	An external voltage can be displayed on the controller's digital display by applying the voltage to this pin. This pin is reserved for use with NESLAB electronic accessories. Contact our Sales Department for more information.
13	Output: -5V	Power supply of -5VDC. Damage will occur if this pin is connected to pin 14.
14	Output: +5V	Power supply of +5VDC. Damage will occur if this pin is connected to pin 13.
15	Input: Temperature setpoint	An external input can provide a temperature setpoint for the controller by applying a known voltage to this pin. The temperature scale is 10mV/°C, referenced to analog ground, pin 6 (example:+230mV = +23°C). The ACCESSORY ENABLE/DISABLE switch must be in the ENABLE position to control the setpoint from this pin.

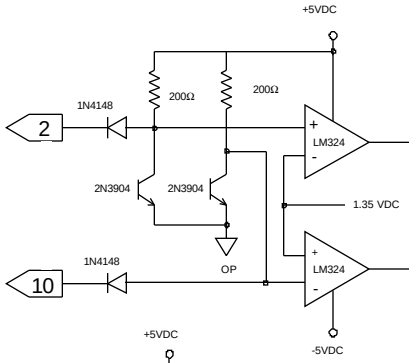
+5VDC
200Ω
200Ω
1N4148
2
LM324
2N3904
2N3904
1.35 VDC
OP
1N4148
10
LM324
-5VDC

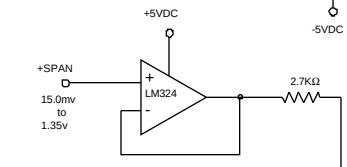
+5VDC
+SPAN
15.0mv
to
1.35v
LM324
2.7KΩ

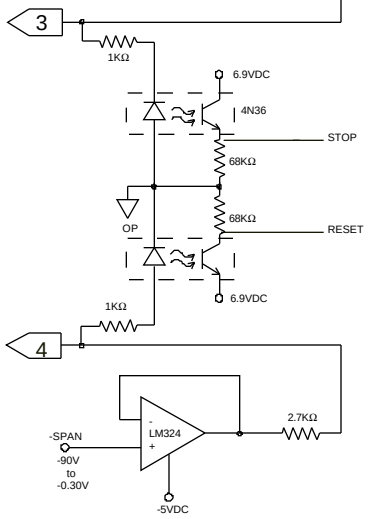
3
1KΩ
6.9VDC
4N36
STOP
68KΩ
OP
68KΩ
RESET
6.9VDC
1KΩ
4
-SPAN
-90V
to
-0.30V
LM324
2.7KΩ
-5VDC

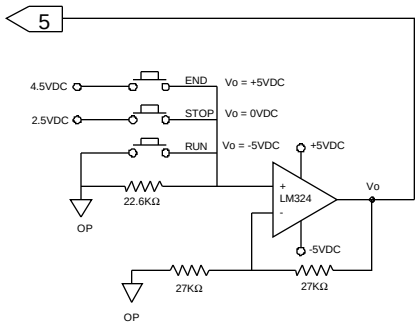
5
4.5VDC
END
Vo = +5VDC
2.5VDC
STOP
Vo = 0VDC
RUN
Vo = -5VDC
+5VDC
22.6KΩ
LM324
Vo
OP
-5VDC
27KΩ
27KΩ
OP


1
CHASSIS GROUND

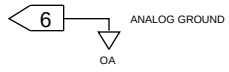
6
ANALOG GROUND
OA

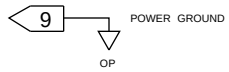
9
POWER GROUND
OP

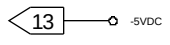
13
-5VDC

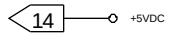
14
+5VDC

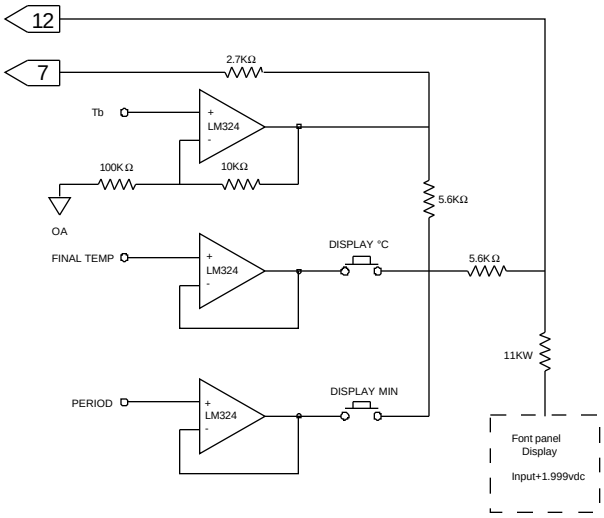
12
7
2.7KΩ
Tb
LM324
100K Ω
10KΩ
5.6KΩ
OA
FINAL TEMP
LM324
DISPLAY °C
5.6K Ω
11KW
PERIOD
LM324
DISPLAY MIN
Font panel
Display
Input+1.999vdc

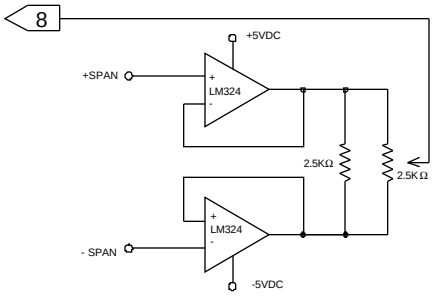
8
+5VDC
+SPAN
LM324
2.5KΩ
2.5K Ω
LM324
- SPAN
-5VDC

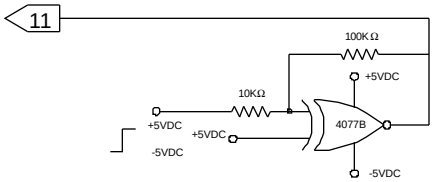
11
100K Ω
+5VDC
10KΩ
+5VDC
+5VDC
4077B
-5VDC
-5VDC

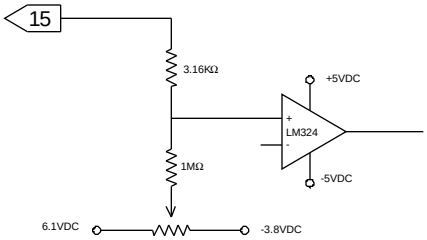
15
3.16KΩ
+5VDC
LM324
1MΩ
-5VDC
6.1VDC
-3.8VDC

Section VI Maintenance

Service Contracts

NESLAB offers on-site Service Contracts that are designed to provide extended life and minimal down-time for your unit. For more information, contact our Service Department (see Preface, After-sale Support).

Condenser

For proper operation, the unit needs to pull substantial amounts of air through a condenser. A build up of dust or debris on the fins of the condenser will lead to a loss of cooling capacity.

Periodic vacuuming of the condenser is necessary. The frequency of cleaning depends on the operating environment. After initial installation, we recommend the front panel be removed and a visual inspection of the condenser made monthly. After several months, the frequency of cleaning will be established.



The unit must be turned off before the front panel is removed.

Algae

To restrict the growth of algae in the bath, we recommend the bath cover be kept in place and that all circulation lines be opaque. This will eliminate the entrance of light required for the growth of most common algae.

If algae becomes a problem, contact our Service Department for a recommendation (see Preface, After-sale Support).

Section VII Troubleshooting

Checklist

Unit will not start

Make sure the voltage of the power source meets the specified voltage, ±10%. Refer to the serial number label on the rear of the unit to identify the specific electrical requirements of your unit.

Units with an Analog, Digital, or Programmable controller: make sure the controller is properly connected to the pump box.

Check the High Temperature/Low Liquid Level Safety. If the FAULT light is on, make sure the fluid level in the bath is between the marks in the baffle and the HIGH TEMP/LOW LEVEL SAFETY setting is greater than the fluid temperature. Push the RESET switch and attempt to restart.

Loss of cooling capacity
Be sure the cooling capacity of the unit has not been exceeded if circulating to an external system.

When the unit is shut off, wait approximately five minutes before restarting. This allows time for the refrigeration pressures to equalize. If the pressures are not allowed to equalize, the compressor will short-cycle (clicking sound) and no cooling will occur.

Proper ventilation is required for heat removal. Make sure ventilation through the front and rear panels is not impeded and the panels are free of dust and debris.

Ice build up on the cooling coils can act as insulation and lower the cooling capacity. Raise the temperature of the bath to de-ice the cooling coil and increase the concentration of non-freezing fluid.

No temperature control
Units with a Digital or Programmable controller: the ENABLE/DISABLE switch on the rear of the controller must be in the correct position. If the ACCESSORY receptacle is being used, the switch must be in the ENABLE position. If not in use, the switch must be in the DISABLE position. The ACCESS light on the front of the unit indicates the status of this switch.

No external circulation
Make sure the stainless steel disks on the PUMP INLET and PUMP OUTLET have been removed.

Check for obstructions, kinks, or leaks in the circulation tubing.

Circulation will cease when the pump head has been exceeded.

Service Assistance

If, after following these troubleshooting steps, your unit fails to operate properly, contact our Service Department for assistance (see Preface, After-sale Support). Before calling, please obtain the following information:

Part number
Serial number
Voltage of unit
Voltage of power source

Technical Support

Our Service Department can provide you with a wiring diagram and a complete list of spare parts for your unit. Before calling, please obtain the following information:

Part number
Serial number

Section VIII Warranty

NESLAB Instruments, Inc. warrants for one (1) year from date of shipment any NESLAB unit according to the following terms.

Any part of the unit manufactured or supplied by NESLAB and found in the reasonable judgement of NESLAB to be defective in material or workmanship will be repaired by an authorized NESLAB Service Center without charge for parts or labor. The unit including any defective part must be returned to an authorized NESLAB Service Center within the warranty period. The expense of returning the unit to the authorized NESLAB Service Center for warranty service will be paid for by the buyer. NESLAB's responsibility in respect to warranty claims is limited to making the required repairs or replacements, and no claim of breach of warranty shall be cause for cancellation or rescission of the contract of sale of any unit.

This warranty does not cover any unit that has been subject to misuse, neglect, or accident. The warranty does not apply to any damage to the unit that is the result of improper installation or maintenance, or to any unit that has been operated or maintained in any way contrary to the operating or maintenance instructions as specified in NESLAB's Instruction and Operation Manual. This warranty does not cover any unit that has been altered or modified so as to change its intended use.

In addition, the warranty does not extend to repairs made by the use of parts, accessories, or fluids which are either incompatible with the unit or adversely effect its operation, performance or durability.

NESLAB reserves the right to change or improve the design of any unit without assuming any obligation to modify any unit previously manufactured.

The foregoing express warranty is in lieu of all other warranties, expressed or implied, including warranties or merchantability and fitness for a particular purpose.

NESLAB's obligation under this warranty is strictly and exclusively limited to the repair or replacement of defective parts, and NESLAB does not assume or authorize anyone to assume for them any other obligation.

NESLAB assumes no responsibility for incidental, consequential, or other damages including, but not limited to loss or damage to property, loss of revenue, loss of use of the unit, loss of time, or convenience.

This warranty applies to units sold in the United States. Any units sold elsewhere are warranted by the affiliated marketing company of NESLAB Instruments, Inc. This warranty and all matters arising pursuant of it shall be governed by law of the State of New Hampshire, United States.

RTE Series
Refrigerated
Bath/Circulators
Digital Controller

NESLAB Manual P/N U00479
Rev. 09/22/99

Instruction and Operation Manual



RTE-Series Refrigerated Bath/Circulator

Table of Contents

PREFACE

Compliance 2
Unpacking 2
Warranty 2
After-sale Support 2

SECTION I
Safety

Warnings 3

SECTION II
General Information

Description 4
Specifications 4

SECTION III
Installation

Site 5
Electrical Requirements 5
Plumbing Requirements 6
Fluids 8
Filling Requirements 8
Water Quality Standards and Recommendations 9

SECTION IV
Temperature Controller

Start Up 10
Controller Keypad & Display 10
Changing a Value 11
Controller Displays 11
Operator's Loop 12
Setup Loop 13
Error Messages 15
Flow Control Valve (Optional) 15
Autorefill (Optional) 16
Sealable Bath Lid (Optional) 16
High Temperature/Low Liquid Level Safety 17
9-Pin Accessory Connectors 18
Analog Interface (Optional) 19

SECTION V
Maintenance

Service Contracts 20
Condenser 20
Reservoir Cleaning 21
Algae 21
Additional Loops 22
Calibration Loop 23
Calibration Procedure 23

SECTION VI
Troubleshooting

Checklist 25
Service Assistance and Technical Support 26

APPENDIX A **NESLAB SERIAL COMMUNICATION PROTOCOL**

APPENDIX B **PROGRAMMING SOFTWARE/RS232 COMMUNICATION**

WARRANTY

Preface

Compliance

Products tested and found to be in compliance with the requirements defined in the EMC standards defined by 89/336/EEC as well as Low Voltage Directive (LVD) 73/23/EEC can be identified by the CE label on the rear of the unit. The testing has demonstrated compliance with the following directives:

LVD, 73/23/EEC	Complies with UL 3101-1:93
EMC, 89/336/EEC	EN 55011, Class A Verification EN 50082-1:1992 IEC 1000-4-2:1995 IEC 1000-4-3:1994 IEC 1000-4-4:1995

For any additional information refer to the Letter of Compliance that shipped with the unit (Declaration of Conformity).

Unpacking

Retain all cartons and packing material until the unit is operated and found to be in good condition. If the unit shows external or internal damage, or does not operate properly, contact the transportation company and file a damage claim. Under ICC regulations, this is your responsibility.

Warranty

Units have a warranty against defective parts and workmanship for one year from date of shipment. See back page for more details.

After-sale Support

NESLAB is committed to customer service both during and after the sale. If you have questions concerning the operation of your unit, contact our Sales Department. If your unit fails to operate properly, or if you have questions concerning spare parts or Service Contracts, contact our Customer Service Department. Before calling, please obtain the following information from the unit's serial number label:

- *BOM number* _____
- *Serial number*_____

Section I Safety

Warnings

Make sure you read and understand all instructions and safety precautions listed in this manual before installing or operating your unit. If you have any questions concerning the operation of your unit or the information in this manual, contact our Sales Department.

Performance of installation, operation, or maintenance procedures other than those described in this manual may result in a hazardous situation and may void the manufacturer's warranty.

Transport the unit with care. Sudden jolts or drops can damage the refrigeration lines. The units weigh approximately: RTE-111, 86 pounds (390 kilograms); RTE-211, 99 pounds (45 kilograms); RTE-221, 106 pounds (48 kilograms). Units should be transported with equipment designed to lift these weights.

Observe all warning labels.

Never remove warning labels.

Never operate damaged or leaking equipment.

Never operate the unit without bath fluid in the bath.

Never use pure ethylene glycol as a bath fluid. Above 80°C the user is responsible for the fluid used.

For 220 - 240 volt units supplied without a line cord, use a harmonized (HAR) grounded 3-conductor cord, type H 0 5 V V - F , with conductors listed below. A suitable cord end is required for connecting to the equipment (see unit socket) and must terminate with an IEC approved plug for proper connection to power supply.

RTE-111 and RTE-211	Nominal 1.0 mm^2 cross section rated 10 Amps Unit Socket: IEC - 320 C13
RTE-221	Nominal 1.5 mm^2 cross section rated 16 Amps Unit Socket: IEC - 320 C19

Always turn off the unit and disconnect the line cord from the power source before performing any service or maintenance procedures, or before moving the unit.

Always empty the bath before moving the unit.

Never operate equipment with damaged line cords.

Refer service and repairs to a qualified technician.

In addition to the safety warnings listed above, warnings are posted throughout the manual. These warnings are designated by an exclamation mark inside an equilateral triangle with text highlighted in bold print. Read and follow these important instructions. Failure to observe these instructions can result in permanent damage to the unit, significant property damage, personal injury or death.

Section II General Information

Description

The RTE-Series Refrigerated Bath/Circulators are designed to provide temperature control for applications requiring a fluid work area or pumping to an external system.

Units consist of a non-CFC air-cooled refrigeration system, circulation pump, seamless stainless steel bath, work area cover, and a temperature controller.

Specifications

	RTE-111	RTE-211	RTE-221
Temperature Range[1]	-25°C to +150°C		-23°C to +150°C
Temperature Stability[2,3,4]	±0.01°C		
Cooling Capacity[2,5]			
Watts	500		
BTU/H	1705		
Pump Capacity[2]	15 lpm at 0' (0 M) 0 lpm at 16' (4.9 M)		
Heater (Watts)			
60 Hz Models	800	800	1600
50 Hz Models	1000	1000	1800
Refrigerant	R134a		
Bath Work Area			
(L x W x D)			
Inches	4 3/4 x 8 x 6	9 1/4 x 10 x 6	9 1/4 x 10 x 9
Centimeters	12.1 x 20.3 x 15.3	23.5 x 25.4 x 15.2	23.5 x 25.4 x 22.9
Bath Volume			
Gallons	1.9	3.2	5.4
Liters	7.0	12.1	20.5
Case Dimensions[6]			
Inches (H x W x D)	25 x 10 5/16 x 15 7/8	25 x 12 3/8 x 18 3/8	27 7/8 x 12 3/8 x 18 3/8
Centimeters (H x W x D)	63.5 x 26.2 x 40.3	63.5 x 31.4 x 46.7	70.8 x 31.4 x 46.7
Power Requirements[7]	115 V, 60 Hz 220V, 50 Hz		
Shipping Weight			
Pounds	86	99	106
Kilograms	39	45	48

1. Low-end temperature for 50Hz units is -18°C, -23°C and -21°C respectively.
2. Specifications listed for units operating to +5°C using water. Other specifications determined using fluid with specific heat of 0.6, ambient +20°C (+70°F).
3. For operation below 0°C, covering the bath work area may improve stability.
4. For some applications, agitation and stability above ambient may be improved by connecting a small length of hose between the pump connections on the rear of the unit.
5. 50 Hz RTE-111 units have a 375 watt cooling capacity.
6. Add 1½ inches (3.8 cm) to depth for plumbing fittings.
7. Control transformer fusing - 115VAC units = (T=Time Delay) 500mA 250V 5 x 20mm (Qty 1), 220VAC units =[T=Time Delay] 250mA 250V to 5 x 20mm (Qty 2).
   Bussman fusing part numbers: 500mA fuse = Bussman S504-500mA
   250mA fuse = Bussman S504-250mA

Section III Installation

Site

The indentations on the unit's sides are designed to function as handles. Lift the unit by the handles and locate it on a sturdy work area. Ambient temperatures should be inside the range of +50°F to +104°F (+10°C to +40°C).



Never place the unit in a location where excessive heat, moisture, or corrosive materials are present.

The unit has an air-cooled refrigeration system. Air is drawn through the front panel and discharged through the rear panel. The unit must be positioned so the air intake and discharge are not impeded. A minimum clearance of 12 inches (30 centimeters) at the front and rear of the unit is necessary for adequate ventilation. Inadequate ventilation will reduce cooling capacity and, in extreme cases, can cause compressor failure.

Excessively dusty areas should be avoided and a periodic cleaning schedule should be instituted (see Section VI, Cleaning).

The unit will retain its full rated capacity in ambient temperatures up to approximately +75°F (+24°C). Above +75°F, reduce the cooling capacity 1% for every 1°F above +75°F, to a maximum ambient temperature of +104°F. In terms of Celsius, reduce the cooling capacity 1% for every 0.5°C above +24°C, to a maximum ambient temperature of +40°C.

Electrical Requirements



Line voltage may be easily accessible inside the pump/control box. Always unplug the unit prior to removing pump/control box cover.

Refer to the serial number label on the rear of the unit to identify the specific electrical requirements of your unit.

Ensure the voltage of the power source meets the specified voltage, ±10%.

The unit construction provides extra protection against the risk of electric shock by grounding appropriate metal parts. The extra protection may not function unless the power cord is connected to a properly grounded outlet. It is the user's responsibility to assure a proper ground connection is provided.



For 220 - 240 volt units supplied without a line cord, use a harmonized (HAR) grounded 3-conductor cord, type H 0 5 V V - F , with conductors listed below. A suitable cord end is required for connecting to the equipment (see unit socket) and must terminate with an IEC approved plug for proper connection to power supply.

RTE-221	**Nominal 1.5 mm² cross section rated 16 Amps**
	Unit Socket: IEC - 320 C19
RTE-111 and RTE-211	**Nominal 1.0 mm² cross section rated 10 Amps**
	Unit Socket: IEC - 320 C13

Plumbing Requirements



Ensure the unit is off before connecting tubing to the unit.

To prevent damage to the plumbing lines, always support the ¾" fittings while installing/removing the pumping caps and lines.

Hose Connections

The pump connections are located at the rear of the pump box and are labelled PUMP INLET and PUMP OUTLET. These connections are bent upward so the recirculating fluid will drain back into the reservoir when the hoses are disconnected. Both connections are capped with stainless steel serrated plugs.

The pump lines have ¼" MPT for mating with standard plumbing fittings. For your convenience stainless steel adapters, ¼" FPT to ⅜" O.D. serrated fitting, are provided. (To assure proper fit, they should be installed using 1½ turns of Teflon® tape around the threads.)

Flexible tubing, if used, should be of heavy wall or reinforced construction. Make sure all tubing connections are securely clamped. Avoid running tubing near radiators, hot water pipes, etc. If substantial lengths of tubing are necessary, insulation may be required to prevent loss of cooling capacity. Tubing and insulation are available from NESLAB. Contact our Sales Department for more information (see Preface, After-sale Support).

It is important to keep the distance between the unit and the external system as short as possible, and to use the largest diameter tubing practical. Tubing should be straight and without bends. If diameter reductions must be made, make them at the inlet and outlet of the external system, not at the unit.

If substantial lengths of cooling lines are required, they should be pre-filled with bath fluid before connecting them to the unit. This will ensure that an adequate amount of fluid will be in the bath once it is in operation.

Pumping

The pump is designed to deliver a flow of 15 liters per minute (4 gallons per minute) at 0 feet head. To prevent external circulation, the PUMP INLET and PUMP OUTLET lines on the rear of the unit are capped. The caps must be removed when external circulation is required.

To properly secure external hose connections to the unit, wrap Teflon® tape around the pipe line threads before installation. Once the hose connections are made, the hoses must be properly plumbed to an external system. *It is important the bath is not in operation until all plumbing is complete.*

NOTE: To increase agitation in the bath when not circulating externally, connect a short loop of hose between the inlet and outlet lines.

If the bath is not used for external circulation or increased agitation, make sure the stainless steel caps are in place prior to operating the bath.

Circulating to an open container

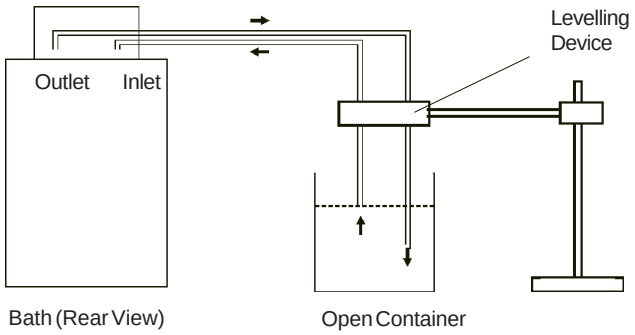

A stainless steel leveling device is available to aid circulation to an open vessel. Contact our Sales Department for more information (see Preface).

Support the leveling device over the open container with a ringstand. Stagger the tubes in the leveling device so one tube is submerged in the vessel fluid, and the other tube is level with the fluid surface. Connect the deeper tube to the PUMP OUTLET and the shorter tube to the PUMP INLET.

Adjust the flow rate using the accessory flow control valve connected to the PUMP OUTLET, or by partially restricting the outlet tubing. When properly adjusted, the pump inlet will draw an occasional air bubble to prevent over flow, and the pump outlet will force fluid through the submerged tube to prevent aeration of the vessel.

To avoid siphoning the bath work area when the unit is shut off, lift the leveling device out of the vessel and above the level of the unit.

Circulating through two closed-loops

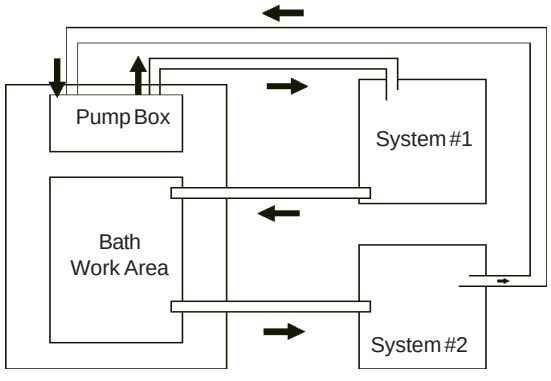

The pump can be used to circulate through two closed-loop systems. Connect the shortest practical length of flexible tubing from the PUMP OUTLET to the inlet of external system #1. Connect the outlet of system #1 directly into the bath work area. Connect tubing from the bath work area to the inlet of system #2. Connect the outlet of system #2 to the PUMP INLET.

Drain



Ensure the temperature of the bath fluid is safe before draining the unit.

The unit is equipped with a drain located at the back of the unit at the base of the bath. The drain has ¼" MPT and is capped with a stainless steel plug. To drain the reservoir simply remove the cap.

To assure proper fit when replacing the cap, be sure to line the threads with 1½ turns of Teflon® tape.

Fluids



Never use flammable or corrosive fluids with this unit.

The selected fluid must have a viscosity of 50 centistokes or less at the lowest operating temperature.

Filtered tap water is the recommended fluid for operation from +8°C to +80°C. See Water Quality Standards and Recommendation on the next page.

For operation from -30°C to +8°C, a 50/50 mixture, by volume, of tap water and laboratory grade ethylene glycol is suggested.



Never use pure ethylene glycol as a bath fluid. Above 80°C and below -30°C, the user is responsible for the fluid used.

Filling Requirements

The bath work area has a high and low level marker to guide filling. The markers are 1 inch horizontal slits located in the center of the stainless steel baffle separating the work area and the pump assembly. The correct fluid level falls between these two markers. The heating and cooling coils will be exposed and may become damaged if the correct fluid level is not provided.

When pumping to an external system, keep extra fluid on hand to maintain the proper level in both the circulating lines and the external system.



Never run the unit when the work area is empty. Avoid overfilling. Overfilling the bath may damage the insulation and affects stability as well as low-end performance.

Water Quality Standards and Recommendations

	Permissible (PPM)	Desirable (PPM)
Microbiologicals		
(algae, bacteria, fungi)	0	0
Inorganic Chemicals		
Calcium	<40	0.6
Chloride	250	<25
Copper	1.3	1.0
Iron	0.3	<0.1
Lead	0.015	0
Magnesium	<12	0.1
Manganese	0.05	<0.03
Nitrates\Nitrites	10 as N	0
Potassium	<20	0.3
Silicate	25	<1.0
Sodium	<20	0.3
Sulfate	250	<50
Hardness	17	<0.05
Total Dissolved Solids	50	10
Other Parameters		
pH	6.5-8.5	7-8
Resistivity	0.01*	0.05-0.1*

* Megohm-Cm (Compensated to 25°C)

Unfavorably high total ionized solids (TIS) can accelerate the rate of galvanic corrosion. These contaminants can function as electrolytes which increase the potential for galvanic cell corrosion and lead to localized corrosion such as pitting which can be observed at the studs and on the outside surface of cooling coils. Eventually, the pitting will become so extensive that the coil will leak refrigerant into the water reservoir.

For example, raw water in the U.S. averages 171 ppm (of NaCl). The recommended level for use in a water system is between 0.5 to 5.0 ppm (of NaCl).

Recommendation: Initially fill the tank with distilled/deionized water. Do not use untreated tap water, as the total ionized solids level may be too high.

Maintain this water quality at a resistivity of between 1 to 10 megohm-cm (compensated to 25°C) by using a purification system. Although the initial fill may be as high as 10 megohm-cm (compensated to 25°C), the desired level for long time usage is 1 to 3 megohm-cm (compensated to 25°C).

The above two recommendations will reduce the electrolytic potential of the water and prevent or reduce the galvanic corrosion observed.

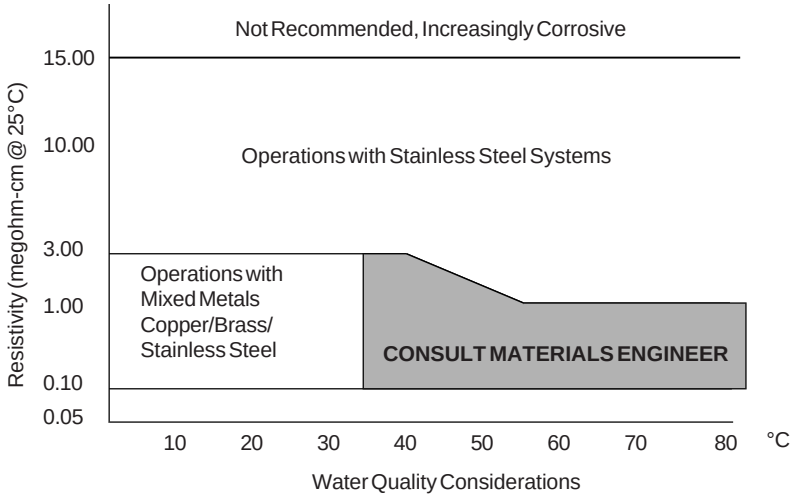

Section IV Temperature Controller

Start Up

Before starting the unit, check all electrical and plumbing connections and make sure the work area has been properly filled with bath fluid.

To start the bath, place the I/O circuit breaker on the side of the control box to the **I** (power on) position. The pump will start and the controller will display the temperature of the fluid in the reservoir.

The digital controller controls temperature using a PID (Proportional-Integral-Derivative) algorithm. It is designed with self-diagnostic features and easy to use operator interface.

Controller Keypad & Display

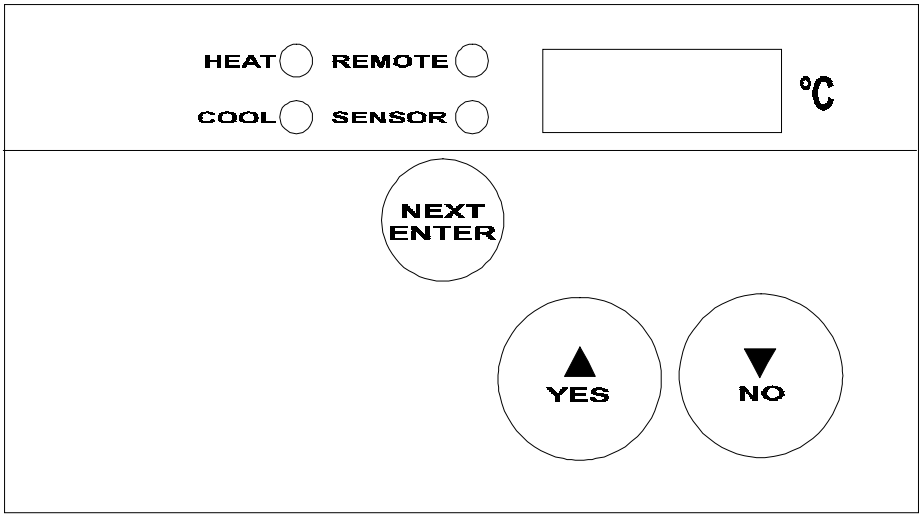

The controller's HEAT and COOL indicators show the status of the refrigeration system and heater. The HEAT indicator is lit when the heater is on. The HEAT indicator flashes when the heater is pulsating. The COOL indicator is lit when the refrigeration system is removing heat from the cooling fluid. A balance between COOL and HEAT controls the temperature.

NOTE: Below 50°C the refrigeration system is on unless the setpoint is more than 2°C above the bath temperature. This allows for rapid heat up. Above 50°C the refrigeration system is off unless the setpoint is more than 2°C below the bath temperature. This allows for rapid cool down.

The REMOTE indicator illuminates whenever the unit is configured to accept a remote setpoint. The controller's SENSOR indicator illuminates whenever the optional external sensor is selected. See Controller Displays on the next page for information on the °C display.

NEXT ENTER
Use this key to scroll forward through the menus and also to accept and save changes.

YES, ▲
This dual purpose key is used to answer Yes to Y/N questions or to increment numerical values upward for setting numeric values.

NO, ▼
This dual purpose key is used to answer No to Y/N questions or to decrement numerical values downward for setting numeric values.

Changing a Value

The **YES** key increments the value. The **NO** key decrements the value.

The display will flash as soon as either key is depressed, and will continue to flash until the **NEXT ENTER** key is pressed twice to accept the new value.

The new value will not be used by the controller until the **NEXT ENTER** key is depressed twice and the display stops flashing.

NOTE: If the **ENTER** key is not depressed twice within 10 seconds, the controller will time out and the new value will not be accepted. The controller will revert to the previous setpoint value.

The controller will not allow you to enter a value above the maximum or below the minimum (normally +150°C and -25°C).

Controller Displays

An alphanumeric display presents numeric readings of various operating conditions within the bath. Display function is selected by pressing the appropriate keys to move through a menu of available information.

When the controller is first powered up it performs a quick self-test then enters the Operator's Loop. The Operator's Loop displays the bath temperature and is used to change the setpoint, see page 12. The Setup Loop can be accessed from the Operator's Loop by pressing and holding the key combinations shown on Figure 1 on the next page. The Setup Loop is used to adjust the controller's PID parameters, select either the internal or optional external sensor, and set the high/low temperature limits. It is also used to select RS232 parameters and display the unit's identification number. See pages 13-14.

Operator's Loop

When the controller is first powered up it enters the Operator's Loop, displaying reservoir fluid temperature. Press the NEXT ENTER key to view the setpoint.

SP displays the controller setpoint. The display will flash between SP and the actual setpoint number. Use the YES/NO keys to change the setpoint value. Once the desired setpoint is displayed, press the NEXT ENTER key twice.

NOTE: If the bath is controlled via RS232 communications, the setpoint can not be changed from the keypad.

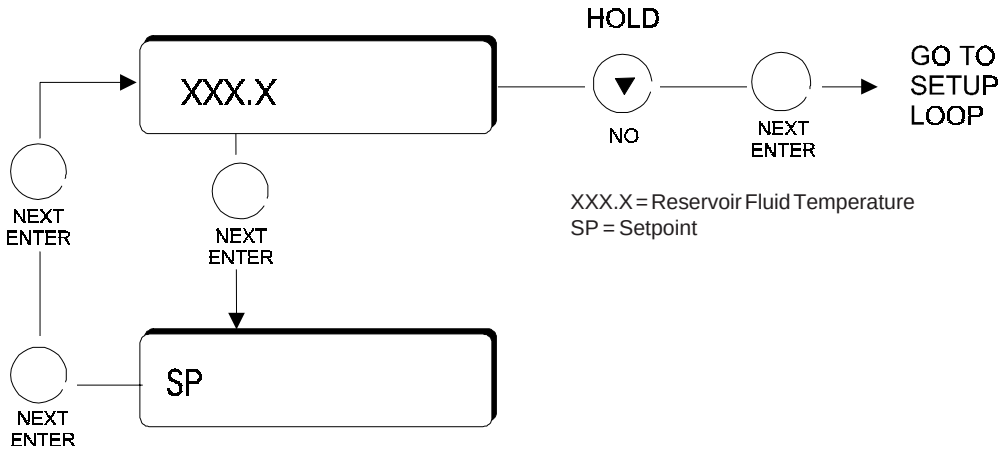

Figure 1 Operator's Loop

Setup Loop

The Setup Loop is used to adjust the controller's PID parameters; select either the internal (1) or optional external (2) sensor; set the high/low temperature limits; adjust RS232 parameters; and display/alter the unit's ID number.

Enter the Setup Loop from the Operator's Loop by pressing and holding the NO key, then press the NEXT ENTER key. Use the YES/NO keys to adjust the values. Press the NEXT ENTER key twice to accept the new value. Press the NEXT ENTER key only once if the value did not change.

While in the Setup Loop, if a key is not pressed during a one-minute time span, the controller will automatically return to the Operator's Loop.

NOTE: If the unit exceeds either temperature limit, the appropriate error message will flash, see page 15. The unit will not shut down (unless the temperature also exceeds the high temperature safety setting, see page 17).You will also receive an error code if the optional external sensor is selected but it is not installed.

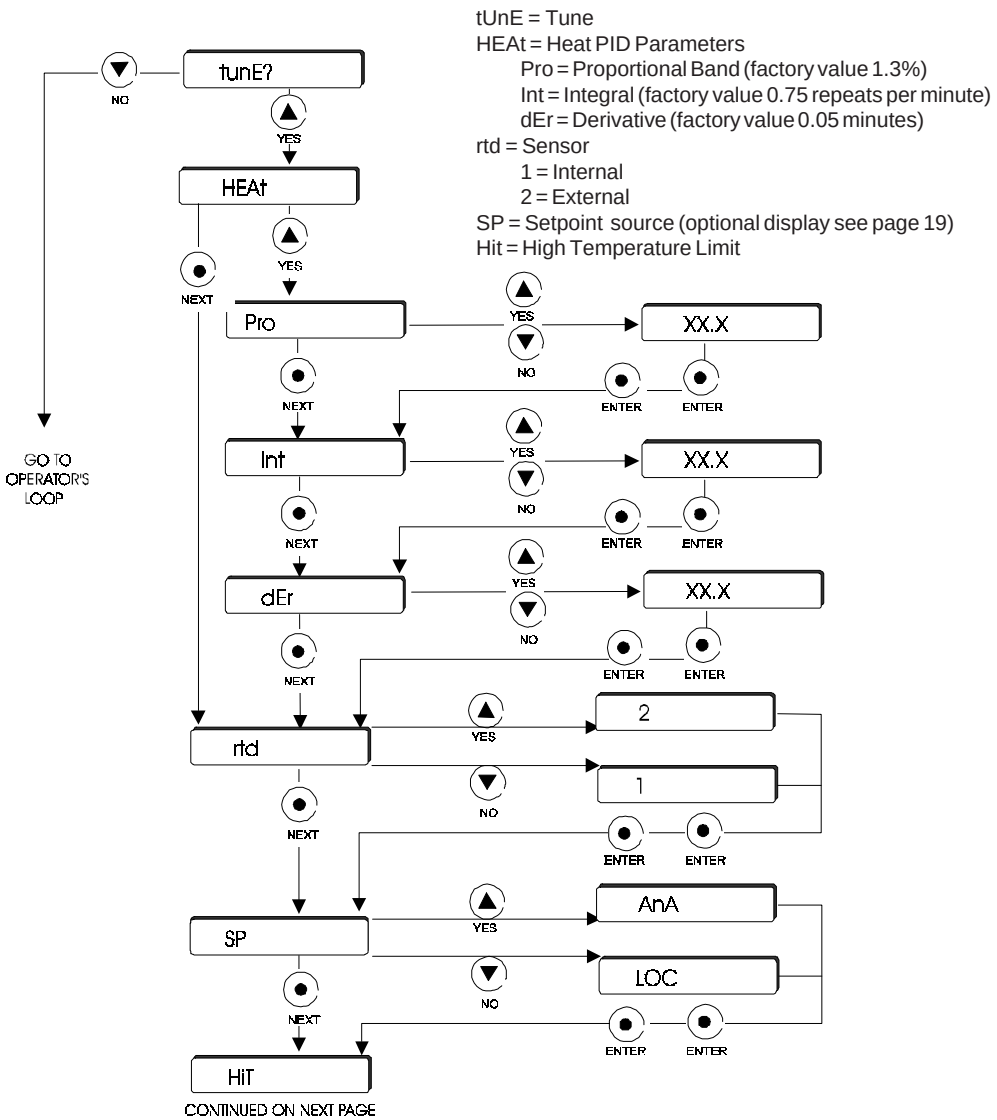

Figure 2 Setup Loop (1 of 2)

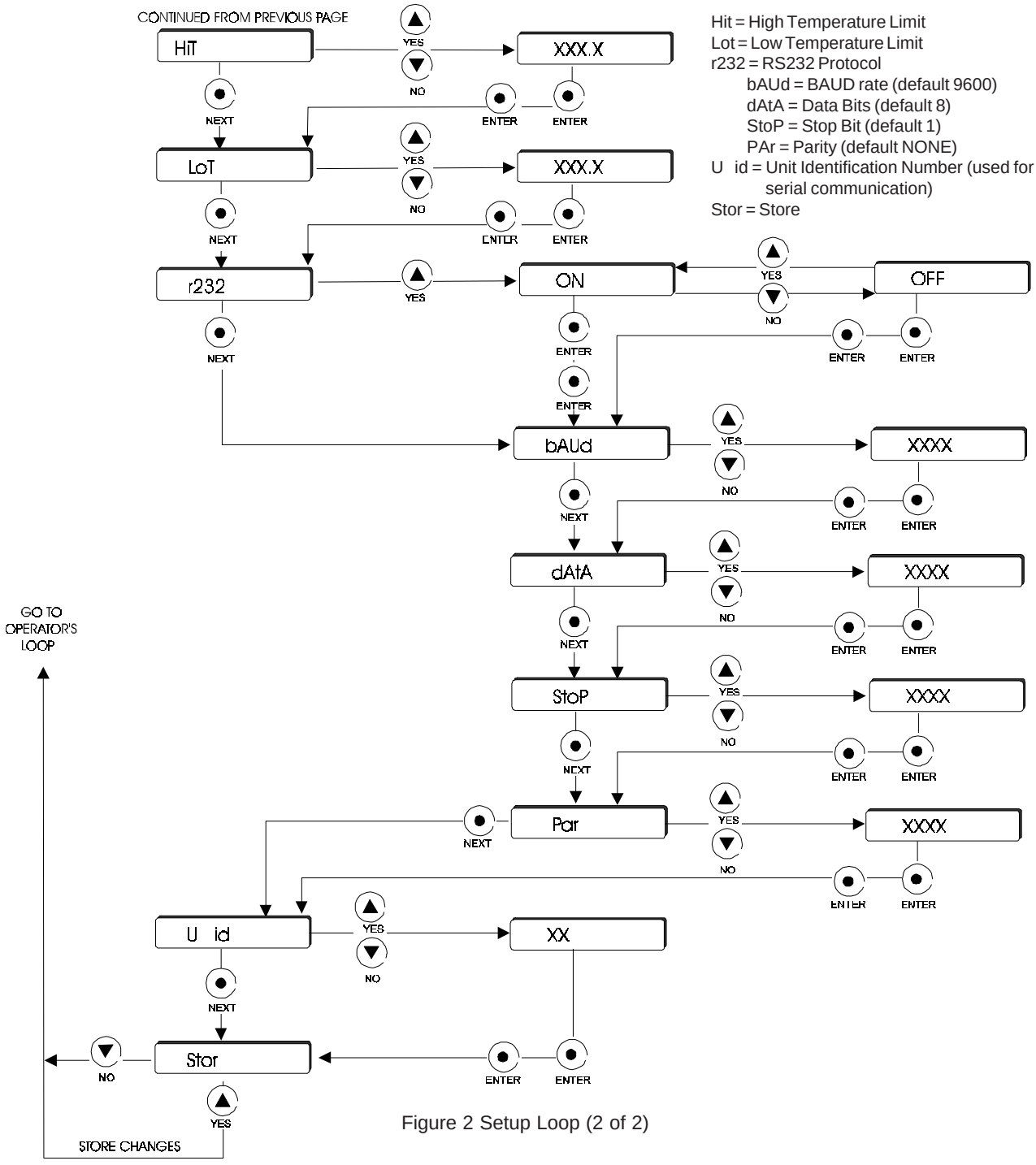

Figure 2 Setup Loop (2 of 2)

NOTE: To save *all* changes, when the display reads **Stor** press **YES**. Should you desire to return to the temperature display and abort *all* changes, when the display reads **Stor** press **NO.**

Error Messages

Error	Action
Er00:	ROM Checksum
Er01:	RAM Test Failed
Er03	Keypad Test Failed
Er04-13:	Interrupt Error
Er14:	Synchronous Error
Er15:	Asychronous Error
Er16:	Bad Calibration
LoT:	Low Temp Limit
HiT:	High Temp Limit
Er23:	RTD2 Shorted
Er24:	RTD2 Open/Not Installed
Er25:	RTD1 Shorted
Er26:	RTD1 Open
HTC:	High Temperature Cutout
PrES:	Pressure Cutout

NOTE: HTC and PrES are optional displays available only on specially modified units. Errors 00 through 15 will lockup the controller keypad. Errors 00 through 03 may be cleared by depressing the NEXT ENTER key.

Flow Control Valve (Optional)

An optional flow control valve is available to control external circulation. The valve assembly consists of the nine pieces shown below. Once assembled and installed on the unit, clamp a hose to the end of the assembly. Turn the unit on and check for leaks with the valve opened as well as closed.

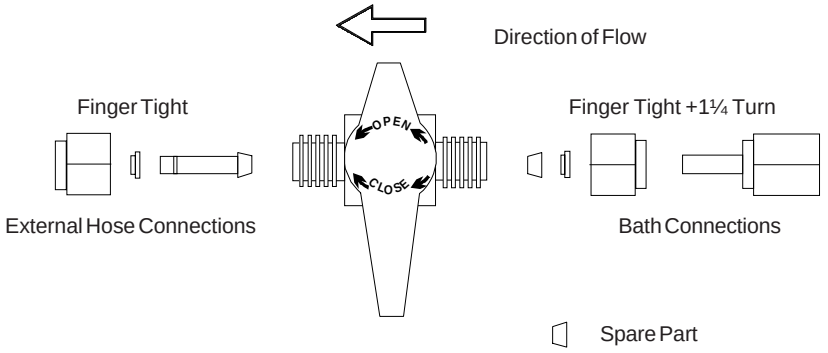

Autorefill (Optional)

The autorefill device is designed to maintain the correct level of fluid in the reservoir. The device consists of a float switch and a solenoid valve. If the fluid level falls, the float switch opens the solenoid valve allowing makeup fluid to fill the reservoir. Once the fluid reaches the proper level, the float switch rises and the solenoid valve closes.

The plumbing connection for the autorefill device, labeled WATER INLET, is located on the rear of the autorefill assembly. The connection is $^{3}/_{8}$" OD stainless steel. To prevent damage to your hosing and to prevent the hose from slipping of the connection, install the supplied hose barb into your tubing. Tubing is also available from NESLAB. Contact our Sales Department.

Remove the nut on the WATER INLET connection and install the tubing from your makeup fluid source. Reinstall the nut and tubing on the connection. Install the device on the unit. To secure the device to the unit, tighten the screw located between the float switch and the makeup fluid outlet line. If desired, place the supplied cover on the unit.

The autorefill device requires its own source of electrical power. A connector for the supplied line cord is also located on the rear of the autorefill device. The connector is labelled POWER.

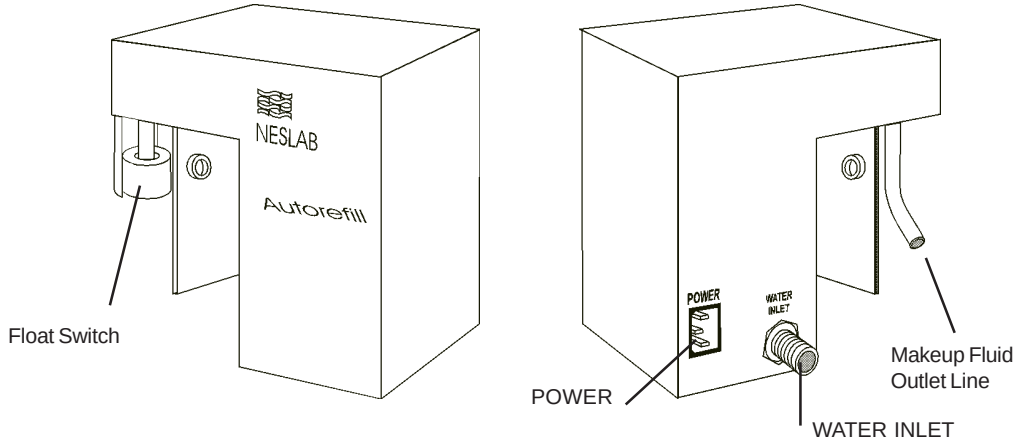

Sealable Bath Lid (Optional)

Depending on your application requirements and/or working environment, a bath lid is available to make RTE-111 reservoirs sealable (not pressurized).

The top of the pump grate in the unit's reservoir has four holes cut into the sheet metal. Align the protrusions on the lid with these holes as shown. A locking adjustable grip latch tightens the lid to the tank top allowing an EDPM gasket to create a seal.

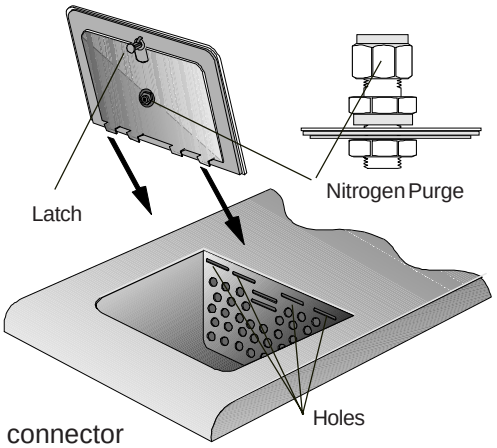

The lid also has a nitrogen purge port. The purge port is a ¼" male Swageloc connector with an o-ring seal.

High Temperature/ Low Liquid Level Safety

To protect your application, the adjustable High Temperature/Low Liquid Level Safety (HIGH TEMP/LOW LEVEL) ensures the heater will not exceed temperatures that can cause serious damage to your unit. A single temperature sensor, located on the heater coils in the bath, monitors both conditions. A High Temperature/Low Liquid Level fault occurs when the temperature of the sensor exceeds the set temperature limit. The safety switch has a temperature range of 7°C to 180°C.

In the event of a fault, the red LED near the adjustment dial will light, the display will go blank, and the unit will shut down. The cause of the fault must be identified and corrected before the unit can be restarted.

The safety is not preset and must be adjusted during initial installation.

To set the safety, locate the HIGH TEMP/LOW LEVEL SAFETY adjustment dial on the right side of the pump box. Turn the dial fully clockwise and turn the I/O switch off then back on.

Start the unit. Adjust the setpoint for a few degrees higher than the highest desired fluid temperature and allow the bath to stabilize at the temperature setpoint. Turn the HIGH TEMP/LOW LEVEL SAFETY dial counterclockwise until you hear a click and the unit shuts down. The red LED near the adjustment dial will light to indicate a fault has occurred.

Cool the bath and then, without moving the adjustment dial, turn the I/O switch off then back on.

NOTE: NESLAB recommends rechecking operation if the unit is moved.

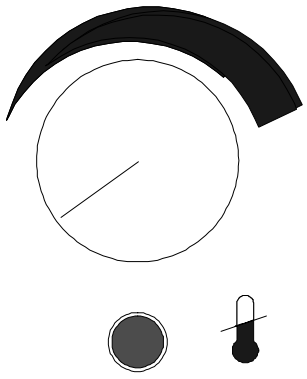

High Temperature/Low Liquid Level Safety

9-Pin Accessory Connector

The unit is equipped with two 9-pin D-connectors located on the rear of the control box. The female COMM is used for RS232 communication (see Appendix A); the male is used with an optional remote sensor.

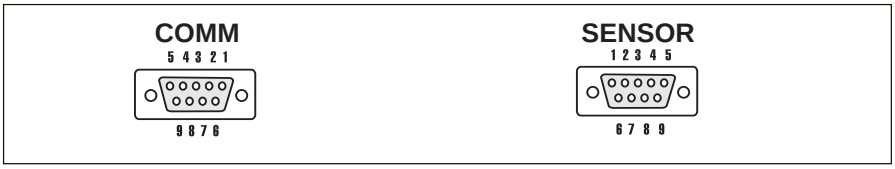

COMM Pin Connections

Pin #	Function
1	No connection.
2	TX = Transmitted data from controller
3	RX = Received data to controller
4	No connection
5	GND = Signal ground
6	No connection.
7	No connection
8	No connection
9	No connection

Hardware	Internal Connector	Mating Connector
	AMP Part# 745491-2	**AMP Part# 745492-2**

Remote Sensor Connections

Pin #	Function
1	3-wire RTD connection A
2	No connection
3	No connection
4	3-wire RTD connection A
5	No connection
6	No connection.
7	3-wire RTD connection B
8	No connection
9	No connection

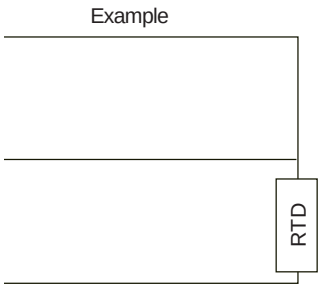

Hardware	Internal Connector	Mating Connector
	AMP Part# 745492-2	**AMP Part# 745491-2**

Analog Interface (Optional)

An optional 15-pin D subminiature female receptacle for analog interface is located on the rear of the control/pump box.

Pin #	Function
1	Chassis ground.
2	No connection.
3 - 5	No connection.
6	Analog Ground. The analog ground is physically separated from the power ground throughout the unit. To prevent offsets that result from ground currents, the analog and power grounds are only connected at the unit's power supply. Analog ground should only be used as a reference pin.
7	Temperature Out. The fluid temperature, as measured by the controller's sensor located in the reservoir, can be read at this pin. The temperature scale is 10mV/°C, referenced to analog ground, pin 6 (example: +150mV = +15.0°C).
8	No connection.
9	Power Ground (5V RTN).
10 - 13	No connection.
14	+5V. Power supply of +5VDC (15mA maximum).
15	Setpoint In. The temperature setpoint can be controlled by applying a known voltage to this pin. The temperature scale is 10mV/°C, referenced to analog ground, pin 6 (example: +230mV = +23.0°C). **Note**: The setpoint is updated only when the voltage represents a temperature within the setpoint limits.

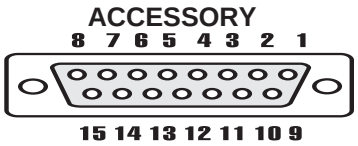

15 pin D-subminiature female receptacle

The analog setpoint signal (Setpoint In) is enabled using the unit's software. Using the Setup Loop discussed on page 13, keep depressing the NEXT ENTER key until SP is displayed. Use the YES or NO key to display the desired mode, AnA for analog or LoC for local, then press NEXT ENTER to continue with the loop. **NOTE:** The last value entered is maintained when SP is changed from AnA to LOC or LOC to AnA. Store the change.

The Analog In and Analog Out discussed in the Calibration Loop on pages 23 and 24 is applicable to this unit. Analog In calibration is done by applying a 2Vdc signal for AiH, and a 0Vdc signal for AiL. Reference the appropriate pins on the ACCESSORY connector.

Analog Out calibration is done by measuring the appropriate pins on the ACCESSORY connector. Adjust the AoH to 1.000Vdc using the YES and NO keys then press ENTER twice. Adjust the AoL to 0.000Vdc using the YES and NO keys then press ENTER twice.

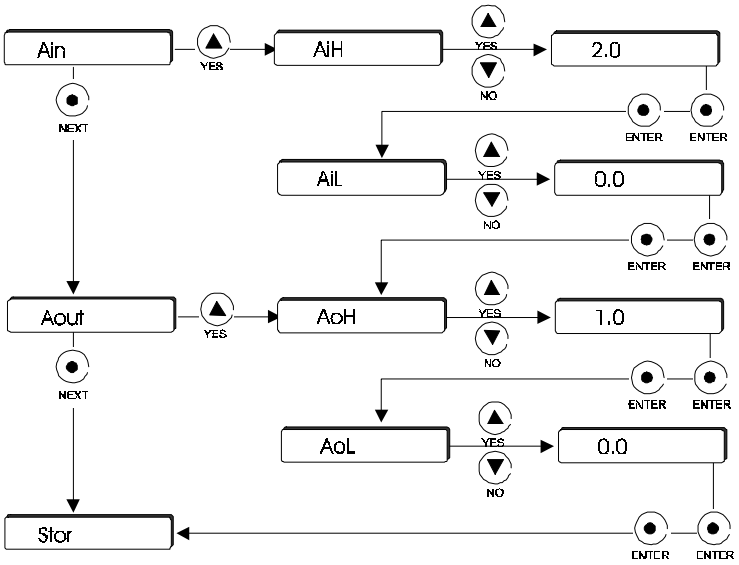

Section V Maintenance



To avoid electrical shock, disconnect the mains cord prior to removing any access panels or covers.

Service Contracts

NESLAB offers on-site Service Contracts designed to provide extended life and minimal down-time for your unit. For more information, contact our Service Department (see Preface, After-sale Support).

Condenser

For proper operation, the unit needs to pull substantial amounts of air through a condenser. A build up of dust or debris on the fins of the condenser will lead to a loss of cooling capacity.

Periodic vacuuming of the condenser is necessary. To access the condenser the front grille must be removed.



The unit must be turned off before the front panel is removed.

RTE-111 units have a one-piece grille assembly. Pull forward to remove.

RTE-211 and RTE-221 units have a two piece grille assembly. First remove the left (blue-colored) section by simply pulling it forward. Pull forward on the remaining (white-colored) section to remove it.

The frequency of cleaning depends on the operating environment. After initial installation, we recommend a monthly visual inspection of the condenser. After several months, the frequency of cleaning will be established.

Reservoir Cleaning

Routine cleaning can be achieved by simply sponging down the seamless stainless steel tank with tap water. (Dish washing detergent may be used but the tank must be thoroughly rinsed.)

To gain access to the entire reservoir the pump box and reservoir cover should be removed.

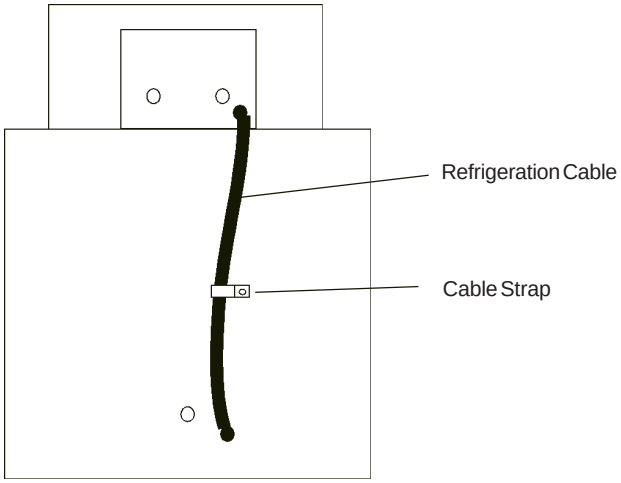

Remove the line cord from the rear of the unit and then remove the four screws (two on each side) securing the reservoir's cover.

To get slack on the refrigeration cable, remove the cable strap. The cable itself does not need to be disconnected.

Turn the cover assembly over and carefully place it on a supporting platform.

Algae

To restrict the growth of algae in the bath, we recommend the bath cover be kept in place and that all circulation lines be opaque. This will eliminate the entrance of light required for the growth of most common algae.

NESLAB recommends the use of Chloramine-T, 1 gram per 3½ liters.

Additional Loops

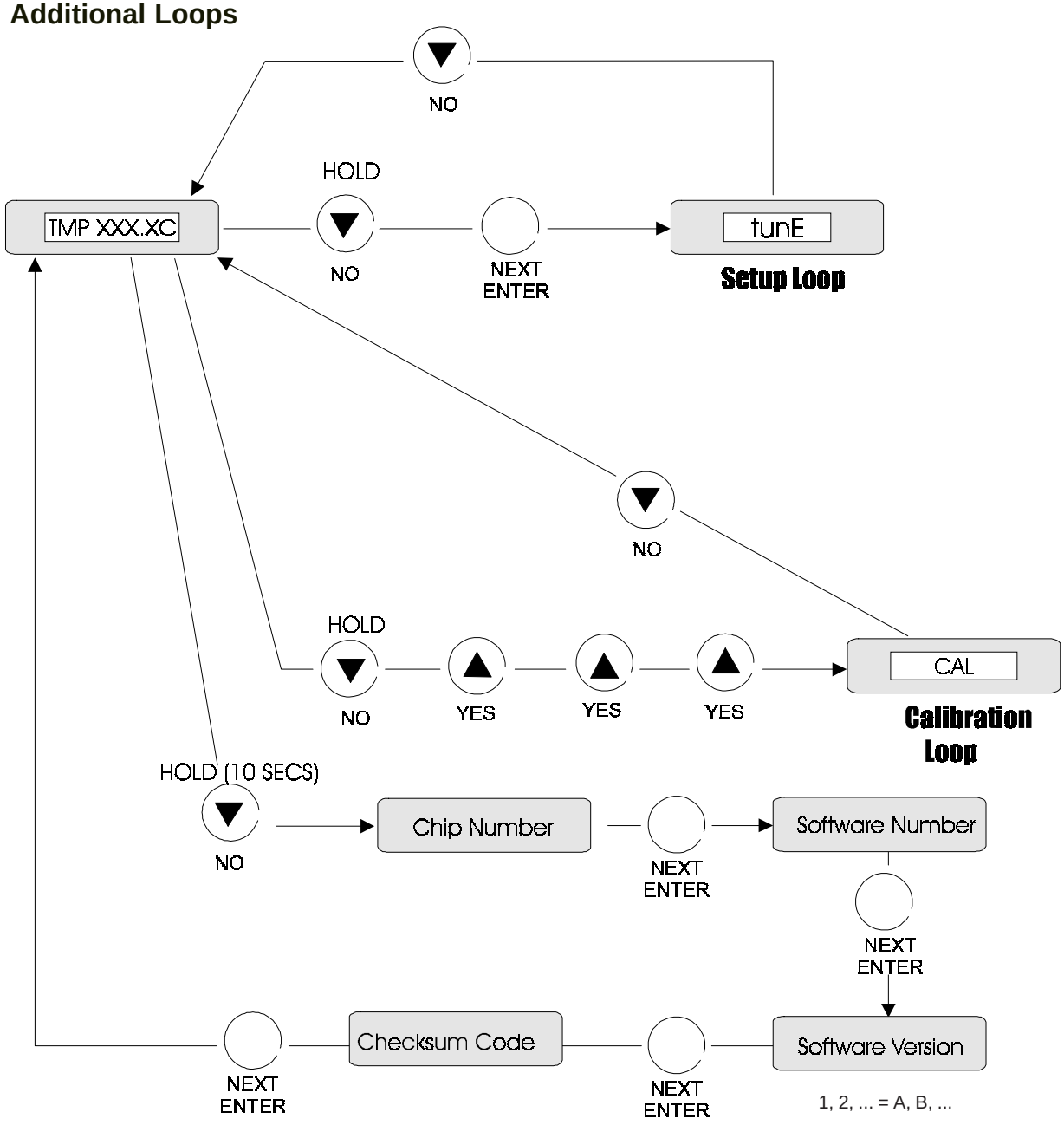

Figure 3 Additional Loops

Calibration Loop

The Calibration Loop is used to calibrate the RTD high and low temperature. The controller's internal temperature sensor is factory calibrated. We recommend calibrating any external sensor.

Enter the Calibration Loop from the Operator's Loop by pressing and holding the NO key while pressing the YES key three times.

Calibration Procedure

Install a calibrated reference thermometer in the bath. (For external mode, also install the sensor in the bath.) Place the cover on the unit.

The procedure uses the Operator's, Setup and Calibration Loops. In the Setup Loop place the unit in either the internal or external RTD mode of operation (RTD1 = Internal , RTD2 = External). Return to the Operator's Loop and adjust the setpoint to an appropriate high-end temperature.

NOTE: When calibrating the external sensor ensure the controller's SENSOR indicator is illuminated.

Once the bath reaches the setpoint and stabilizes, go to the Calibration Loop and, as illustrated on the next page, enter the actual reference thermometer reading at either the r1H or r2H prompt.

Store the change and return to the Operator's Loop. Adjust the setpoint to an appropriate low-end temperature. Once the bath reaches the setpoint and stabilizes, return to the Calibration Loop and enter the reference thermometer reading at either the r1L or r2L prompt. Store the change.



Do not pick points that are outside the safe operating limits of the fluid in your application. For example with a water bath, 90°C and 5°C would be typical calibration points.

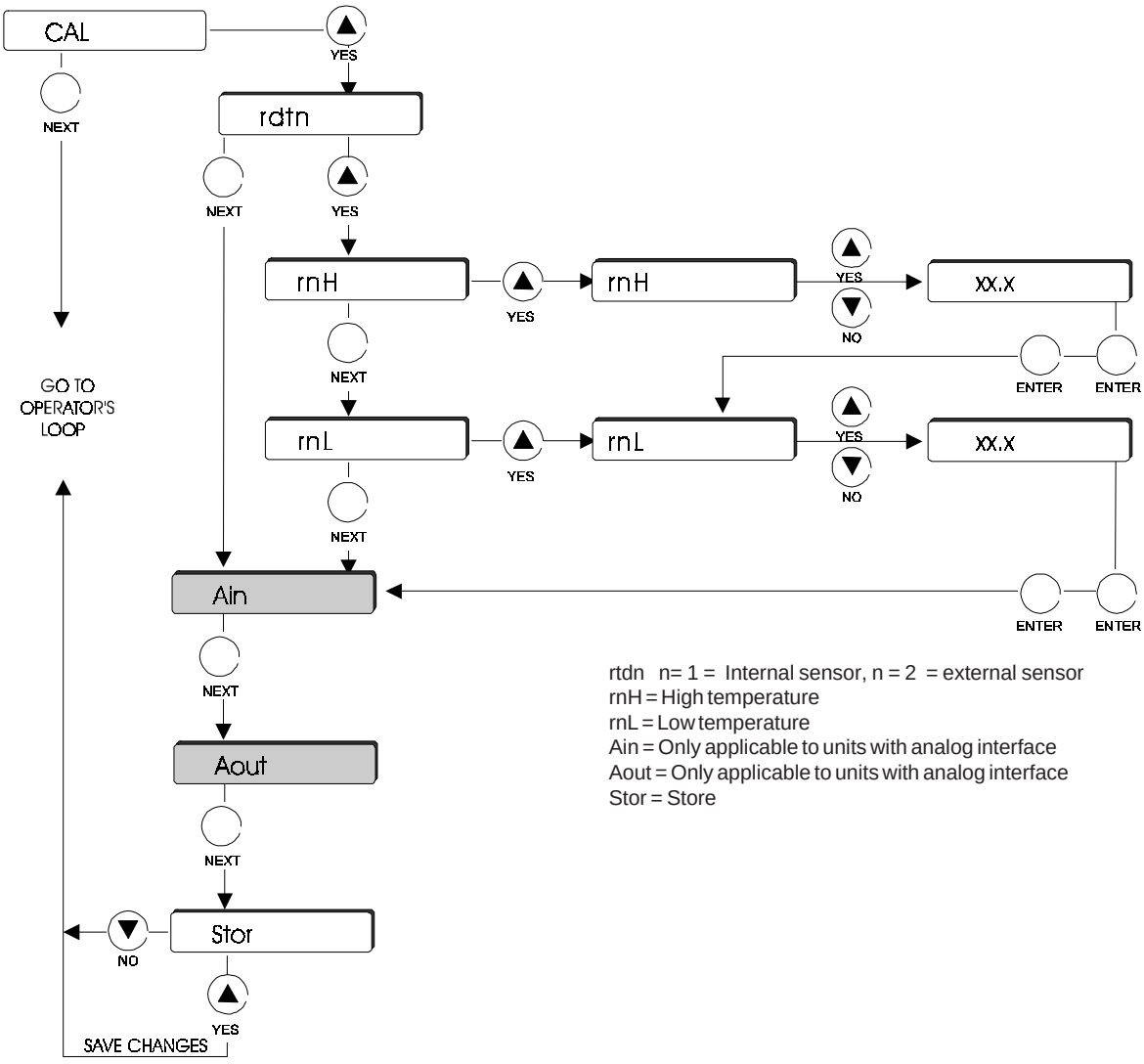

Figure 4 Calibration Loop

NOTE: To save *all* changes, when the display reads **Stor** press **YES**. Should you desire to return to the temperature display and abort *all* changes, when the display reads **Stor** press **NO.**

Section VI Troubleshooting

Checklist

Unit will not start

Make sure the voltage of the power source meets the specified voltage, ±10%. Refer to the serial number label on the rear of the unit to identify the specific electrical requirements of your unit.

Check the High Temperature/Low Liquid Level Safety. If the red LED on the side of the controller is on, make sure the fluid level in the bath is between the marks in the baffle and the HIGH TEMP/LOW LEVEL SAFETY setting is greater than the fluid temperature. Turn the I/O switch off then back on, and attempt to restart.

Loss of cooling capacity

Be sure the cooling capacity of the unit has not been exceeded if circulating to an external system.

When the unit is shut off, wait approximately five minutes before restarting. This allows time for the refrigeration pressures to equalize. If the pressures are not allowed to equalize, the compressor will short-cycle (clicking sound) and no cooling will occur.

Proper ventilation is required for heat removal. Make sure ventilation through the front and rear panels is not impeded and the panels are free of dust and debris.

Ice build up on the cooling coils can act as insulation and lower the cooling capacity. Raise the temperature of the bath to de-ice the cooling coil and increase the concentration of non-freezing fluid.

No external circulation

Check for obstructions, kinks, or leaks in the circulation tubing.

Circulation will cease when the pump head has been exceeded.

No/poor temperature control

Check RS232/remote operation on or off.

Check external sensor connection. Perform calibration.

Continued on next page.

No serial communications

All units are tested for serial communications before they leave the factory. Ensure the REMOTE indicator on the controller is illuminated.

Check all communications commands, they *must be exact*. See Appendix A.

Check communications settings. The protocol uses an RS-232 serial interface with the parameters: 9600 baud, 8 data bits, 1 stop bit and no parity.

Check all wiring for proper connections or possible shorts.

Software to verify serial communication is available from NESLAB.

Service Assistance and Technical Support

If, after following these troubleshooting steps, your unit fails to operate properly, contact our Customer Service Department for assistance (see Preface, After-sale Support). In addition to arranging warranty service, our Service Department can provide you with a wiring diagram and a complete list of spare parts for your unit. Before calling, please obtain the following:

Part number
Serial number
Software Version

Appendix A Serial Communications Protocol

NOTE: This appendix assumes you have a basic understanding of communications protocols.

All data is sent and received in binary form, do not use ASCII. In the following pages the binary data is represented in hexadecimal (hex) format.

The Neslab Serial Communications Protocol, NC, is based on a master-slave model. The master is a host computer, while the slave is the bath's controller. Only the master can initiate a communications transaction (half-duplex). The slave ends the transaction by responding to the master's query. The protocol uses an RS-232 serial interface with the default parameters: 9600 baud, 1 start bit, 8 data bits, 1 stop bit and no parity.

NOTE: Before the unit will communicate, RS232 must be turned on in the controller's Setup Loop.

The unit can be controlled through your computer's serial port by using the unit's standard 9-pin RS-232 connection. Data read of the serial port connects to the data transmit (pin 2) of the bath. Data transmit of the serial port connects to data read (pin 3) of the bath.

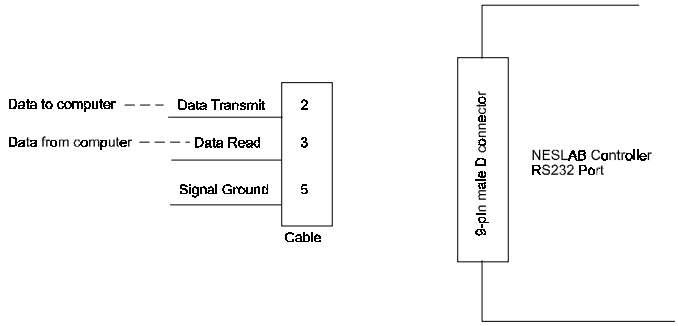

Communication cables are available from NESLAB. Contact our sales department for additional information.

All commands must be entered in the exact format shown in the tables on the following pages. The tables on on the last page of this Appendix show all commands available, their format and responses. Controller responses are either the requested data or an error message. The controller response *must* be received before the host sends the next command.

The host sends a command embedded in a single communications packet, then waits for the controller's response. If the command is not understood or the checksums do not agree, the controller responds with an error command. Otherwise, the controller responds with the requested data. If the controller fails to respond within 1 second, the host should resend the command.

NEScom Serial Communications Protocol

NOTE: All byte values are shown in hex, hex represents the binary values that must be sent to the bath. **Do not use ASCII.**

The framing of the communications packet in both directions is:

	Checksum region						
Lead char CA	Addr-MSB 00	Addr-LSB 01	Command	n d-bytes	d-byte 1 ...	d-byte n	Checksum

Lead char	CA (hex).
	Device address is 1
Addr-msb	Most significant byte of device address is 00 hex.
Addr-lsb	Least significant byte of device address is 01 hex.
Command	Command byte (see Table 1).
n d-bytes	Number of data bytes to follow (00 to 03 hex).
d-byte 1	1st data byte (the qualifier byte is considered a data byte).
...	...
d-byte n	nth data byte.
Checksum	Bitwise inversion of the 1 byte sum of bytes beginning with the most significant address byte and ending with the byte preceding the checksum. (To perform a bitwise inversion, "exclusive OR" the one byte sum with FF hex.)

The master requests information by sending one of the Read Functions as shown in Table 1 on page 30. Since no data is sent to the bath during a read request, the master uses 00 for the number of data bytes following the command byte.

The bath will respond to a Read Function by echoing the lead character, address, and command byte, followed by the requested data and checksum. When the bath sends data, a qualifier byte is sent first, followed by a two byte signed integer (16 bit, MSB sent first). The qualifier byte indicates the precision and units of measure for the requested data as detailed in Table 2, see page 30.

As an example, the master requests to read internal temperature by sending:



If the temperature is -10.5°C, the slave would reply:

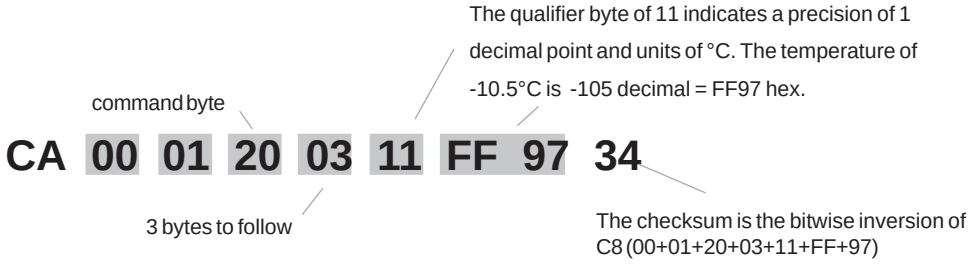

The master sets parameters in the bath by sending one of the Set Functions as shown in Table 1. The master does not send a qualifier byte in the data field. The master should be preprogrammed to send the correct precision and units (it could also read the parameter of interest first to decode the correct precision and units needed).

For example, if the master wants to set the setpoint to 30°C, it would send :

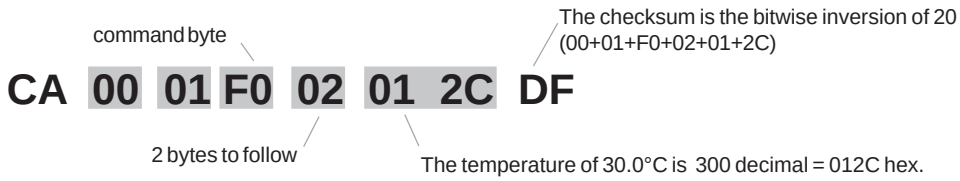

The slave responds:

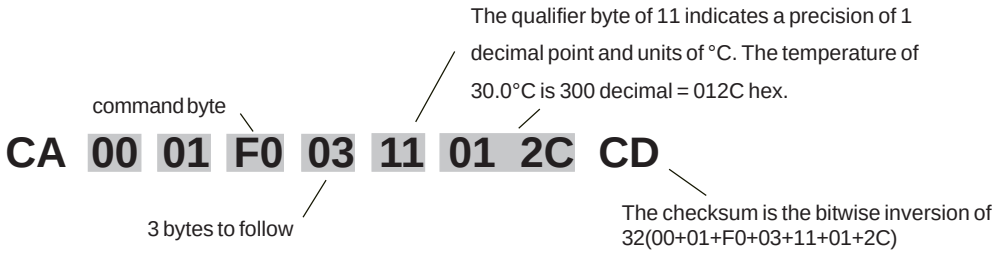

Table 1 (All bytes are in hex)

FUNCTION	MASTER SENDS	BATH RESPONDS
READ		
Read Internal Temperature	CA 00 01 **20** 00 DE	CA 00 01 **20** 03 qb d1 d2 cs
Read External Sensor	CA 00 01 **21** 00 DD	CA 00 01 **21** 03 qb d1 d2 cs
Read Setpoint (control point)	CA 00 01 **70** 00 8E	CA 00 01 **70** 03 qb d1 d2 cs
Read Low Temperature Limit	CA 00 01 **40** 00 BE	CA 00 01 **40** 03 qb d1 d2 cs
Read High Temperature Limit	CA 00 01 **60** 00 9E	CA 00 01 **60** 03 qb d1 d2 cs
Read Proportional Band (P)	CA 00 01 **71** 00 8D	CA 00 01 **71** 03 qb d1 d2 cs
Read Integral (I)	CA 00 01 **72** 00 8C	CA 00 01 **72** 03 qb d1 d2 cs
Read Derivative (D)	CA 00 01 **73** 00 8B	CA 00 01 **73** 03 qb d1 d2 cs
SET		
Set Setpoint (control point)*	CA 00 01 **F0** 02 d1 d2 cs	CA 00 01 **F0** 03 qb d1 d2 cs
Set Low Temperature Limit*	CA 00 01 **C0** 02 d1 d2 cs	CA 00 01 **C0** 03 qb d1 d2 cs
Set High Temperature Limit*	CA 00 01 **E0** 02 d1 d2 cs	CA 00 01 **E0** 03 qb d1 d2 cs
Set Proportional Band (P=1-99.9)	CA 00 01 **F1** 02 d1 d2 cs	CA 00 01 **F1** 03 qb d1 d2 cs
Set Integral (I = 0-9.99)	CA 00 01 **F2** 02 d1 d2 cs	CA 00 01 **F2** 03 qb d1 d2 cs
Set Derivative (D= 0-5.0)	CA 00 01 **F3** 02 d1 d2 cs	CA 00 01 **F3** 03 qb d1 d2 cs
BATH ERROR RESPONSES		
Bad Command	N/A	CA 00 01 **0F** 02 01 ed cs
Bad Checksum	N/A	CA 00 01 **0F** 02 03 ed cs
MISCELLANEOUS		
Request Acknowledge	CA 00 01 **00** 00 FE	CA 00 01 **00** 02 v1 v2 cs

command bytes shown in **bold**
qb = qualifier byte
d1,d2 = 16 bit signed integer of the value being sent or received
cs = the checksum of the string (see text)
ed = echo back of the command byte as received
v1,v2 = protocol version
* = limited to the range of the bath

Table 2

QUALIFIER BYTE	
10 hex	0.1 precision, no units of measure
20 hex	0.01 precision, no units of measure
11 hex	0.1 precision, °C units

Example: The temperature of 45.6 °C would be represented by the qualifier 11 hex, followed by the 2 bytes 01 C8 hex (456 decimal).

Appendix B Programming Software

NEScom Software/ RS232 Communication

The NESLAB Communications Software is a user-friendly software that allows you to automate your temperature control process. The software includes a 3½" disk, comprehensive operator's manual and a toll-free number to a trained technical staff.

NEScom Software allows you to write custom temperature programs for our Digital or Microprocessor based temperature control apparatus. Choose upper or lower temperature limits and monitor system status with an alarm. NEScom can also record your results on a user selectable graph. NesCom must be used with an IBM or 100% compatible computer.

Select from easy to use product icons.

Create graphs and charts.

Easily configure ramping functions that set the setpoint over time.

View pop-up alarm windows that display if an alarm condition occurred.

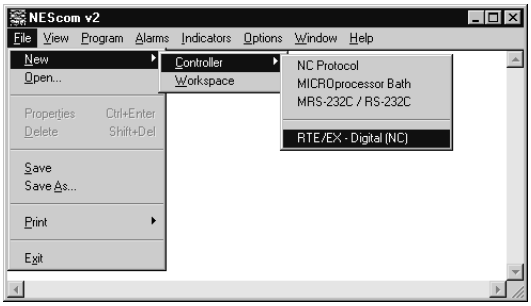

Select software functions from the easy to use pulldown menus.

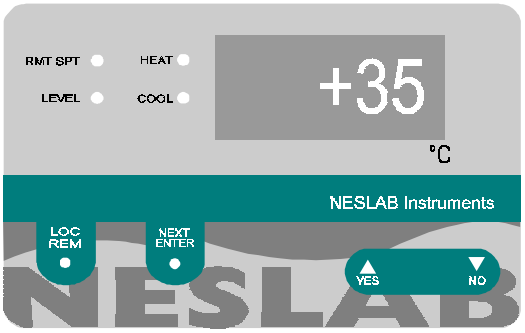

View a virtual controller screen which allows remote monitoring and operation of product control panel.

WARRANTY

NESLAB Instruments, Inc. warrants for 12 months from date of shipment any NESLAB unit according to the following terms.

Any part of the unit manufactured or supplied by NESLAB and found in the reasonable judgment of NESLAB to be defective in material or workmanship will be repaired at an authorized NESLAB Repair Depot without charge for parts or labor. The unit, including any defective part must be returned to an authorized NESLAB Repair Depot within the warranty period. The expense of returning the unit to the authorized NESLAB Repair Depot for warranty service will be paid for by the buyer. NESLAB's responsibility in respect to warranty claims is limited to performing the required repairs or replacements, and no claim of breach of warranty shall be cause for cancellation or recision of the contract of sales of any unit.With respect to units that qualify for field service repairs, NESLAB's responsibility is limited to the component parts necessary for the repair and the labor that is required on site to perform the repair. Any travel labor or mileage charges are the financial responsibility of the buyer.

The buyer shall be responsible for any evaluation or warranty service call (including labor charges) if no defects are found with the NESLAB product.

This warranty does not cover any unit that has been subject to misuse, neglect, or accident. This warranty does not apply to any damage to the unit that is the result of improper installation or maintenance, or to any unit that has been operated or maintained in any way contrary to the operating or maintenance instructions specified in NESLAB's Instruction and Operation Manual. This warranty does not cover any unit that has been altered or modified so as to change its intended use.

In addition, this warranty does not extend to repairs made by the use of parts, accessories, or fluids which are either incompatible with the unit or adversely affect its operation, performance, or durability.

NESLAB reserves the right to change or improve the design of any unit without assuming any obligation to modify any unit previously manufactured.

THE FOREGOING EXPRESS WARRANTY IS IN LIEU OF ALL OTHER WARRANTIES, EXPRESSED OR IMPLIED, INCLUDING BUT NOT LIMITED TO WARRANTIES OR MERCHANTABILITY AND FITNESS FOR A PARTICULAR PURPOSE.

NESLAB'S OBLIGATION UNDER THIS WARRANTY IS STRICTLY AND EXCLUSIVELY LIMITED TO THE REPAIR OR REPLACEMENT OF DEFECTIVE COMPONENT PARTS AND NESLAB DOES NOT ASSUME OR AUTHORIZE ANYONE TO ASSUME FOR IT ANY OTHER OBLIGATION.

NESLAB ASSUMES NO RESPONSIBILITY FOR INCIDENTAL, CONSEQUENTIAL, OR OTHER DAMAGES INCLUDING, BUT NOT LIMITED TO LOSS OR DAMAGE TO PROPERTY, LOSS OF PROFITS OR REVENUE, LOSS OF THE UNIT, LOSS OF TIME, OR INCONVENIENCE.

This warranty applies to units sold in the United States. Any units sold elsewhere are warranted by the affiliated marketing company of NESLAB Instruments, Inc. This warranty and all matters arising pursuant to it shall be governed by the law of the State of New Hampshire, United States. All legal actions brought in relation hereto shall be filed in the appropriate state or federal courts in New Hampshire, unless waived by NESLAB.

RTE-140 Refrigerated Bath/Circulator With Analog/Digital Controller

Thermo NESLAB Manual P/N 000022
Rev. 11/17/00

Instruction and Operation Manual

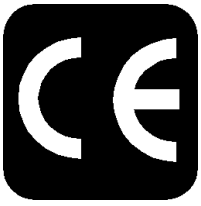

RTE-140 Refrigerated Bath/Circulator
Instruction and Operation Manual

Table of Contents

PREFACE

Compliance 2
Unpacking 2
Warranty 2
NES-care 2
After-sale Support 2

SECTION I
Safety

Warnings 3

SECTION II
General Information

Description 4
Specifications 4

SECTION III
Installation

Site 5
Electrical Requirements 5
Plumbing Requirements 6
Fluids 8
Filling Requirements 8

SECTION IV
Controllers

Controllers 9
Start Up 9
Shut Down 10
High Temperature/Low Liquid Level Safety 11
15-Pin Accessory Connector 12

SECTION V
Maintenance

Service Contracts 13
Condenser 13
Reservoir Cleaning 14
Algae 14

SECTION VI
Troubleshooting

Checklist 15
Service Assistance and Technical Support 15

APPENDIX NESCOM SOFTWARE

SECTION VII
Warranty 17

Preface

Compliance

Products tested and found to be in compliance with the requirements defined in the EMC standards defined by 89/336/EEC as well as Low Voltage Directive (LVD) 73/23/EEC can be identified by the CE label on the rear of the unit. The testing has demonstrated compliance with the following directives:

LVD, 73/23/EEC	Complies with UL 3101-1:93
EMC, 89/336/EEC	EN 55011, Class A Verification EN 50082-1:1992 IEC 1000-4-2:1995 IEC 1000-4-3:1994 IEC 1000-4-4:1995

For any additional information refer to the Letter of Compliance that shipped with the unit (Declaration of Conformity).

Unpacking

Retain all cartons and packing material until the unit is operated and found to be in good condition. If the unit shows external or internal damage, or does not operate properly, contact the transportation company and file a damage claim. Under ICC regulations, this is your responsibility.

Warranty

Units have a warranty against defective parts and workmanship for one full year from date of shipment. See back page for more details.

NES-care Extended Warranty Contract

- Extend parts and labor coverage for an additional year.
- Worry-free operation.
- Control service costs.
- Eliminate the need to generate repair orders.
- No unexpected repair costs.

Other contract options are available. Please contact Thermo NESLAB for more information.

After-sale Support

Thermo NESLAB is committed to customer service both during and after the sale. If you have questions concerning the operation of your unit or the information in this manual, contact our Sales Department. If your unit fails to operate properly or if you have questions concerning spare parts or Service Contracts, contact our Service Department.

Before calling, *please* refer to the serial number label on the rear of the case top to obtain the following information:

- BOM number _____

- Serial number _____

Section I Safety

Warnings

Make sure you read and understand all instructions and safety precautions listed in this manual before installing or operating your unit. If you have any questions concerning the operation of your unit or the information in this manual, contact our Sales Department.

Performance of installation, operation, or maintenance procedures other than those described in this manual may result in a hazardous situation and may void the manufacturer's warranty.

Transport the unit with care. Sudden jolts or drops can damage the refrigeration lines. The unit weighs approximately 99 pounds (45 kilograms) and should be transported with equipment designed to lift that weight.

Observe all warning labels.

Never remove warning labels.

Never operate damaged or leaking equipment.

Never operate the unit without bath fluid in the bath.

Above 115°C, never use pure ethylene glycol as a bath fluid.

For 220 - 240 volt units supplied without a line cord, use a harmonized (HAR) grounded 3-conductor cord, type H 0 5 V V - F , with conductors listed below. A suitable cord end is required for connecting to the equipment (see unit socket) and must terminate with an IEC approved plug for proper connection to power supply.

Example: Nominal 1.0 mm² cross section rated 10 Amps
Unit Socket: IEC - 320 C13

Always turn off the unit and disconnect the line cord from the power source before performing any service or maintenance procedures, or before moving the unit.

Always empty the bath before moving the unit.

Never operate equipment with damaged line cords.

Refer service and repairs to a qualified technician.

In addition to the safety warnings listed above, warnings are posted throughout the manual. These warnings are designated by an exclamation mark inside an equilateral triangle with text highlighted in bold print. Read and follow these important instructions. Failure to observe these instructions can result in permanent damage to the unit, significant property damage, personal injury or death.

Section II General Information

Description

The RTE-140 Refrigerated Bath/Circulators are designed to provide temperature control for applications requiring a fluid work area or pumping to an external system.

Units consist of a non-CFC air-cooled refrigeration system, circulation pump, seamless stainless steel bath, work area cover, and a temperature controller.

Specifications

Temperature Range	
Analog controller	-40°C to +100°C
Digital controller	-40°C to +150°C
Temperature Stability[1,2,3]	
Analog controller	±0.1°C
Digital controller	±0.05°C
Cooling Capacity[4]	
Watts	500 @ 0°C
BTU/H	1705 @ 0°C
Pump Capacity	15 lpm at 0' (0 M) 0 lpm at 16' (4.9 M)
Heater	
Watts	800
50 Hz Models	1000
Bath Work Area	
(L x W x D)	
Inches	4 3/4 x 8 x 5
Centimeters	12.1 x 20.3 x 12.7
Bath Volume	
Liters	7.0
Case Dimensions	
(H x W x D)	
Inches	26 x 12 3/8 x 19
Centimeters	66.0 x 31.4 x 48.3
Power Requirements[5]	115 V, 60 Hz, 16 Amp 220/240 V, 50 Hz, 8.6 Amp

1. Specifications listed for units operating at 20°C bath temperature using water.
2. For operation below 0°C, covering the bath work area may improve stability.
3. For some applications, agitation and stability above ambient temperatures may be may be improved by connecting a small length of hose between the PUMP INLET and PUMP OUTLET connections on the rear of the unit.
4. 60 Hertz units, 375 watts for 50 Hertz. Specifications listed for units operating at 0°C bath temperature, +20°C (+70°F) ambient, using fluid with a specific gravity of 0.5
5. Power Board Transformer Fuse–Analog T 0.5A 250V (Qty 1), Digital T 0.8A 250V (Qty 2) [T=Time Delay]

Section III Installation

Site

The indentations on the sides of the unit are designed to function as handles. Lift the unit by the handles and locate it on a sturdy table or bench top. Ambient temperatures should be inside the range of +50°F to +104°F (+10°C to +40°C).



Never place the unit in a location where excessive heat, moisture, or corrosive materials are present.

The unit has an air-cooled refrigeration system. Air is drawn through the front panel and discharged through the rear panel. The unit must be positioned so the air intake and discharge are not impeded. A minimum clearance of 12 inches (30 centimeters) at the front and rear of the unit is necessary for adequate ventilation. Inadequate ventilation will reduce cooling capacity and, in extreme cases, can cause compressor failure.

Excessively dusty areas should be avoided and a periodic cleaning schedule should be instituted (see Section VI, Cleaning).

The unit will retain its full rated capacity in ambient temperatures up to approximately +68°F (+20°C). Above +68°F, derate the cooling capacity 1% for every 1°F above +68°F to a maximum ambient temperature of 104°F. In terms of Celsius, derate the cooling capacity 1% for every 0.5°C above +20°C, to a maximum ambient temperature of +40°C.

Electrical Requirements



Line voltage may be easily accessible inside the pump/control box. Always unplug the unit prior to removing pump/control box cover.

Refer to the serial number label on the rear of the unit to identify the specific electrical requirements of your unit.

Ensure the voltage of the power source meets the specified voltage, ±10%.

The unit construction provides extra protection against the risk of electric shock by grounding appropriate metal parts. The extra protection may not function unless the power cord is connected to a properly grounded outlet. It is the user's responsibility to assure a proper ground connection is provided.



For 220 - 240 volt units supplied without a line cord, use a harmonized (HAR) grounded 3-conductor cord, type H 0 5 V V - F , with conductors listed below. A suitable cord end is required for connecting to the equipment (see unit socket) and must terminate with an IEC approved plug for proper connection to power supply.

Example: Nominal 1.0 mm² cross section rated 10 Amps
Unit Socket: IEC - 320 C13

Plumbing Requirements

Ensure the unit is off before connecting tubing to the unit.

To prevent damage to the plumbing lines, always support the ¾" fittings while installing/removing the pumping caps and lines.

Hose Connections

The pump connections are located at the rear of the pump box and are labelled PUMP INLET and PUMP OUTLET. These connections are bent upward so the recirculating fluid will drain back into the reservoir when the hoses are disconnected. Both connections are capped with stainless steel serrated plugs.

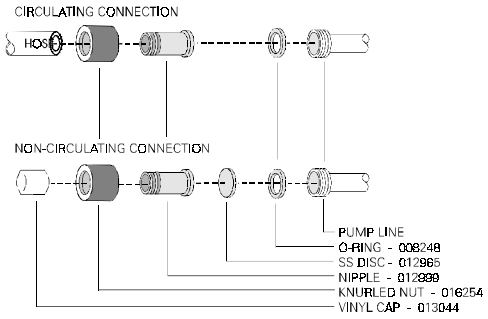

The pump lines have ¼" male pipe threads for mating with standard plumbing fittings. For your convenience two stainless steel adapters, ¼" female pipe thread to ⅜" O.D. serrated fitting, are provided. (To assure proper fit, they should be installed using Teflon® tape around the threads.)

Flexible tubing, if used, should be of heavy wall or reinforced construction. Make sure all tubing connections are securely clamped. Avoid running tubing near radiators, hot water pipes, etc. If substantial lengths of tubing are necessary, insulation may be required to prevent loss of cooling capacity.

Tubing and insulation are available from Thermo NESLAB. Contact our Sales Department for more information (see Preface, After-sale Support).

It is important to keep the distance between the unit and the external system as short as possible, and to use the largest diameter tubing practical. Tubing should be straight and without bends. If diameter reductions must be made, make them at the inlet and outlet of the external system, not at the unit.

If substantial lengths of cooling lines are required, they should be pre-filled with bath fluid before connecting them to the unit. This will ensure that an adequate amount of fluid will be in the bath once it is in operation.

Pumping

The pump is designed to deliver a flow of 15 liters/minute (4 gallons minute) at 0 feet head. To prevent external circulation, the PUMP INLET and PUMP OUTLET lines on the rear of the unit are capped. The caps must be removed when external circulation is required.

To properly secure external hose connections to the unit, wrap Teflon® tape around the pipe line threads before installation. Once the hose connections are made, the hoses must be properly plumbed to an external system. *It is important the bath is not in operation until all plumbing is complete.*

NOTE: To increase agitation in the bath when not circulating externally, connect a short loop of hose between the inlet and outlet lines.

If the bath is not used for external circulation, make sure the stainless steel caps are in place prior to operating the bath.

Circulating to an open container

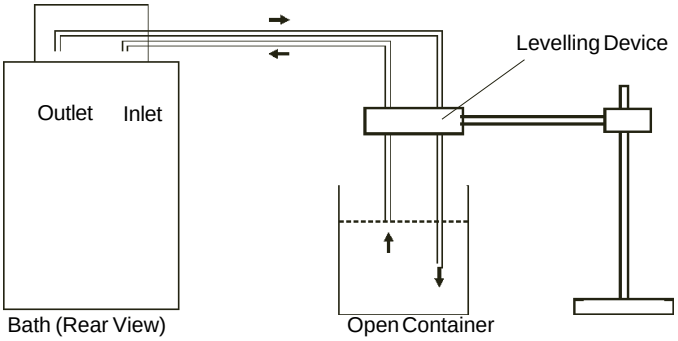

A stainless steel leveling device is available to aid circulation to an open vessel. Contact our Sales Department for more information (see Preface, After-sale Support).

Support the leveling device over the open container with a ringstand. Stagger the tubes in the leveling device so one tube is submerged in the vessel fluid, and the other tube is level with the fluid surface. Connect the deeper tube to the PUMP OUTLET and the shorter tube to the PUMP INLET.

Adjust the flow rate using the accessory flow control valve connected to the PUMP OUTLET, or by partially restricting the outlet tubing. When properly adjusted, the pump inlet will draw an occasional air bubble to prevent over flow, and the pump outlet will force fluid through the submerged tube to prevent aeration of the vessel.

To avoid siphoning the bath work area when the unit is shut off, lift the leveling device out of the vessel and above the level of the unit.

Circulating through two closed loops

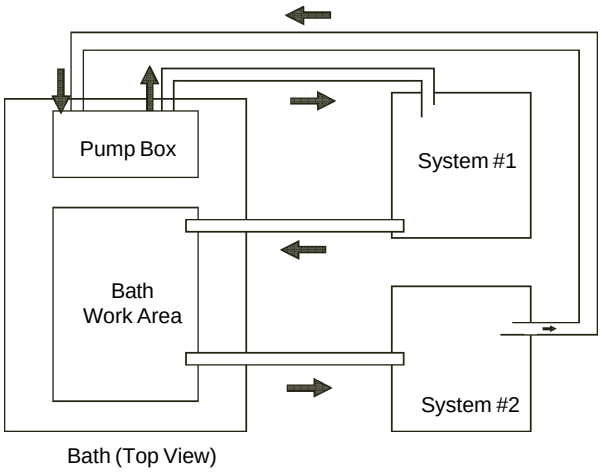

The pump can be used to circulate through two closed loop systems. Connect the shortest practical length of flexible tubing from the PUMP OUTLET to the inlet of external system #1. Connect the outlet of system #1 directly into the bath work area. Connect tubing from the bath work area to the inlet of system #2. Connect the outlet of system #2 to the PUMP INLET.

Drain



Ensure the temperature of the bath fluid is safe before draining the unit.

The unit is equipped with a drain located at the back of the unit at the base of the bath. The drain has ¼ inch male pipe threads and is capped with a stainless steel plug. To drain the reservoir simply remove the cap.

To assure proper fit when replacing the cap, be sure to line the threads with Teflon® tape.

Fluids



Never use flammable or corrosive fluids with this unit.

The selected fluid must have a viscosity of 50 centistokes or less at the lowest operating temperature.

Filtered tap water is the recommended fluid for operation from +8°C to +80°C.

For operation from +8°C to -30°C, a 50/50 mixture, by volume, of filtered tap water and laboratory grade ethylene glycol is suggested.

Above +80°C and below -30°C, the user is responsible for fluids used.



Never use pure ethylene glycol as a bath fluid. A minimum 80/20 mixture of Ethylene Glycol and filtered tap water is allowed.

Filling Requirements

The bath work area has a high and low level marker to guide filling. The markers are 1 inch horizontal slits located in the center of the stainless steel baffle separating the work area and the pump assembly. The correct fluid level falls between these two markers. The heating and cooling coils will be exposed and may become damaged if the correct fluid level is not provided.

When pumping to an external system, keep extra fluid on hand to maintain the proper level in both the circulating lines and the external system.



Never run the unit when the work area is empty. Avoid overfilling. Overfilling the bath may damage the insulation and affects stability as well as low-end performance.

Section IV Controllers

Controllers

Two standard temperature controllers are available with the unit: Analog and Digital. This section explains the installation and operation of the controllers.

Start Up

Before starting the unit, check all electrical and plumbing connections and make sure the work area has been properly filled with bath fluid.

To start the unit press the I/O switch on the side of the controller to the **I** (power on) position. The pump will start and the POWER LED will light.

220V units have a circuit breaker instead of a switch. The circuit breaker is labeled **I** (power on) and **O** (power off). Ensure the circuit breaker is in the **I** position.

The REFRIGERATION switch should be ON for normal operation below 40°C.

Operating the refrigeration above 40°C could result in premature compressor failure.

The HEAT LED indicates the status of the heater. As the temperature of the fluid in the bath approaches the temperature setpoint, the lamp will cycle on and off to indicate the approximate duty cycle of the heater.

Analog Temperature Adjustment

Units with Analog temperature controller are equipped with a glass tube thermometer. Insert the thermometer in the grommet located on the left side of the work area.

To adjust the bath temperature, turn the dial to the desired setpoint. Use the bath thermometer to make fine adjustments to the bath temperature.

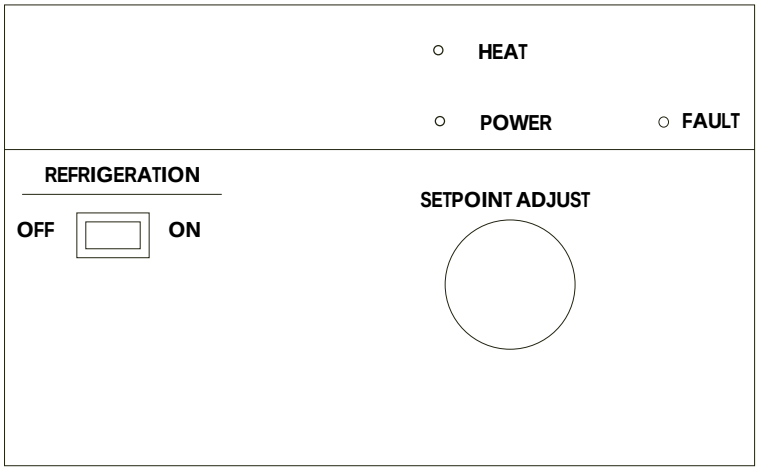

Analog Controller

Digital Temperature Adjustment

To display the temperature setpoint, press the DISPLAY switch. To adjust the setpoint, press and hold the DISPLAY switch and turn the COARSE and FINE dials until the temperature setpoint is indicated on the LED display.

NOTE: Inadvertent movement of the COARSE and FINE dials, regardless of the position of the DISPLAY switch, will result in a change of the setpoint. The change will not be immediately reflected on the LED display unless the DISPLAY switch is pressed. The display will eventually change as the unit responds to the new setpoint.

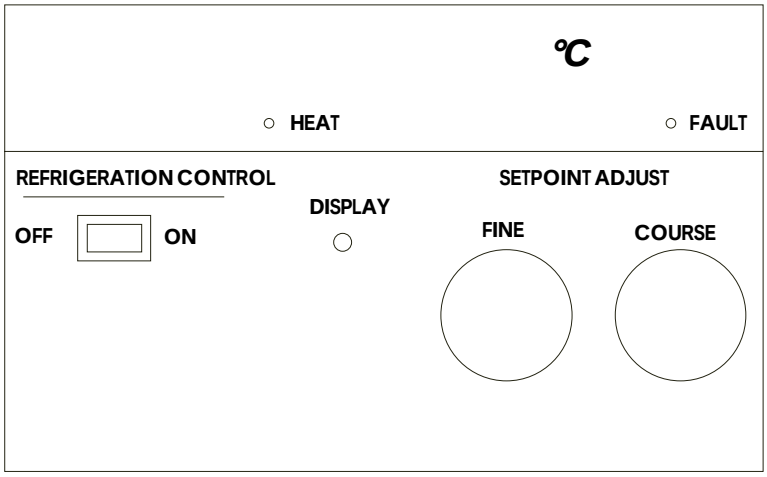

Digital Controller

Shut Down

When the unit is shut off wait approximately five minutes before restarting. This allows time for the refrigeration pressures to equalize. If the pressures are not allowed to equalize, the compressor will short-cycle (clicking sound) and no cooling will occur.

High Temperature/ Low Liquid Level Safety

To protect your application, the adjustable High Temperature/Low Liquid Level Safety (HIGH TEMP/LOW LEVEL) ensures the heater will not exceed temperatures which can cause serious damage to your unit. A single temperature sensor, located on the heater coils in the bath, monitors both conditions. A High Temperature/Low Liquid Level fault occurs when the temperature of the sensor exceeds the set temperature limit.

In the event of a fault, the unit will shut down. The cause of the fault must be identified and corrected before the unit can be restarted.

The safety is not pre-set and must be adjusted during initial installation.

To set the safety, locate the HIGH TEMP/LOW LEVEL SAFETY adjustment dial on the right side of the pump box. Turn the dial fully clockwise and press the red RESET switch. The RESET switch is located next to the adjustment dial.

Start the unit. Adjust the setpoint for a few degrees higher than the highest desired fluid temperature and allow the bath to stabilize at the temperature setpoint. Turn the HIGH TEMP/LOW LEVEL SAFETY dial counter-clockwise until you hear a click and the unit shuts down. The red FAULT LED on the temperature controller will light to indicate a fault has occurred.

Cool the bath and then, without moving the adjustment dial, press the red RESET switch.

NOTE: The minimum high temperature safety setting is 50°C.

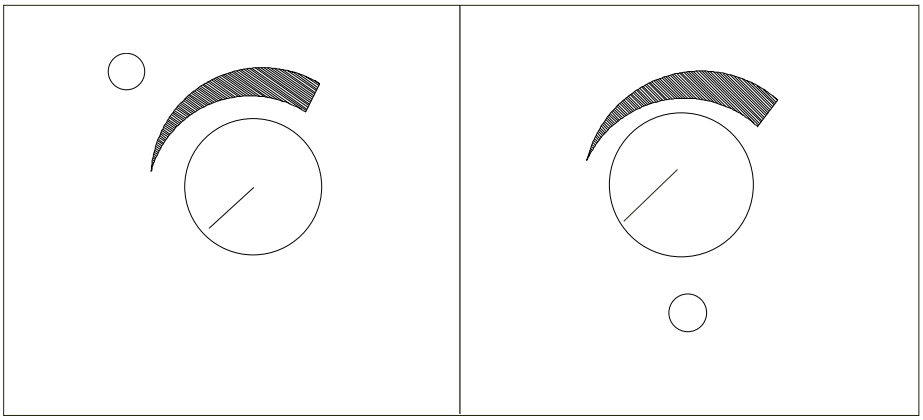

High Temperature/Low Liquid Level Safety (Typical)

15-Pin Accessory Connector

Digital units are equipped with a 15 pin D-subminiature female receptacle on the right side of the power box. An ENABLE/DISABLE switch is located just below the receptacle. Place the switch to the ENABLE position to control the bath via the receptacle connection. (The sensor temperature and setpoint, pin 7 and 8, can be read with the switch in either position.) The pin-out information is listed below.

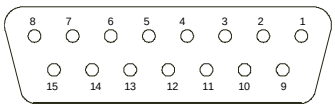

15 pin D-subminiature female receptacle

Pin #	Function
1	Chassis ground.
2	No connection.
3	Span +. Indicates the maximum setpoint value the unit can be set to operate. The temperature scale is 10mV/°C, referenced to analog ground, pin 6 (example: +350mV = +35.0°C).
4	Span -. Indicates the minimum setpoint value the unit can be set to operate. The temperature scale is 10mV/°C, referenced to analog ground, pin 6 (example: +50mV = +5.0°C).
5	No connection.
6	Analog ground. The analog ground is physically separated from the power ground throughout the unit. To prevent offsets that result from ground currents, the analog and power grounds are only connected at the unit's power supply. Analog ground should only be used as a reference pin.
7	Sensor temperature (current limited through 2.7K OHM resistor). The fluid temperature, as measured by the controller's sensor located in the reservoir, can be read at this pin. The temperature scale is 10mV/°C, referenced to analog ground, pin 6 (example: +150mV = +15.0°C).
8	Setpoint out. The present temperature setpoint can be read at this pin. The temperature scale is 10mV/°C, referenced to analog ground, pin 6 (example: +150mV =+15.0°C).
9	Power Ground.
10	No connection.
11	No connection.
12	Digital display (input only). An external voltage can be displayed on the operator panel digital display by applying the voltage to this pin. The display has a low input resistance and a full scale rating of ±1.99VDC. Input is referenced to analog ground, pin 6. The maximum voltage applied to the display should be limited to ±2VDC.
13	- 5V. Power supply of -5VDC (15mA maximum).
14	+5V. Power supply of +5VDC (50mA maximum).
15	Setpoint in. The temperature setpoint can be controlled by applying a known voltage to this pin. The temperature scale is 10mV/°C, referenced to analog ground, pin 6 (example: +230mV = +23.0°C).

NOTE: With the switch in the ENABLE position and no input to pin 15, the bath will slowly go to the setpoint value set on the digital controller.

Section V Maintenance



To avoid electrical shock, disconnect the mains cord prior to removing any access panels or covers.

Service Contracts

Thermo NESLAB offers on-site Service Contracts that are designed to provide extended life and minimal down-time for your unit. For more information, contact our Service Department (see Preface, After-sale Support).

Condenser

For proper operation, the unit needs to pull substantial amounts of air through a condenser. A build up of dust or debris on the fins of the condenser will lead to a loss of cooling capacity.

Periodic vacuuming of the condenser is necessary. To access the condenser the front grille must be removed.



The unit must be turned off before the front panel is removed.

All units have a two piece grille assembly. First remove the left (blue-colored) section by simply pulling it forward. Pull forward on the remaining (white-colored) section to remove it.

The frequency of cleaning depends on the operating environment. After initial installation, we recommend a monthly visual inspection of the condenser. After several months, the frequency of cleaning will be established.

Reservoir Cleaning

Routine cleaning can be achieved by simply sponging down the seamless stainless steel tank with tap water. (Dish washing detergent may be used but the tank must be thoroughly rinsed.)

To gain access to the entire reservoir the pump box and reservoir cover should be removed.

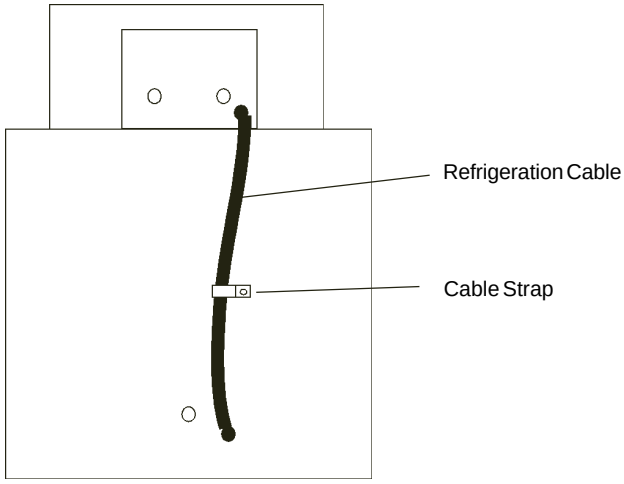

Remove the line cord from the rear of the unit and then remove the four screws (two on each side) securing the reservoir's cover.

To get slack on the refrigeration cable, remove the cable strap. The cable itself does not need to be disconnected.

Turn the cover assembly over and carefully place it on a supporting platform.

Algae

To restrict the growth of algae in the bath, we recommend the bath cover be kept in place and that all circulation lines be opaque. This will eliminate the entrance of light required for the growth of most common algae.

Thermo NESLAB recommends the use of Chloramine-T, 1 gram per 3.7 liters.

Section VI Troubleshooting

Checklist

Unit will not start

Make sure the voltage of the power source meets the specified voltage, ±10%. Refer to the serial number label on the rear of the unit to identify the specific electrical requirements of your unit.

Check the High Temperature/Low Liquid Level Safety. If the FAULT light is on, make sure the fluid level in the bath is between the marks in the baffle and the HIGH TEMP/LOW LEVEL SAFETY setting is greater than the fluid temperature. Push the RESET switch and attempt to restart.

Loss of cooling capacity

Check the position of the REFRIGERATION switch.

Be sure the cooling capacity of the unit has not been exceeded if circulating to an external system.

When the unit is shut off, wait approximately five minutes before restarting. This allows time for the refrigeration pressures to equalize. If the pressures are not allowed to equalize, the compressor will short-cycle (clicking sound) and no cooling will occur.

Proper ventilation is required for heat removal. Make sure ventilation through the front and rear panels is not impeded and the panels are free of dust and debris.

Ice build up on the cooling coils can act as insulation and lower the cooling capacity. Raise the temperature of the bath to de-ice the cooling coil and increase the concentration of non-freezing fluid.

No external circulation

Check for obstructions, kinks, or leaks in the circulation tubing.

Circulation will cease when the pump head has been exceeded.

Service Assistance and Technical Support

If, after following these troubleshooting steps, your unit fails to operate properly, contact our Customer Service Department for assistance (see Preface, After-sale Support). In addition to arranging warranty service, our Service Department can provide you with a wiring diagram and a complete list of spare parts for your unit. Before calling, please obtain the following:
Part number
Serial number
Voltage of unit
Voltage of power source

APPENDIX
NEScom SOFTWARE

The Thermo NESLAB Communications Software is a user friendly software that allows you to automate your temperature control process. The software includes a 3½" disk, Comprehensive Operator's Manual and a toll-free number to a trained technical staff.

NEScom Software allows you to write custom temperature programs for our Digital or Microprocessor based temperature control apparatus. Choose upper or lower temperature limits and monitor system status with an alarm. NEScom can also record your results on a user selectable graph. NesCom must be used with an IBM or 100% compatible computer.

Select from easy to use product icons.

Create graphs and charts.

Easily configure ramping functions which set the setpoint over time.

View pop-up alarm windows which display if an alarm condition occurred.

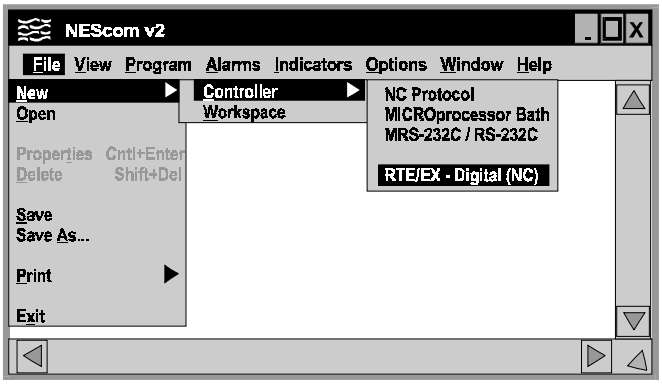

Select software functions from the easy to use pulldown menus.

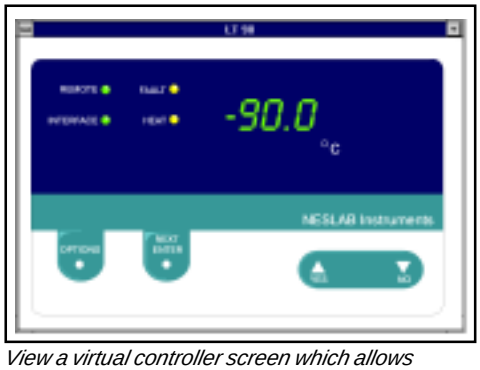

View a virtual controller screen which allows remote monitoring and operation of product control panel.

WARRANTY

Thermo NESLAB Instruments, Inc. warrants for 12 months from date of shipment any Thermo NESLAB unit according to the following terms.

Any part of the unit manufactured or supplied by Thermo NESLAB and found in the reasonable judgment of Thermo NESLAB to be defective in material or workmanship will be repaired at an authorized Thermo NESLAB Repair Depot without charge for parts or labor. The unit, including any defective part must be returned to an authorized Thermo NESLAB Repair Depot within the warranty period. The expense of returning the unit to the authorized Thermo NESLAB Repair Depot for warranty service will be paid for by the buyer. Thermo NESLAB's responsibility in respect to warranty claims is limited to performing the required repairs or replacements, and no claim of breach of warranty shall be cause for cancellation or recision of the contract of sales of any unit.With respect to units that qualify for field service repairs, Thermo NESLAB's responsibility is limited to the component parts necessary for the repair and the labor that is required on site to perform the repair. Any travel labor or mileage charges are the financial responsibility of the buyer.

The buyer shall be responsible for any evaluation or warranty service call (including labor charges) if no defects are found with the Thermo NESLAB product.

This warranty does not cover any unit that has been subject to misuse, neglect, or accident. This warranty does not apply to any damage to the unit that is the result of improper installation or maintenance, or to any unit that has been operated or maintained in any way contrary to the operating or maintenance instructions specified in Thermo NESLAB's Instruction and Operation Manual. This warranty does not cover any unit that has been altered or modified so as to change its intended use.

In addition, this warranty does not extend to repairs made by the use of parts, accessories, or fluids which are either incompatible with the unit or adversely affect its operation, performance, or durability.

Thermo NESLAB reserves the right to change or improve the design of any unit without assuming any obligation to modify any unit previously manufactured.

THE FOREGOING EXPRESS WARRANTY IS IN LIEU OF ALL OTHER WARRANTIES, EXPRESSED OR IMPLIED, INCLUDING BUT NOT LIMITED TO WARRANTIES OR MERCHANTABILITY AND FITNESS FOR A PARTICULAR PURPOSE.

Thermo NESLAB'S OBLIGATION UNDER THIS WARRANTY IS STRICTLY AND EXCLUSIVELY LIMITED TO THE REPAIR OR REPLACEMENT OF DEFECTIVE COMPONENT PARTS AND Thermo NESLAB DOES NOT ASSUME OR AUTHORIZE ANYONE TO ASSUME FOR IT ANY OTHER OBLIGATION.

Thermo NESLAB ASSUMES NO RESPONSIBILITY FOR INCIDENTAL, CONSEQUENTIAL, OR OTHER DAMAGES INCLUDING, BUT NOT LIMITED TO LOSS OR DAMAGE TO PROPERTY, LOSS OF PROFITS OR REVENUE, LOSS OF THE UNIT, LOSS OF TIME, OR INCONVENIENCE.

This warranty applies to units sold in the United States. Any units sold elsewhere are warranted by the affiliated marketing company of Thermo NESLAB Instruments, Inc. This warranty and all matters arising pursuant to it shall be governed by the law of the State of New Hampshire, United States. All legal actions brought in relation hereto shall be filed in the appropriate state or federal courts in New Hampshire, unless waived by Thermo NESLAB.

RTE-140
Refrigerated Bath/Circulator Digital Controller

NESLAB Manual P/N U00481
Rev. 07/07/00

Instruction and Operation Manual



RTE-140 Refrigerated Bath/Circulator

Table of Contents

PREFACE

Compliance 2
Unpacking 2
Warranty 2
After-sale Support 2

SECTION I
Safety

Warnings 3

SECTION II
General Information

Description 4
Specifications 4

SECTION III
Installation

Site 5
Electrical Requirements 5
Plumbing Requirements 6
Fluids 8
Filling Requirements 8
Water Quality Standards and Recommendations 9

SECTION IV
Temperature Controller

Start Up 10
Controller Keypad & Display 10
Changing a Value 11
Controller Displays 11
Operator's Loop 12
Setup Loop 13
Error Messages 15
Flow Control Valve (Optional) 15
Autorefill (Optional) 16
Sealable Bath Lid (Optional) 16
High Temperature/Low Liquid Level Safety 17
9-Pin Accessory Connectors 18
Analog Interface (Optional) 19

SECTION V
Maintenance

Service Contracts 20
Condenser 20
Reservoir Cleaning 21
Algae 21
Additional Loops 22
Calibration Loop 23
Calibration Procedure 23

SECTION VI
Troubleshooting

Checklist 25
Service Assistance and Technical Support 26

SECTION VII
Programming Software

NEScom Software/RS232 Communication 27

APPENDIX

Serial Communication Protocols

WARRANTY

Preface

Compliance

Products tested and found to be in compliance with the requirements defined in the EMC standards defined by 89/336/EEC as well as Low Voltage Directive (LVD) 73/23/EEC can be identified by the CE label on the rear of the unit. The testing has demonstrated compliance with the following directives:

LVD, 73/23/EEC	Complies with UL 3101-1:93
EMC, 89/336/EEC	EN 55011, Class A Verification EN 50082-1:1992 IEC 1000-4-2:1995 IEC 1000-4-3:1994 IEC 1000-4-4:1995

For any additional information refer to the Letter of Compliance that shipped with the unit (Declaration of Conformity).

Unpacking

Retain all cartons and packing material until the unit is operated and found to be in good condition. If the unit shows external or internal damage, or does not operate properly, contact the transportation company and file a damage claim. Under ICC regulations, this is your responsibility.

Warranty

Units have a warranty against defective parts and workmanship for one year from date of shipment. See back page for more details.

After-sale Support

NESLAB is committed to customer service both during and after the sale. If you have questions concerning the operation of your unit, contact our Sales Department. If your unit fails to operate properly, or if you have questions concerning spare parts or Service Contracts, contact our Customer Service Department. Before calling, please obtain the following information from the unit's serial number label:

- *BOM number* _____
- *Serial number*_____

Section I Safety

Warnings

Make sure you read and understand all instructions and safety precautions listed in this manual before installing or operating your unit. If you have any questions concerning the operation of your unit or the information in this manual, contact our Sales Department.

Performance of installation, operation, or maintenance procedures other than those described in this manual may result in a hazardous situation and may void the manufacturer's warranty.

Transport the unit with care. Sudden jolts or drops can damage the refrigeration lines. The units weigh approximately: RTE-111, 86 pounds (390 kilograms); RTE-211, 99 pounds (45 kilograms); RTE-221, 106 pounds (48 kilograms). Units should be transported with equipment designed to lift these weights.

Observe all warning labels.

Never remove warning labels.

Never operate damaged or leaking equipment.

Never operate the unit without bath fluid in the bath.

Never use pure ethylene glycol as a bath fluid. Above 80°C the user is responsible for the fluid used.

For 220 - 240 volt units supplied without a line cord, use a harmonized (HAR) grounded 3-conductor cord, type H 0 5 V V - F , with conductors listed below. A suitable cord end is required for connecting to the equipment (see unit socket) and must terminate with an IEC approved plug for proper connection to power supply.

Example: **Nominal 1.0 mm^2 cross section rated 10 Amps**
Unit Socket: IEC - 320 C13

Always turn off the unit and disconnect the line cord from the power source before performing any service or maintenance procedures, or before moving the unit.

Always empty the bath before moving the unit.

Never operate equipment with damaged line cords.

Refer service and repairs to a qualified technician.

In addition to the safety warnings listed above, warnings are posted throughout the manual. These warnings are designated by an exclamation mark inside an equilateral triangle with text highlighted in bold print. Read and follow these important instructions. Failure to observe these instructions can result in permanent damage to the unit, significant property damage, personal injury or death.

Section II General Information

Description

The RTE-140 Refrigerated Bath/Circulator is designed to provide temperature control for applications requiring a fluid work area or pumping to an external system.

Units consist of a non-CFC air-cooled refrigeration system, circulation pump, seamless stainless steel bath, work area cover, and a temperature controller.

Specifications

Temperature Range	-40°C to +150°C
Temperature Stability[1,2,3]	±0.05°C
Cooling Capacity[4] *Watts* *BTU/H*	 500 @ 0°C 1705 @ 0°C
Pump Capacity[1]	15 lpm at 0' (0 M) 0 lpm at 16' (4.9 M)
Heater (Watts) *60 Hz Models* *50 Hz Models*	 800 1000
Refrigerant	R-404A
Bath Work Area *Inches (L x W x D)* *Centimeters (L x W x D)*	 4 3/4 x 8 x 5 12.1 x 20.3 x 12.7
Bath Volume[5] *Liters*	 7.2
Case Dimensions[6] *Inches (H x W x D)* *Centimeters (H x W x D)*	 26 x 12 3/8 x 18 3/8 66.0 x 31.4 x 46.7
Power Requirements[7]	115 V, 60 Hz 220 V, 50 Hz
Shipping Weight *Pounds* *Kilograms*	 99 45

1. Specifications listed for units operating at +20°C (+70°F) ambient. Pumping specification determined using bath fluid with specific gravity of 1.0, other specifications determined using a bath fluid with specific heat of 0.5.
2. For operation below 0°C, covering the bath work area may improve stability.
3. For some applications, agitation and stability above ambient temperatures may be improved by connecting a small length of hose between the pump inlet and outlet connections on the rear of the unit.
4. 50 Hz units have a 375 watt cooling capacity.
5. Operational volume. Maximum volume is 8.1 liters.
6. Add 1½ inches (3.8 centimeters) to depth for plumbing connections.
7. Control transformer fusing - 115VAC units = 500mA 250V to 5 x 20mm (Qty 1), 220VAC units = 250mA 250V to 5 x 20mm (Qty 2).
   Bussman fusing part numbers: 500mA fuse = Bussman S504-500mA
   250mA fuse = Bussman S504-250mA

Section III Installation

Site

The indentations on the unit's sides are designed to function as handles. Lift the unit by the handles and locate it on a sturdy work area. For unit reliability, ambient temperatures should be inside the range of +50°F to +86°F (+10°C to +30°C). The unit can be safely operated in ambient temperatures up to 104°F (40°C).



Never place the unit in a location where excessive heat, moisture, or corrosive materials are present.

The unit has an air-cooled refrigeration system. Air is drawn through the front panel and discharged through the rear panel. The unit must be positioned so the air intake and discharge are not impeded. A minimum clearance of 12 inches (30 centimeters) at the front and rear of the unit is necessary for adequate ventilation. Inadequate ventilation will reduce cooling capacity and, in extreme cases, can cause compressor failure.

Excessively dusty areas should be avoided and a periodic cleaning schedule should be instituted (see Section VI, Cleaning).

The unit will retain its full rated capacity in ambient temperatures up to approximately +68°F (+20°C). Above +68°F, reduce the cooling capacity 1% for every 1°F above +68°F, to a maximum ambient temperature of +104°F. In terms of Celsius, reduce the cooling capacity 1% for every 0.5°C above +20°C, to a maximum ambient temperature of +40°C.

Electrical Requirements



Line voltage may be easily accessible inside the pump/control box. Always unplug the unit prior to removing pump/control box cover.

Refer to the serial number label on the rear of the unit to identify the specific electrical requirements of your unit.

Ensure the voltage of the power source meets the specified voltage, ±10%.

The unit construction provides extra protection against the risk of electric shock by grounding appropriate metal parts. The extra protection may not function unless the power cord is connected to a properly grounded outlet. It is the user's responsibility to assure a proper ground connection is provided.



For 220 - 240 volt units supplied without a line cord, use a harmonized (HAR) grounded 3-conductor cord, type H 0 5 V V - F , with conductors listed below. A suitable cord end is required for connecting to the equipment (see unit socket) and must terminate with an IEC approved plug for proper connection to power supply.

Example: **Nominal 1.0 mm² cross section rated 10 Amps**
Unit Socket: IEC - 320 C13

Plumbing Requirements



Ensure the unit is off before connecting tubing to the unit.

To prevent damage to the plumbing lines, always support the ¾" fittings while installing/removing the pumping caps and lines.

Hose Connections
The pump connections are located at the rear of the pump box and are labelled PUMP INLET and PUMP OUTLET. These connections are bent upward so the recirculating fluid will drain back into the reservoir when the hoses are disconnected. Both connections are capped with stainless steel serrated plugs.

The pump lines have ¼" male pipe threads for mating with standard plumbing fittings. For your convenience two stainless steel adapters, ¼" female pipe thread to ⅜ " O.D. serrated fitting, are provided. (To assure proper fit, they should be installed using Teflon® tape around the threads.)

Flexible tubing, if used, should be of heavy wall or reinforced construction. Make sure all tubing connections are securely clamped. Avoid running tubing near radiators, hot water pipes, etc. If substantial lengths of tubing are necessary, insulation may be required to prevent loss of cooling capacity.

Tubing and insulation are available from NESLAB. Contact our Sales Department for more information (see Preface, After-sale Support).

It is important to keep the distance between the unit and the external system as short as possible, and to use the largest diameter tubing practical. Tubing should be straight and without bends. If diameter reductions must be made, make them at the inlet and outlet of the external system, not at the unit.

If substantial lengths of cooling lines are required, they should be pre-filled with bath fluid before connecting them to the unit. This will ensure that an adequate amount of fluid will be in the bath once it is in operation.

Pumping
The pump is designed to deliver a flow of 15 liters/minute (4 gallons minute) at 0 feet head. To prevent external circulation, the PUMP INLET and PUMP OUTLET lines on the rear of the unit are capped. The caps must be removed when external circulation is required.

To properly secure external hose connections to the unit, wrap Teflon® tape around the pipe line threads before installation. Once the hose connections are made, the hoses must be properly plumbed to an external system. *It is important the bath is not in operation until all plumbing is complete.*

NOTE: To increase agitation in the bath when not circulating externally, connect a short loop of hose between the inlet and outlet lines.

If the bath is not used for external circulation, make sure the stainless steel caps are in place prior to operating the bath.

Circulating to an open container

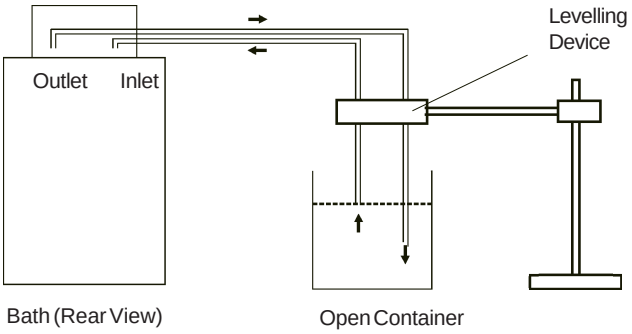

A stainless steel leveling device is available to aid circulation to an open vessel. Contact our Sales Department for more information (see Preface).

Support the leveling device over the open container with a ringstand. Staggerthe tubes in the leveling device so one tube is submerged in the vessel fluid, and the other tube is level with the fluid surface. Connect the deeper tube to the PUMP OUTLET and the shorter tube to the PUMP INLET.

Adjust the flow rate using the accessory flow control valve connected to the PUMP OUTLET, or by partially restricting the outlet tubing. When properly adjusted, the pump inlet will draw an occasional air bubble to prevent over flow, and the pump outlet will force fluid through the submerged tube to prevent aeration of the vessel.

To avoid siphoning the bath work area when the unit is shut off, lift the leveling device out of the vessel and above the level of the unit.

Circulating through two closed-loops

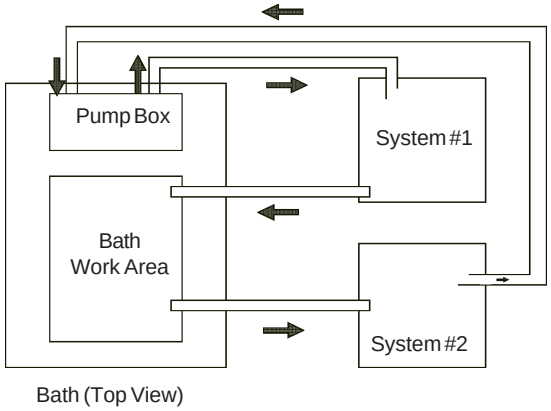

The pump can be used to circulate through two closed-loop systems. Connect the shortest practical length of flexible tubing from the PUMP OUTLET to the inlet of external system #1. Connect the outlet of system #1 directly into the bath work area. Connect tubing from the bath work area to the inlet of system #2. Connect the outlet of system #2 to the PUMP INLET.

Drain



Ensure the temperature of the bath fluid is safe before draining the unit.

The unit is equipped with a drain located at the back of the unit at the base of the bath. The drain has ¼" MPT and is capped with a stainless steel plug. To drain the reservoir simply remove the cap.

To assure proper fit when replacing the cap, be sure to line the threads with 1½ turns of Teflon® tape.

Fluids



Never use flammable or corrosive fluids with this unit.

The selected fluid must have a viscosity of 50 centistokes or less at the lowest operating temperature.

Filtered tap water is the recommended fluid for operation from +8°C to +80°C. See Water Quality Standards and Recommendation on the next page.

For operation from -30°C to +8°C, a 50/50 mixture, by volume, of tap water and laboratory grade ethylene glycol is suggested.

Above +80°C and below -30°C, the user is responsible for fluids used.



Never use pure ethylene glycol as a bath fluid. Above 80°C the user is responsible for the fluid used. A minimum 80/20 mixture of laboratory grade ethylene glycol and filtered tap water is allowed.

Filling Requirements

The bath work area has a high and low level marker to guide filling. The markers are 1 inch horizontal slits located in the center of the stainless steel baffle separating the work area and the pump assembly. The correct fluid level falls between these two markers. The heating and cooling coils will be exposed and may become damaged if the correct fluid level is not provided.

When pumping to an external system, keep extra fluid on hand to maintain the proper level in both the circulating lines and the external system.



Never run the unit when the work area is empty. Avoid overfilling. Overfilling the bath may damage the insulation and affects stability as well as low-end performance.

Water Quality Standards and Recommendations

	Permissible (PPM)	Desirable (PPM)
Microbiologicals		
(algae, bacteria, fungi)	0	0
Inorganic Chemicals		
Calcium	<40	0.6
Chloride	250	<25
Copper	1.3	1.0
Iron	0.3	<0.1
Lead	0.015	0
Magnesium	<12	0.1
Manganese	0.05	<0.03
Nitrates\Nitrites	10 as N	0
Potassium	<20	0.3
Silicate	25	<1.0
Sodium	<20	0.3
Sulfate	250	<50
Hardness	17	<0.05
Total Dissolved Solids	50	10
Other Parameters		
pH	6.5-8.5	7-8
Resistivity	0.01*	0.05-0.1*

* Megohm-Cm (Compensated to 25°C)

Unfavorably high total ionized solids (TIS) can accelerate the rate of galvanic corrosion. These contaminants can function as electrolytes which increase the potential for galvanic cell corrosion and lead to localized corrosion; such as pitting which can be observed at the studs and on the outside surface of cooling coils. Eventually, the pitting will become so extensive that the coil will leak refrigerant into the water reservoir.

For example, raw water in the U.S. averages 171 ppm (of NaCl). The recommended level for use in a water system is between 0.5 to 5.0 ppm (of NaCl).

Recommendation: Initially fill the tank with distilled/deionized water. Do not use untreated tap water as the total ionized solids level may be too high.

Maintain this water quality at a resistivity of between 1 to 10 megohm-cm (compensated to 25°C) by using a purification system. Although the initial fill may be as high as 10 megohm-cm (compensated to 25°C), the desired level for long time usage is 1 to 3 megohm-cm (compensated to 25°C).

The above two recommendations will reduce the electrolytic potential of the water and prevent or reduce the galvanic corrosion observed.

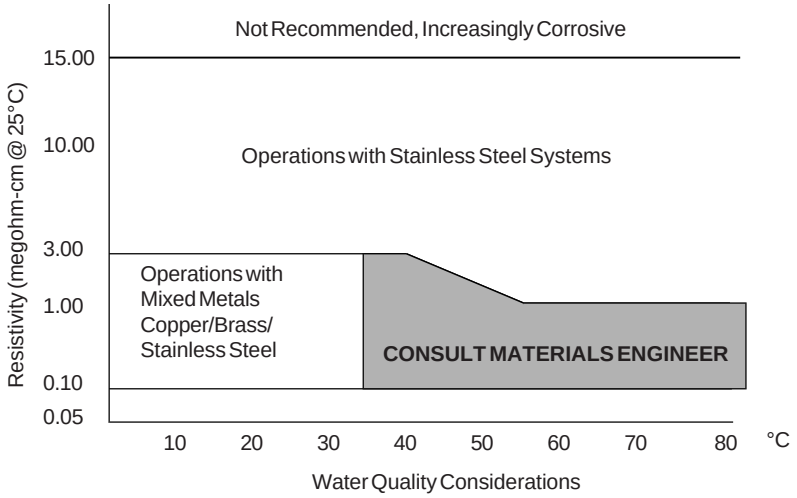

Section IV Temperature Controller

Start Up

Before starting the unit, check all electrical and plumbing connections and make sure the work area has been properly filled with bath fluid.

To start the bath place the I/O circuit breaker on the side of the control box to the **I** (power on) position. The pump will start and the controller will display the temperature of the fluid in the reservoir.

The digital controller controls temperature using a PID (Proportional-Integral-Derivative) algorithm. It is designed with self-diagnostic features and easy to use operator interface.

Controller Keypad & Display

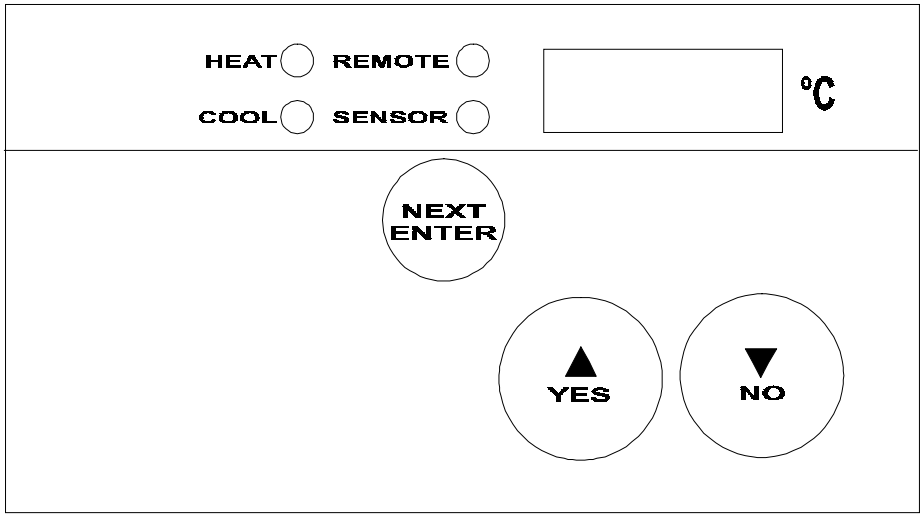

The controller's HEAT and COOL indicators show the status of the refrigeration system and heater. The HEAT indicator is lit when the heater is on. The HEAT indicator flashes when the heater is pulsating. The COOL indicator is lit when the refrigeration system is removing heat from the cooling fluid. A balance between COOL and HEAT controls the temperature.

NOTE: Below 40°C the refrigeration system is on unless the setpoint is more than 2°C above the bath temperature. This allows for rapid heat up.

The REMOTE indicator illuminates whenever the unit is configured to accept a remote setpoint. The controller's SENSOR indicator illuminates whenever the optional external sensor is selected. See Controller Displays on the next page for information on the °C display.

NEXT ENTER
Use this key to scroll forward through the menus and also to accept and save changes.

YES, ▲
This dual purpose key is used to answer Yes to Y/N questions or to increment numerical values upward for setting numeric values.

NO, ▼
This dual purpose key is used to answer No to Y/N questions or to decrement numerical values downward for setting numeric values.

Changing a Value

The **YES** key increments the value. The **NO** key decrements the value.

The display will flash as soon as either key is depressed, and will continue to flash until the **NEXT ENTER** key is pressed twice to accept the new value.

The new value will not be used by the controller until the **NEXT ENTER** key is depressed twice and the display stops flashing.

NOTE: If the **ENTER** key is not depressed twice within three minutes, the controller will time out and the new value will not be accepted. The controller will revert to the previous value.

The controller will not allow you to enter a value above the maximum (+150°C) or below the minimum (-40°C).

Controller Displays

An alphanumeric display presents numeric readings of various operating conditions within the bath. Display function is selected by pressing the appropriate keys to move through a menu of available information.

When the controller is first powered up it performs a quick self-test then enters the Operator's Loop. The Operator's Loop displays the bath temperature and is used to change the setpoint, see page 12. The Setup Loop can be accessed from the Operator's Loop by pressing and holding the key combinations shown on Figure 1 on the next page. The Setup Loop is used to adjust the controller's PID parameters, select either the internal or optional external sensor, and set the high/low temperature limits. It is also used to select RS232 parameters and display the unit's identification number. See pages 13-14.

Operator's Loop

When the controller is first powered up it enters the Operator's Loop, displaying reservoir fluid temperature. Press the NEXT ENTER key to view the setpoint.

SP displays the controller setpoint. The display will flash between SP and the actual setpoint number. Use the YES/NO keys to change the setpoint value. Once the desired setpoint is displayed, press the NEXT ENTER key twice.

NOTE: If the bath is controlled via RS232 communications, the setpoint can not be changed from the keypad.

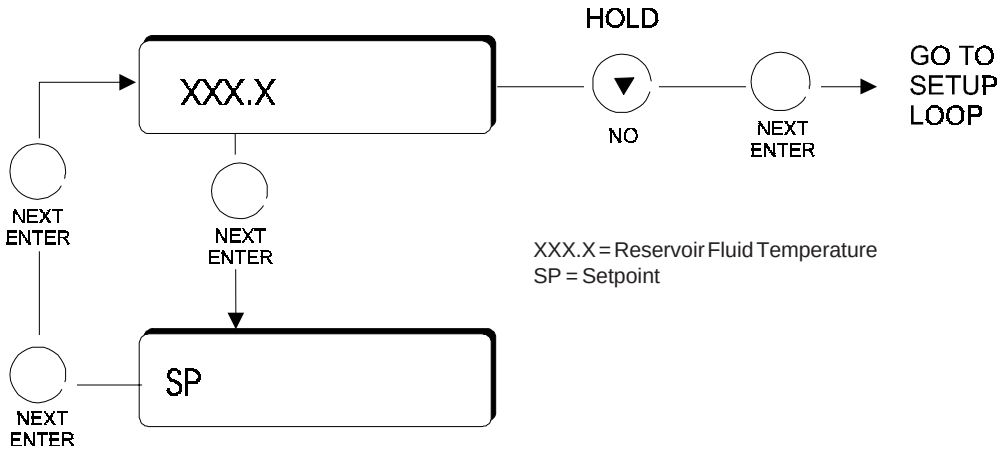

Figure 1 Operator's Loop

Setup Loop

The Setup Loop is used to adjust the controller's PID parameters; select either the internal (1) or optional external (2) sensor; set the high/low temperature limits; adjust RS232 parameters; and display/alter the unit's ID number.

Enter the Setup Loop from the Operator's Loop by pressing and holding the NO key, then press the NEXT ENTER key. Use the YES/NO keys to adjust the values. Press the NEXT ENTER key twice to accept the new value. Press the NEXT ENTER key only once if the value did not change.

While in the Setup Loop, if a key is not pressed during a one-minute time span, the controller will automatically return to the Operator's Loop.

NOTE: If the unit exceeds either temperature limit, the appropriate error message will flash, see page 15. The unit will not shut down (unless the temperature also exceeds the high temperature safety setting, see page 17). You will also receive an error code if the optional external sensor is selected but it is not installed.

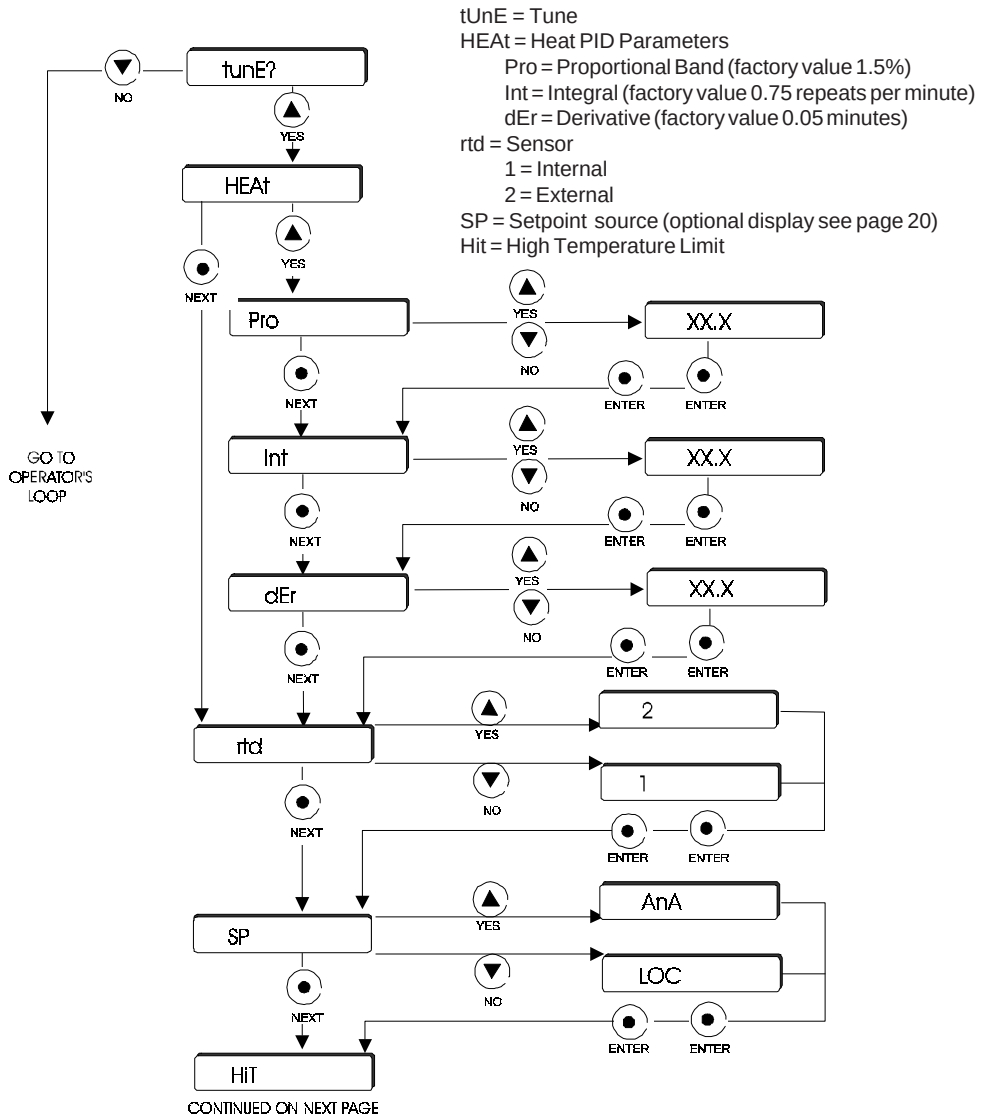

Figure 2 Setup Loop (1 of 2)

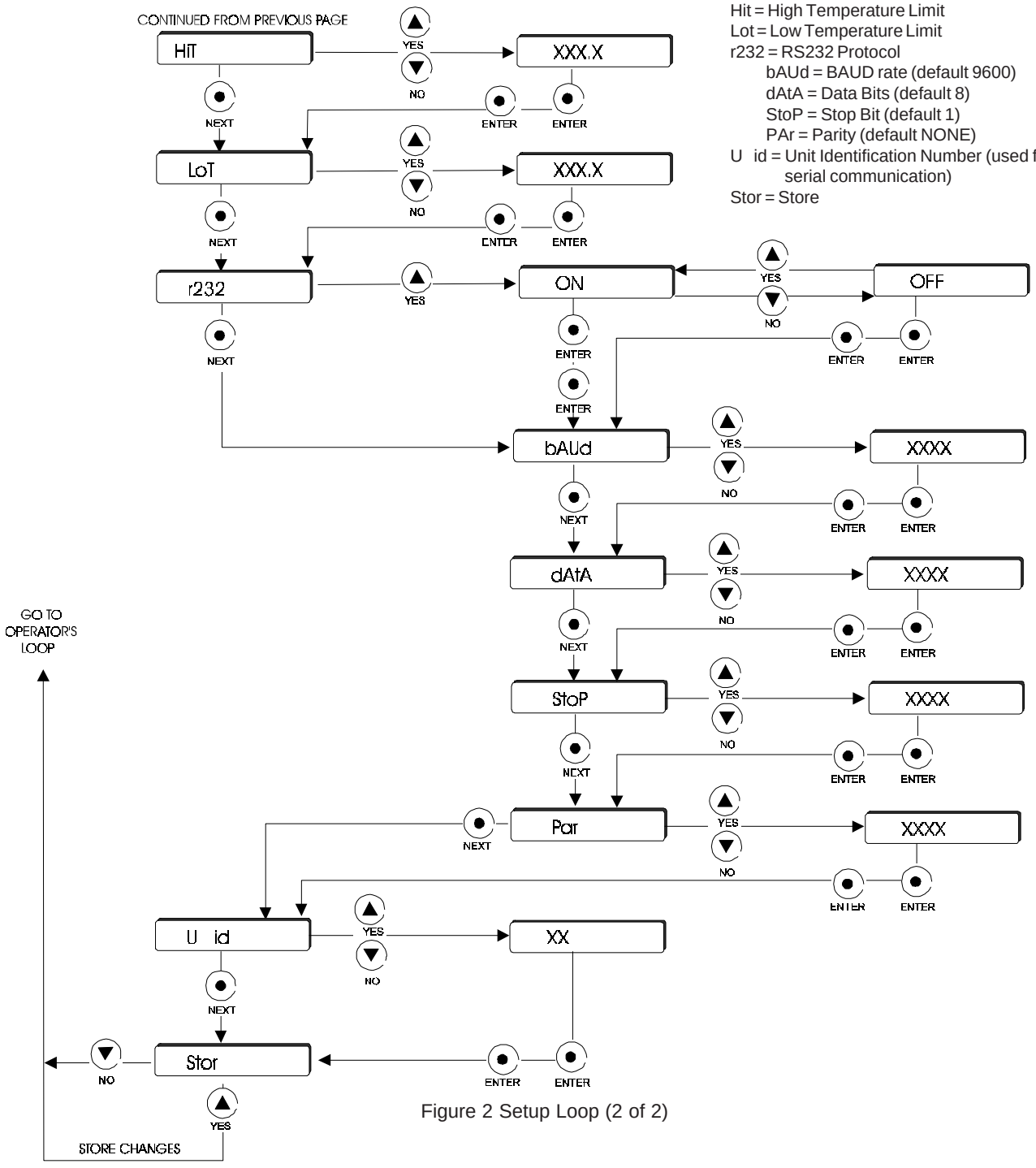

Figure 2 Setup Loop (2 of 2)

NOTE: To save *all* changes, when the display reads **Stor** press **YES**. Should you desire to return to the temperature display and abort *all* changes, when the display reads **Stor** press **NO.**

Error Messages

Error	Action
Er00:	ROM Checksum
Er01:	RAM Test Failed
Er02:	Keypad Test Failed
Er04-13:	Interrupt Error
Er14:	Synchronous Error
Er15:	Asychronous Error
Er16:	Bad Calibration
LoT:	Low Temp Limit
HiT:	High Temp Limit
Er23:	RTD2 Shorted
Er24:	RTD2 Open/Not Installed
Er25:	RTD1 Shorted
Er26:	RTD1 Open
HTC:	High Temperature Cutout
PrES:	Pressure Cutout

NOTE: HTC and PrES are optional displays available only on specially modified units. Errors 00 through 15 will lockup the controller keypad. Errors 00 through 03 may be cleared by depressing the NEXT ENTER key.

Flow Control Valve (Optional)

An optional flow control valve is available to control external circulation. The valve assembly consists of the nine pieces shown below. Once assembled and installed on the unit, clamp a hose to the end of the assembly. Turn the unit on and check for leaks with the valve opened as well as closed.

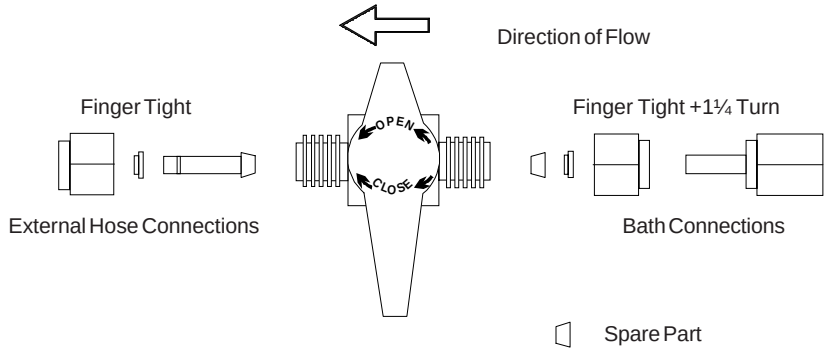

Autorefill (Optional)

The autorefill device is designed to maintain the correct level of fluid in the reservoir. The device consists of a float switch and a solenoid valve. If the fluid level falls, the float switch opens the solenoid valve allowing makeup fluid to fill the reservoir. Once the fluid reaches the proper level, the float switch rises and the solenoid valve closes.

The plumbing connection for the autorefill device, labeled WATER INLET, is located on the rear of the autorefill assembly. The connection is $^{3}/_{8}$" OD stainless steel. To prevent damage to your hosing and to prevent the hose from slipping of the connection, install the supplied hose barb into your tubing. Tubing is also available from NESLAB.

Remove the nut on the WATER INLET connection and install the tubing from your makeup fluid source. Reinstall the nut and tubing.

Install the device on the unit. To secure the device to the unit, tighten the screw located between the float switch and the makeup fluid outlet line. If desired, place the supplied cover on the unit.

The autorefill device requires its own source of electrical power. A connector for the supplied line cord is also located on the rear of the autorefill device. The connector is labelled POWER.

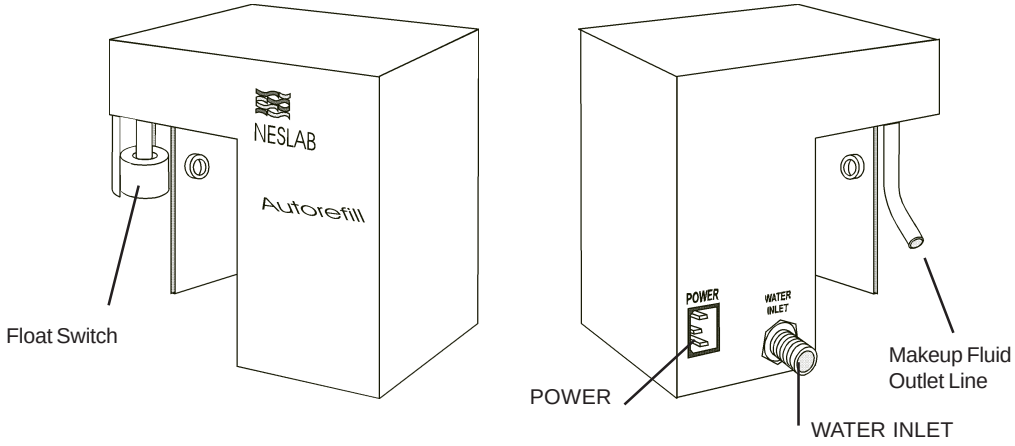

Sealable Bath Lid (Optional)

Depending on your application requirements and/or working environment, a bath lid is available to make the unit's reservoir sealable (not pressurized).

The top of the pump grate in the unit's reservoir has four holes cut into the sheet metal. Align the protrusions on the lid with these holes as shown. A locking adjustable grip latch tightens the lid to the tank top allowing an EDPM gasket to create a seal.

The lid also has a nitrogen purge port. The purge port is a ¼" male Swageloc connector with an o-ring seal.

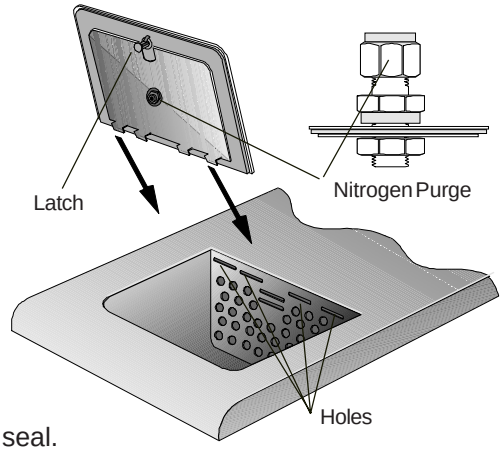

High Temperature/ Low Liquid Level Safety

To protect your application, the adjustable High Temperature/Low Liquid Level Safety (HIGH TEMP/LOW LEVEL) ensures the heater will not exceed temperatures that can cause serious damage to your unit. A single temperature sensor, located on the heater coils in the bath, monitors both conditions. A High Temperature/Low Liquid Level fault occurs when the temperature of the sensor exceeds the set temperature limit. The safety switch has a temperature range of 7°C to 180°C.

In the event of a fault, the red LED near the adjustment dial will light, the display will go blank, and the unit will shut down. The cause of the fault must be identified and corrected before the unit can be restarted.

The safety is not preset and must be adjusted during initial installation.

To set the safety, locate the HIGH TEMP/LOW LEVEL SAFETY adjustment dial on the right side of the pump box. Turn the dial fully clockwise and turn the I/O switch off then back on.

Start the unit. Adjust the setpoint for a few degrees higher than the highest desired fluid temperature and allow the bath to stabilize at the temperature setpoint. Turn the HIGH TEMP/LOW LEVEL SAFETY dial counterclockwise until you hear a click and the unit shuts down. The red LED near the adjustment dial will light to indicate a fault has occurred.

Cool the bath and then, without moving the adjustment dial, turn the I/O switch off then back on.

NOTE: NESLAB recommends rechecking operation if the unit is moved.

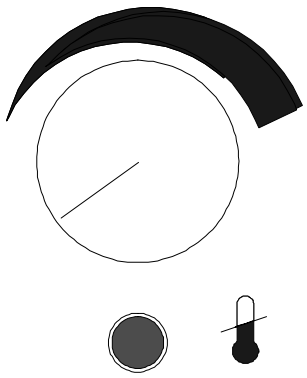

High Temperature/Low Liquid Level Safety

9-Pin Accessory Connector

The unit is equipped with two 9-pin D-connectors located on the rear of the control box. The female COMM is used for RS232 communication (see Appendix A); the male is used with an optional remote sensor.



COMM Pin Connections

Pin #	Function
1	No connection.
2	TX = Transmitted data from controller
3	RX = Received data to controller
4	No connection
5	GND = Signal ground
6	No connection.
7	No connection
8	No connection
9	No connection

Hardware	Internal Connector	Mating Connector
	AMP Part# 745491-2	**AMP Part# 745492-2**

Remote Sensor Connections

Pin #	Function
1	3-wire RTD connection A
2	No connection
3	No connection
4	3-wire RTD connection A
5	No connection
6	No connection.
7	3-wire RTD connection B
8	No connection
9	No connection

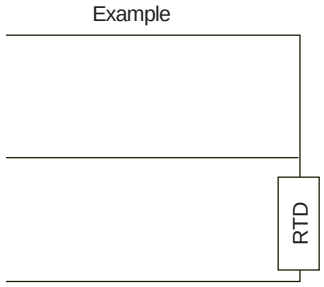

Hardware	Internal Connector	Mating Connector
	AMP Part# 745492-2	**AMP Part# 745491-2**

Analog Interface (Optional)

An optional 15-pin D subminiature female receptacle for analog interface is located on the rear of the control/pump box.

Pin #	Function
1	Chassis ground.
2	No connection.
3 - 5	No connection.
6	Analog Ground. The analog ground is physically separated from the power ground throughout the unit. To prevent offsets that result from ground currents, the analog and power grounds are only connected at the unit's power supply. Analog ground should only be used as a reference pin.
7	Temperature Out. The fluid temperature, as measured by the controller's sensor located in the reservoir, can be read at this pin. The temperature scale is 10mV/°C, referenced to analog ground, pin 6 (example: +150mV = +15.0°C).
8	No connection.
9	Power Ground (5V RTN).
10 - 13	No connection.
14	+5V. Power supply of +5VDC (15mA maximum).
15	Setpoint In. The temperature setpoint can be controlled by applying a known voltage to this pin. The temperature scale is 10mV/°C, referenced to analog ground, pin 6 (example: +230mV = +23.0°C). **Note**: The setpoint is updated only when the voltage represents a temperature within the setpoint limits.

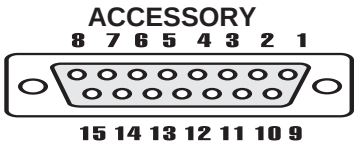

15 pin D-subminiature female receptacle

The analog setpoint signal (Setpoint In) is enabled using the unit's software. Using the Setup Loop discussed on page 13, keep depressing the NEXT ENTER key until SP is displayed. Use the YES or NO key to display the desired mode, AnA for analog or LoC for local, then press NEXT ENTER to continue with the loop. **NOTE:** The last value entered is maintained when SP is changed from AnA to LOC or LOC to AnA. Store the change.

The Analog In and Analog Out discussed in the Calibration Loop on page 24 is applicable to this unit. Analog In calibration is done by applying a 2Vdc signal for AiH, and a 0Vdc signal for AiL. Reference the appropriate pins on the ACCESSORY connector.

Analog Out calibration is done by measuring the appropriate pins on the ACCESSORY connector. Adjust the AoH to 1.000Vdc using the YES and NO keys then press ENTER twice. Adjust the AoL to 0.000Vdc using the YES and NO keys then press ENTER twice.

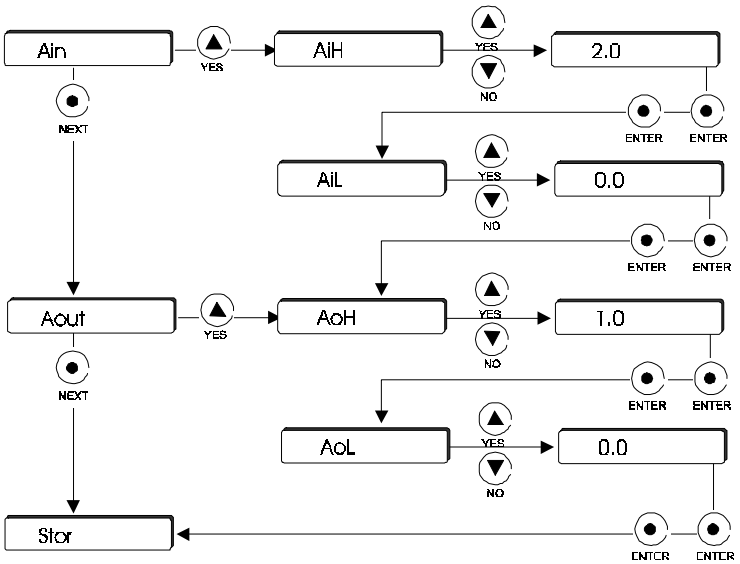

Section V Maintenance



To avoid electrical shock, disconnect the mains cord prior to removing any access panels or covers.

Service Contracts

NESLAB offers on-site Service Contracts that are designed to provide extended life and minimal down-time for your unit. For more information, contact our Service Department (see Preface, After-sale Support).

Condenser

For proper operation, the unit needs to pull substantial amounts of air through a condenser. A build up of dust or debris on the fins of the condenser will lead to a loss of cooling capacity.

Periodic vacuuming of the condenser is necessary. To access the condenser the front grille must be removed.



The unit must be turned off before the front panel is removed.

The unit has a two piece grille assembly. First remove the left (blue-colored) section by simply pulling it forward. Pull forward on the remaining (white-colored) section to remove it.

The frequency of cleaning depends on the operating environment. After initial installation, we recommend a monthly visual inspection of the condenser. After several months, the frequency of cleaning will be established.

Reservoir Cleaning

Routine cleaning can be achieved by simply sponging down the seamless stainless steel tank with tap water. (Dish washing detergent may be used but the tank must be thoroughly rinsed.)

To gain access to the entire reservoir the pump box and reservoir cover should be removed.

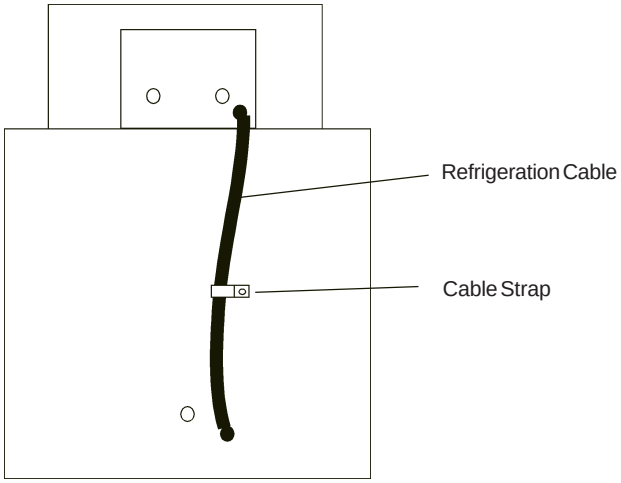

Remove the line cord from the rear of the unit and then remove the four screws (two on each side) securing the reservoir's cover.

To get slack on the refrigeration cable, remove the cable strap. The cable itself does not need to be disconnected.

Turn the cover assembly over and carefully place it on a supporting platform.

Algae

To restrict the growth of algae in the bath, we recommend the bath cover be kept in place and that all circulation lines be opaque. This will eliminate the entrance of light required for the growth of most common algae.

NESLAB recommends the use of Chloramine-T, 1 gram per 3½ liters.

Additional Loops

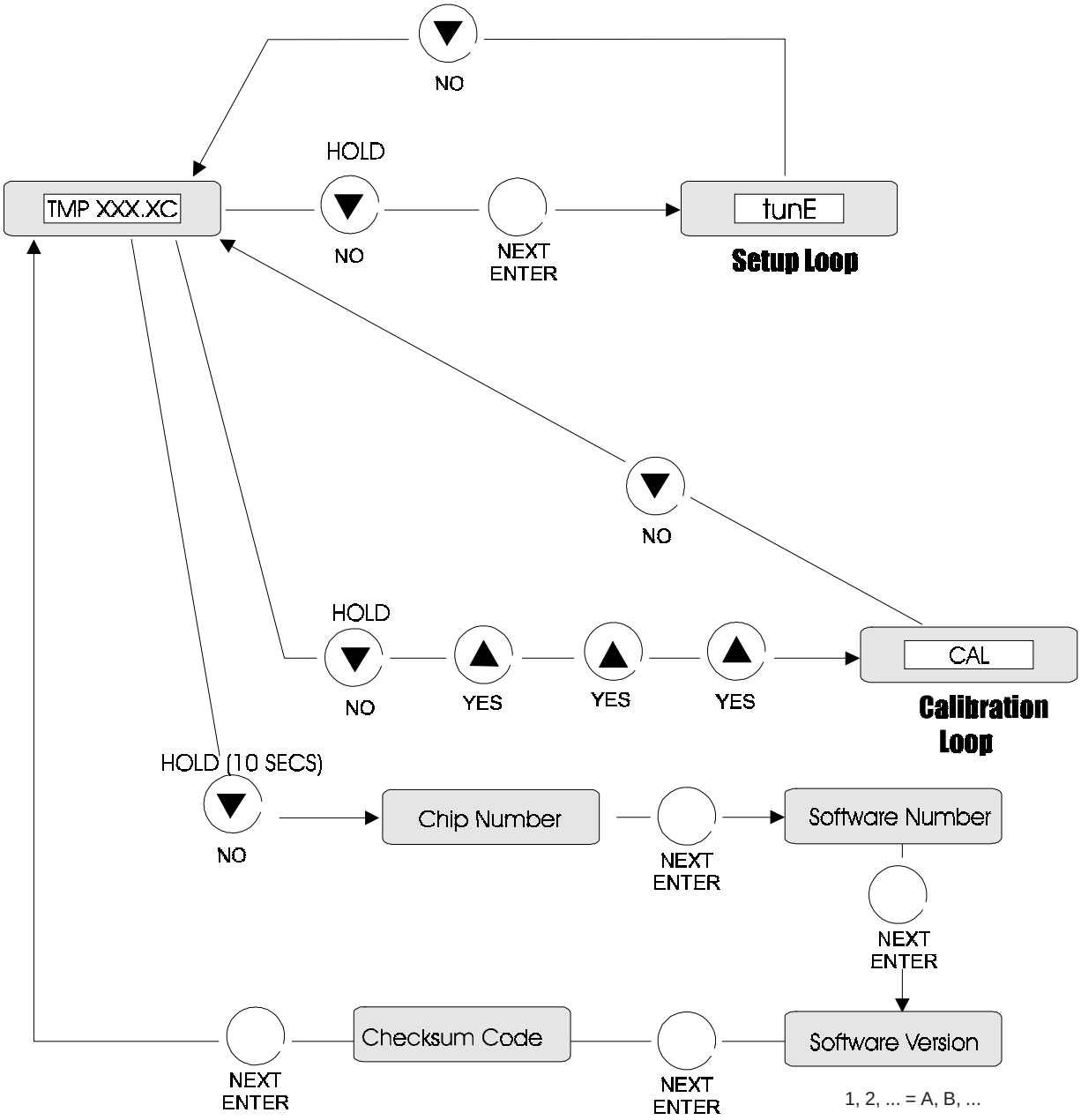

Figure 3 Additional Loops

Calibration Loop

The Calibration Loop is used to calibrate the RTD high and low temperature. The controller's internal temperature sensor is factory calibrated. We recommend calibrating any external sensor.

Enter the Calibration Loop from the Operator's Loop by pressing and holding the NO key while pressing the YES key three times.

Calibration Procedure

Install a calibrated reference thermometer in the bath. (For external mode, also install the sensor in the bath.) Place the cover on the unit.

The procedure uses the Operator's, Setup and Calibration Loops. In the Setup Loop place the unit in either the internal or external RTD mode of operation (RTD1 = Internal , RTD2 = External). Return to the Operator's Loop and adjust the setpoint to an appropriate high-end temperature.

NOTE: When calibrating the external sensor ensure the controller's SENSOR indicator is illuminated.

Once the bath reaches the setpoint and stabilizes, go to the Calibration Loop and, as illustrated on the next page, enter the actual reference thermometer reading at either the r1H or r2H prompt.

Store the change and return to the Operator's Loop. Adjust the setpoint to an appropriate low-end temperature. Once the bath reaches the setpoint and stabilizes, return to the Calibration Loop and enter the reference thermometer reading at either the r1L or r2L prompt. Store the change.



Do not pick points that are outside the safe operating limits of the fluid in your application. For example with a water bath, 90°C and 5°C would be typical calibration points.

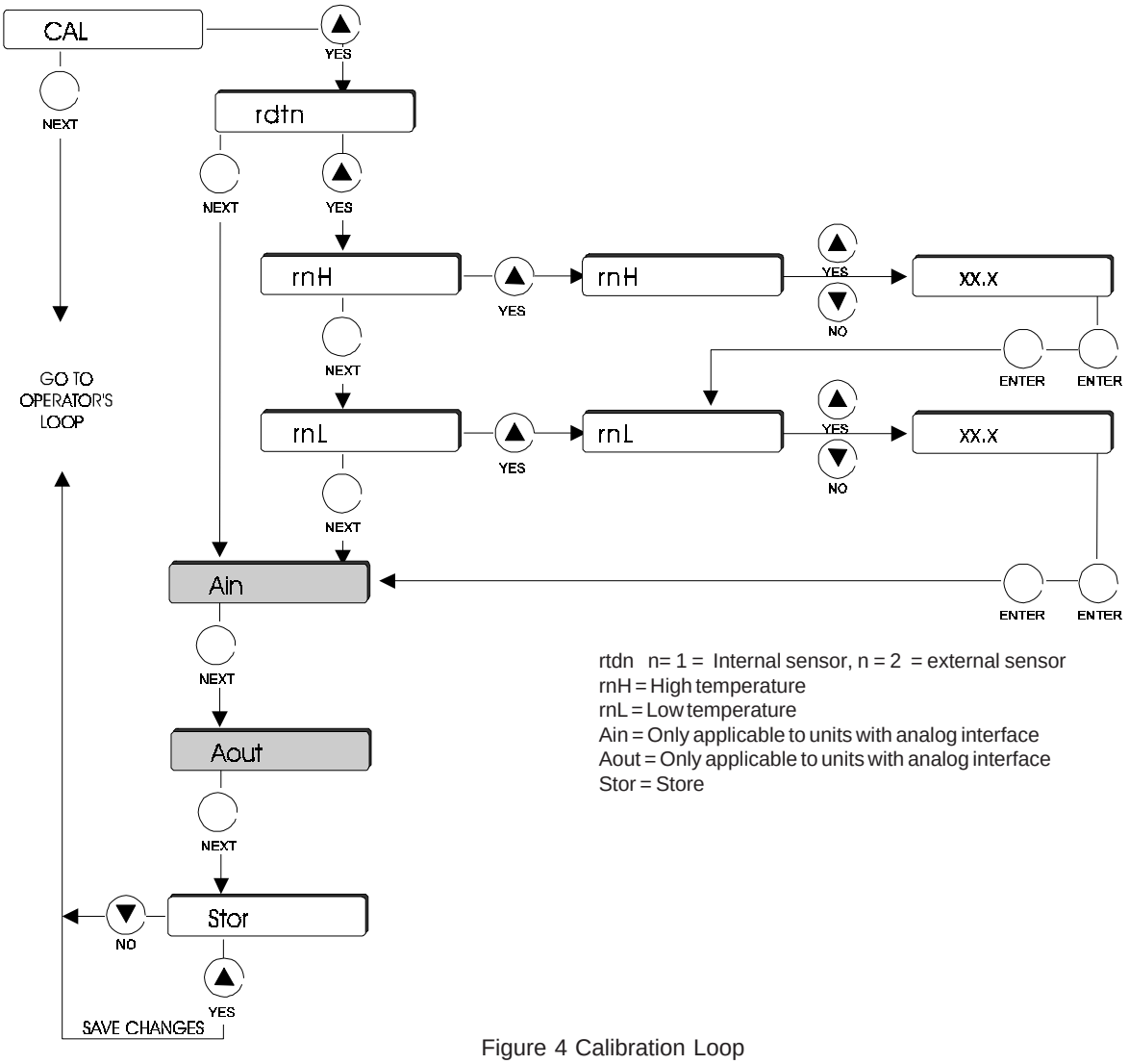

Figure 4 Calibration Loop

NOTE: To save *all* changes, when the display reads **Stor** press **YES**. Should you desire to return to the temperature display and abort *all* changes, when the display reads **Stor** press **NO.**

Section VI Troubleshooting

Checklist

Unit will not start

Make sure the voltage of the power source meets the specified voltage, ±10%. Refer to the serial number label on the rear of the unit to identify the specific electrical requirements of your unit.

Check the High Temperature/Low Liquid Level Safety. If the red LED on the side of the controller is on, make sure the fluid level in the bath is between the marks in the baffle and the HIGH TEMP/LOW LEVEL SAFETY setting is greater than the fluid temperature. Turn the I/O switch off then back on, and attempt to restart.

Loss of cooling capacity

Be sure the cooling capacity of the unit has not been exceeded if circulating to an external system.

When the unit is shut off, wait approximately five minutes before restarting. This allows time for the refrigeration pressures to equalize. If the pressures are not allowed to equalize, the compressor will short-cycle (clicking sound) and no cooling will occur.

Proper ventilation is required for heat removal. Make sure ventilation through the front and rear panels is not impeded and the panels are free of dust and debris.

Ice build up on the cooling coils can act as insulation and lower the cooling capacity. Raise the temperature of the bath to de-ice the cooling coil and increase the concentration of non-freezing fluid.

No external circulation

Check for obstructions, kinks, or leaks in the circulation tubing.

Circulation will cease when the pump head has been exceeded.

No/poor temperature control

Check RS232/remote operation on or off.

Check external sensor connection. Perform calibration.

Continued on next page.

No serial communications

All units are tested for serial communications before they leave the factory. Ensure the REMOTE indicator on the controller is illuminated.

Check all communications commands, they *must be exact*. See Appendix.

Check communications settings. The protocol uses an RS-232 serial interface with the parameters: 9600 baud, 8 data bits, 1 stop bit and no parity.

Check all wiring for proper connections or possible shorts.

Software to verify serial communication is available from NESLAB.

Service Assistance and Technical Support

If, after following these troubleshooting steps, your unit fails to operate properly, contact our Customer Service Department for assistance (see Preface, After-sale Support). In addition to arranging warranty service, our Service Department can provide you with a wiring diagram and a complete list of spare parts for your unit. Before calling, please obtain the following:

Part number
Serial number
Software version

Section VII Programming Software

NEScom Software/ RS232 Communication

The NESLAB Communications Software is a user-friendly software that allows you to automate your temperature control process. The software includes a 3½" disk, comprehensive operator's manual and a toll-free number to a trained technical staff.

NEScom Software allows you to write custom temperature programs for our Digital or Microprocessor based temperature control apparatus. Choose upper or lower temperature limits and monitor system status with an alarm. NEScom can also record your results on a user selectable graph. NesCom must be used with an IBM or 100% compatible computer.

Select from easy to use product icons.

Create graphs and charts.

Easily configure ramping functions that set the setpoint over time.

View pop-up alarm windows that display if an alarm condition occurred.

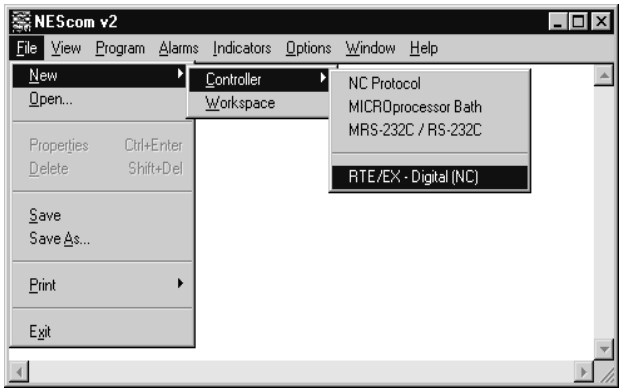

Select software functions from the easy to use pulldown menus.

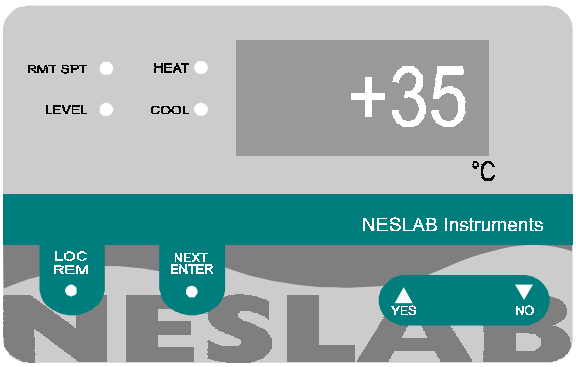

View a virtual controller screen which allows remote monitoring and operation of product control panel.

Appendix A Serial Communications Protocol

NOTE: This appendix assumes you have a basic understanding of communications protocols.

All data is sent and received in binary form, do not use ASCII. In the following pages the binary data is represented in hexadecimal (hex) format.

The Neslab Serial Communications Protocol, NC, is based on a master-slave model. The master is a host computer, while the slave is the bath's controller. Only the master can initiate a communications transaction (half-duplex). The slave ends the transaction by responding to the master's query. The protocol uses an RS-232 serial interface with the default parameters: 9600 baud, 1 start bit, 8 data bits, 1 stop bit and no parity.

NOTE: Before the unit will communicate, RS232 must be turned on in the controller's Setup Loop.

The unit can be controlled through your computer's serial port by using the unit's standard 9-pin RS-232 connection. Data read of the serial port connects to the data transmit (pin 2) of the bath. Data transmit of the serial port connects to data read (pin 3) of the bath.

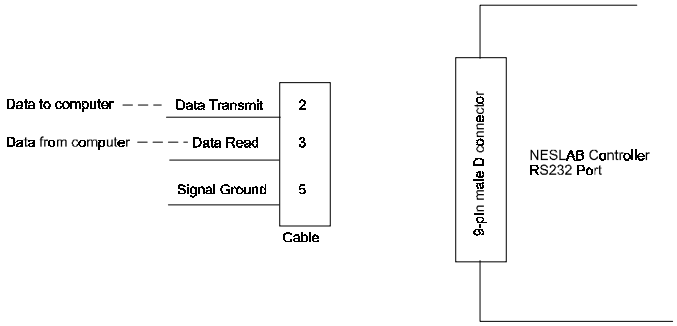

Communication cables are available from NESLAB. Contact our sales department for additional information.

All commands must be entered in the exact format shown in the tables on the following pages. The tables on on the last page of this Appendix show all commands available, their format and responses. Controller responses are either the requested data or an error message. The controller response *must* be received before the host sends the next command.

The host sends a command embedded in a single communications packet, then waits for the controller's response. If the command is not understood or the checksums do not agree, the controller responds with an error command. Otherwise, the controller responds with the requested data. If the controller fails to respond within 1 second, the host should resend the command.

NEScom Serial Communications Protocol

NOTE: All byte values are shown in hex, hex represents the binary values that must be sent to the bath. **Do not use ASCII.**

The framing of the communications packet in both directions is:

	Checksum region						
Lead char CA	Addr-MSB 00	Addr-LSB 01	Command	n d-bytes	d-byte 1 ...	d-byte n	Checksum

Lead char	CA (hex).
	Device address is 1
Addr-msb	Most significant byte of device address is 00 hex.
Addr-lsb	Least significant byte of device address is 01 hex.
Command	Command byte (see Table 1).
n d-bytes	Number of data bytes to follow (00 to 03 hex).
d-byte 1	1st data byte (the qualifier byte is considered a data byte).
...	...
d-byte n	nth data byte.
Checksum	Bitwise inversion of the 1 byte sum of bytes beginning with the most significant address byte and ending with the byte preceding the checksum. (To perform a bitwise inversion, "exclusive OR" the one byte sum with FF hex.)

The master requests information by sending one of the Read Functions as shown in Table 1 on page 30. Since no data is sent to the bath during a read request, the master uses 00 for the number of data bytes following the command byte.

The bath will respond to a Read Function by echoing the lead character, address, and command byte, followed by the requested data and checksum. When the bath sends data, a qualifier byte is sent first, followed by a two byte signed integer (16 bit, MSB sent first). The qualifier byte indicates the precision and units of measure for the requested data as detailed in Table 2, see page 30.

As an example, the master requests to read internal temperature by sending:



If the temperature is -10.5°C, the slave would reply:

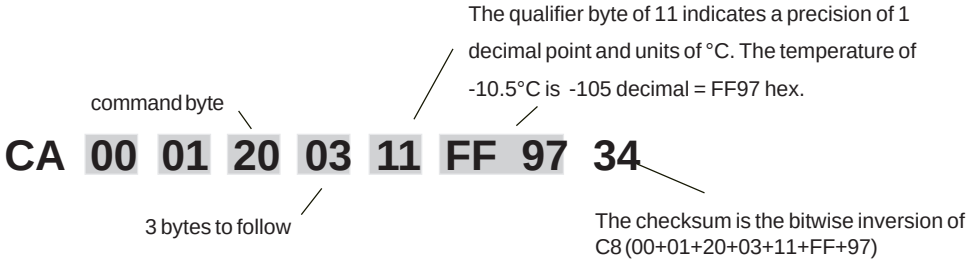

The master sets parameters in the bath by sending one of the Set Functions as shown in Table 1. The master does not send a qualifier byte in the data field. The master should be preprogrammed to send the correct precision and units (it could also read the parameter of interest first to decode the correct precision and units needed).

For example, if the master wants to set the setpoint to 30°C, it would send :

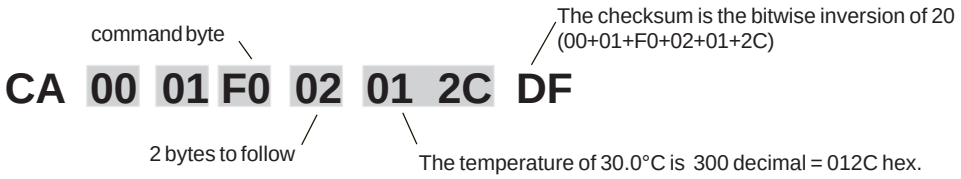

The slave responds:

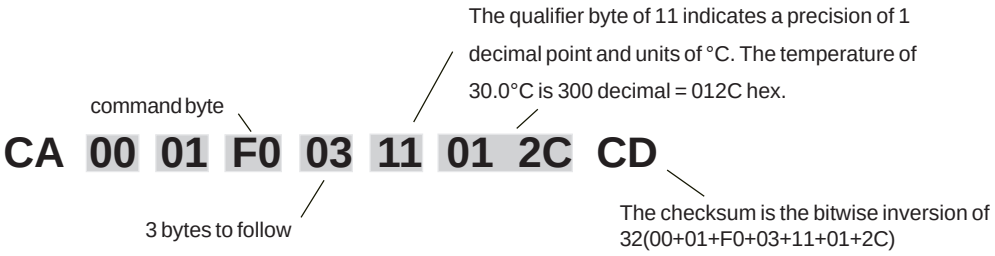

Table 1 (All bytes are in hex)

FUNCTION	MASTER SENDS	BATH RESPONDS
READ		
Read Internal Temperature	CA 00 01 **20** 00 DE	CA 00 01 **20** 03 qb d1 d2 cs
Read External Sensor	CA 00 01 **21** 00 DD	CA 00 01 **21** 03 qb d1 d2 cs
Read Setpoint (control point)	CA 00 01 **70** 00 8E	CA 00 01 **70** 03 qb d1 d2 cs
Read Low Temperature Limit	CA 00 01 **40** 00 BE	CA 00 01 **40** 03 qb d1 d2 cs
Read High Temperature Limit	CA 00 01 **60** 00 9E	CA 00 01 **60** 03 qb d1 d2 cs
Read Proportional Band (P)	CA 00 01 **71** 00 8D	CA 00 01 **71** 03 qb d1 d2 cs
Read Integral (I)	CA 00 01 **72** 00 8C	CA 00 01 **72** 03 qb d1 d2 cs
Read Derivative (D)	CA 00 01 **73** 00 8B	CA 00 01 **73** 03 qb d1 d2 cs
SET		
Set Setpoint (control point)*	CA 00 01 **F0** 02 d1 d2 cs	CA 00 01 **F0** 03 qb d1 d2 cs
Set Low Temperature Limit*	CA 00 01 **C0** 02 d1 d2 cs	CA 00 01 **C0** 03 qb d1 d2 cs
Set High Temperature Limit*	CA 00 01 **E0** 02 d1 d2 cs	CA 00 01 **E0** 03 qb d1 d2 cs
Set Proportional Band (P=1-99.9)	CA 00 01 **F1** 02 d1 d2 cs	CA 00 01 **F1** 03 qb d1 d2 cs
Set Integral (I = 0-9.99)	CA 00 01 **F2** 02 d1 d2 cs	CA 00 01 **F2** 03 qb d1 d2 cs
Set Derivative (D= 0-5.0)	CA 00 01 **F3** 02 d1 d2 cs	CA 00 01 **F3** 03 qb d1 d2 cs
BATH ERROR RESPONSES		
Bad Command	N/A	CA 00 01 **0F** 02 01 ed cs
Bad Checksum	N/A	CA 00 01 **0F** 02 03 ed cs
MISCELLANEOUS		
Request Acknowledge	CA 00 01 **00** 00 FE	CA 00 01 **00** 02 v1 v2 cs

command bytes shown in **bold**
qb = qualifier byte
d1,d2 = 16 bit signed integer of the value being sent or received
cs = the checksum of the string (see text)
ed = echo back of the command byte as received
v1,v2 = protocol version
* = limited to the range of the bath

Table 2

QUALIFIER BYTE

10 hex	0.1 precision, no units of measure
20 hex	0.01 precision, no units of measure
11 hex	0.1 precision, °C units

Example: The temperature of 45.6 °C would be represented by the qualifier 11 hex, followed by the 2 bytes 01 C8 hex (456 decimal).

WARRANTY

NESLAB Instruments, Inc. warrants for 12 months from date of shipment any NESLAB unit according to the following terms.

Any part of the unit manufactured or supplied by NESLAB and found in the reasonable judgment of NESLAB to be defective in material or workmanship will be repaired at an authorized NESLAB Repair Depot without charge for parts or labor. The unit, including any defective part must be returned to an authorized NESLAB Repair Depot within the warranty period. The expense of returning the unit to the authorized NESLAB Repair Depot for warranty service will be paid for by the buyer. NESLAB's responsibility in respect to warranty claims is limited to performing the required repairs or replacements, and no claim of breach of warranty shall be cause for cancellation or recision of the contract of sales of any unit.With respect to units that qualify for field service repairs, NESLAB's responsibility is limited to the component parts necessary for the repair and the labor that is required on site to perform the repair. Any travel labor or mileage charges are the financial responsibility of the buyer.

The buyer shall be responsible for any evaluation or warranty service call (including labor charges) if no defects are found with the NESLAB product.

This warranty does not cover any unit that has been subject to misuse, neglect, or accident. This warranty does not apply to any damage to the unit that is the result of improper installation or maintenance, or to any unit that has been operated or maintained in any way contrary to the operating or maintenance instructions specified in NESLAB's Instruction and Operation Manual. This warranty does not cover any unit that has been altered or modified so as to change its intended use.

In addition, this warranty does not extend to repairs made by the use of parts, accessories, or fluids which are either incompatible with the unit or adversely affect its operation, performance, or durability.

NESLAB reserves the right to change or improve the design of any unit without assuming any obligation to modify any unit previously manufactured.

THE FOREGOING EXPRESS WARRANTY IS IN LIEU OF ALL OTHER WARRANTIES, EXPRESSED OR IMPLIED, INCLUDING BUT NOT LIMITED TO WARRANTIES OR MERCHANTABILITY AND FITNESS FOR A PARTICULAR PURPOSE.

NESLAB'S OBLIGATION UNDER THIS WARRANTY IS STRICTLY AND EXCLUSIVELY LIMITED TO THE REPAIR OR REPLACEMENT OF DEFECTIVE COMPONENT PARTS AND NESLAB DOES NOT ASSUME OR AUTHORIZE ANYONE TO ASSUME FOR IT ANY OTHER OBLIGATION.

NESLAB ASSUMES NO RESPONSIBILITY FOR INCIDENTAL, CONSEQUENTIAL, OR OTHER DAMAGES INCLUDING, BUT NOT LIMITED TO LOSS OR DAMAGE TO PROPERTY, LOSS OF PROFITS OR REVENUE, LOSS OF THE UNIT, LOSS OF TIME, OR INCONVENIENCE.

This warranty applies to units sold in the United States. Any units sold elsewhere are warranted by the affiliated marketing company of NESLAB Instruments, Inc. This warranty and all matters arising pursuant to it shall be governed by the law of the State of New Hampshire, United States. All legal actions brought in relation hereto shall be filed in the appropriate state or federal courts in New Hampshire, unless waived by NESLAB.

RTE 140 Bath/Circulator
with Microprocessor Controller

Thermo NESLAB Manual P/N 000018
Rev. 09/20/00

Instruction and Operation Manual



RTE-140 Refrigerated Bath/Circulator
Instruction and Operation Manual

Table of Contents

PREFACE

Compliance 2
Unpacking 2
Warranty 2
NES-care 2
After-sale Support 2

SECTION I
Safety

Warnings 3

SECTION II
General Information

Description 4
Specifications 4

SECTION III
Installation

Site 5
Electrical Requirements 5
Plumbing Requirements 6
Fluids 8
Filling Requirements 8

SECTION IV
Controllers

Microprocessor Controller 9
Start Up 11
Temperature Adjustment 12
Alarm/External Functions 13
Program Functions 14
Program Control 17
Error Messages 20
Miscellaneous 20
PID Control 21
Restoring Factory Preset Values 21
Calibration 22
High Temperature/Low Liquid Level Safety 24

SECTION V
Maintenance

Service Contracts 25
Condenser 25
Reservoir Cleaning 26
Algae 26

SECTION VI
Troubleshooting

Checklist 27
Service Assistance and Technical Support 28

APPENDIX A RS-232 OPERATION AND REMOTE PROGRAMMING
APPENDIX B PROGRAMMING SOFTWARE

Preface

Compliance

Products tested and found to be in compliance with the requirements defined in the EMC standards defined by 89/336/EEC as well as Low Voltage Directive (LVD) 73/23/EEC can be identified by the CE label on the rear of the unit. The testing has demonstrated compliance with the following directives:

LVD, 73/23/EEC	Complies with UL 3101-1:93
EMC, 89/336/EEC	EN 55011, Class A Verification
	EN 50082-1:1992
	IEC 1000-4-2:1995
	IEC 1000-4-3:1994
	IEC 1000-4-4:1995

For any additional information refer to the Letter of Compliance that shipped with the unit (Declaration of Conformity).

Unpacking

Retain all cartons and packing material until the unit is operated and found to be in good condition. The unit control box for microprocessor units is packed in a separate carton. Be sure to locate this separate carton; do not dispose of it by mistake.

If the unit shows external or internal damage, or does not operate properly, contact the transportation company and file a damage claim. Under ICC regulations, this is your responsibility.

Warranty

Units have a one year warranty against defective parts and workmanship from date of shipment. See back page for more details.

NES-care Extended Warranty Contract

- Extend parts and labor coverage for an additional year.
- Worry-free operation.
- Control service costs.
- Eliminate the need to generate repair orders.
- No unexpected repair costs.

Other contract options are available. Please contact Thermo NESLAB for more information.

After-sale Support

Thermo NESLAB is committed to customer service both during and after the sale. If you have questions concerning the operation of your unit, contact our Sales Department. If your unit fails to operate properly, or if you have questions concerning spare parts or Service Contracts, contact our Customer Service Department. Before calling, *please* obtain the following information from the unit's serial number label:

- *BOM number*
- *Serial number*

Section I Safety

Warnings

Make sure you read and understand all instructions and safety precautions listed in this manual before installing or operating your unit. If you have any questions concerning the operation of your unit or the information in this manual, contact our Sales Department.

Performance of installation, operation, or maintenance procedures other than those described in this manual may result in a hazardous situation and may void the manufacturer's warranty.

Transport the unit with care. Sudden jolts or drops can damage the refrigeration lines.

Observe all warning labels.

Never remove warning labels.

Never operate damaged or leaking equipment.

Never operate the unit without bath fluid in the bath.

Above 115°C, never use pure ethylene glycol as a bath fluid.

For 220 - 240 volt units supplied without a line cord, use a harmonized (HAR) grounded 3-conductor cord, type H 0 5 V V - F , with conductors listed below. A suitable cord end is required for connecting to the equipment (see unit socket) and must terminate with an IEC approved plug for proper connection to power supply.

Nominal 1.0 mm² cross section rated 10 Amps Unit Socket: IEC - 320 C13

Always turn off the unit and disconnect the line cord from the power source before performing any service or maintenance procedures, or before moving the unit.

Always empty the bath before moving the unit.

Never operate equipment with damaged line cords.

Refer service and repairs to a qualified technician.

In addition to the safety warnings listed above, warnings are posted throughout the manual. These warnings are designated by an exclamation mark inside an equilateral triangle with text highlighted in bold print. Read and follow these important instructions. Failure to observe these instructions can result in permanent damage to the unit, significant property damage, personal injury or death.

Section II General Information

Description

The RTE 140 Refrigerated Bath/Circulators are designed to provide temperature control for applications requiring a fluid work area or pumping to an external system.

Units consists of a non-CFC air-cooled refrigeration system, circulation pump, seamless stainless steel bath, work area cover, and a microprocessor temperature controller.

Specifications

Temperature Range	-40°C to +150°C
Temperature Stability[1]	±0.05°C
Cooling Capacity[2]	500 Watts @ 0°C
Pump Capacity	15 lpm at 0' (0 M) 0 lpm at 16' (4.9 M)
Heater[3] *Watts*	800
Bath Work Area *(L x W x D)* *Inches* *Centimeters*	4 3/4 x 8 x 5 12.1 x 20.3 x 12.7
Bath Volume *Gallons* *Liters*	1.9 7.0
Case Dimensions *(H x W x D)* *Inches* *Centimeters*	26 x 12 3/8 x 18 3/8 66.0 x 31.4 x 46.7
Power Requirements[4]	115 V, 60 Hz, 16 Amp 220/240 V, 50 Hz, 8.6 Amp

1. Specifications listed for units operating at +20°C bath temperature with tap water as bath fluid.
2. 60 Hertz units. 50 Hertz units have a 375 watt coolinig capacity at 0°C. Specifications listed for units operating at +0°C bath temperature, +20°C (+68°F) ambient, using fluid with specific heat of 0.5.
3. 60 Hertz units. 50 Hertz units have a 1000 watt heater.
4. Power Board Transformer Fuse–T 2.0A 250V (Qty) [T=Time Delay]

Section III Installation

Site

The indentations on the sides of the unit are designed to function as handles. Lift the unit by the handles and locate it on a sturdy table or bench top. Ambient temperatures should be inside the range of +50°F to +104°F (+10°C to +40°C).



Never place the unit in a location where excessive heat, moisture, or corrosive materials are present.

The unit has an air-cooled refrigeration system. Air is drawn through the front panel and discharged through the rear panel. The unit must be positioned so the air intake and discharge are not impeded. A minimum clearance of 12 inches (30 centimeters) at the front and rear of the unit is necessary for adequate ventilation. Inadequate ventilation will reduce cooling capacity and, in extreme cases, can cause compressor failure.

Excessively dusty areas should be avoided and a periodic cleaning schedule should be instituted (see Section VI, Cleaning).

The unit is rated for heat load at 20°C (68°F) ambient temperature. Above this temperature reduce the cooling capacity 1% for every 1°F above +68°F, to a maximum ambient temperature of +104°F. In terms of Celsius, reduce the cooling capacity 1% for every 0.5°C above +20°C, to a maximum ambient temperature of +40°C.

Electrical Requirements



Line voltage may be easily accessible inside the pump/control box. Always unplug the unit prior to removing pump/control box cover.

Refer to the serial number label on the rear of the unit to identify the specific electrical requirements of your unit.

Ensure the voltage of the power source meets the specified voltage, ±10%.

The unit construction provides extra protection against the risk of electric shock by grounding appropriate metal parts. The extra protection may not function unless the power cord is connected to a properly grounded outlet. It is the user's responsibility to assure a proper ground connection is provided.



For 220 - 240 volt units supplied without a line cord, use a harmonized (HAR) grounded 3-conductor cord, type H 0 5 V V - F , with conductors listed below. A suitable cord end is required for connecting to the equipment (see unit socket) and must terminate with an IEC approved plug for proper connection to power supply.

Nominal 1.0 mm² cross section rated 10 Amps Unit Socket: IEC - 320 C13

Plumbing Requirements

Ensure the unit is off before connecting tubing to the unit.

To prevent damage to the plumbing lines, always support the ¾" fittings while installing/removing the pumping caps and lines.

Hose Connections

The pump connections are located at the rear of the pump box and are labelled PUMP INLET and PUMP OUTLET. These connections are bent upward so the recirculating fluid will drain back into the reservoir when the hoses are disconnected. Both connections are capped with stainless steel serrated plugs.

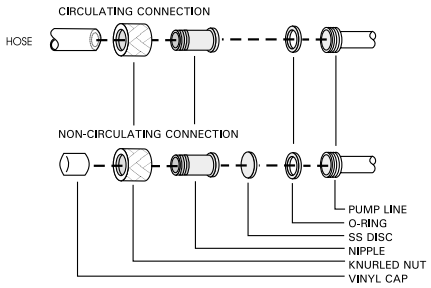

The pump lines have ¼" male pipe threads for mating with standard plumbing fittings. For your convenience two stainless steel adapters, ¼" female pipe thread to ⅜" O.D. serrated fitting, are provided. (To assure proper fit, they should be installed using Teflon® tape around the threads.)

Flexible tubing, if used, should be of heavy wall or reinforced construction. Make sure all tubing connections are securely clamped. Avoid running tubing near radiators, hot water pipes, etc. If substantial lengths of tubing are necessary, insulation may be required to prevent loss of cooling capacity.

Tubing and insulation are available from Thermo NESLAB. Contact our Sales Department for more information (see Preface, After-sale Support).

It is important to keep the distance between the unit and the external system as short as possible, and to use the largest diameter tubing practical. Tubing should be straight and without bends. If diameter reductions must be made, make them at the inlet and outlet of the external system, not at the unit.

If substantial lengths of cooling lines are required, they should be pre-filled with bath fluid before connecting them to the unit. This will ensure that an adequate amount of fluid will be in the bath once it is in operation.

Pumping

The pump is designed to deliver a flow of 15 liters/minute (4 gallons minute) at 0 feet head. To prevent external circulation, the PUMP INLET and PUMP OUTLET lines on the rear of the unit are capped. The caps must be removed when external circulation is required.

To properly secure external hose connections to the unit, wrap Teflon® tape around the pipe line threads before installation. Once the hose connections are made, the hoses must be properly plumbed to an external system. *It is important the bath is not in operation until all plumbing is complete.*

NOTE: To increase agitation in the bath when not circulating externally, connect a short loop of hose between the inlet and outlet lines.

If the bath is not used for external circulation, make sure the stainless steel caps are in place prior to operating the bath.

Circulating to an open container

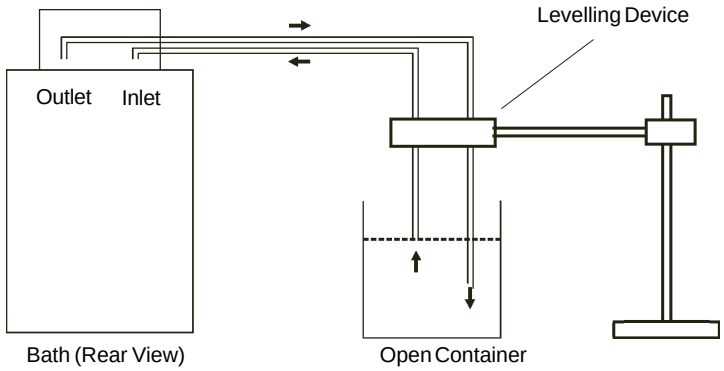

A stainless steel leveling device is available to aid circulation to an open vessel. Contact our Sales Department for more information (see Preface, After-sale Support).

Support the leveling device over the open container with a ringstand. Stagger the tubes in the leveling device so one tube is submerged in the vessel fluid, and the other tube is level with the fluid surface. Connect the deeper tube to the PUMP OUTLET and the shorter tube to the PUMP INLET.

Adjust the flow rate using the accessory flow control valve connected to the PUMP OUTLET, or by partially restricting the outlet tubing. When properly adjusted, the pump inlet will draw an occasional air bubble to prevent over flow, and the pump outlet will force fluid through the submerged tube to prevent aeration of the vessel.

To avoid siphoning the bath work area when the unit is shut off, lift the leveling device out of the vessel and above the level of the unit.

Circulating through two closed loops

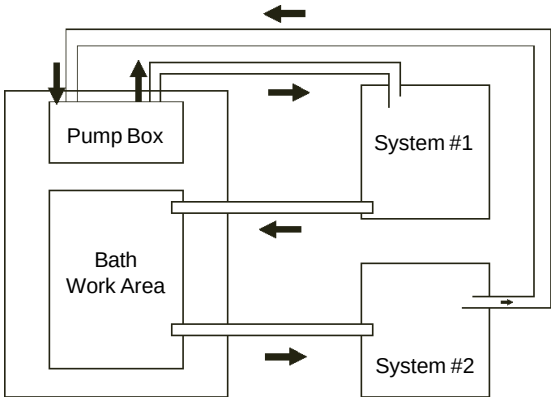

The pump can be used to circulate through two closed loop systems. Connect the shortest practical length of flexible tubing from the PUMP OUTLET to the inlet of external system #1. Connect the outlet of system #1 directly into the bath work area. Connect tubing from the bath work area to the inlet of system #2. Connect the outlet of system #2 to the PUMP INLET.

Drain



Ensure the temperature of the bath fluid is safe before draining the unit.

The unit is equipped with a drain located at the back of the unit at the base of the bath. The drain has ¼ inch male pipe threads and is capped with a stainless steel plug. To drain the reservoir simply remove the cap.

To assure proper fit when replacing the cap, be sure to line the threads with Teflon tape.

Fluids



Never use flammable or corrosive fluids with this unit.

The selected fluid must have a viscosity of 50 centistokes or less at the lowest operating temperature.

Filtered tap water is the recommended fluid for operation from +8°C to +80°C.

For operation from +8°C to -30°C, a 50/50 mixture, by volume, of filtered tap water and laboratory grade ethylene glycol is suggested.

Above +80°C and below -30°C, the user is responsible for fluids used.



Never use pure ethylene glycol as a bath fluid. A minimum 80/20 mixture of Ethylene Glycol and filtered tap water is allowed.

Filling Requirements

The bath work area has a high and low level marker to guide filling. The markers are 1 inch horizontal slits located in the center of the stainless steel baffle separating the work area and the pump assembly. The correct fluid level falls between these two markers. The heating and cooling coils will be exposed and may become damaged if the correct fluid level is not provided.

When pumping to an external system, keep extra fluid on hand to maintain the proper level in both the circulating lines and the external system.



Never run the unit when the work area is empty. Avoid overfilling. Overfilling the bath may damage the insulation, and affects stability as well as low-end performance.

Section IV Microprocessor Controllers

Microprocessor Controller

Description

The microprocessor controller is designed as a separate component from the unit. The controller can be mounted directly on the pump box, or remotely from the bath. The controller provides proportional with integral and derivative (PID) control.

The controller has two sections. The upper section contains the LED indicators and the Main display which provide feedback to you about the controller and bath. The ten individual LED indicators provide output on selected parameters while the Main display will provide information on various unit conditions. The lower section contains the keypad you use to input data to the controller.

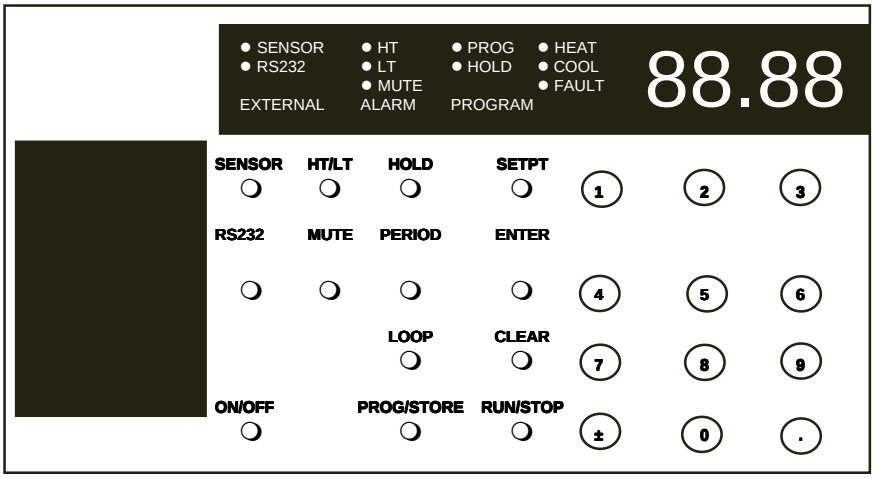

Microprocessor Temperature Controller (Front View)

Controller Mounting

The controller can be removed from the bath and placed in a remote location. Extension cables are available from Thermo NESLAB. Contact our Sales Department for more information.

Controller Connection

Microprocessor controllers are supplied with a cable needed to connect the controller to the pump box. Connect the cable to the 25-pin male connector on the control box and the female connector on the pump box. Once the connection is made, the unit is ready for operation.

NOTE: The MAIN POWER should be OFF before connecting/disconnecting cables from the control box.

LED Indicators

The following table explains the controller LED indicators. The LEDs can be on, off or flashing.

LED	STATUS	INDICATION
SENSOR	OFF	All controller functions are operating from the unit's internal probe.
	ON	All controller functions are operating from remote sensor input.
	FLASHING	The Main display indicates the remote sensor temperature. The controller, however, still uses the internal probe to control the bath temperature.
RS232	OFF	Communication port disabled.
	ON	Communication port enabled.
	FLASHING	Awaiting next key press
LT	OFF	No alarm.
	ON	Main display indicates low limit setpoint.
	FLASHING	Low limit alarm condition.
HT	OFF	No alarm.
	ON	Main display indicates high limit setpoint.
	FLASHING	High limit alarm condition.
HOLD	OFF	Programming hold feature disabled.
	ON	Programming hold feature enabled.
PROG	OFF	No program running.
	ON	The program is suspended[1].
	FLASHING	The program is running.
COOL	OFF	Refrigeration is off[2].
	ON	Refrigeration is on.
HEAT	OFF	The heater is off.
	ON	The heater is on.
	FLASHING	The heater duty cycle.
MUTE	OFF	The alarm is enabled.
	ON	The alarm horn is disabled.
	FLASHING	The alarm horn has been disabled for any current condition. The alarm horn will automatically reset when the condition is cleared.
FAULT	OFF	No fault condition.
	ON	The high temperature/low level safety has activated.

1. The bath fluid will maintain the setpoint achieved at the time the program is suspended, except when the bath is in a rapid cool segment. No operator inputs are available to the controller while in a suspended condition.
2. Below 40°C the refrigeration is on unless the setpoint is more than 2°C above the bath temperature. This allows rapid heat up. Above 40°C refrigeration is off.

Start Up

Before starting the unit, check all electrical and plumbing connections and make sure the work area has been properly filled with bath fluid.

NOTE: The fluid level should be between the two lateral slots at the rear of the reservoir.

To power the controller, place the MAIN POWER switch on the side of the unit to the ON position. This only supplies power to the controller. *The unit itself is not operating.* The Main display on the controller will display OFF.

220V units have a circuit breaker instead of a switch. The circuit breaker is labeled **I** (power on) and **O** (power off). Ensure the circuit breaker is in the **I** position.

Press the keypad ON/OFF button on the controller. The pump will start and the Main display will indicate the temperature of the fluid in the bath. The controller will respond to the current setpoint.

Pressing the keypad ON/OFF button again will disable control of the bath and shut down the pump. The Main display will indicate OFF. (When the controller is in the RS232 mode of operation, see Appendix A, the ON/OFF button is deactivated. Control of the bath can only be disabled via an RS232 input.)

NOTE: The refrigeration system is designed to automatically shut off at temperatures above 40°C.

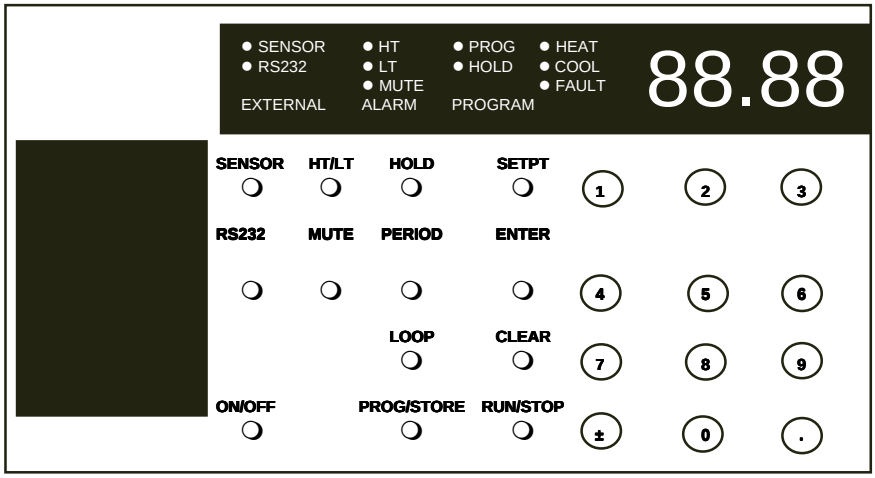

Temperature Adjustment

To display the temperature setpoint, press SETPT. The Main display will flash the current setpoint. Press ENTER to return the display to the bath's fluid temperature. To adjust the setpoint press SETPT and then press CLEAR, the display will go blank. Use the keypad to input the desired value. If the value is correct press ENTER. If the value is incorrect press CLEAR, the display will go blank. Use the keypad to correct the value and press ENTER.

Low and High Temperature Limits

To display the temperature limits, press HT/LT. Either the HT or LT LED will illuminate and the Main display will flash the corresponding temperature limit. Press ENTER and then press HT/LT again to observe the other temperature limit. The corresponding LED on the controller will illuminate. Should either limit be exceeded an alarm will sound (if not muted) and the corresponding LED will flash.

To adjust either limit, press HT/LT and then press CLEAR, the display will go blank. Use the keypad to input the desired value. If the value is correct press ENTER. If the value is incorrect press CLEAR, the display will go blank. Use the keypad to correct the value and press ENTER. Use the LT or HT LED indicators to verify which temperature limit you are changing.

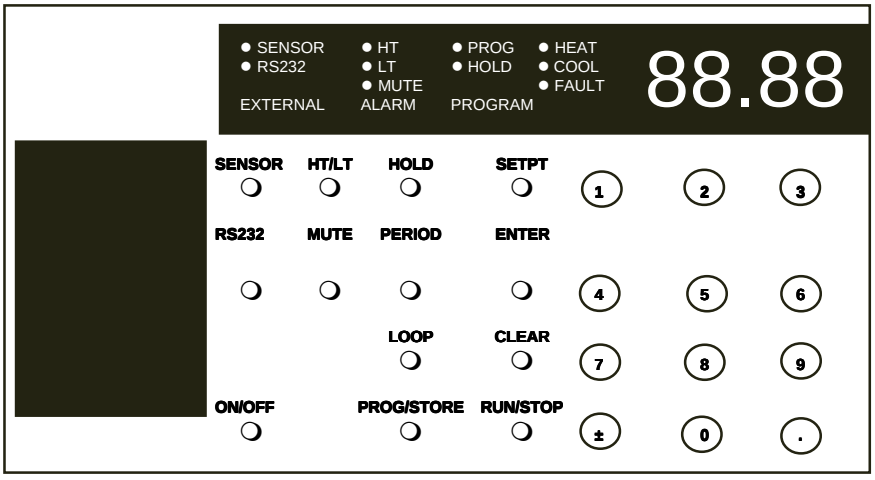

Alarm/External Functions

Mute Alarm

The alarm audio may be permanently silenced by pressing MUTE, and then immediately (within one second) pressing HOLD. The MUTE LED will now stay lit. To restore the audio, press MUTE and then immediately (within one second) press CLEAR. The MUTE LED will extinguish.

If desired, you may mute the audible portion of an alarm for an existing condition. Press MUTE on the temperature controller. The MUTE LED flashes to indicate a muted alarm horn. The MUTE button acts as a toggle switch to activate/deactivate the alarm horn. The appropriate HT or LT LED will continue to flash during the alarm condition. If the alarm is muted for an existing condition it will automatically reset once the temperature limit problem is corrected. The alarm will resound if a limit is exceeded another time unless MUTE is pressed again.

Sensor

The controller has the capability to enable and/or monitor a remote bath's temperature sensor. (Remote sensor probes of various sizes are available from Thermo NESLAB. Contact our Sales Department for more information.) Pressing SENSOR, when a remote sensor is properly connected to the controller's 9-pin SENSOR connector, will display the remote sensor's temperature on the Main display. The SENSOR LED will flash. *The controller and alarm, however, will continue to respond to the signals from the unit's internal probe.*

To completely transfer all display, control and alarm functions to the remote sensor, press SENSOR and then press ENTER. The SENSOR LED will stay lit. The controller will not respond to the signal from the unit's internal probe.

To disable the remote sensor press SENSOR and then press CLEAR. The SENSOR LED will extinguish. All display and alarm functions will again respond to the signal from the unit's internal probe.

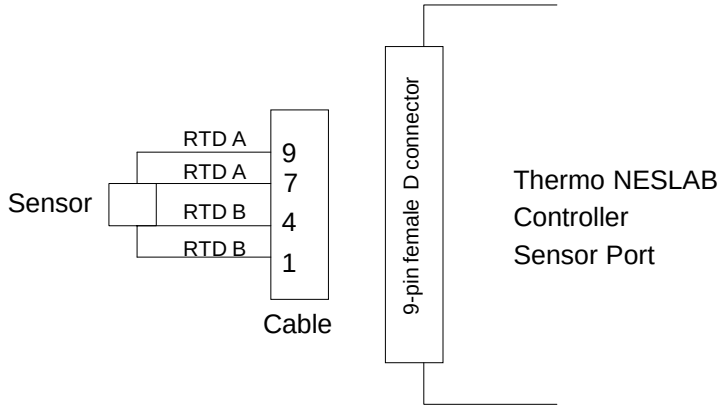

RS232

The unit can be controlled through your computer's serial port by using a standard 9-pin RS232 connection on the rear of the temperature controller. See Appendix A for details.

Program Functions

Programming

The microprocessor controller can store up to 8 temperature programs, each one having up to 15 program steps (16 setpoints). You can select, enter or run one program at a time. The procedure for selecting a program is discusssed in Program Control on page 17. The programs can cover the unit's full temperature operating range in 0.01°C increments. Step times can vary from 0 to 6,500 minutes in 0.1 minute increments. Each program can be set up to run as many as 9999 repetitions (LOOPS).

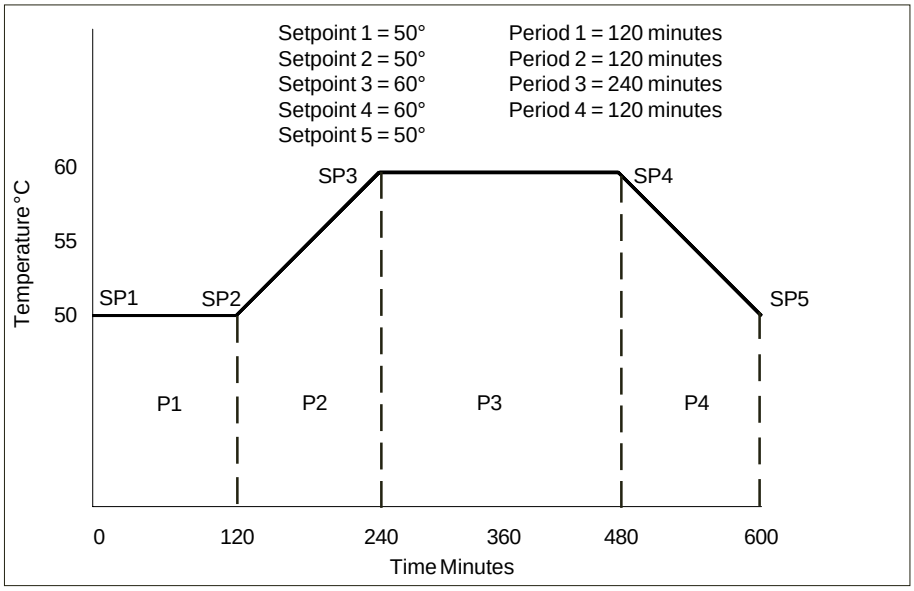

Typical Program

The controller can store all programs in its nonvolatile memory, see Program Control on page 17.

The programming process begins with program definition. Define your program as a series of setpoints with a known period of time interval between each of them. Each interval is one step. Give careful attention to the first part of your program. What conditions must exist at the beginning of your process? For example, you may wish to program an initial period of constant temperature at the starting setpoint to allow for thermal stabilization.

When you start a program it begins immediately at the initial programmed setpoint (SP1).

Consider the unit's limitations when designing programs. Temperature or time parameters which exceed the performance capabilities of the bath will result in unsatisfactory operation. It is possible to create a program calling for very rapid changes in temperature. Although the equipment may not be capable of producing such changes, it may be practical to program such steps as a way to cause the fastest *possible* temperature change.

NOTE: The refrigeration system is designed not to operate above 40°C bath temperature.

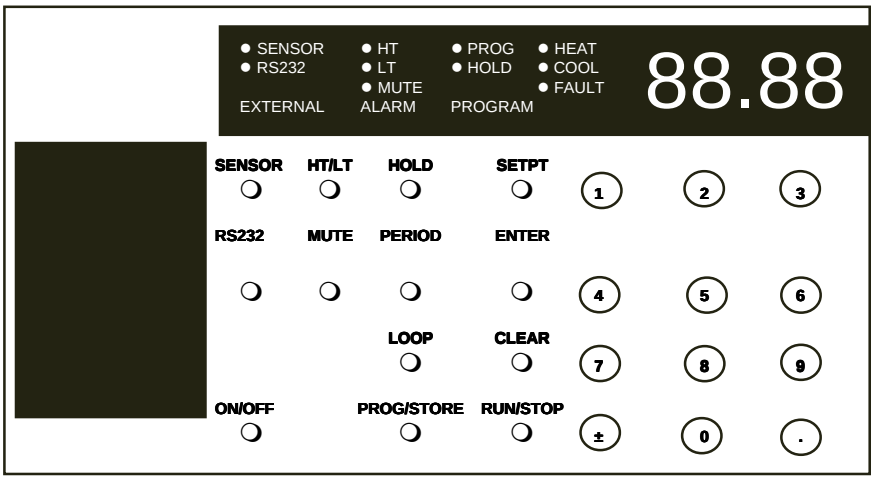

Loops

This option allows for automatic repetition(s) of a program. For example, set the number of loops to three. Once the program reaches the last setpoint, it will loop back to the first setpoint and run the program again. In this instance the program will loop back three times. The entire program will run a total of four times. The maximum number of loops is 9999.

Hold

This option determines what will happen at the end of a program. In the hold mode of operation the setpoint will remain at the final temperature when the program is completed. Without hold the setpoint will return to the starting setpoint when the program is completed. The setpoint may change abruptly, but the fluid temperature will respond as quickly as the system's heating and cooling capacity allows.

The procedures for placing the controller in the hold mode is discussed in Program Control on page 19.

Current Values

While a program is running, the program selected, current period, current setpoint, time remaining for the current step, or the current loop, may be viewed on the Main display. Momentarily depress the appropriate key listed below to view the desired parameter. After several seconds, the Main display will again indicate the temperature of the bath fluid.

SETPT ---------- View Current Setpoint

LOOP ---------- View Current Loop

PERIOD ---------- Time Remaining in Current Period

PERIOD PERIOD ---------- Current Period Number

+/- followed immediately by **PROG/STORE** -------- Selected Program Number

Assured Soak

This option is used when you need to ensure the bath temperature will reach the next setpoint (regardless of time) before moving onto the next period.

This option is controlled by a DIP switch on the rear of the controller. Turn DIP switch number seven (7) to the ON position to enable this feature.

Period Adjust

This option is used to skip the current period of a running program. See Table 13 on page 19 for the appropriate procedure. **NOTE:** If Assured Soak is activated, the bath *must* reach that setpoint before the program will continue.

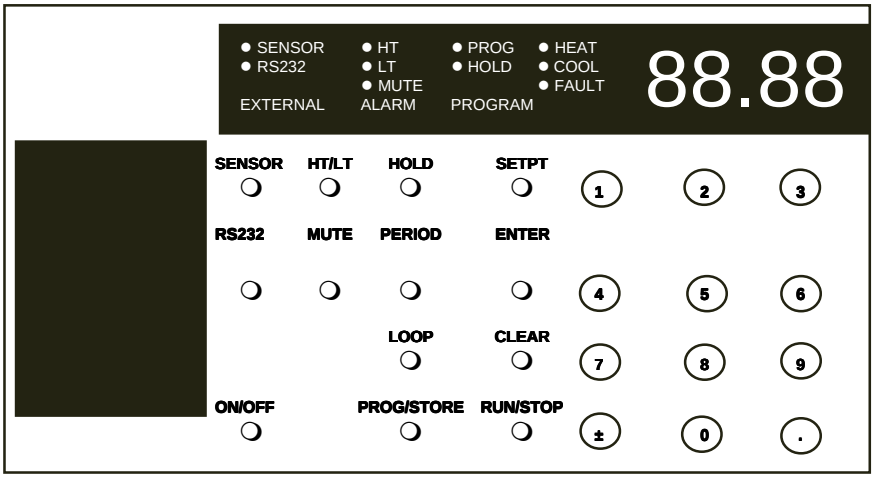

Program Control

The following tables show how to use the keypad and Main display to program the controller. If an error message appears see page 20.

Use Table 1 to select one of the eight programs to be the current program for either entering or running.

TABLE 1

Keypad input	Main Display	Comments
+/-	Current bath temperature	
-PROG/STORE[1]	**Pro** followed by the program number	Enter desired program number.
-ENTER	Current bath temperature	

1. PROG/STORE must be depressed immediately (within one second) after +/-.

Once Table 1 is complete, use Table 2 for entering and storing a two-setpoint program. You would follow this procedure for programming any number of setpoints (up to the 16 setpoint maximum).

NOTE: The number of setpoints must be one greater than the number of periods or you will get an error message.

TABLE 2

Keypad input	Main Display	Comments
-PROG/STORE	**- - - - - -**	If YES appears you should clear the current program (see Table 10).
-SETPT	**SP-1**	Input setpoint.
-ENTER	Desired setpoint	
-PERIOD	**P-1**	Input time in minutes.
-ENTER	Desired time	
-SETPT	**SP-2**	Input setpoint.
-ENTER	Desired setpoint	
-LOOPS	**LOOPS**	Input number of loops
-ENTER	Desired number of loops	
-PROG/STORE	**FILE?**	
-ENTER	Current bath temperature	

Use Table 3 to abort programming at any time.

TABLE 3

Keypad input	Main Display	Comments
-ENTER	**- - - - -**	
-PROG/STORE	**FILE?**	
-CLEAR	Current bath temperature	

Use Table 4 to scroll through a two-setpoint stored program. You would use this procedure for scrolling any number of setpoints (up to the 16 setpoint maximum).

TABLE 4

Keypad input	Main Display	Comments
-PROG/STORE	**YES**	
-ENTER	**SP-1** followed by actual value	
-ENTER	**SP-2** followed by actual value	
-ENTER	**P-1** followed by actual value	
-ENTER	**LOOPS** followed by actual value	
-ENTER	Current bath temperature	

Use Table 5 to abort scrolling through a program at any time.

TABLE 5

Keypad input	Main Display	Comments
-PROG/STORE	**FILE?**	
-ENTER	Current bath temperature	

Once Tables 1 and 2 are complete, use Table 6 to run a stored program.

TABLE 6

Keypad input	Main Display	Comments
-RUN/STOP	Current bath temperature	**PROG LED** will flash.

Use Table 7 to stop a running program.

TABLE 7

Keypad input	Main Display	Comments
-RUN/STOP	Current bath temperature	**PROG LED** will stay on steady.
-CLEAR	Current bath temperature	**PROG LED** extinguishes.

Use Table 8 to temporarily suspend a running program.

TABLE 8

Keypad input	Main Display	Comments
-RUN/STOP	Current bath temperature	**PROG LED** stays on steady.

Use Table 9 to resume a suspended program.

TABLE 9

Keypad input	Main Display	Comments
-RUN/STOP	Current bath temperature	**PROG LED** flashes.

Use Table 10 to clear a stored program.

TABLE 10

Keypad input	Main Display	Comments
-PROG/STORE	**YES**	
-PROG/STORE	**FILE?**	
-CLEAR	Current bath temperature	

Use Table 11 to add HOLD operation. (Hold must be established before running a program. The hold function is not part of the stored program.)

TABLE 11

Keypad input	Main Display	Comments
-PROG/STORE	**YES**	
-HOLD	**YES**	**HOLD** LED stays on steady.
-PROG/STORE	**FILE?**	
-ENTER	Current bath temperature	

Use Table 12 to clear hold operation.

TABLE 12

Keypad input	Main Display	Comments
-PROG/STORE	**YES**	
-HOLD	**YES**	**HOLD** LED extinguishes.
-PROG/STORE	**FILE?**	
-ENTER	Current bath temperature	

Use Table 13 to force a running program to skip ahead to the next period.

TABLE 13

Keypad input	Main Display	Comments
+/-	Current bath temperature	
-PERIOD[1]	**P-Adj**	(Period adjust)

1. PERIOD must be depressed immediately (within one second) after +/-.

Error Messages

The Main LED will indicate an error message for eight different conditions.

Error1 - Program incomplete or illogical. Re-enter the program.

Error2 - Period entered exceeds 6,500 minutes. Reenter a period.

Error3 - Entered value exceeds allowable limits. Reenter proper value.

Error4 - Loops entered greater than 9,999. Reenter loops

Error5 - Attempted to run a program without a program in memory. Build a program.

Error6 - No period or 0 entered for a program period. Enter a period.

Error7 - With alarm - SENSOR depressed without a sensor properly connected to controller. Properly connect a sensor. (If sensor is properly connected the sensor may have failed.) Without alarm - Internal probe failure, unit will shut off.

Error8 - Internal nonvolatile memory has failed. Press ENTER for the controller to reinitialize nonvolatile memory to factory preset parameters. **NOTE:** This erases any program and setpoints in nonvolatile memory. The unit will have to be recalibrated.

Miscellaneous

Additional Parameters

Two parameters can also be set while the controller is deactivated (Main display shows OFF). You can adjust the light intensity of the Main display and set the controller pushbuttons to "beep" or not when depressed.

To adjust the Main display intensity first press the "±" key on the controller keyboard. Repeatedly depress the "1" key to decrease intensity or the "3" key to increase. Each press changes the intensity an incremental amount. Once the desired intensity is displayed press ENTER.

To silence the "beep" first press the "." key. Press "0" to turn the beep off or press "1" to turn it on. Next, press ENTER.

DIP Switches

Three DIP switches on the rear of the controller are operational. Switch #1 controls the temperature scale. OFF (up position) displays the temperature in °C, ON (down position) displays the temperature in °F.

Switch #6 sets the display update rate the controller uses to display temperature. This will determine how sensitive the display will be to temperature fluctuations. OFF sets a fast rate, ON sets a slow rate. (OFF causes more fluctuations than ON.)

Switch #7 controls the assured soak option for programs. ON enables assured soak.

PID Control

PID controllers are best suited for systems that may experience changing heat loads. Proportional control is combined with Integral and Derivative adjustments which allow the controller to automatically compensate for any changes from the setpoint. You may have to experiment with the PID settings to find out which are most suitable to your application.

To change or view any of the PID settings the controller must be operating.

To change or view the proportional band, press "1" and immediately, within one second, press ENTER. The "percent of span" value will flash on the Main display. Press ENTER to accept the value. To change the value press CLEAR and then enter the desired value. Press ENTER to exit this mode.

To change or view the Integral, press "2" and and immediately, within one second, press ENTER. The "repeats per minute" value will flash on the Main display. Press ENTER to accept the value. To change the value press CLEAR and then enter the desired value. Press ENTER to exit this mode.

To change or view the Derivative, press "3" and and immediately, within one second, press ENTER. The "minutes" value will flash on the screen. Press ENTER to accept the value. To change the value press CLEAR and then enter the desired value. Press ENTER to exit this mode.

Restoring Factory Preset Values

To restore the factory preset values hold the "0" button on the keypad and turn the Main Power switch on the side of the unit to the ON position. Release the "0" button and the Main display will indicate OFF. The following preset values will be installed:

P =0.6%
I =0.25 repeats per minute
D =0.05 minutes

In addition, the following values will be preset

BAUD Rate	=9600
Stop bits	=1
Data Bits	=8
Parity	=none

Calibration

The microprocessor controller has three different modes of calibration: Self-Cal, Two-point, and One-point. The controller is shipped from the factory with a Two-point calibration so no additional controller calibration may be required. Both the internal probe and the remote sensor input must be independently calibrated. Different calibration modes for each probe can be used if desired. The remote sensor input has been Self-Calibrated at the factory.

Self-Cal is used to initialize the analog-to-digital (A/D) converter input channel before performing the other types of calibrations. This mode removes all previous calibrations and brings the measurement error to less than 2°C. If this is the required accuracy, then no additional calibration is needed.

Two-point calibration is used to negate A/D and probe errors over the full span of the controller. This type of calibration is performed when high accuracy is desired.

One-point calibration (offset) is used to make the controller very accurate at one specific operating temperature.

One-point Calibration can be performed after a Two-point calibration as many times as desired. Each One-point calibration adds a different offset to the original Two-point calibration data (if one was already performed).

Calibration Procedures

Note: The controller should be powered at least 15 minutes before calibration to assure the electronic circuits are at operating temperature. To perform One and Two-point calibrations on the remote sensor input the unit must be in the remote sensor mode. Messages will end with CAL 1 for internal probe calibrations and CAL 2 for remote sensor calibrations.

Self-Cal: The controller must be deactivated (displaying OFF) to access this mode. Press SETPT followed by ENTER to Self-Cal the internal probe input. The message “S-CAL 1” will be followed by “done”. To Self-CAL the sensor input press SENSOR followed by ENTER. The message “S-CAL 2” followed by “done” will be displayed.

Two-point: For high accuracy measurements the controller input can be calibrated at two points. These two points (one high, one low) should be as far apart as practical for good performance.



Do not pick points that are outside the safe operating limits of the fluid in your application. For example with a water bath, 5°C and 90°C would be typical calibration points.

Before a Two-point cal, Self-cal must be performed on the desired sensor input.

With the controller on and measuring from the internal or remote probe, depending on which sensor is being calibrated, set the controller setpoint to the desired high cal temperature. When the bath reaches the setpoint and stabilizes, measure the actual bath temperature with an external calibrated thermometer. Press in quick succession “2” “.” “ENTER”. The message H-CAL # will appear followed by the flashing setpoint. Now enter in the actual bath temperature as measured by the calibrated thermometer and press ENTER. The Main display will indicate the temperature of the bath fluid (the calibrated temperature will not appear until the next step is complete).

Next set the controller setpoint to the desired low cal temperature. When the bath reaches this setpoint and stabilizes, measure the actual bath temperature with an external calibrated thermometer. Press in quick succession “2” “.” “ENTER”. The message L-CAL # will appear followed by the flashing setpoint. Now enter in the actual bath temperature as measured by the calibrated thermometer and press ENTER. The Main display will now indicate the calibrated temperature of the fluid in the bath.

One-point: Before a One-point cal, Self-cal or Two-point cal must be performed on the desired sensor.

With the controller on, and measuring from the internal or remote probe, depending on which sensor is being calibrated, set the controller setpoint to the desired temperature. When the bath reaches this setpoint and stabilizes, measure the actual bath temperature with an external calibrated thermometer. Press in quick succession “1” “.” “ENTER”. The message 1-CAL # will appear followed by the flashing setpoint. Now enter in the actual bath temperature as measured by the calibrated thermometer and press ENTER. The display will now show the calibrated temperature and all temperatures will have this offset added to them.

Calibration clear: At any point the calibration data from a One or Two-point cal can be erased by quickly pressing “2” “.” “CLEAR”. This procedure clears the calibration data only for the selected probe.

High Temperature/ Low Liquid Level Safety

To protect your application, the adjustable High Temperature/Low Liquid Level Safety (HIGH TEMP/LOW LEVEL) ensures the heater will not exceed temperatures which can cause serious damage to your unit. A single temperature sensor, located on the heater coils in the bath, monitors both conditions. A High Temperature/Low Liquid Level fault occurs when the temperature of the sensor exceeds the set temperature limit.

In the event of a fault, the unit will shut down. The cause of the fault must be identified and corrected before the unit can be restarted.

The safety is not pre-set and must be adjusted during initial installation.

To set the safety, locate the HIGH TEMP/LOW LEVEL SAFETY adjustment dial on the right side of the pump box. Turn the dial fully clockwise and press the red RESET switch. The RESET switch is located next to the adjustment dial. On units without reset, cycle the unit's power switch.

Start the unit. Adjust the setpoint for a few degrees higher than the highest desired fluid temperature and allow the bath to stabilize at the temperature setpoint. Turn the HIGH TEMP/LOW LEVEL SAFETY dial counter-clockwise until you hear a click and the unit shuts down. The red FAULT LED on the temperature controller will light to indicate a fault has occurred.

Cool the bath and then, without moving the adjustment dial, press the red RESET switch or cycle the power switch.

NOTE: The minimum high temperature safety setting is 50°C.

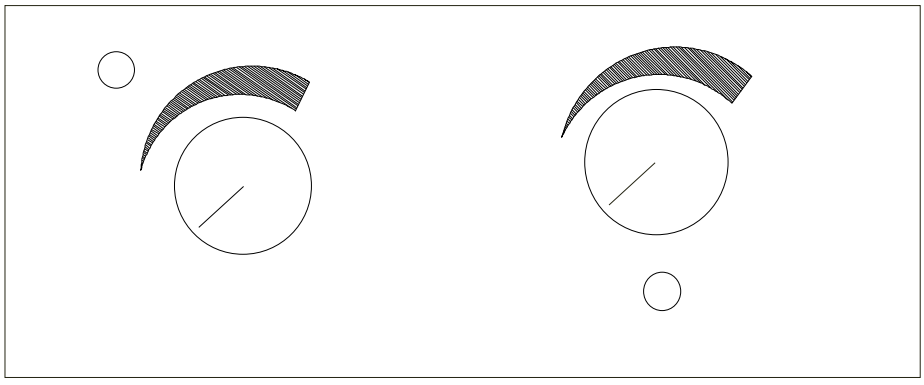

High Temperature/Low Liquid Level Safety(Typical)
(On units without a reset, cycle the unit's power switch)

Section V Maintenance

Service Contracts

Thermo NESLAB offers on-site Service Contracts that are designed to provide extended life and minimal down-time for your unit. For more information, contact our Service Department (see Preface, After-sale Support).

Condenser

For proper operation, the unit needs to pull substantial amounts of air through a condenser. A build up of dust or debris on the fins of the condenser will lead to a loss of cooling capacity.

Periodic vacuuming of the condenser is necessary. To access the condenser the front grille must be removed.



The unit must be turned off before the front panel is removed.

The unit has a two piece grille assembly. First remove the left (blue-colored) section by simply pulling it forward. Pull forward on the remaining (white-colored) section to remove it.

The frequency of cleaning depends on the operating environment. After initial installation, we recommend a monthly visual inspection of the condenser. After several months, the frequency of cleaning will be established.

Reservoir Cleaning

Routine cleaning can be achieved by simply sponging down the seamless stainless steel tank with tap water. (Dish washing detergent may be used but the tank must be thoroughly rinsed.)

To gain access to the entire reservoir the pump box and reservoir cover should be removed.

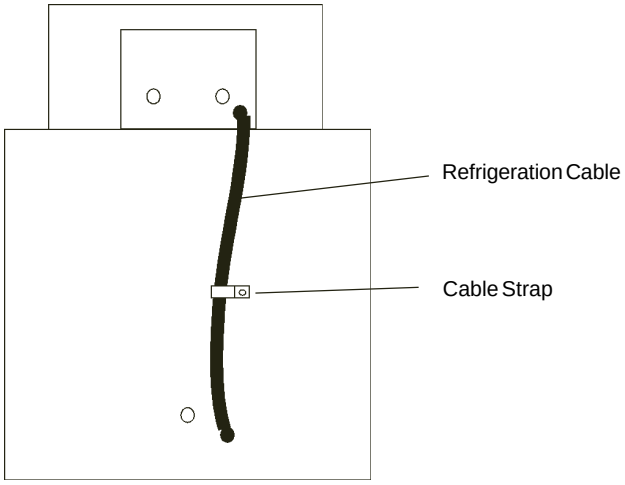

Remove the line cord from the rear of the unit and then remove the four screws (two on each side) securing the reservoir's cover.

To get slack on the refrigeration cable, remove the cable strap. The cable itself does not need to be disconnected.

Turn the cover assembly over and carefully place it on a supporting platform.

Algae

To restrict the growth of algae in the bath, we recommend the bath cover be kept in place and that all circulation lines be opaque. This will eliminate the entrance of light required for the growth of most common algae.

Thermo NESLAB recommends the use of Chloramine-T, 1 gram per 3.5 liters.

Section VI Troubleshooting

Checklist

Unit will not start

Make sure the voltage of the power source meets the specified voltage, ±10%. Refer to the serial number label on the rear of the unit to identify the specific electrical requirements of your unit.

Check the High Temperature/Low Liquid Level Safety. If the FAULT light is on, make sure the fluid level in the bath is between the marks in the baffle and the HIGH TEMP/LOW LEVEL SAFETY setting is greater than the fluid temperature. Push the RESET switch and attempt to restart. On units without a reset, cycle the unit's power switch.

Loss of cooling capacity

Be sure the cooling capacity of the unit has not been exceeded if circulating to an external system.

The refrigeration system is designed to automatically turn off at temperatures above 40°C.

When the unit is shut off, wait approximately five minutes before restarting. This allows time for the refrigeration pressures to equalize. If the pressures are not allowed to equalize, the compressor will short-cycle (clicking sound) and no cooling will occur.

Proper ventilation is required for heat removal. Make sure ventilation through the front and rear panels is not impeded and the panels are free of dust and debris.

Ice build up on the cooling coils can act as insulation and lower the cooling capacity. Raise the temperature of the bath to de-ice the cooling coil and increase the concentration of non-freezing fluid.

No external circulation

Make sure the stainless steel plugs on the PUMP INLET and PUMP OUTLET have been removed.

Check for obstructions, kinks, or leaks in the circulation tubing.

Circulation will cease when the pump head has been exceeded.

No communication between bath's microprocessor and your computer
Ensure the bath's microprocessor parameters (baud rate, parity etc.) match your computer requirements.

Ensure the RS-232 light is on steady. See Appendix A for details. **NOTE:** You cannot input data from the keypad when the RS-232 mode is enabled.

Check the cable. The microprocessor reads data on pin 2 and transmit data on pin 3. Ensure the cable is correctly connected. Computer 25-pin and 9-pin communication ports usually have different conventions.

Ensure the only pins connected to the microprocessor are 2, 3 and 5. All other pins must *not* be connected.

Keypad locked up
When communication is enabled, or a program is running, data entry and many keypad functions are disabled. This is normal operation. If necessary, remove computer cable. Turn off the bath using the main power switch on the side of the unit. While holding the "0" button on the keypad, turn the unit back on. The Main Display will read OFF.

This will also restore the factory preset PID values and also reset the communication parameters and buffer. See Restoring Factory Preset Values on page 21.

Service Assistance and Technical Support

If, after following these troubleshooting steps, your unit fails to operate properly, contact our Customer Service Department for assistance (see Preface, After-sale Support). Before calling, please obtain the following information:

BOM number
Serial number
Voltage of unit
Voltage of power source

In addition to arranging warranty service, our Service Department can provide you with a wiring diagram and a complete list of spare parts for your unit. Before calling, please obtain the following information:

BOM number
Serial number

Appendix A
RS-232 Operation and Remote Programming

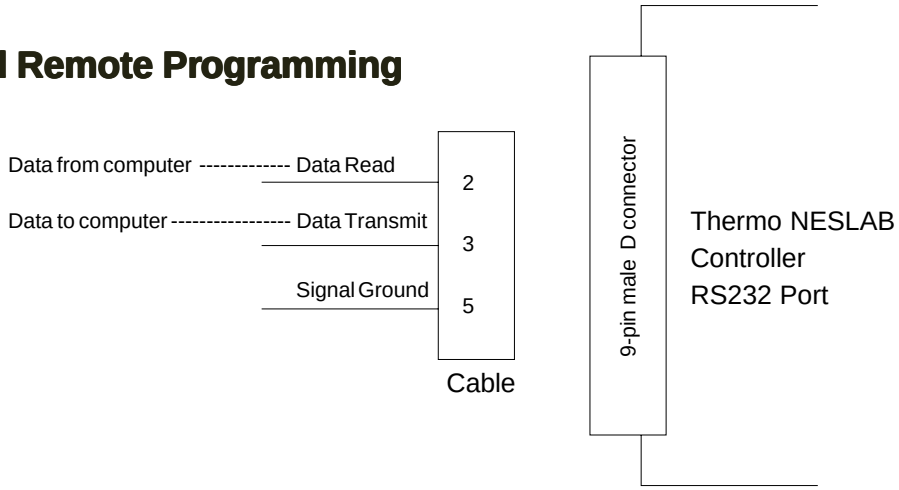

The unit can be controlled through your computer's serial port by using a standard 9-pin RS232 connection on the rear of the temperature controller. Data transmit of the serial port connects to data read (pin 2) of the bath. Data read of the serial port connects to the data transmit (pin 3) of the bath.

NOTE: Do not use a cable that connects to the unused pins on the bath communications port. This may cause a communication fault. Communication cables are available from Thermo NESLAB. Contact our sales department for additional information.

With a cable properly connected to the controller press RS232, the RS232 LED will start to flash. Press ENTER while the LED is flashing and the RS232 LED will come on steady indicating your computer's serial port can control the unit's operation.

In this mode of operation you cannot manually input data with the keypad. You can, however, observe the setpoint and/or alarm temperature limits by pressing the appropriate button on the controller. Your computer can be used to operate all modes of operation.

NOTE: When serial communication is enabled, and a temperature program is running, no keypad operations are allowed.

Communication Commands

All commands must be entered in the exact format shown in the following four tables. Do not send a [LF] (line feed) after the [CR]. Ensure the specified letter case is used. The tables on the next few pages show all commands available, their format and responses. Controller responses are either the requested data, an exclamation point (!) if the command was properly executed, or a question mark (?) if the controller could not execute the command. A question mark response indicates either an improper command format or an attempt to enter settings that are outside the allowable range.

NOTE: All responses from the bath are terminated with a single [CR] only. Wait for your computer to respond before sending the next command.

If you are using the Thermo NESLAB DeltaTemp communication software you must set up the bath controller for: 300 baud, 8 data bits, 2 stop bits and no parity. The bath controller will only support the programming features of DeltaTemp and will ignore the various output controls.

TABLE 1 GENERAL COMMANDS

Command Echo Echo: i = 1, No echo: i = 0 (control returns commands)	SEi[CR]
Set Setpoint -30.00 to +150.00°C or -22.00 to +300.00°F	SSxxx.xx[CR]
Read Setpoint	RS[CR]
Read Main Probe Temperature	RT[CR]
Read Remote Probe Temperature	RR[CR]
Turn Control On or Off On: i = 1, Off: i = 0	SOi[CR]
Set Power Status Flag Set: i = 1, Reset i = 0 (reset when controller power is lost)	SWi[CR]
Read Power Status Flag	RW[CR]
Read F or C Units	RU[CR]

TABLE 2 ALARM COMMANDS

Set High Alarm Limit Same range as setpoint	SHxxx.xx[CR]
Read High Alarm Limit	RH[CR]
Set Low Alarm Limit Same range as setpoint	SLxxx.xx[CR]
Read Low Alarm Limit	RL[CR]
Read Alarm Status Returns: 0 = no alarm, 1 = alarm	RF[CR]

TABLE 3 CONTROL COMMANDS

Set Proportional Bandwidth 0.10 to 10.00 % of full scale	SPxx.xx[CR]
Read Proportional Bandwidth	RP[CR]
Set Integral Compensation 0.00 to 10.00 repeats/minute	SIxx.xx[CR]
Read Integral Compensation	RI[CR]
Set Derivative Compensation 0.00 to 1.00 minutes	SDx.xx[CR]
Read Derivative Compensation	Rd[CR]
Main/Remote Probe Selection Main: i = 0, Remote: i = 1	Sri[CR]
Compressor Inhibit Inhibit: i = 0, Enable: i = 1	SCi[CR]

TABLE 4 PROGRAMMING COMMANDS

Set Step Setpoint n = step number	SYn,xxx.xx<[CR]
Read Step Setpoint	RYn[CR]
Set Step Period n = step number	SXn,xxx.xx[CR]
Read Step Period	RXn[CR]
Read Number of Steps	Rs[CR]
Set Number of Loops 0 to 9999 additional loops after first program execution	SKxxxx[CR]
Read Number of Loops	RK[CR]
Set Hold Status Hold: i = 1, No hold: i = 0	SZi[CR]
Pause/Resume Program Resume: i = 1, Pause: i = 0	SGi[CR]
End Program	SR[CR]
Read Elapsed Step Time	RE[CR]
Select Program Number	SVx[CR]
Read Selected Program Number	RV[CR]
Read Current Period	RC[CR]
Skip Ahead One Period	SJ[CR]

To set the communications data format the controller must be deactivated (Main display indicates OFF). Press the RS232 button. The word "Baud" will momentarily appear followed by the current baud rate (9600, 4800, 1200, 600 or 300). Use the keypad to enter the desired change, if any. Press ENTER and "db" will momentarily appear followed by the current number of data bits setting. Again, use the keypad to enter any desired change (7 or 8) and then press ENTER. "Sb" will momentarily appear followed by the current number of stop bits (1 or 2). Change, if needed, and press ENTER and "PAr" will momentarily appear followed by the current parity control setting (0 = none, 1 = odd, 2 = even). Change, if needed, and press ENTER.

To manually exit this mode of operation press RS232. The RS232 LED will start to flash. Press the CLEAR button and the RS232 LED will extinguish.

Remote Programming

The bath can be programmed and controlled by a remote computer. Enter step setpoints using the SYn command, time periods using the SXn command, number of loops using the SKxxxx command and number of periods in the program using the Ssn command. Start the program using SG1 and suspend the program using SG0. When the program is finished it will stop automatically. If needed, SR will end the program at any time.

Here is a four setpoint, two loop example:

SV1[CR]	Select program number one
SY1,25.00[CR]	First setpoint = 25.00 degrees
SX1,20.0[CR]	First period = 20.0 minutes
SY2,40.00[CR]	Second setpoint = 40.00 degrees
SX2,60.0[CR]	Second period = 60.0 minutes
SY3,40.00[CR]	Third setpoint = 40.00 degrees
SX3,45.0[CR]	Third period = 45.0 minutes
SY4,25.00[CR]	Fourth setpoint = 25.00 degrees
Ss3[CR]	Program has three periods
SK2[CR]	Execute the program three times total
SG1[CR]	Begin executing program
SG0[CR]	Temporarily suspend the program
SR[CR]	Stop the program before it is finished

See the next page for the communication command protocol.

Communication Command Protocol

The following table lists the communication command protocol for programming the controller via a computer.Use the Ctrl - C key combination to clear the controller receiving buffer if an erroneous character is detected.

FUNCTION	SYNTAX[1]	RETURN MESSAGE[2]
SET SETPOINT	SSxxx.xx[CR]	![CR]
SET LOW LIMIT	SLxxx.xx[CR]	![CR]
SET HIGH LIMIT	SHxxx.xx[CR]	![CR]
SET PROPORTIONAL BAND[3]	SPxx.xx[CR]	![CR]
SET INTEGRAL[4]	SIxx.xx[CR]	![CR]
SET DERIVATIVE[5]	SDx.xx or Sdx.xx[CR]	![CR]
COMPRESSOR INHIBIT	SCi[CR]	![CR]
SET POWER STATUS FLAG	SWi[CR]	![CR]
SET ON/OFF	SOi[CR]	![CR]
SELECT PROGRAM NUMBER	SVx[CR]	![CR]
SET STEP SETPOINT	SYn,xxx.xx[CR]	![CR]
SET STEP PERIOD	SXn,xxx.x[CR]	![CR]
SET NUMBER OF PERIODS	Ssn[CR]	![CR]
SET NUMBER OF LOOPS	SKxxxx[CR]	![CR]
SET HOLD STATUS	SZi[CR]	![CR]
END PROGRAM	SR[CR]	![CR]
ECHO CONTROL[6]	SEi[CR]	![CR]
REMOTE SENSOR CONTROL	Sri[CR]	![CR]
SUSPEND/RESUME PROGRAM	SGi[CR]	![CR]
SKIP AHEAD ONE PERIOD	SJ[CR]	![CR]
READ SETPOINT	RS[CR]	xxx.xx[CR]
READ TEMPERATURE	RT[CR]	xxx.xx[CR]
READ ALARM STATUS	RF[CR]	![CR]
READ REMOTE TEMPERATURE	RR[CR]	xxx.xx[CR]
READ UNITS	RU[CR]	C[CR] or F[CR]
READ CURRENT PERIOD	RC[CR]	xx[CR]
READ ELAPSED TIME	RE[CR]	xxx.x[CR]
READ LOW LIMIT	RL[CR]	xxx.xx[CR]
READ HIGH LIMIT	RH[CR]	xxx.xx[CR]
READ PROPORTIONAL BAND	RP[CR]	xx.xx[CR]
READ INTEGRAL	RI[CR]	xx.xx[CR]
READ DERIVATIVE	Rd[CR]	x.xx[CR]
READ PROGRAM NUMBER	RV[CR]	x[CR]
READ STEP SETPOINT	RYn[CR]	xxx.xx[CR]
READ STEP PERIOD	RXn[CR]	xxx.x[CR]
READ NUMBER OF STEPS	Rs[CR]	x[CR]
READ NUMBER OF LOOPS	RK[CR]	xxxx[CR]
READ POWER STATUS	RW[CR]	x[CR]

1. x = ASCI digit, i = 0 (OFF or STOP) i = 1 (ON or GO), n = step number.
2. Ensure the return message is correct. If not, resend or troubleshoot communication lines.
3. Factory preset at 0.6%.
4. Factory preset at 0.25 repeats per minute.
5. Factory preset at 0.05 minutes.
6. Allows computer to compare send signal to receive signal.

Appendix B
PROGRAMMING SOFTWARE

NEScom Software

The NEScom Communications Software is a user friendly software that allows you to automate your temperature control process. The software includes a 3½" disk, comprehensive operator's manual and a toll-free number to a trained technical staff.

NEScom Software allows you to write custom temperature programs for our Digital or Microprocessor based temperature control apparatus. Choose upper or lower temperature limits and monitor system status with an alarm. NEScom can also record your results on a user selectable graph. NesCom must be used with an IBM or 100% compatible computer.

Select from easy to use product icons.

Create graphs and charts.

Easily configure ramping functions which set the setpoint over time.

View pop-up alarm windows which display if an alarm condition occurred.

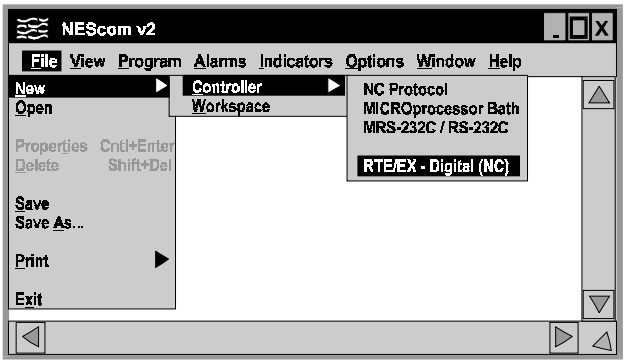

Select software functions from the easy to use pulldown menus.

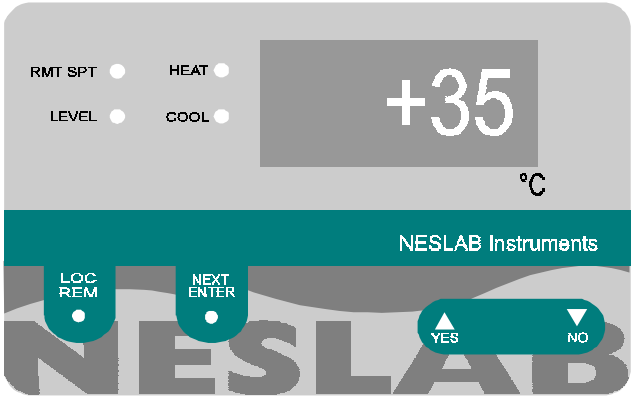

View a virtual controller screen which allows remote monitoring and operation of product control panel.

WARRANTY

Thermo NESLAB Instruments, Inc. warrants for 12 months from date of shipment any Thermo NESLAB unit according to the following terms.

Any part of the unit manufactured or supplied by Thermo NESLAB and found in the reasonable judgment of Thermo NESLAB to be defective in material or workmanship will be repaired at an authorized Thermo NESLAB Repair Depot without charge for parts or labor. The unit, including any defective part must be returned to an authorized Thermo NESLAB Repair Depot within the warranty period. The expense of returning the unit to the authorized Thermo NESLAB Repair Depot for warranty service will be paid for by the buyer. Thermo NESLAB's responsibility in respect to warranty claims is limited to performing the required repairs or replacements, and no claim of breach of warranty shall be cause for cancellation or recision of the contract of sales of any unit.With respect to units that qualify for field service repairs, Thermo NESLAB's responsibility is limited to the component parts necessary for the repair and the labor that is required on site to perform the repair. Any travel labor or mileage charges are the financial responsibility of the buyer.

The buyer shall be responsible for any evaluation or warranty service call (including labor charges) if no defects are found with the Thermo NESLAB product.

This warranty does not cover any unit that has been subject to misuse, neglect, or accident. This warranty does not apply to any damage to the unit that is the result of improper installation or maintenance, or to any unit that has been operated or maintained in any way contrary to the operating or maintenance instructions specified in Thermo NESLAB's Instruction and Operation Manual. This warranty does not cover any unit that has been altered or modified so as to change its intended use.

In addition, this warranty does not extend to repairs made by the use of parts, accessories, or fluids which are either incompatible with the unit or adversely affect its operation, performance, or durability.

Thermo NESLAB reserves the right to change or improve the design of any unit without assuming any obligation to modify any unit previously manufactured.

THE FOREGOING EXPRESS WARRANTY IS IN LIEU OF ALL OTHER WARRANTIES, EXPRESSED OR IMPLIED, INCLUDING BUT NOT LIMITED TO WARRANTIES OR MERCHANTABILITY AND FITNESS FOR A PARTICULAR PURPOSE.

Thermo NESLAB'S OBLIGATION UNDER THIS WARRANTY IS STRICTLY AND EXCLUSIVELY LIMITED TO THE REPAIR OR REPLACEMENT OF DEFECTIVE COMPONENT PARTS AND Thermo NESLAB DOES NOT ASSUME OR AUTHORIZE ANYONE TO ASSUME FOR IT ANY OTHER OBLIGATION.

Thermo NESLAB ASSUMES NO RESPONSIBILITY FOR INCIDENTAL, CONSEQUENTIAL, OR OTHER DAMAGES INCLUDING, BUT NOT LIMITED TO LOSS OR DAMAGE TO PROPERTY, LOSS OF PROFITS OR REVENUE, LOSS OF THE UNIT, LOSS OF TIME, OR INCONVENIENCE.

This warranty applies to units sold in the United States. Any units sold elsewhere are warranted by the affiliated marketing company of Thermo NESLAB Instruments, Inc. This warranty and all matters arising pursuant to it shall be governed by the law of the State of New Hampshire, United States. All legal actions brought in relation hereto shall be filed in the appropriate state or federal courts in New Hampshire, unless waived by Thermo NESLAB.

RTE-200 & RTE-300
Refrigerated
Baths/Circulators

NESLAB Manual P/N U00094
Rev. 03/05/97

Instruction and Operation Manual

NESLAB online

Product Service Information, Electronic Catalog,
Applications Notes, MSDS Forms, e-mail.

(603)427-2490

Set modem to 8-N-1 protocol, 1200 - 14400 baud

Voice Info: (800) 4-NESLAB

Comments on this manual can be sent to:

NESLAB@lifesciences.com

or visit our Web page at:

http://www.neslabinc.com



RTE-200 & RTE-300 Refrigerated Circulator Instruction and Operation Manual

Table of Contents

Preface

Compliance 2
Unpacking 2
Warranty 2
After-Sale Support 2

Safety

Warnings 3

General Information

Description 4
Specifications 4

Installation

Site 5
Electrical Requirements 5
Plumbing Requirements 6
Fluids 7
Filling Requirements 7

Controllers

Controllers 8
Start Up 8
Digital Controller 8
Microprocessor Controller 13
RS-232 Serial Communications Report 21
High Temperature/Low Liquid Level Safety 22
DB9 Connector Pinouts 23

Maintenance & Troubleshooting

Cleaning 24
Algae 24
Checklist 24

Warranty

Warranty 26

Preface

Compliance

Products tested and found to be in compliance with the requirements defined in the EMC standards defined by 89/336/EEC as well as Low Voltage Directive (LVD) 73/23/EEC can be identified by the CE label on the rear of the unit. The testing has demonstrated compliance with the following directives:

LVD, 73/23/EEC	Complies with UL 3101-1:93
EMC, 89/336/EEC	EN 55011, Class A Verification EN 50082-1:1992 IEC 1000-4-2:1995 IEC 1000-4-3:1994 IEC 1000-4-4:1995

For any additional information refer to the Letter of Compliance that shipped with the unit (Declaration of Conformity).

Unpacking

Retain all cartons and packing material until the unit is operated and found to be in good condition. If the unit shows external or internal damage, or does not operate properly, contact the transportation company and file a damage claim. Under ICC regulations, this is your responsibility.

Warranty

Units have a warranty against parts and workmanship for one full year from date of shipment. See back page for more details.

After-sale Support

NESLAB is committed to customer service both during and after the sale. If you have questions concerning the operation of your unit, contact our Sales Department. If your unit fails to operate properly, or if you have questions concerning spare parts or Service Contracts, contact our Service

Department. Before calling, please obtain the following information from the unit's serial number label:

- *BOM number* _____
- *Serial number* _____

Safety

Warnings

Make sure you read and understand all instructions and safety precautions listed in this manual before installing or operating your unit. If you have any questions concerning the operation of your unit or the information in this manual, contact our Sales Department.

Performance of installation, operation, or maintenance procedures other than those described in this manual may result in a hazardous situation and may void the manufacturer's warranty.

Transport the unit with care. Sudden jolts or drops can damage the refrigeration lines.

Observe all warning labels.

Never remove warning labels.

Never operate damaged or leaking equipment.

Never operate the unit without fluid in the circulator.

Use tap water unless operating above 80°C. Above 80°C use Dow 200 silicon oil.

For 220-240 volt units supplied without a line cord, use a harmonized (HAR) grounded 3-conductor cord, type H05VV-F. A suitable cord end is needed for connecting to the equipment (see unit socket) and must terminate with an IEC approved plug for proper power supply connection.

Always turn off the unit and disconnect the line cord from the power source before performing any service or maintenance procedures, or before moving the unit.

Always empty the circulator before moving the unit.

Never operate equipment with damaged line cords.

Refer service and repairs to a qualified technician.

In addition to the safety warnings listed above, warnings are posted throughout the manual. These warnings are designated by an exclamation mark inside an equilateral triangle with text highlighted in bold print. Read and follow these important instructions. Failure to observe these instructions can result in permanent damage to the unit, significant property damage, personal injury or death.

General Information

Description

The RTE Refrigerated Circulators are designed to provide temperature control for applications requiring a fluid work area or pumping to an external system.

The units consist of a circulation pump, stainless steel reservoir, a work area cover, and a temperature controller.

Specifications

	RTE-200	RTE-300
Temperature Range °C[1] *Digital* *Programmable*	-20 to +200 -20 to +200	-30 to +200 -30 to +200
Temperature Stability[2]	±0.01	
Pumping Capacity	12 lpm at 0' (0 M) 0 lpm at 7' (2 M)	
Cooling Capacity[1] *@+20°C* *@ 0°C* *@ -10°C* *@ -20°C*	175 watts 100 watts 75 watts N/A	545 watts[4] 400 watts N/A 165 watts
Heater Watts	1000 @ 230V	
Circulator Work Area (L x W x D) *Inches* *Centimeters*	5¼ x 8 x 5½ 13.3 x 20.3 x 14.0	5¼ x 9 x 8 13.3 x 22.9 x 20.3
Reservoir Volume *Gallons* *Liters*	1½ 6	3 7/16 13
Case Dimensions *(L x W x D)* *Inches* *Centimeters*	15¾ x 9¼ x 21¼ 40.0 x 23.3 x 54	17 5/8 x 15 x 26 44.8 x 38.1 x 66.0
Unit Weight *Pounds* *Kilograms*	73 33	120 54

1. Low-end temperatures and cooling capacities achieved using a fluid with a specific gravity of 0.5.
2. Stability is measured at fluid temperature of 20°C, ambient of 20°C, with tap water as the fluid and not in maximum cooling mode.
3. Pumping capacity for units operating at fluid temperature of 20°C, ambient of 21°C, with tap water as the fluid.
4. 20°C heat load data taken in maximum cooling mode.

Installation

Site



Never place the unit in a location where excessive heat, moisture, or corrosive materials are present.

Locate the unit on a sturdy table or bench top. Ambient temperatures should be inside the range of +50°F to +89.6°F (+10°C to +32°C).

The unit has an air-cooled refrigeration system. Air is drawn through the front panel and discharged through the rear panel. The unit must be positioned so the air intake and discharge are not impeded. A minimum clearance of 12 inches (30 centimeters) at the front and rear of the unit is necessary for adequate ventilation. Inadequate ventilation will reduce cooling capacity and, in extreme cases, can cause compressor failure.

Excessively dusty areas should be avoided and a periodic cleaning schedule should be instituted (see Cleaning).

Electrical Requirements



Line voltage may be easily accessible inside the pump/control box. Always unplug the unit prior to removing the pump/control box cover.



The unit construction provides extra protection against the risk of electric shock by grounding appropriate metal parts. The extra protection may not function unless the power cord is connected to a properly grounded outlet. It is the user's responsibility to assure a proper ground connection is provided.



For 220 - 240 volt units supplied without a line cord, use a harmonized (HAR) grounded 3-conductor cord, type H 0 5 V V - F . A suitable cord end is required for connecting to the equipment (see unit socket) and must terminate with an IEC approved plug for proper connection to power supply.

Refer to the serial number label on the rear of the unit to identify the specific electrical requirements of your unit.

Ensure the voltage of the power source meets the specified voltage, ±10%.

Plumbing Requirements



Ensure the unit is off before connecting tubing to the unit.

Hose Connections

The pump connections are located at the rear of the pump box and are labelled INLET and OUTLET. The connections are capped with stainless steel serrated plugs.

The pump lines have ¼ inch male pipe threads for mating with standard plumbing fittings. For your convenience two stainless steel adapters, ¼ inch female pipe thread to 3/8 inch O.D. serrated fitting, are provided. (To assure proper fit, they should be installed using Teflon® tape around the threads.)

Flexible tubing, if used, should be of heavy wall or reinforced construction. Make sure all tubing connections are securely clamped. Avoid running tubing near radiators, hot water pipes, etc. If substantial lengths of tubing are necessary, insulation may be required to prevent loss of cooling capacity.

It is important to keep the distance between the unit and the external system as short as possible, and to use the largest diameter tubing practical. Tubing should be straight and without bends. If diameter reductions must be made, make them at the inlet and outlet of the external system, not at the unit.

If substantial lengths of cooling lines are required, they should be pre-filled with bath fluid before connecting them to the unit. This will ensure that a adequate amount of fluid will be in the circulator once it is in operation.

Pumping

The pump is designed to deliver a flow of 12 liters/minute at 0 feet head. To prevent external circulation, the INLET and OUTLET lines are capped. The caps must be removed when external circulation is required.

To properly secure the external hose connections to the unit, wrap Teflon® tape around the pipe line threads before installation. Once the hose connections are made, the pump must be properly plumbed to an external system. *It is important the circulator is not in operation until all plumbing is complete.*

If the circulator is not used for external circulation, make sure the stainless steel caps are in place prior to operating the circulator.

Fluids



Never use flammable or corrosive fluids with this unit.

Tap water is the recommended fluid for operation from 7°C to +80°C.

Above +80°C, Dow 200® silicon oil is recommended.

For operation below 7°C, a 50/50 mixture, by volume, of tap water and laboratory grade ethylene glycol is suggested.



Never use pure ethylene glycol as a fluid. A minimum 80/20 mixture of Ethylene Glycol and tap water is allowed.

Filling Requirements

The circulator work area has a high and low level marker to guide filling. The markers are 1 inch horizontal slits located in the center of the stainless steel baffle separating the work area and the pump assembly. The correct fluid level falls between these two markers. The heating and cooling coils will be exposed and may become damaged if the correct fluid level is not provided.

When pumping to an external system, keep extra fluid on hand to maintain the proper level in both the circulating lines and external system.



Never run the unit when the work area is empty.

Controllers

Controllers

Two temperature controllers are available with the unit: Digital and Microprocessor. This section explains the installation and operation of each.

Start Up

Before starting the unit, check all electrical and plumbing connections and make sure the work area has been properly filled with fluid.

To start any unit place the I/O switch on the side of the controller to the **I** (power on) position. The pump will start and the controller display will light.

NOTE: When the unit is shut off, wait approximately five minutes before restarting. This allows time for the refrigeration pressures to equalize. If the pressures are not allowed to equalize, the compressor will short-cycle (clicking sound) and no cooling will occur.

Digital Controller

The digital controller consists of a seven-segment LCD Main Display with contrast control, heating/cooling status indicators, a four-button keypad and user adjustable 0.1° or 0.01° display resolution. It also features on/off refrigeration control, automatic min/max refrigeration control, audio/visual alarm messages, user selected high/low temperature limits and a user-adjustable Proportional, Integral and Derivative (PID) control.

NOTE: The refrigeration turns off when operating above 35°C.



Main Display

The LCD Main Display normally indicates the fluid temperature as well as the current setpoint temperature.

Key Button Definition

SET is used to change the current value or status of a function within the software.

ENTER is used to "accept" the new value or function.

YES is used to confirm a question asked within the software.

NO is used to reject or change a function with in the software.

NEXT is used as a means to quickly scroll through the software loops and settings.

The up and down arrow keys are used to change a numeric value.

Changing Setpoint

To change the setpoint, press **SET**. The current setpoint will flash. Use the keys to change the setpoint. Scrolling includes three speed acceleration. Press **ENTER** to accept the new setpoint. **NOTE:** If you do not press **ENTER**, a time out will occur 30 seconds after the last key is pressed and the old setpoint will be used.

Setup Loop

The setup loop is used to enable cooling, change the display resolution, change the temperature scale, change temperature limits and adjust the PID control.

To enter the setup loop, press and hold **NEXT** for three seconds. The display will indicate SETUP LOOP? **NOTE:** Pressing **NO** will display the software version number and then return to the Main Display. A time out will occur 60 seconds after the last key is pressed and the display will revert to the Main Display.

Press **NEXT** or **YES** to display COOLING ENABLED PRESS NO TO CHANGE. Press **NO** to toggle between cooling enable and disable.

Press **NEXT** to display RESOLUTION = 0.01 PRESS NO TO CHANGE. Press **NO** to toggle the resolution between 0.1° and 0.01° resolution.

Press **NEXT** to display UNITS ARE C PRESS NO TO CHANGE. Press **NO** to toggle the scale between Fahrenheit (F), Celsius (C) or a user (U) scale.

NOTE: The following is displayed only if a user (U) scale was selected. Press **NEXT** to display U = K1(C + K2) + K3 Kn=xxx.x. Press **SET** and then use the arrow keys to change the K values.

Press **NEXT** to display HIGH T LIMIT xxx.xxC LOW T LIMIT xxx.xxC. Press **SET** to be able to use the arrow keys to change the high temperature limit. Press **ENTER** to accept the new value. Press **SET** again to be able to change the low temperature limit. Press **ENTER** to accept the new value. **NOTE:** To bypass changing the high temperature value press **SET SET** when HIGH T LIMIT xxx.xxC LOW T LIMIT xxx.xxC is initially display.

NEXT to display ENTER PID CONSTANTS? Press **NO** to bypass changing the constants and display **SAVE SETUP?** Press **YES** or **NEXT** to display **PROPORTIONAL TERM P = xx.x% OF SPAN**. Press **SET** and then use the arrow keys to change the value.

Press **NEXT** to display INTEGRAL TERM I = x.xx REPEATS/MIN. Press **SET** and then use the arrow keys to change the value.

Press **NEXT** to display DERIVATIVE TERM D = x.xx MINUTES. Press **SET** and then use the arrow keys to change the value.

Press **NEXT** to display MAX COOLING DISABLED PRESS NO TO CHANGE. **NOTE:** Applicable to RTE-300 only. RTE-300s are equipped with a min/max cooling solenoid. With large heat loads it may be necessary to enable max cooling. Press **NO** to toggle between modes.

Press **NEXT** to display SAVE SETUP? PRESS YES OR NO. Press **YES** to accept the changes. Press **NO** to ignore them. With either choice the unit will return to the main display.

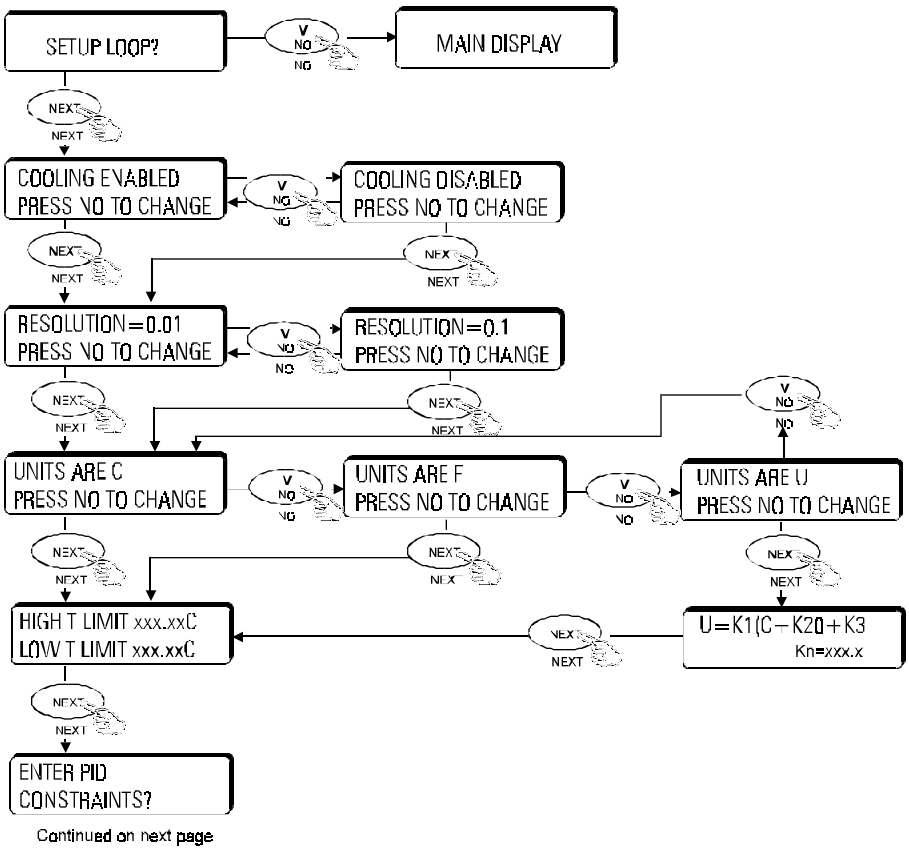

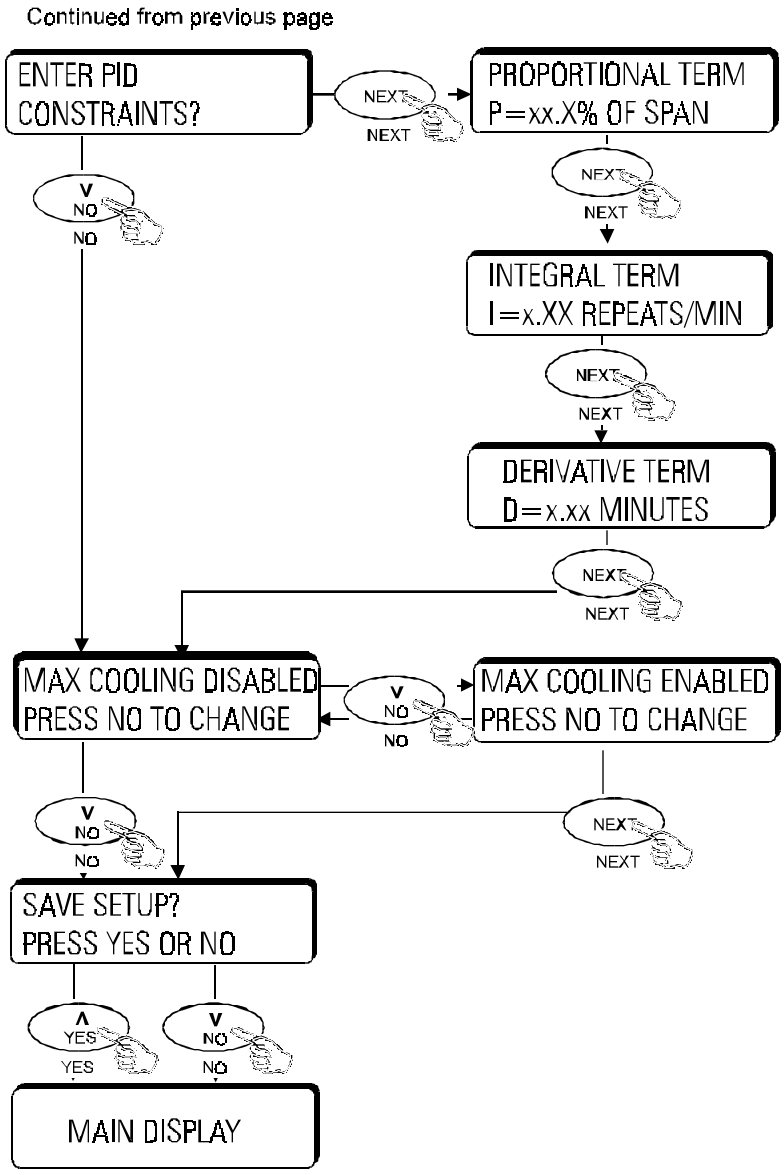
Continued from previous page
ENTER PID CONSTRAINTS?
NEXT
NEXT
PROPORTIONAL TERM P=xx.X% OF SPAN
NEXT
NEXT
INTEGRAL TERM I=x.XX REPEATS/MIN
NEXT
NEXT
DERIVATIVE TERM D=x.xx MINUTES
NEXT
NEXT
V NO
NO
MAX COOLING DISABLED PRESS NO TO CHANGE
V NO
NO
MAX COOLING ENABLED PRESS NO TO CHANGE
V NO
NO
NEXT
NEXT
SAVE SETUP? PRESS YES OR NO
Λ YES
YES
V NO
NO
MAIN DISPLAY

Calibration Loop

Use the calibration loop to calibrate the RTD temperature probe. The wider the temperature spread used, the more accurate the calibration. **NOTE:** Changing the factory set calibration will affect the accuracy of the controller. A time out is not used in this loop.

To enter the calibration loop, from the main display press and hold **NEXT** while pressing, within three seconds, **ENTER - NO - ENTER**. The display will indicate CALIBRATE RTD?

Press NO to return to the main display or press **NEXT** and the display indicates CALIBRATE LOW TEMP? To perform a low temperature calibration press **YES** or **NEXT** and the display will indicate CAL RTD LOW TEMP xxx.xxC. Press **SET** and then use the arrow keys to change

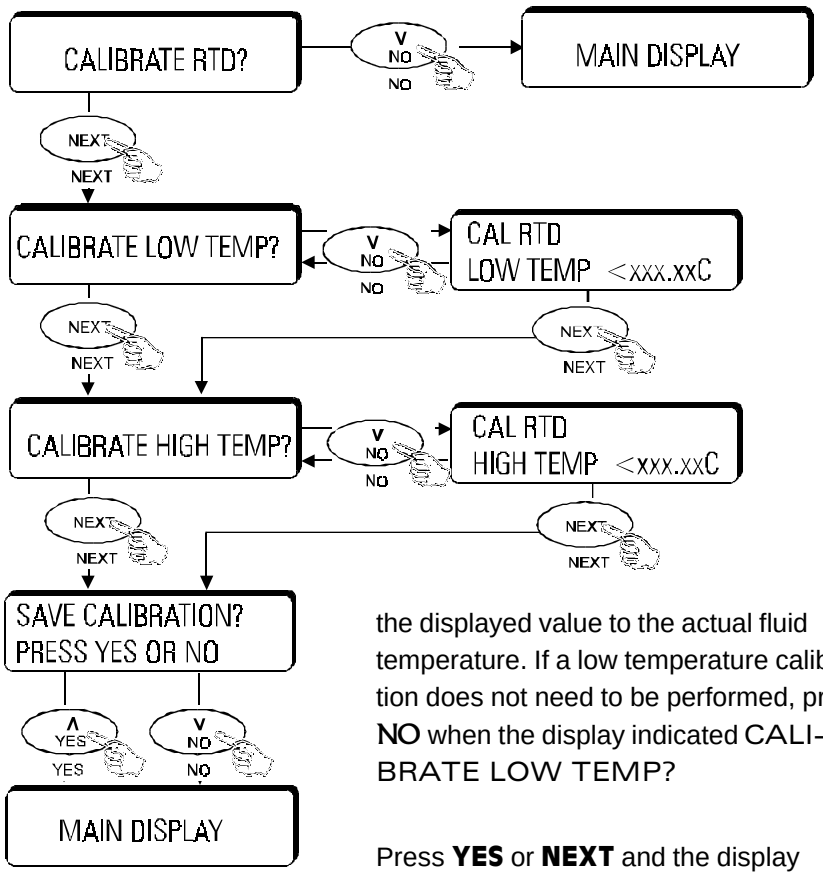

the displayed value to the actual fluid temperature. If a low temperature calibration does not need to be performed, press NO when the display indicated CALIBRATE LOW TEMP?

Press **YES** or **NEXT** and the display indicates CALIBRATE HIGH TEMP? To perform a high temperature calibration press **NEXT** and the display will indicate CAL RTD HIGH TEMP xxx.xxC. Press **SET** and then use the arrow keys to change the displayed value to the actual fluid temperature. If a high temperature calibration does not need to be performed, press NO when the display indicated CALIBRATE HIGH TEMP?

Press **NEXT** and the display will indicate SAVE CALIBRATION PRESS YES OR NO. Press **YES** to save the changes, press NO to ignore them. With either choice the unit will return to the main display.

Microprocessor Controller

The microprocessor controller consists of a seven-segment LCD with contrast control, heating/cooling status indicators, a 12-button keypad and user adjustable 0.1° or 0.01° temperature display resolution, external sensor input with automatic switching in the event of external sensor failure. It also features automatic on/off refrigeration control, automatic min/max refrigeration control, audio/visual alarm messages, automatic fixed temperature limit, user selected high/low temperature limits, programmable temperature profile, RS-232 communication and a user-adjustable Proportional, Integral and Derivative (PID) control.

Main Display

The LCD normally indicates the fluid temperature as well as the current setpoint temperature, or the external temperature and setpoint.

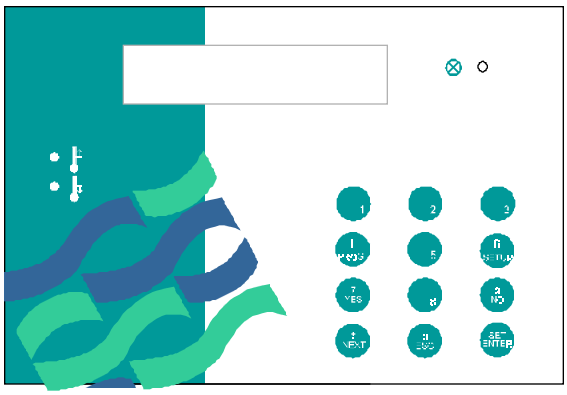

Key Button Definition

SET is used to change the current value or status of a function within the software.
ENTER is used to "accept" the new value or function.

YES is used to confirm a question asked within the software.

NO is used to reject or change a function within the software.

NEXT is used as a means to quickly scroll through the software loops and settings.
± is used to change the current numeric value from positive to negative, or negative to positive.

SETUP is used to enter the controller's setup loop.

PROG is used to enter the controller's program loop.

ESC is used to backtrack to the previous screen within a software loop.

The up and down arrow keys are used to change a numeric value.

1 - 9 keys are used to enter a number.

Changing Setpoint

To change the setpoint, press **SET ENTER**. The current setpoint will flash. If the number to be entered is negative, press the **+/-** key. Otherwise, enter the most significant digit of the number. The digit will appear in the least significant decimal position. As each digit is entered the previously entered digits will shift up in significance. Enter trailing zeros as needed to obtain the desired order of magnitude. Press **SET ENTER** to accept the new setpoint. **NOTE:** If you do not press **SET ENTER**, a time out will occur 30 seconds after the last key is pressed and the old setpoint will be used.

Program Loop

NOTE: The program loop is not accessible if the RS-232 communications is enabled (see Setup Loop on page 16). The program loop is used to program the controller. The controller can store up to two programs, each with as many as ten steps. (Refer to the Setup Loop on the page 16 for other options.)

To enter the program loop, press and hold **PROG** for three seconds. The display will indicate RUN PROGRAM A? **NOTE:** A time out will occur 60 seconds after the last key is pressed and the program will revert to old values and the display will revert to the fluid temperature.

The unit's are not shipped with stored programs. Before a program can be run, it has to be edited and stored. Therefore, for initial programming or program editing press **NEXT** to display RUN PROGRAM B? and then press **NEXT** again to display EDIT PROGRAM A?

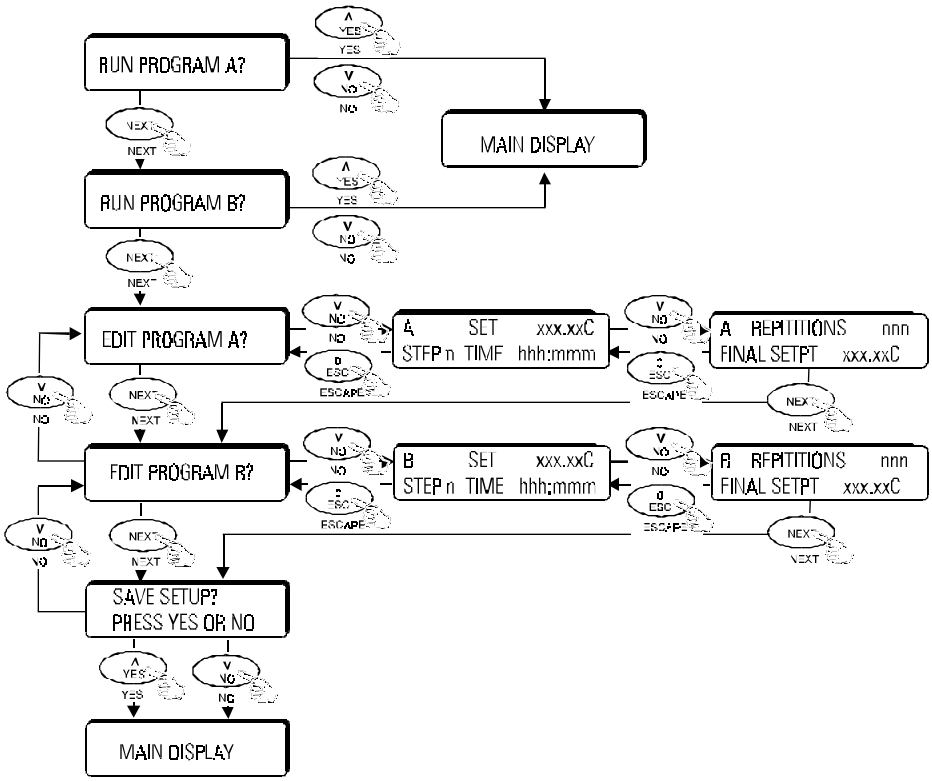

Press **YES** or **NEXT** to display the temperature, step number and time duration. Steps start at 0. Press **SET ENTER** and using the keypad enter the setpoint temperature. Press **SET ENTER**. Press **SET ENTER** and enter the number of hours. Press **SET ENTER**. Press **SET ENTER** and enter the number of minutes. Press **SET ENTER**.

NOTE: Step time starts when the fluid temperature gets within 0.5°C of the current setpoint.

The display will increment to step 1. Repeat the procedure for the total number of desired steps. To skip a number press **SET ENTER** twice. To end a program with fewer than ten steps, enter 0 hours and 0 minutes.

Press **NEXT** to display the number of program repetitions. Press **SET ENTER** and enter the number of reps. Press **SET ENTER**. Press **SET ENTER** and enter the final setpoint for the program. Press **SET ENTER**.

Press **NEXT** to display EDIT PROGRAM B? Use the same procedures.

Press **NEXT** to display SAVE PROGRAMS? Press **YES** to save or **NO** to ignore. The unit returns to the main display.

With program(s) saved, when the display reads RUN PROGRAM pressing **YES** will start the program, pressing **NO** will stop it. With either choice the unit returns to the main display.

Setup Loop

NOTE: The setup loop is not accessible if a program is running. If RS-232 communications is enabled, only the RS-232 portion of the setup loop is active.

The setup loop is used to enable refrigeration, change the display resolution, change the temperature scale, change temperature limits, adjust the PID control, select internal or external probe, enter the maximum internal and external temperature difference and enable RS-232 communications.

To enter the setup loop from the main display, press and hold **SETUP** for three seconds. The display will indicate **SETUP LOOP? NOTE:** A time out will occur 60 seconds after the last key is pressed and the display will revert to the fluid temperature.

Press **YES** or **NEXT** to display **REFRIGERATION OFF WHEN SETPOINT > xxC**. Use the keypad to display the desired temperature.



The refrigeration system is not designed to operate above 35°C.

Press **NEXT** to display **RESOLUTION = 0.01 PRESS NO TO CHANGE**. Press **NO** to toggle between 0.1°C and 0.01°C display resolution, press **YES** or **NEXT** to maintain the displayed resolution.

Press **NEXT** to display **UNITS ARE C PRESS NO TO CHANGE**. Press **NO** to toggle between temperature scales Celsius (C), Fahrenheit (F) and a user defined (U) scale. Press **YES** or **NEXT** to maintain the displayed scale.

NOTE: The following is displayed only if a user (U) scale was selected. Press **NEXT** to display **U = K1(C + K2) + K3 Kn=xxx.x**. Press **SET ENTER** and use the keypad to change the values.

Press **NEXT** to display **HIGH T LIMIT xxx.xxC LOW T LIMIT xxx.xxC**. Press **SET ENTER** and enter the high temperature limit. Press **SET ENTER** to accept the new value. Press **SET ENTER** again to be able to change the low temperature limit. Press **SET ENTER** to accept the new value. **NOTE:** To bypass changing the high temperature value press **SET ENTER** twice when **HIGH T LIMIT xxx.xxC LOW T LIMIT xxx.xxC** is initially display.

Press **NEXT** to display **ENTER PID CONSTANTS?** Press **NO** to bypass changing the constants and display **PROBE IS INTERNAL PRESS NO TO CHANGE** or press **NEXT** to display **PROPORTIONAL TERM P = xx.x% OF SPAN**. Press **SET ENTER** and use the keypad to enter the desired value.

Press **NEXT** to display **INTEGRAL TERM I = x.xx REPEATS/MIN**. Press **SET ENTER** and use the keypad to enter the desired value.

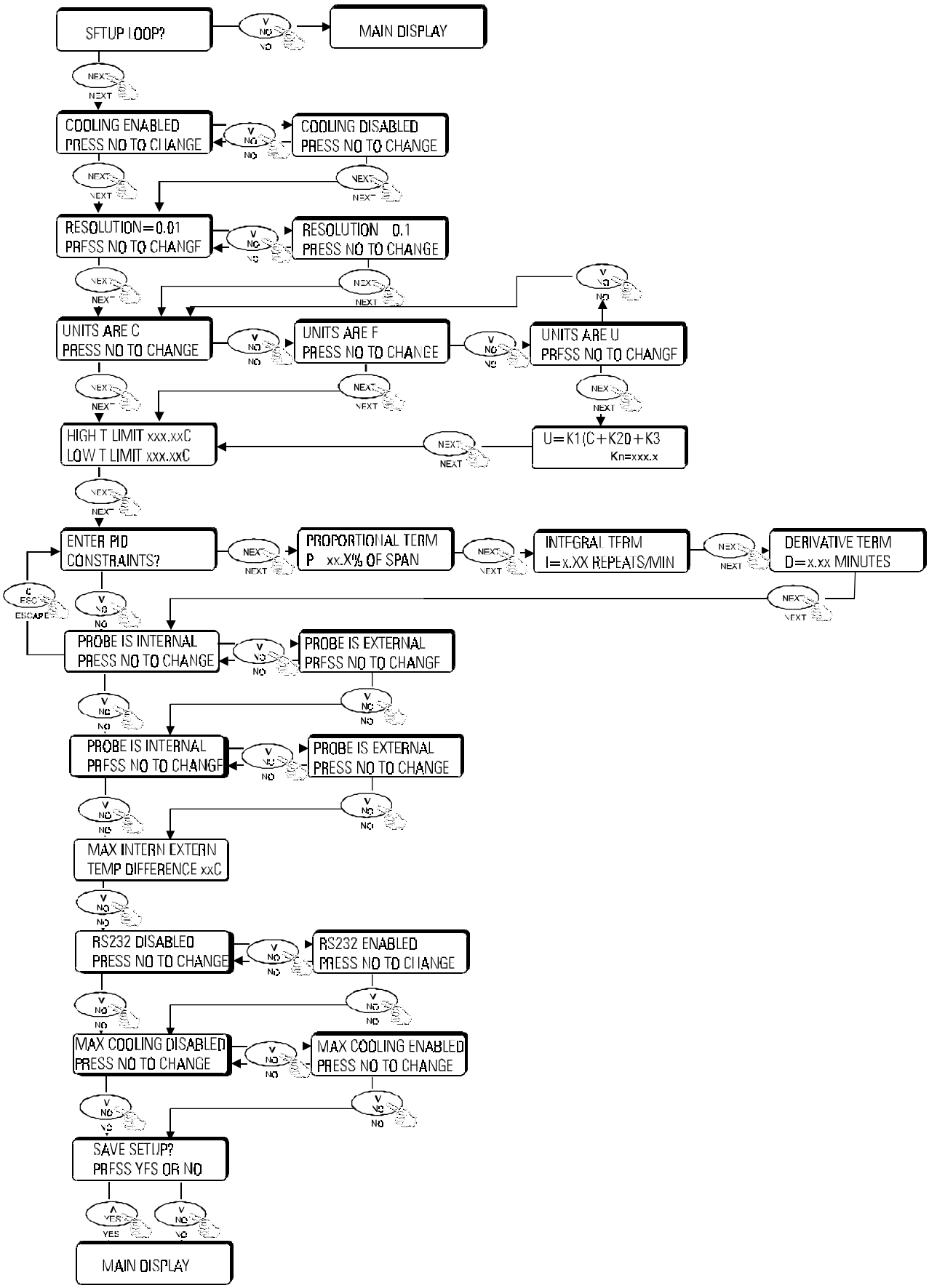
SETUP LOOP?
MAIN DISPLAY
COOLING ENABLED
PRESS NO TO CHANGE
COOLING DISABLED
PRESS NO TO CHANGE
RESOLUTION=0.01
PRESS NO TO CHANGE
RESOLUTION 0.1
PRESS NO TO CHANGE
UNITS ARE C
PRESS NO TO CHANGE
UNITS ARE F
PRESS NO TO CHANGE
UNITS ARE U
PRESS NO TO CHANGE
HIGH T LIMIT xxx.xxC
LOW T LIMIT xxx.xxC
U=K1(C+K2)+K3
Kn=xxx.x
ENTER PID
CONSTRAINTS?
PROPORTIONAL TERM
P xx.X% OF SPAN
INTEGRAL TERM
I=x.XX REPEATS/MIN
DERIVATIVE TERM
D=x.xx MINUTES
ESCAPE
PROBE IS INTERNAL
PRESS NO TO CHANGE
PROBE IS EXTERNAL
PRESS NO TO CHANGE
PROBE IS INTERNAL
PRESS NO TO CHANGE
PROBE IS EXTERNAL
PRESS NO TO CHANGE
MAX INTERN EXTERN
TEMP DIFFERENCE xxC
RS232 DISABLED
PRESS NO TO CHANGE
RS232 ENABLED
PRESS NO TO CHANGE
MAX COOLING DISABLED
PRESS NO TO CHANGE
MAX COOLING ENABLED
PRESS NO TO CHANGE
SAVE SETUP?
PRESS YES OR NO
MAIN DISPLAY

Press **NEXT** to display DERIVATIVE TERM D = x.xx MINUTES. Press **SET ENTER** and use the keypad to enter the desired value.

Press **NEXT** to display **PROBE IS INTERNAL PRESS NO TO CHANGE**. Press NO to toggle between internal or external probe or press **YES** or **SET ENTER** to use the displayed probe.

Press **NEXT** to display MAX INTERN EXTERN TEMP DIFFERENCE xxC. This is the maximum temperature difference between the internal and external probes. Use this to prevent the unit from running out of control in the event the external probe is accidently removed from the fluid. Press **SET ENTER** and use the keypad to enter the desired value.

Press **NEXT** to display RS232 IS DISABLED PRESS NO TO CHANGE. Press NO to toggle between disabled and enabled or press **YES** or **SET ENTER** to use the displayed mode.

Press **NEXT** to display MAX COOLING DISABLED PRESS NO TO CHANGE. **NOTE:** Applicable to RTE-300s only. RTE-300s are equipped with a min/max cooling solenoid. With large heat loads it may be necessary to enable max cooling. Press NO to toggle between disabled and enabled or press **YES** or **SET ENTER** to use the displayed mode.

Press **NEXT** to display SAVE SETUP? PRESS YES OR NO. Press YES to accept the changes. Press NO to ignore them. The unit will return to the main display.

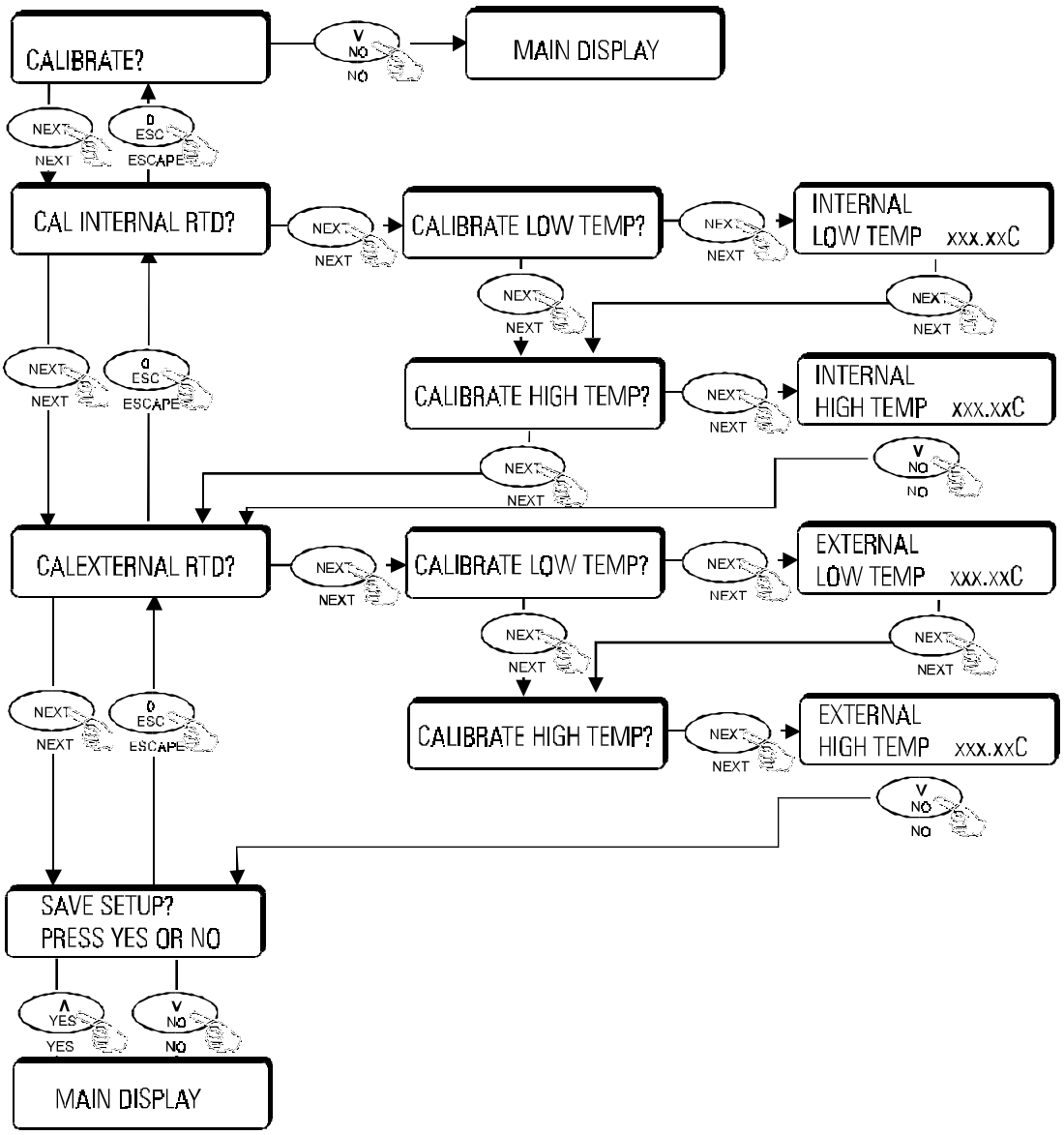

Calibration Loop

NOTE: The calibration loop is not accessible if a program is running or if RS-232 communications is enabled.

Use the calibration loop to calibrate the internal and external RTD temperatures. **NOTE:** Changing the factory set calibration will affect the accuracy of the controller. A time out is not used in this loop.

To enter the calibration loop, from the main display press and hold **NEXT** while pressing **ESC - ENTER - ESC**. The display will indicate CALIBRATE?

Press **NO** to return to the main display. Press **YES** or **NEXT** and the display indicates CALIBRATE INTERNAL RTD? Press **YES** or **NEXT** and the display indicates CALIBRATE LOW TEMP? Press **NEXT** and the display indicates INTERNAL LOW TEMP xxx.xxC. To perform a low tem-

perature calibration press **SET** and use the keypad to change the value. If the values did not need to be changed, press **NO** when the display indicated CALIBRATE LOW TEMP?

Press **NEXT** and the display indicates CALIBRATE HIGH TEMP? Press **NEXT** and the display indicates INTERNAL HIGH TEMP xxx.xxC. To perform a high temperature calibration press **SET** and use the keypad to change the value. If the values did not need to be changed, press **NO** when the display indicated CALIBRATE HIGH TEMP?

Press **NEXT** and the display indicates CALIBRATE EXTERNAL RTD? Press **NEXT** and the display indicates CALIBRATE LOW TEMP? Press **NEXT** and the display indicates EXTERNAL LOW TEMP xxx.xxC. To perform a low temperature calibration press **SET** and use the keypad to change the value. If the values did not need to be changed, press **NO** when the display indicated CALIBRATE LOW TEMP?

Press **NEXT** and the display indicates CALIBRATE HIGH TEMP? Press **NEXT** and the display indicates EXTERNAL HIGH TEMP xxx.xxC. To perform a high temperature calibration press **SET** and use the keypad to change the value. If the values did not need to be changed, press **NO** when the display indicated CALIBRATE HIGH TEMP?

Press **NEXT** and the display will indicate SAVE CALIBRATION? PRESS YES OR NO. Press **YES** to save the changes, press **NO** to ignore them. The unit will return to the main display.

Baud rate:	9600
Parity:	none
Data bits:	8
Stop bits:	1
Flow control:	none

Commands (uppercase only):

?	help
A1	reports “OK” to indicate that RS232 is enabled
S?	report temperature setpoint
Sn	change temperature setpoint to n
F?	report bath temperature
U?	report bath temperature units (C, F or U)
C	change temperature units to °C
F	change temperature units to °F
U	change temperature units to °U (user defined units)
&LH?	report high temperature limit
&LL?	report low temperature limit
&LHn	change high temperature limit to n
&LLn	change low temperature limit to n
&P?	report temperature resolution (number of decimal places)
&Pn	change temperature resolution (1 or 2)
&R?	report refrigeration off temperature
&Rn	change refrigeration off temperature to n
&X?	report controlling temperature probe
&Xn	change controlling temperature probe (0/1 = internal/external)
&D?	report maximum internal/external differential temperature
&Dn	change maximum internal/external differential temperature to n

High Temperature/ Low Liquid Level Safety

To protect your application, the adjustable High Temperature/Low Liquid Level Safety (HIGH TEMP/LOW LEVEL) ensures the heater will not exceed temperatures which can cause serious damage to your unit. A single temperature sensor, located on the heater coils in the circulator, monitors both conditions. A High Temperature/Low Liquid Level fault occurs when the temperature of the sensor exceeds the set temperature limit.

In the event of a fault, the unit will shut down and a FAULT LED will illuminate. The cause of the fault must be identified and corrected before the unit can be restarted.

To set the safety, locate the HIGH TEMP/LOW LEVEL SAFETY adjustment dial in back of the pump box. Turn the dial fully clockwise and turn the I/O switch on the side of the controller off then back on.

Start the unit. Adjust the setpoint for a few degrees higher than the highest desired fluid temperature and allow the circulator to stabilize at the temperature setpoint. Turn the HIGH TEMP/LOW LEVEL SAFETY dial counterclockwise until you hear a click and the unit shuts down. The red FAULT LED on the temperature controller will light to indicate a fault has occurred.

Cool the circulator and then, without moving the adjustment dial, turn the unit off and then back on.

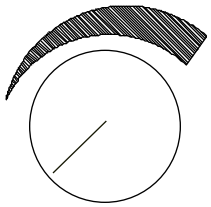

DB9 Connector Pinouts

Programmable units are equipped with DB9 connectors in back of the pump box.

RS232 Connections DB9 Female (J3)

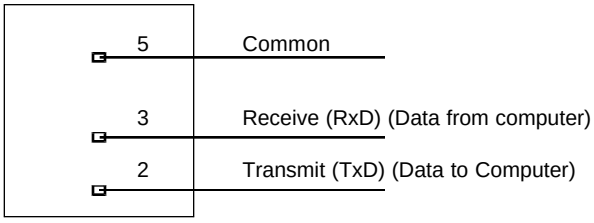

External RTD DB9 Male (P2)

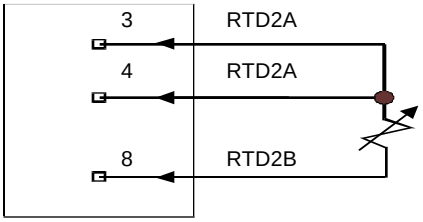

Maintenance & Troubleshooting



To avoid electrical shock, disconnect the mains cord prior to removing any access panels or covers.

Cleaning



Turn the unit off before cleaning.

Routine cleaning can be achieved by simply sponging down the seamless stainless steel tank with a mild soapy solution.



Do not use steel wool; its abrasiveness will lead to rusting.

Dry the circulator using a soft cloth.

For proper operation, the unit needs to pull substantial amounts of air through a condenser. A build up of dust or debris on the fins of the condenser will lead to a loss of cooling capacity.

Periodic vacuuming of the condenser is necessary. The frequency of cleaning depends on the operating environment. After initial installation we recommend the wrapper be removed and a monthly visual inspection of the condenser be made. After several months the frequency of cleaning will be established.

Algae

To restrict the growth of algae in the circulator, we recommend the circulator cover be kept in place and that all circulation lines be opaque. This will eliminate the entrance of light required for the growth of most common algae.

NESLAB recommends the use of Chloramine-T, one gram per gallon.

Checklist

Unit will not start

Make sure the voltage of the power source meets the specified voltage, ±10%. Refer to the serial number label on the rear of the unit to identify the specific electrical requirements of your unit.

Check the High Temperature/Low Liquid Level Safety. If the FAULT light is on, make sure the fluid level in the circulator is between the marks in the baffle and the HIGH TEMP/LOW LEVEL SAFETY setting is greater than the fluid temperature. Turn the unit's I/O switch off than back on to reset the safety.

Loss of cooling capacity
Be sure the cooling capacity of the unit has not been exceeded if circulating to an external system.

When the unit is shut off, wait approximately five minutes before restarting. This allows time for the refrigeration pressures to equalize. If the pressures are not allowed to equalize, the compressor will short-cycle (clicking sound) and no cooling will occur.

Proper ventilation is required for heat removal. Make sure ventilation through the front and rear panels is not impeded and the panels are free of dust and debris.

Ice build up on the cooling coils can act as insulation and lower the cooling capacity. Raise the temperature of the circulator to de-ice the cooling coil and increase the concentration of non-freezing fluid.

No external circulation
Make sure the stainless steel plugs on the PUMP INLET and PUMP OUTLET have been removed.

Check for obstructions, kinks, or leaks in the circulation tubing.

Circulation will cease when the pump head has been exceeded.

WARRANTY

NESLAB Instruments, Inc. warrants for 12 months from date of shipment any NESLAB unit according to the following terms.

Any part of the unit manufactured or supplied by NESLAB and found in the reasonable judgment of NESLAB to be defective in material or workmanship will be repaired at an authorized NESLAB Repair Depot without charge for parts or labor. The unit, including any defective part must be returned to an authorized NESLAB Repair Depot within the warranty period. The expense of returning the unit to the authorized NESLAB Repair Depot for warranty service will be paid for by the buyer. NESLAB's responsibility in respect to warranty claims is limited to performing the required repairs or replacements, and no claim of breach of warranty shall be cause for cancellation or recision of the contract of sales of any unit.

With respect to units that qualify for field service repairs, NESLAB's responsibility is limited to the component parts necessary for the repair and the labor that is required on site to perform the repair. Any travel labor or mileage charges are the financial responsibility of the buyer.

The buyer shall be responsible for any evaluation or warranty service call (including labor charges) if no defects are found with the NESLAB product.

This warranty does not cover any unit that has been subject to misuse, neglect, or accident. This warranty does not apply to any damage to the unit that is the result of improper installation or maintenance, or to any unit that has been operated or maintained in any way contrary to the operating or maintenance instructions specified in NESLAB's Instruction and Operation Manual. This warranty does not cover any unit that has been altered or modified so as to change its intended use.

In addition, this warranty does not extend to repairs made by the use of parts, accessories, or fluids which are either incompatible with the unit or adversely affect its operation, performance, or durability.

NESLAB reserves the right to change or improve the design of any unit without assuming any obligation to modify any unit previously manufactured.

THE FOREGOING EXPRESS WARRANTY IS IN LIEU OF ALL OTHER WARRANTIES, EXPRESSED OR IMPLIED, INCLUDING BUT NOT LIMITED TO WARRANTIES OR MERCHANTABILITY AND FITNESS FOR A PARTICULAR PURPOSE.

NESLAB'S OBLIGATION UNDER THIS WARRANTY IS STRICTLY AND EXCLUSIVELY LIMITED TO THE REPAIR OR REPLACEMENT OF DEFECTIVE COMPONENT PARTS AND NESLAB DOES NOT ASSUME OR AUTHORIZE ANYONE TO ASSUME FOR IT ANY OTHER OBLIGATION.

NESLAB ASSUMES NO RESPONSIBILITY FOR INCIDENTAL, CONSEQUENTIAL, OR OTHER DAMAGES INCLUDING, BUT NOT LIMITED TO LOSS OR DAMAGE TO PROPERTY, LOSS OF PROFITS OR REVENUE, LOSS OF THE UNIT, LOSS OF TIME, OR INCONVENIENCE.

This warranty applies to units sold in the United States. Any units sold elsewhere are warranted by the affiliated marketing company of NESLAB Instruments, Inc. This warranty and all matters arising pursuant to it shall be governed by the law of the State of New Hampshire, United States. All legal actions brought in relation hereto shall be filed in the appropriate state or federal courts in New Hampshire, unless waived by NESLAB.

RTE-200 & RTE-300
Refrigerated Circulators

Thermo NESLAB Manual U00094
Rev. 08-24-99

Instruction and Operation Manual



RTE-200 & RTE-300 Refrigerated Circulator Instruction and Operation Manual

Table of Contents

Preface

Compliance 2
Unpacking 2
Warranty 2
NES-care 2
After-Sale Support 2

Safety

Warnings 3

General Information

Description 4
Specifications 4

Installation

Site 5
Electrical Requirements 5
Plumbing Requirements 6
Fluids 7
Filling Requirements 7

Controllers

Controllers 8
Start Up 8
Digital Controller 8
Microprocessor Controller 13
RS-232 Serial Communications Report 21
High Temperature/Low Liquid Level Safety 22
DB9 Connector Pinouts 23

Maintenance & Troubleshooting

Cleaning 24
Algae 24
Checklist 24

Warranty

Warranty 26

Preface

Compliance

Products tested and found to be in compliance with the requirements defined in the EMC standards defined by 89/336/EEC as well as Low Voltage Directive (LVD) 73/23/EEC can be identified by the CE label on the rear of the unit. The testing has demonstrated compliance with the following directives:

LVD, 73/23/EEC	Complies with UL 3101-1:93
EMC, 89/336/EEC	EN 55011, Class A Verification EN 50082-1:1992 IEC 1000-4-2:1995 IEC 1000-4-3:1994 IEC 1000-4-4:1995

For any additional information refer to the Letter of Compliance that shipped with the unit (Declaration of Conformity).

Unpacking

Retain all cartons and packing material until the unit is operated and found to be in good condition. If the unit shows external or internal damage, or does not operate properly, contact the transportation company and file a damage claim. Under ICC regulations, this is your responsibility.

Warranty

Units have a warranty against defective parts and workmanship for one full year from date of shipment. See back page for more details.

NES-care Extended Warranty Contract

- Extend parts and labor coverage for an additional year.
- Worry-free operation.
- Control service costs.
- Eliminate the need to generate repair orders.
- No unexpected repair costs.

Other contract options are available. Please contact Thermo NESLAB for more information.

After-sale Support

Thermo NESLAB is committed to customer service both during and after the sale. If you have questions concerning the operation of your unit or the information in this manual, contact our Sales Department. If your unit fails to operate properly or if you have questions concerning spare parts or Service Contracts, contact our Service Department.

Before calling, *please* refer to the serial number label on the rear of the case top to obtain the following information:

- BOM number _____

- Serial number _____

Safety

Warnings

Make sure you read and understand all instructions and safety precautions listed in this manual before installing or operating your unit. If you have any questions concerning the operation of your unit or the information in this manual, contact our Sales Department.

Performance of installation, operation, or maintenance procedures other than those described in this manual may result in a hazardous situation and may void the manufacturer's warranty.

Transport the unit with care. Sudden jolts or drops can damage the refrigeration lines.

Observe all warning labels.

Never remove warning labels.

Never operate damaged or leaking equipment.

Never operate the unit without fluid in the circulator.

Use tap water unless operating above 80°C. Above 80°C use Dow 200 silicon oil.

For 220-240 volt units supplied without a line cord, use a harmonized (HAR) grounded 3-conductor cord, type H05VV-F. A suitable cord end is needed for connecting to the equipment (see unit socket) and must terminate with an IEC approved plug for proper power supply connection.

Always turn off the unit and disconnect the line cord from the power source before performing any service or maintenance procedures, or before moving the unit.

Always empty the circulator before moving the unit.

Never operate equipment with damaged line cords.

Refer service and repairs to a qualified technician.

In addition to the safety warnings listed above, warnings are posted throughout the manual. These warnings are designated by an exclamation mark inside an equilateral triangle with text highlighted in bold print. Read and follow these important instructions. Failure to observe these instructions can result in permanent damage to the unit, significant property damage, personal injury or death.

General Information

Description

The RTE Refrigerated Circulators are designed to provide temperature control for applications requiring a fluid work area or pumping to an external system.

The units consist of a circulation pump, stainless steel reservoir, a work area cover, and a temperature controller.

Specifications

	RTE-200	RTE-300
Temperature Range °C[1]		
Digital	-20 to +200	-30 to +200
Programmable	-20 to +200	-30 to +200
Temperature Stability[2]	±0.01	
Pumping Capacity	12 lpm at 0' (0 M) 0 lpm at 7' (2 M)	
Cooling Capacity[1]		
@+20°C	175 watts	545 watts[4]
@ 0°C	100 watts	400 watts
@ -10°C	75 watts	N/A
@ -20°C	N/A	165 watts
Heater Watts	1000 @ 230V	
Circulator Work Area		
(L x W x D)		
Inches	5¼ x 8 x 5½	5¼ x 9 x 8
Centimeters	13.3 x 20.3 x 14.0	13.3 x 22.9 x 20.3
Reservoir Volume		
Gallons	1½	3 7/16
Liters	6	13
Case Dimensions		
(L x W x D)		
Inches	15¾ x 9¼ x 21¼	17 5/8 x 15 x 26
Centimeters	40.0 x 23.3 x 54	44.8 x 38.1 x 66.0
Unit Weight		
Pounds	73	120
Kilograms	33	54

1. Low-end temperatures and cooling capacities achieved using a fluid with a specific gravity of 0.5.
2. Stability is measured at fluid temperature of 20°C, ambient of 20°C, with tap water as the fluid and not in maximum cooling mode.
3. Pumping capacity for units operating at fluid temperature of 20°C, ambient of 21°C, with tap water as the fluid.
4. 20°C heat load data taken in maximum cooling mode.

Installation

Site



Never place the unit in a location where excessive heat, moisture, or corrosive materials are present.

Locate the unit on a sturdy table or bench top. Ambient temperatures should be inside the range of +50°F to +89.6°F (+10°C to +32°C).

The unit has an air-cooled refrigeration system. Air is drawn through the front panel and discharged through the rear panel. The unit must be positioned so the air intake and discharge are not impeded. A minimum clearance of 12 inches (30 centimeters) at the front and rear of the unit is necessary for adequate ventilation. Inadequate ventilation will reduce cooling capacity and, in extreme cases, can cause compressor failure.

Excessively dusty areas should be avoided and a periodic cleaning schedule should be instituted (see Cleaning).

Electrical Requirements



Line voltage may be easily accessible inside the pump/control box. Always unplug the unit prior to removing the pump/control box cover.



The unit construction provides extra protection against the risk of electric shock by grounding appropriate metal parts. The extra protection may not function unless the power cord is connected to a properly grounded outlet. It is the user's responsibility to assure a proper ground connection is provided.



For 220 - 240 volt units supplied without a line cord, use a harmonized (HAR) grounded 3-conductor cord, type H 0 5 V V - F . A suitable cord end is required for connecting to the equipment (see unit socket) and must terminate with an IEC approved plug for proper connection to power supply.

Refer to the serial number label on the rear of the unit to identify the specific electrical requirements of your unit.

Ensure the voltage of the power source meets the specified voltage, ±10%.

Plumbing Requirements



Ensure the unit is off before connecting tubing to the unit.

To prevent damage to the plumbing lines, always support the ¾" fittings while installing/removing the pumping caps and lines.

Hose Connections

The pump connections are located at the rear of the pump box and are labelled INLET and OUTLET. The connections are capped with stainless steel serrated plugs.

The pump lines have ¼ inch male pipe threads for mating with standard plumbing fittings. For your convenience two stainless steel adapters, ¼ inch female pipe thread to ⅜ inch O.D. serrated fitting, are provided. (To assure proper fit, they should be installed using Teflon® tape around the threads.)

Flexible tubing, if used, should be of heavy wall or reinforced construction. Make sure all tubing connections are securely clamped. Avoid running tubing near radiators, hot water pipes, etc. If substantial lengths of tubing are necessary, insulation may be required to prevent loss of cooling capacity.

It is important to keep the distance between the unit and the external system as short as possible, and to use the largest diameter tubing practical. Tubing should be straight and without bends. If diameter reductions must be made, make them at the inlet and outlet of the external system, not at the unit.

If substantial lengths of cooling lines are required, they should be pre-filled with bath fluid before connecting them to the unit. This will ensure that a adequate amount of fluid will be in the circulator once it is in operation.

Pumping

The pump is designed to deliver a flow of 12 liters/minute at 0 feet head. To prevent external circulation, the INLET and OUTLET lines are capped. The caps must be removed when external circulation is required.

To properly secure the external hose connections to the unit, wrap Teflon® tape around the pipe line threads before installation. Once the hose connections are made, the pump must be properly plumbed to an external system. *It is important the circulator is not in operation until all plumbing is complete.*

If the circulator is not used for external circulation, make sure the stainless steel caps are in place prior to operating the circulator.

Fluids



Never use flammable or corrosive fluids with this unit.

Filtered tap water is the recommended fluid for operation from 7°C to +80°C.

Above +80°C, Dow 200® silicon oil is recommended.

For operation below 7°C, a 50/50 mixture, by volume, of tap water and laboratory grade ethylene glycol is suggested.



Never use pure ethylene glycol as a fluid. A minimum 80/20 mixture of Ethylene Glycol and filtered tap water is allowed.

Filling Requirements

The circulator work area has a high and low level marker to guide filling. The markers are 1 inch horizontal slits located in the center of the stainless steel baffle separating the work area and the pump assembly. The correct fluid level falls between these two markers. The heating and cooling coils will be exposed and may become damaged if the correct fluid level is not provided.

When pumping to an external system, keep extra fluid on hand to maintain the proper level in both the circulating lines and external system.



Never run the unit when the work area is empty. Avoid overfilling. Overfilling the bath may damage the insulation and affects stability as well as low-end performance.

Controllers

Controllers

Two temperature controllers are available with the unit: Digital and Microprocessor. This section explains the installation and operation of each.

Start Up

Before starting the unit, check all electrical and plumbing connections and make sure the work area has been properly filled with fluid.

To start any unit place the I/O switch on the side of the controller to the **I** (power on) position. The pump will start and the controller display will light.

NOTE: When the unit is shut off, wait approximately five minutes before restarting. This allows time for the refrigeration pressures to equalize. If the pressures are not allowed to equalize, the compressor will short-cycle (clicking sound) and no cooling will occur.

Digital Controller

The digital controller consists of a seven-segment LCD Main Display with contrast control, heating/cooling status indicators, a four-button keypad and user adjustable 0.1° or 0.01° display resolution. It also features on/off refrigeration control, automatic min/max refrigeration control, audio/visual alarm messages, user selected high/low temperature limits and a user-adjustable Proportional, Integral and Derivative (PID) control.

NOTE: The refrigeration turns off when operating above 35°C.



Main Display

The LCD Main Display normally indicates the fluid temperature as well as the current setpoint temperature.

Key Button Definition

SET is used to change the current value or status of a function within the software.

ENTER is used to "accept" the new value or function.

YES is used to confirm a question asked within the software and increment displayed values.

NO is used to reject or change a function with in the software and decrement displayed values.

NEXT is used as a means to quickly scroll through the software loops and settings.

Changing Setpoint

To change the setpoint, press **SET**. The current setpoint will flash. Use the keys to change the setpoint. Scrolling includes three speed acceleration. Press **ENTER** to accept the new setpoint. **NOTE:** If you do not press **ENTER**, a time out will occur 30 seconds after the last key is pressed and the old setpoint will be used.

Setup Loop

The setup loop is used to enable cooling, change the display resolution, change the temperature scale, change temperature limits and adjust the PID control. See illustration on next page.

To enter the setup loop, press and hold **NEXT** for three seconds. The display will indicate SETUP LOOP? **NOTE:** Pressing **NO** will display the software version number and then return to the Main Display. A time out will occur 60 seconds after the last key is pressed and the display will revert to the Main Display.

Press **NEXT** or **YES** to display COOLING ENABLED PRESS NO TO CHANGE. Press **NO** to toggle between cooling enable and disable.

Press **NEXT** to display RESOLUTION = 0.01 PRESS NO TO CHANGE. Press **NO** to toggle the resolution between 0.1° and 0.01° resolution.

Press **NEXT** to display UNITS ARE C PRESS NO TO CHANGE. Press **NO** to toggle the scale between Fahrenheit (F), Celsius (C) or a user (U) scale.

NOTE: The following is displayed only if a user (U) scale was selected. Press **NEXT** to display U = K1(C + K2) + K3 Kn=xxx.x. Press **SET** and then use the arrow keys to change the K values.

Press **NEXT** to display HIGH T LIMIT xxx.xxC LOW T LIMIT xxx.xxC. Press **SET** to be able to use the arrow keys to change the high temperature limit. Press **ENTER** to accept the new value. Press **SET** again

to be able to change the low temperature limit. Press **ENTER** to accept the new value. **NOTE:** To bypass changing the high temperature value press **SET SET** when HIGH T LIMIT xxx.xxC LOW T LIMIT xxx.xxC is initially display.

NEXT to display ENTER PID CONSTANTS? Press **NO** to bypass changing the constants and display **SAVE SETUP?** Press **YES** or **NEXT** to display **PROPORTIONAL TERM P = xx.x% OF SPAN**. Press **SET** and then use the arrow keys to change the value.

Press **NEXT** to display INTEGRAL TERM I = x.xx REPEATS/MIN. Press **SET** and then use the arrow keys to change the value.

Press **NEXT** to display DERIVATIVE TERM D = x.xx MINUTES. Press **SET** and then use the arrow keys to change the value.

Press **NEXT** to display MAX COOLING DISABLED PRESS NO TO CHANGE. **NOTE:** Applicable to RTE-300 only. RTE-300s are equipped with a min/max cooling solenoid. With large heat loads it may be necessary to enable max cooling. Press **NO** to toggle between modes.

Press **NEXT** to display SAVE SETUP? PRESS YES OR NO. Press **YES** to accept the changes. Press **NO** to ignore them. With either choice the unit will return to the main display.

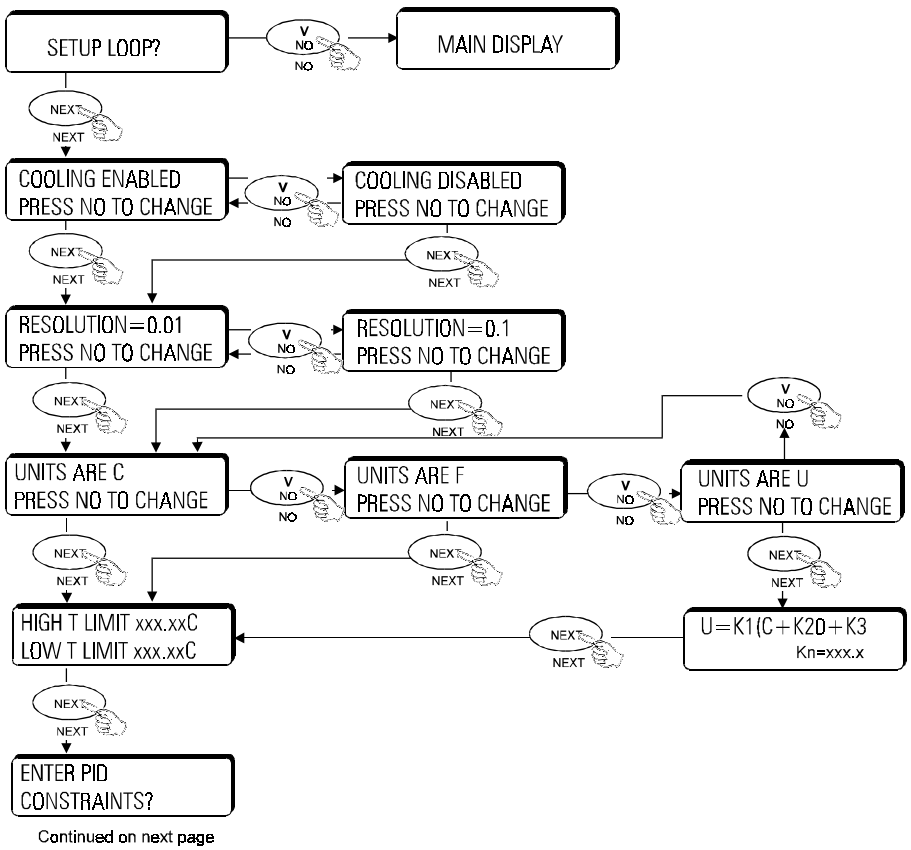

Continued from previous page

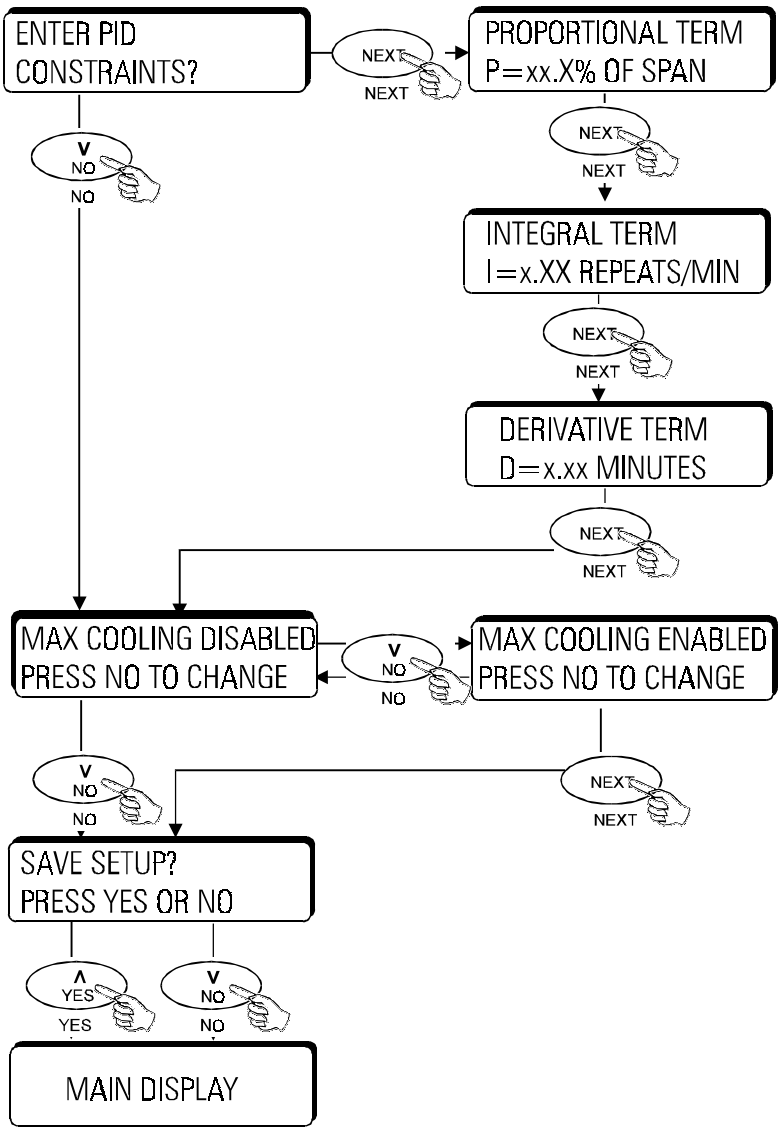

Factory Preset Values

P = 1.2

I = 0.20

D = 0.05

Calibration Loop

Use the calibration loop to calibrate the RTD temperature probe. The wider the temperature spread used, the more accurate the calibration. **NOTE:** Changing the factory set calibration will affect the accuracy of the controller. A time out is not used in this loop.

Run the temperature to a suitable low-end value. Once stabilized enter the calibration loop. From the main display press and hold **NEXT** while pressing, within three seconds, **ENTER - NO - ENTER**. The display will indicate CALIBRATE RTD?

Press **NEXT** and the display indicates CALIBRATE LOW TEMP? To perform a low temperature calibration press **YES** or **NEXT** and the display will indicate CAL RTD LOW TEMP xxx.xxC. Press **SET** and then use

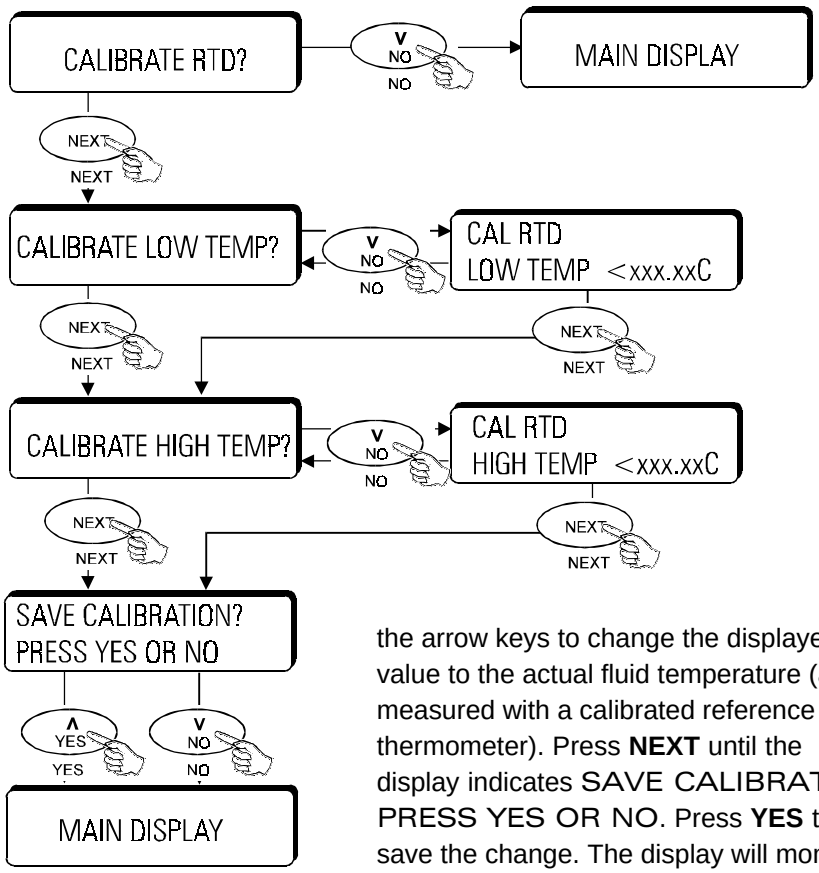

the arrow keys to change the displayed value to the actual fluid temperature (as measured with a calibrated reference thermometer). Press **NEXT** until the display indicates SAVE CALIBRATION PRESS YES OR NO. Press **YES** to save the change. The display will momentarily display BOTH LOW AND HIGH CAL MUST BE DONE then return to the main display.

Run the temperature to a suitable high-end value. Once stabilized reenter the calibration loop. Press **YES** or **NEXT** until the display indicates CALIBRATE HIGH TEMP? Press **NEXT** and the display will indicate CAL RTD HIGH TEMP xxx.xxC. Press **SET** and then use the arrow keys to change the displayed value to the actual fluid temperature (as measured with a calibrated reference thermometer). Press **NEXT** until the display indicates SAVE CALIBRATION PRESS YES OR NO. Press **YES** to save the change. The display will return to the main display.

Microprocessor Controller

The microprocessor controller consists of a seven-segment LCD with contrast control, heating/cooling status indicators, a 12-button keypad and user adjustable 0.1° or 0.01° temperature display resolution, external sensor input with automatic switching in the event of external sensor failure. It also features automatic on/off refrigeration control, automatic min/max refrigeration control, audio/visual alarm messages, automatic fixed temperature limit, user selected high/low temperature limits, programmable temperature profile, RS-232 communication and a user-adjustable Proportional, Integral and Derivative (PID) control.

Main Display

The LCD normally indicates the fluid temperature as well as the current setpoint temperature, or the external temperature and setpoint.



Key Button Definition

SET is used to change the current value or status of a function within the software.

ENTER is used to "accept" the new value or function.

YES is used to confirm a question asked within the software or increment a displayed value.

NO is used to reject or change a function within the software or decrement a displayed value.

NEXT is used as a means to quickly scroll through the software loops and settings.
± is used to change the current numeric value from positive to negative, or negative to positive.

SETUP is used to enter the controller's setup loop.

PROG is used to enter the controller's program loop.

ESC is used to backtrack to the previous screen within a software loop.

1 - 9 keys are used to enter a number.

Changing Setpoint

To change the setpoint, press **SET ENTER**. The current setpoint will flash. If the number to be entered is negative, press the **+/-** key. Otherwise, enter the most significant digit of the number. The digit will appear in the least significant decimal position. As each digit is entered the previously entered digits will shift up in significance. Enter trailing zeros as needed to obtain the desired order of magnitude. Press **SET ENTER** to accept the new setpoint. **NOTE:** If you do not press **SET ENTER**, a time out will occur 30 seconds after the last key is pressed and the old setpoint will be used.

Program Loop

NOTE: The program loop is not accessible if the RS-232 communications is enabled (see Setup Loop on page 16). The program loop is used to program the controller. The controller can store up to two programs, each with as many as ten steps. (Refer to the Setup Loop on the page 16 for other options.)

To enter the program loop, press and hold **PROG** for three seconds. The display will indicate RUN PROGRAM A? **NOTE:** A time out will occur 60 seconds after the last key is pressed and the program will revert to old values and the display will revert to the fluid temperature.

The unit's are not shipped with stored programs. Before a program can be run, it has to be edited and stored. Therefore, for initial programming or program editing press **NEXT** to display RUN PROGRAM B? and then press **NEXT** again to display EDIT PROGRAM A?

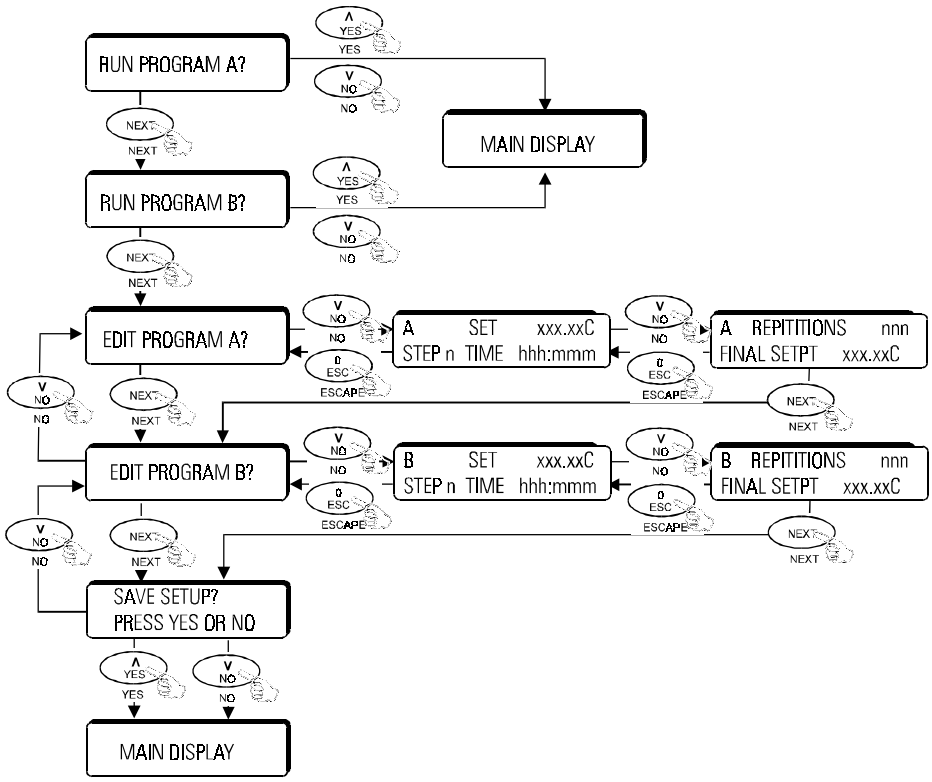

Press **YES** or **NEXT** to display the temperature, step number and time duration. Steps start at 0. Press **SET ENTER** and using the keypad enter the setpoint temperature. Press **SET ENTER**. Press **SET ENTER** and enter the number of hours. Press **SET ENTER**. Press **SET ENTER** and enter the number of minutes. Press **SET ENTER**.

NOTE: Step time starts when the fluid temperature gets within 0.5°C of the current setpoint.

The display will increment to step 1. Repeat the procedure for the total number of desired steps. To skip a number press **SET ENTER** twice. To end a program with fewer than ten steps, enter 0 hours and 0 minutes.

Press **NEXT** to display the number of program repetitions. Press **SET ENTER** and enter the number of reps. Press **SET ENTER**. Press **SET ENTER** and enter the final setpoint for the program. Press **SET ENTER**.

Press **NEXT** to display EDIT PROGRAM B? Use the same procedures.

Press **NEXT** to display SAVE PROGRAMS? Press **YES** to save or **NO** to ignore. The unit returns to the main display.

With program(s) saved, when the display reads RUN PROGRAM pressing **YES** will start the program, pressing **NO** will stop it. With either choice the unit returns to the main display.

Setup Loop

NOTE: The setup loop is not accessible if a program is running. If RS-232 communications is enabled, only the RS-232 portion of the setup loop is active.

The setup loop is used to enable refrigeration, change the display resolution, change the temperature scale, change temperature limits, adjust the PID control, select internal or external probe, enter the maximum internal and external temperature difference and enable RS-232 communications.

To enter the setup loop from the main display, press and hold **SETUP** for three seconds. The display will indicate **SETUP LOOP? NOTE:** A time out will occur 60 seconds after the last key is pressed and the display will revert to the fluid temperature.

Press **YES** or **NEXT** to display **REFRIGERATION OFF WHEN SETPOINT > xxC**. Use the keypad to display the desired temperature.



The refrigeration system is not designed to operate above

Press **NEXT** to display **RESOLUTION = 0.01 PRESS NO TO CHANGE**. Press **NO** to toggle between 0.1°C and 0.01°C display resolution, press **YES** or **NEXT** to maintain the displayed resolution.

Press **NEXT** to display **UNITS ARE C PRESS NO TO CHANGE**. Press **NO** to toggle between temperature scales Celsius (C), Fahrenheit (F) and a user defined (U) scale. Press **YES** or **NEXT** to maintain the displayed scale.

NOTE: The following is displayed only if a user (U) scale was selected. Press **NEXT** to display **U = K1(C + K2) + K3 Kn=xxx.x**. Press **SET ENTER** and use the keypad to change the values.

Press **NEXT** to display **HIGH T LIMIT xxx.xxC LOW T LIMIT xxx.xxC**. Press **SET ENTER** and enter the high temperature limit. Press **SET ENTER** to accept the new value. Press **SET ENTER** again to be able to change the low temperature limit. Press **SET ENTER** to accept the new value. **NOTE:** To bypass changing the high temperature value press **SET ENTER** twice when **HIGH T LIMIT xxx.xxC LOW T LIMIT xxx.xxC** is initially display.

Press **NEXT** to display **ENTER PID CONSTANTS?** Press **NO** to bypass changing the constants and display **PROBE IS INTERNAL PRESS NO TO CHANGE** or press **NEXT** to display **PROPORTIONAL TERM P = xx.x% OF SPAN**. Press **SET ENTER** and use the keypad to enter the desired value.

Press **NEXT** to display **INTEGRAL TERM I = x.xx REPEATS/MIN**. Press **SET ENTER** and use the keypad to enter the desired value.

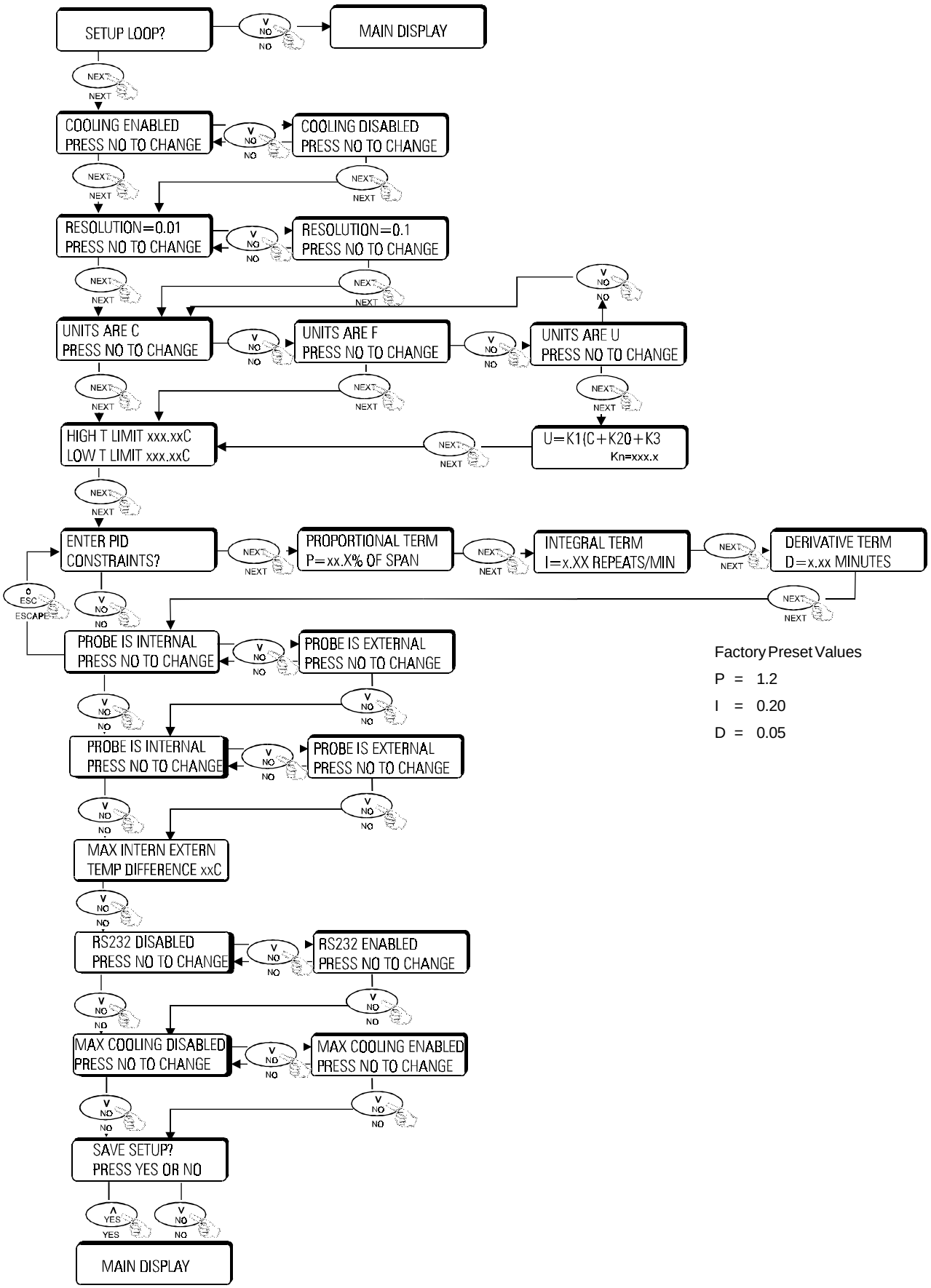

Factory Preset Values

P = 1.2

I = 0.20

D = 0.05

Press **NEXT** to display DERIVATIVE TERM D = x.xx MINUTES. Press **SET ENTER** and use the keypad to enter the desired value.

Press **NEXT** to display **PROBE IS INTERNAL PRESS NO TO CHANGE**. Press **NO** to toggle between internal or external probe or press **YES** or **SET ENTER** to use the displayed probe.

Press **NEXT** to display MAX INTERN EXTERN TEMP DIFFERENCE xxC. This is the maximum temperature difference between the internal and external probes. Use this to prevent the unit from running out of control in the event the external probe is accidently removed from the fluid. Press **SET ENTER** and use the keypad to enter the desired value.

Press **NEXT** to display RS232 IS DISABLED PRESS NO TO CHANGE. Press **NO** to toggle between disabled and enabled or press **YES** or **SET ENTER** to use the displayed mode.

Press **NEXT** to display MAX COOLING DISABLED PRESS NO TO CHANGE. **NOTE:** Applicable to RTE-300s only. RTE-300s are equipped with a min/max cooling solenoid. With large heat loads it may be necessary to enable max cooling. Press **NO** to toggle between disabled and enabled or press **YES** or **SET ENTER** to use the displayed mode.

Press **NEXT** to display SAVE SETUP? PRESS YES OR NO. Press YES to accept the changes. Press **NO** to ignore them. The unit will return to the main display.

Calibration Loop

NOTE: The calibration loop is not accessible if a program is running or if RS-232 communications is enabled.

Use the calibration loop to calibrate the internal and external RTD temperatures. **NOTE:** Changing the factory set calibration will affect the accuracy of the controller. A time out is not used in this loop.

Run the temperature to a suitable low-end value. Once stabilized enter the calibration loop. From the main display press and hold **NEXT** while pressing **ESC - ENTER - ESC**. The display will indicate CALIBRATE?

Press **YES** or **NEXT** and the display indicates CALIBRATE INTERNAL RTD? Press **YES** or **NEXT** and the display indicates CALIBRATE LOW TEMP? Press **NEXT** and the display indicates INTERNAL LOW

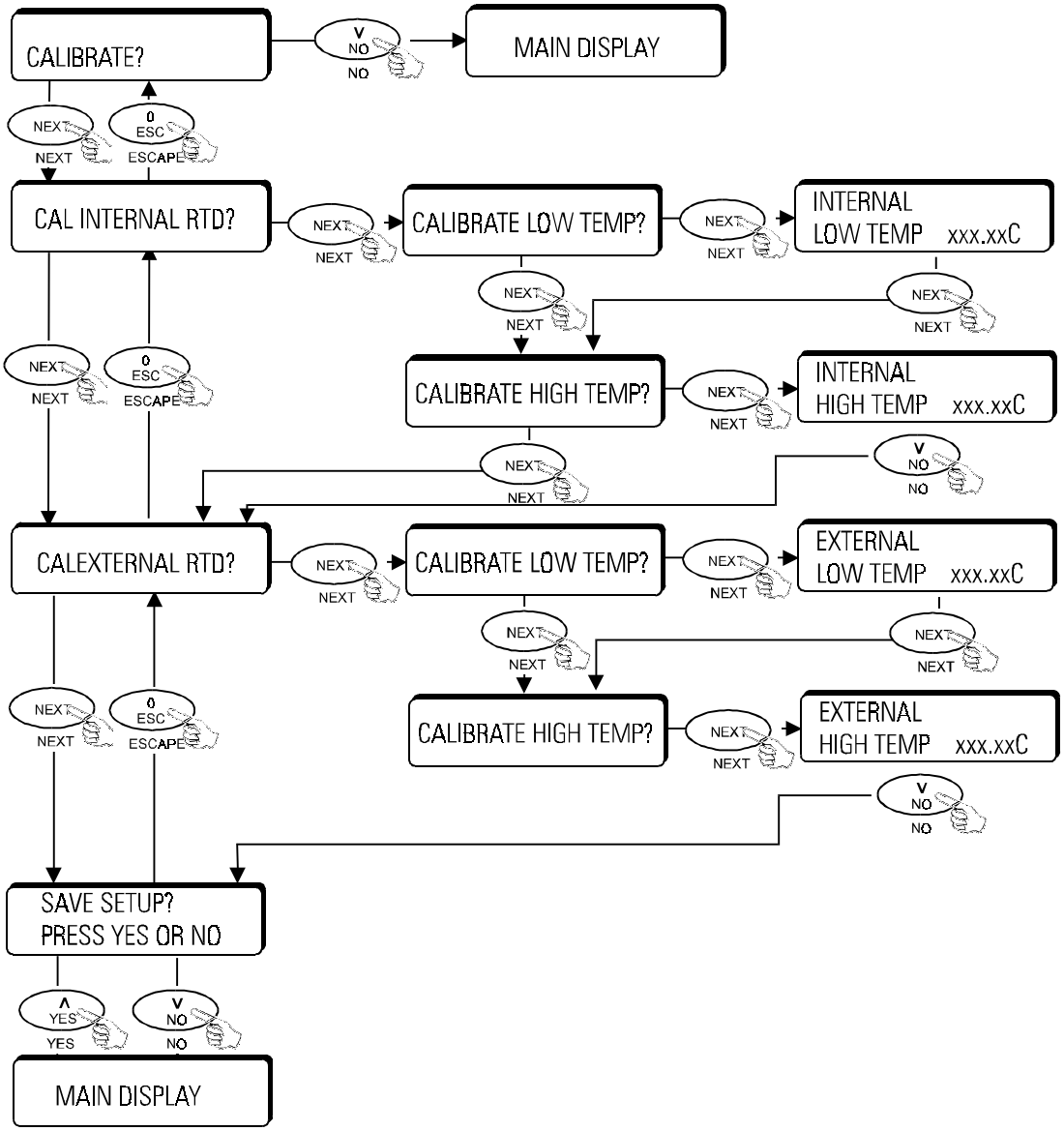

TEMP xxx.xxC. To perform a low temperature calibration press **SET** and use the keypad to change the value (as measured with a calibrated reference thermometer). Press **NEXT** until the display indicates CAL EXTERNAL RTD? Use the same procedure to calibrate the external RTD (if desired). Press **NEXT** and the display will indicate SAVE CALIBRATION? PRESS YES OR NO. Press **YES** to save the changes. The display will momentarily display BOTH LOW AND HIGH CAL MUST BE DONE then return to the main display.

Run the temperature to a suitable high-end value. Once stabilized reenter the calibration loop. Use the same procedure to perform the high-end calibration. Press **NEXT** until the display indicates SAVE CALIBRATION PRESS YES OR NO. Press **YES** to save the changes. The display will return to the main display.

Baud rate:	9600
Parity:	none
Data bits:	8
Stop bits:	1
Flow control:	none

Commands (uppercase only):	**Response**
?[CR] help	Protocol Examples
A1[CR] reports “OK” to indicate that RS232 is enabled	[CR]OK[CR][CR]
S?[CR] report temperature setpoint	n[CR]OK[CR][CR]
Sn[CR] change temperature setpoint to n	[CR]OK[CR][CR]
F?[CR] report bath temperature	n[CR]OK[CR][CR]
U?[CR] report bath temperature units (x = C, F or U)	x[CR]OK[CR][CR]
C[CR] change temperature units to °C	[CR]OK[CR][CR]
F[CR] change temperature units to °F	[CR]OK[CR][CR]
U[CR] change temperature units to °U (user defined units)	[CR]OK[CR][CR]
&LH?[CR] report high temperature limit	n[CR]OK[CR][CR]
&LL?[CR] report low temperature limit	n[CR]OK[CR][CR]
&LHn[CR] change high temperature limit to n	[CR]OK[CR][CR]
&LLn[CR] change low temperature limit to n	[CR]OK[CR][CR]
&P?[CR] report temperature resolution (number of decimal places)	n[CR]OK[CR][CR]
&Pn[CR] change temperature resolution (n = 1 or 2)	[CR]OK[CR][CR]
&R?[CR] report refrigeration off temperature	[CR]OK[CR][CR]
&Rn[CR] change refrigeration off temperature to n	n[CR]OK[CR][CR]
&X?[CR] report controlling temperature probe	[CR]OK[CR][CR]
&Xn[CR] change controlling temperature probe (0/1 = internal/external)	0 Internal[CR]OK[CR][CR] or 1External[CR]OK[CR][CR]
&D?[CR] report maximum internal/external differential temperature	n[CR]OK[CR][CR]
&Dn[CR] change maximum internal/external differential temperature to n	n[CR]OK[CR][CR]

n = Numeric data

Error Messages

INPUT OR RANGE ERROR[CR][CR] Controller received a setpoint that was out of range.
REQUEST DENIED[CR][CR] Setpoint can be changed only while:

- Displaying temperature
- A value is not currently being entered
- Not in program mode.

High Temperature/ Low Liquid Level Safety

To protect your application, the adjustable High Temperature/Low Liquid Level Safety (HIGH TEMP/LOW LEVEL) ensures the heater will not exceed temperatures which can cause serious damage to your unit. A single temperature sensor, located on the heater coils in the circulator, monitors both conditions. A High Temperature/Low Liquid Level fault occurs when the temperature of the sensor exceeds the set temperature limit.

In the event of a fault, the unit will shut down and a FAULT LED will illuminate. The cause of the fault must be identified and corrected before the unit can be restarted.

To set the safety, locate the HIGH TEMP/LOW LEVEL SAFETY adjustment dial in back of the pump box. Turn the dial fully clockwise and turn the I/O switch on the side of the controller off then back on.

Start the unit. Adjust the setpoint for a few degrees higher than the highest desired fluid temperature and allow the circulator to stabilize at the temperature setpoint. Turn the HIGH TEMP/LOW LEVEL SAFETY dial counterclockwise until you hear a click and the unit shuts down. The red FAULT LED on the temperature controller will light to indicate a fault has occurred.

Cool the circulator and then, without moving the adjustment dial, turn the unit off and then back on.

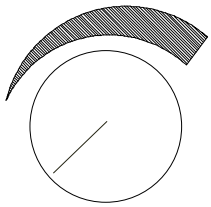

DB9 Connector Pinouts

Programmable units are equipped with DB9 connectors in back of the pump box.

RS232 Connections DB9 Female (J3)

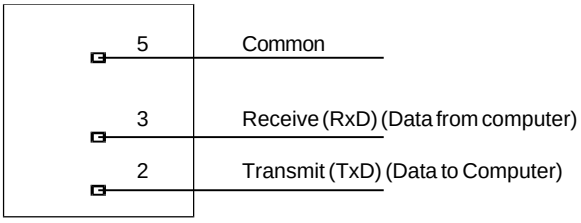

External RTD DB9 Male (P2)

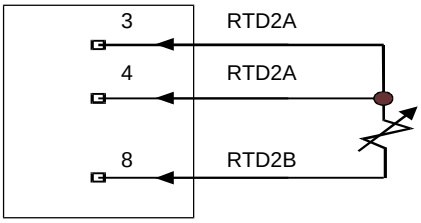

Maintenance & Troubleshooting



To avoid electrical shock, disconnect the mains cord prior to removing any access panels or covers.

Cleaning



Turn the unit off before cleaning.

Routine cleaning can be achieved by simply sponging down the seamless stainless steel tank with a mild soapy solution.



Do not use steel wool; its abrasiveness will lead to rusting.

Dry the circulator using a soft cloth.

For proper operation, the unit needs to pull substantial amounts of air through a condenser. A build up of dust or debris on the fins of the condenser will lead to a loss of cooling capacity.

Periodic vacuuming of the condenser is necessary. The frequency of cleaning depends on the operating environment. After initial installation we recommend the wrapper be removed and a monthly visual inspection of the condenser be made. After several months the frequency of cleaning will be established.

Algae

To restrict the growth of algae in the circulator, we recommend the circulator cover be kept in place and that all circulation lines be opaque. This will eliminate the entrance of light required for the growth of most common algae.

Thermo NESLAB recommends the use of Chloramine-T, 1 gram per 3.5 liters.

Checklist

Unit will not start

Make sure the voltage of the power source meets the specified voltage, ±10%. Refer to the serial number label on the rear of the unit to identify the specific electrical requirements of your unit.

Check the High Temperature/Low Liquid Level Safety. If the FAULT light is on, make sure the fluid level in the circulator is between the marks in the baffle and the HIGH TEMP/LOW LEVEL SAFETY setting is greater than the fluid temperature. Turn the unit's I/O switch off than back on to reset the safety.

Loss of cooling capacity

Be sure the cooling capacity of the unit has not been exceeded if circulating to an external system.

When the unit is shut off, wait approximately five minutes before restarting. This allows time for the refrigeration pressures to equalize. If the pressures are not allowed to equalize, the compressor will short-cycle (clicking sound) and no cooling will occur.

Proper ventilation is required for heat removal. Make sure ventilation through the front and rear panels is not impeded and the panels are free of dust and debris.

Ice build up on the cooling coils can act as insulation and lower the cooling capacity. Raise the temperature of the circulator to de-ice the cooling coil and increase the concentration of non-freezing fluid.

Check controler PID values.

No external circulation

Make sure the stainless steel plugs on the PUMP INLET and PUMP OUTLET have been removed.

Check for obstructions, kinks, or leaks in the circulation tubing.

Circulation will cease when the pump head has been exceeded.

WARRANTY

Thermo NESLAB Instruments, Inc. warrants for 12 months from date of shipment any Thermo NESLAB unit according to the following terms.

Any part of the unit manufactured or supplied by Thermo NESLAB and found in the reasonable judgment of Thermo NESLAB to be defective in material or workmanship will be repaired at an authorized Thermo NESLAB Repair Depot without charge for parts or labor. The unit, including any defective part must be returned to an authorized Thermo NESLAB Repair Depot within the warranty period. The expense of returning the unit to the authorized Thermo NESLAB Repair Depot for warranty service will be paid for by the buyer. Thermo NESLAB's responsibility in respect to warranty claims is limited to performing the required repairs or replacements, and no claim of breach of warranty shall be cause for cancellation or recision of the contract of sales of any unit.With respect to units that qualify for field service repairs, Thermo NESLAB's responsibility is limited to the component parts necessary for the repair and the labor that is required on site to perform the repair. Any travel labor or mileage charges are the financial responsibility of the buyer.

The buyer shall be responsible for any evaluation or warranty service call (including labor charges) if no defects are found with the Thermo NESLAB product.

This warranty does not cover any unit that has been subject to misuse, neglect, or accident. This warranty does not apply to any damage to the unit that is the result of improper installation or maintenance, or to any unit that has been operated or maintained in any way contrary to the operating or maintenance instructions specified in Thermo NESLAB's Instruction and Operation Manual. This warranty does not cover any unit that has been altered or modified so as to change its intended use.

In addition, this warranty does not extend to repairs made by the use of parts, accessories, or fluids which are either incompatible with the unit or adversely affect its operation, performance, or durability.

Thermo NESLAB reserves the right to change or improve the design of any unit without assuming any obligation to modify any unit previously manufactured.

THE FOREGOING EXPRESS WARRANTY IS IN LIEU OF ALL OTHER WARRANTIES, EXPRESSED OR IMPLIED, INCLUDING BUT NOT LIMITED TO WARRANTIES OR MERCHANTABILITY AND FITNESS FOR A PARTICULAR PURPOSE.

Thermo NESLAB'S OBLIGATION UNDER THIS WARRANTY IS STRICTLY AND EXCLUSIVELY LIMITED TO THE REPAIR OR REPLACEMENT OF DEFECTIVE COMPONENT PARTS AND Thermo NESLAB DOES NOT ASSUME OR AUTHORIZE ANYONE TO ASSUME FOR IT ANY OTHER OBLIGATION.

Thermo NESLAB ASSUMES NO RESPONSIBILITY FOR INCIDENTAL, CONSEQUENTIAL, OR OTHER DAMAGES INCLUDING, BUT NOT LIMITED TO LOSS OR DAMAGE TO PROPERTY, LOSS OF PROFITS OR REVENUE, LOSS OF THE UNIT, LOSS OF TIME, OR INCONVENIENCE.

This warranty applies to units sold in the United States. Any units sold elsewhere are warranted by the affiliated marketing company of Thermo NESLAB Instruments, Inc. This warranty and all matters arising pursuant to it shall be governed by the law of the State of New Hampshire, United States. All legal actions brought in relation hereto shall be filed in the appropriate state or federal courts in New Hampshire, unless waived by Thermo NESLAB.

RTE-4 & RTE-8 Refrigerated Bath Circulators

NESLAB Manual P/N 013521

Installation, Operation and Service Manual

RTE-4 & RTE-8 Bath and Circulator

Instruction and Operation Manual

Table of Contents

PREFACE

Unpacking 2
Warranty 2
After-sale Support 2

SECTION I
Safety

Warnings 3

SECTION II
General Information

Description 4
Specifications 4

SECTION III
Installation & Operation

Site 5
Electrical Requirements 5
Plumbing Requirements 5
Fluids 6
Filling Requirements 7
Temperature Adjustment 7
High Temperature Safety 8
PST Preset Temperature Option 8

SECTION IV
Maintenance/
Troubleshooting

Cleaning 9
Algae 9
Checklist 9
Service Assistance 10

SECTION VI
Warranty

Warranty 11

Preface

Unpacking

Retain all cartons and packing material until the unit is operated and found to be in good condition.

If the unit shows external or internal damage, or does not operate properly, contact the transportation company and file a damage claim. Under ICC regulations, this is your responsibility.

Warranty

Units have a warranty against defective parts and workmanship for one full year from date of shipment. See back page for more details.

After-sale Support

NESLAB is committed to customer service both during and after the sale. If you have questions concerning the operation of your unit contact our Sales Department, see back cover. If your unit fails to operate properly, or if you have questions concerning spare parts or Service Contracts, contact our Customer Service Department. Before calling, please obtain the following information from the unit's serial number label:

- *BOM number* _____
- *Serial number* _____

Section I Safety

Warnings

Make sure you read and understand all instructions and safety precautions listed in this manual before installing or operating your unit. If you have any questions concerning the operation of your unit or the information in this manual, contact our Sales Department.

Performance of installation, operation, or maintenance procedures other than those described in this manual may result in a hazardous situation and may void the manufacturer's warranty.

Observe all warning labels.

Never remove warning labels.

Never operate damaged or leaking equipment.

Never operate the unit without bath fluid in the bath.

Always turn off the unit and disconnect the line cord from the power source before performing any service or maintenance procedures, or before moving the unit.

Always empty the bath before moving the unit.

Never operate equipment with damaged line cords.

Refer service and repairs to a qualified technician.

In addition to the warnings listed above, warnings are posted throughout the manual. These warnings are designated by an exclamation mark inside an equilateral triangle with text highlighted in bold print. Read and follow these important instructions. Failure to observe these instructions can result in permanent damage to the unit, significant property damage, or personal injury, or death.

Section II General Information

Description

The RTE Constant Temperature Baths are designed to provide temperature control for applications requiring a fluid work area or pumping to an external system. The RTE-4 is designed for close loop circulation, the RTE-8 for closed loop and open vessel circulation.

The units consist of an air-cooled refrigeration system, heater, circulation pump, stainless steel bath, and a temperature controller.

Specifications

	RTE-4	RTE-8
Temperature Range	-30°C to +100°C	
Temperature Stability	±0.01°C	
Cooling Capacity[1]	500 watts at 20°C	
Pump Capacity[1,2]	"F" Pump - 13 liters per minute @ 0' Head, 10' Max "Z" Pump - 13 liters per minute @ 0' Head, 17' Max	
Heater	1000 watts	
Bath Work Area *(L x W x D)* *Inches* *Centimeters*	 1 x 4¾ x 9 2.5 x 12.1 x 22.9	 8¼ x 5¼ x 9 20.9 x 13.3 x 22.9
Bath Volume *Gallons* *Liters*	 1.3 5.0	 2.5 10
Unit Dimensions *(H x W x D)* *Inches* *Centimeters*	 17½ x 16 x 17 44.5 x 40.6 x 43.2	 17½ x 16 x 17 44.5 x 40.6 x 43.2

Specifications subject to change.

1. Reduce 17% for 50Hz operation.
2. The "F" pump is designed for close loop circulation only. The "Z" pump is designed for close loop and open circulation.

Section III Installation & Operation

Site

The unit should be located on a sturdy table or bench top. The units will retain their full rated capacity at air intake temperatures up to approximately 80°F (27°C). Higher temperatures will reduce the load handling capability.



Never place the unit in a location where excessive heat, moisture, or corrosive materials are present.

A minimum clearance of 30 centimeters (12 inches) between the rear of the unit and the nearest wall is required for adequate ventilation through the pump box. This space will also accommodate the pump connections.

Excessively dusty areas should be avoided and a periodic cleaning schedule should be instituted (see Section VI, Cleaning).

Electrical Requirements



The unit construction provides extra protection against the risk of electric shock by grounding appropriate metal parts. The extra protection may not function unless the power cord is connected to a properly grounded outlet. It is your responsibility to assure that a proper ground connection is provided.

Refer to the serial number label on the rear of the unit to identify the specific electrical requirements of your unit.

Ensure the voltage of the power source meets the specified voltage, ±10%.

The units are equipped with heater fuses located in the rear of the unit. 115 Volt units require a 10 Amp fuse, 230 Volt units require a 5 Amp fuse.

Plumbing Requirements

Hose Connections

The pump connections are located at the rear of the pump box. These connections are 3/8" O.D. stainless steel serrated pipes which accept 3/8" I.D. or 5/16" I.D. tubing.

NOTE: If the bath is not used for external circulation, plug the RTE inlet line to prevent aeration and lowering the unit's cooling capacity.

Flexible tubing, if used, should be of heavy wall or reinforced construction. Make sure all tubing connections are securely clamped. Avoid running tubing near radiators, hot water pipes, etc. If substantial lengths of tubing are necessary, insulation may be required for improved temperature control.

It is important to keep the distance between the unit and your application as short as possible and to use the largest diameter tubing practical. Tubing should be straight and without bends. If diameter reductions are required, they should be made at your application, not at the unit. **NOTE:** Use of smaller diameter tubing will reduce the flow specifications.

Flow Control
The flow adjustment knob is located directly in front of the control panel and is clearly labeled. To start flow turn the knob counterclockwise. **NOTE:** Do not over tighten the knob in either the open or closed position.

Circulating to an open container

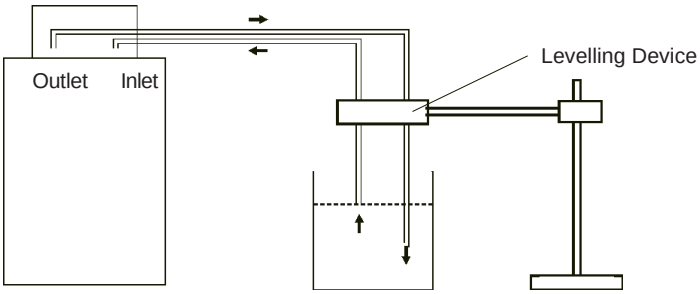

A stainless steel leveling device is available to aid circulation to an open vessel. Contact our Sales Department for more information (see Preface).

Support the leveling device over the open container with a ringstand. Stagger the tubes in the leveling device so one tube is submerged in the vessel fluid, and the other tube is level with the fluid surface. Connect the deeper tube to the pump outlet and the shorter tube to the pump inlet.

Adjust the flow rate. When properly adjusted, the pump inlet will draw an occasional air bubble to prevent overflow, and the pump outlet will force fluid through the submerged tube to prevent aeration of the vessel.

To avoid siphoning the bath work area when the unit is shut off, lift the leveling device out of the vessel and above the level of the unit.

Fluids

Never use flammable or corrosive fluids with this unit.

The selected fluid must have a viscosity of 50 centistokes or less at the lowest operating temperature. Filtered tap water is the recommended fluid for operation from +7°C to +80°C.

Below +7°C, a 50/50 mixture, by volume, of filtered tap water and laboratory grade ethylene glycol is suggested.

Above +80°C, the user is responsible for fluids used.

Filling Requirements

Fill the reservoir to within 3/4" of the top plate to insure contact of all refrigerant coils with the bath fluid. Do not allow the bath fluid level to fall below 2 1/2" of the top. Heater burn out and aeration of bath fluid will occur if bath fluid level is too low.



If the correct fluid level is not maintained, the heater will be exposed and may become damaged.

NOTE: When pumping to an external system be sure to have additional bath fluid on hand to compensate for the loss in volume to the system. Also, when the RTE is used to maintain temperatures below 8°C, a non-freezing fluid should be used.



Never run the unit when the work area is empty. Avoid overfilling. Overfilling the bath may damage the insulation, and affects stability as well as low-end performance.

Temperature Adjustment

The units are designed from a functional/use standpoint. Two switches and the temperature setting dials control all operations. When temperature control below 40°C to 45°C is desired, the compressor must be switched “on”’. When operating above 40°C to 45°C, the compressor must be switched “off’.

Rotate the small fine control dial to the twelve o’clock position. Rotate the large coarse temperature setting dial to the desired control temperature. The temperature reference setting is the white line located at the nine o’clock position.

As the bath approaches the setpoint temperature, the heat indicator light will cycle. Within a few minutes the bath temperature will stabilize. The fine control adjustment is now used for precise temperature setting. Fine temperature setting should be made with the aid of an external thermometer.

NOTE: On units capable of accepting the temperature programmers, there is a toggle switch located on the rear of the control box. When the bath is used without the temperature programmer the switch must be placed in the OFF position.

High Temperature/Low Liquid Level Safety

All bath models are equipped with a High Temperature/Low Liquid Level Safety Cut out. A single temperature sensing probe is used to control both functions. By attaching the sensing probe to the heater, low liquid level will be detected when the exposed surface of the heater becomes hot and shuts off the bath.

To set the High Temperature/Low Liquid Level Safety, locate the adjustment dial on the rear of the control box. Turn the dial fully clockwise and depress the reset button, start the bath and allow it to stabilize at the desired operating temperature. Turn the dial in a counterclockwise direction until the bath stops. Note the position of the dial where the reset button disengages and bath stops. Turn the dial clockwise past the point where the bath stopped and depress the button. (If the refrigeration was on wait approximately three minutes before depressing the reset button.) Turn the dial counterclockwise to a point just above that where the bath originally stopped (approximately 3/5 of one whole division).

With the temperature safety set in this position the entire bath will be shut down on excess bath temperature or low liquid level. Correct the problem and depress the reset button to start the bath.

PST Pre-Set Temperature Option

The factory installed PST Pre-Set Temperature Option is available on both units. A three position selector knob located on the control box allows you to preset *two* most frequently used temperatures in addition to having full use of the calibrated control knob.

Set the selector knob to the position marked dial. The main control knob can now be used to set the bath temperature. Turn knob to the position marked “Tl”. Using a jewelers screwdriver, turn the small set screw to dial in the desired operation temperature. Turning the set screw in a clockwise direction will increase the bath temperature. An external thermometer should be used to make accurate settings.

Repeat this procedure with selector knob in the “T2” position to dial in the second frequently used temperature. Once the temperatures are set, switching the dial to position Tl or T2 will automatically bring the bath to the preset temperatures.

Section IV Maintenance & Troubleshooting

Cleaning

Periodically clean the case and stainless steel bath using a mild soapy solution. **Do not use steel wool; it is too abrasive and will lead to rusting.** Dry the bath using a soft cloth.

For proper operation, the unit needs to pull substantial amounts of air through the condenser. A build up of dust or debris on the fins of the condenser will lead to a loss of cooling capacity. Periodic cleaning of the condenser is necessary.

The frequency of the cleaning depends on the operating environment. After initial installation, we recommend a monthly visual inspection. After several months, the frequency of cleaning will be established.

Algae

To restrict the growth of algae in the bath, it is recommended that the bath cover be kept in place and that all circulation lines be opaque. This will minimize the entrance of light required for the growth of most common algae.

NESLAB recommends the use of Chloramine-T, 1 gram per 3.5 liters.

Checklist

Unit will not start
Make sure the voltage of the power source meets the specified voltage, ±10%. Refer to the serial number label on the rear of the unit to identify the specific electrical requirements of your unit.

Check the high temp safety. Ensure the correct fluid level in the bath is between baffle marks and the high temp setting is greater than the bath temperature. Reset the safety and attempt to restart.

No external circulation
Check for obstructions, kinks, or leaks in the circulation tubing.

Circulation will cease when the pump head pressure has been exceeded.

Check the high temp safety. Ensure the correct fluid level in the bath is between baffle marks and the high temp setting is greater than the bath temperature. Reset the safety and attempt to restart.

Loss of Cooling Capacity
Be sure the refrigeration is on and the temperature set to the desired value.

Check the position of the temperature programmer toggle switch.

Be sure the cooling capacity of the unit has not been exceeded if circulating to an external system.

When the unit is shut off, wait approximately ten minutes before restarting. This allows time for the refrigeration pressures to equalize. If the pressures are

not allowed to equalize, the compressor will short-cycle (clicking sound) and no cooling will occur.

Proper ventilation is required for heat removal. Make sure ventilation through the unit is not impeded and free of dust and debris.

Ice build up on the cooling coil can act as insulation and lower the cooling capacity. Raise the temperature of the bath to deice the cooling coil and increase the concentration of non-freezing fluid.

Loss of Heating Capacity
Be sure the refrigeration is off and the temperature set to the desired value.

Check the position of the temperature programmer toggle switch.

Check the fuses on the rear of the unit.

Service Assistance

If, after following these troubleshooting steps, your unit fails to operate properly, contact our Service Department for assistance. Our Service Department can also provide you with list of spare parts for your unit (see Preface, After-sale Support). Before calling, *please* obtain the following information:

BOM number

Serial Number

Voltage of power source

WARRANTY

NESLAB Instruments, Inc. warrants for 12 months from date of shipment any NESLAB unit according to the following terms.

Any part of the unit manufactured or supplied by NESLAB and found in the reasonable judgment of NESLAB to be defective in material or workmanship will be repaired at an authorized NESLAB Repair Depot without charge for parts or labor. The unit, including any defective part must be returned to an authorized NESLAB Repair Depot within the warranty period. The expense of returning the unit to the authorized NESLAB Repair Depot for warranty service will be paid for by the buyer. NESLAB's responsibility in respect to warranty claims is limited to performing the required repairs or replacements, and no claim of breach of warranty shall be cause for cancellation or recision of the contract of sales of any unit.

With respect to units that qualify for field service repairs, NESLAB's responsibility is limited to the component parts necessary for the repair and the labor that is required on site to perform the repair. Any travel labor or mileage charges are the financial responsibility of the buyer.

The buyer shall be responsible for any evaluation or warranty service call (including labor charges) if no defects are found with the NESLAB product.

This warranty does not cover any unit that has been subject to misuse, neglect, or accident. This warranty does not apply to any damage to the unit that is the result of improper installation or maintenance, or to any unit that has been operated or maintained in any way contrary to the operating or maintenance instructions specified in NESLAB's Instruction and Operation Manual. This warranty does not cover any unit that has been altered or modified so as to change its intended use.

In addition, this warranty does not extend to repairs made by the use of parts, accessories, or fluids which are either incompatible with the unit or adversely affect its operation, performance, or durability.

NESLAB reserves the right to change or improve the design of any unit without assuming any obligation to modify any unit previously manufactured.

THE FOREGOING EXPRESS WARRANTY IS IN LIEU OF ALL OTHER WARRANTIES, EXPRESSED OR IMPLIED, INCLUDING BUT NOT LIMITED TO WARRANTIES OR MERCHANTABILITY AND FITNESS FOR A PARTICULAR PURPOSE.

NESLAB'S OBLIGATION UNDER THIS WARRANTY IS STRICTLY AND EXCLUSIVELY LIMITED TO THE REPAIR OR REPLACEMENT OF DEFECTIVE COMPONENT PARTS AND NESLAB DOES NOT ASSUME OR AUTHORIZE ANYONE TO ASSUME FOR IT ANY OTHER OBLIGATION.

NESLAB ASSUMES NO RESPONSIBILITY FOR INCIDENTAL, CONSEQUENTIAL, OR OTHER DAMAGES INCLUDING, BUT NOT LIMITED TO LOSS OR DAMAGE TO PROPERTY, LOSS OF PROFITS OR REVENUE, LOSS OF THE UNIT, LOSS OF TIME, OR INCONVENIENCE.

This warranty applies to units sold in the United States. Any units sold elsewhere are warranted by the affiliated marketing company of NESLAB Instruments, Inc. This warranty and all matters arising pursuant to it shall be governed by the law of the State of New Hampshire, United States. All legal actions brought in relation hereto shall be filed in the appropriate state or federal courts in New Hampshire, unless waived by NESLAB.

RTE-5/5B & RTE-9/9B Refrigerated Bath Circulators

NESLAB Manual P/N 013529

Installation, Operation and Service Manual

RTE-5 & RTE-9 Bath and Circulator

Instruction and Operation Manual

Table of Contents

PREFACE

Unpacking 2
Warranty 2
After-sale Support 2

SECTION I
Safety

Warnings 3

SECTION II
General Information

Description 4
Specifications 4

SECTION III
Installation & Operation

Site 5
Electrical Requirements 5
Plumbing Requirements 5
Fluids 6
Filling Requirements 7
Temperature Adjustment 7
High Temperature Safety 8
PST Preset Temperature Option 8

SECTION IV
Maintenance/
Troubleshooting

Cleaning 9
Algae 9
Checklist 9
Service Assistance 10

SECTION VI
Warranty

Warranty 11

Preface

Unpacking

Retain all cartons and packing material until the unit is operated and found to be in good condition.

If the unit shows external or internal damage, or does not operate properly, contact the transportation company and file a damage claim. Under ICC regulations, this is your responsibility.

Warranty

Units have a warranty against defective parts and workmanship for one full year from date of shipment. See back page for more details.

After-sale Support

NESLAB is committed to customer service both during and after the sale. If you have questions concerning the operation of your unit contact our Sales Department, see back cover. If your unit fails to operate properly, or if you have questions concerning spare parts or Service Contracts, contact our Customer Service Department. Before calling, please obtain the following information from the unit's serial number label:

- *BOM number* _____
- *Serial number* _____

Section I Safety

Warnings

Make sure you read and understand all instructions and safety precautions listed in this manual before installing or operating your unit. If you have any questions concerning the operation of your unit or the information in this manual, contact our Sales Department.

Performance of installation, operation, or maintenance procedures other than those described in this manual may result in a hazardous situation and may void the manufacturer's warranty.

Observe all warning labels.

Never remove warning labels.

Never operate damaged or leaking equipment.

Never operate the unit without bath fluid in the bath.

Always turn off the unit and disconnect the line cord from the power source before performing any service or maintenance procedures, or before moving the unit.

Always empty the bath before moving the unit.

Never operate equipment with damaged line cords.

Refer service and repairs to a qualified technician.

In addition to the warnings listed above, warnings are posted throughout the manual. These warnings are designated by an exclamation mark inside an equilateral triangle with text highlighted in bold print. Read and follow these important instructions. Failure to observe these instructions can result in permanent damage to the unit, significant property damage, or personal injury, or death.

Section II General Information

Description

The RTE Constant Temperature Baths are designed to provide temperature control for applications requiring a fluid work area or pumping to an external system. The units are capable of closed loop circulation.

The units consist of an air-cooled refrigeration system, heater, circulation pump, stainless steel bath, and a temperature controller. The RTE-5 and RTE-9 have increased temperature stability and uniformity, and can interface with the ETP Temperature Programmer and DCR-1 Digital Control Readout.

Specifications

	RTE-5	RTE-5B	RTE-9	RTE-9B
Temperature Range	-20°C to +100°C			
Temperature Stability	±0.01°C	±0.1°C	±0.01°C	±0.1°C
Temperature Uniformity	±0.02°C	±0.1°C	±0.02°C	±0.1°C
Cooling Capacity[1]	400 Watts at 20°C Bath Temp 200 Watts at 0° Bath Temp 100 Watts at -20°C Bath Temp			
Cooling Rate *(+20°C to -20°C)*	40 Minutes		60 Minutes	
Pump Capacity[1,2]	"F" Pump - 13 liters per minute @ 0' Head, 10' Max "Z" Pump - 13 liters per minute @ 0' Head, 17' Max			
Bath Work Area	8 38" x 2" x 5 3/8" Deep		8 3/8" x 5 1/2" x 5 3/8" Deep	
Bath Volume	4.2 Liters		6.4 Liters	
Unit Dimensions	11" x 13" x 20"D			

Specifications subject to change.

1. Reduce 17% for 50Hz operation.
2. The "F" pump is designed for close loop circulation only. The "Z" pump is designed for close loop and open circulation.

Section III Installation & Operation

Site

The unit should be located on a sturdy table or bench top. The units will retain their full rated capacity at air intake temperatures up to approximately 80°F (27°C). Higher temperatures will reduce the load handling capability.



Never place the unit in a location where excessive heat, moisture, or corrosive materials are present.

A minimum clearance of 30 centimeters (12 inches) between the rear of the unit and the nearest wall is required for adequate ventilation through the pump box. This space will also accommodate the pump connections.

Excessively dusty areas should be avoided and a periodic cleaning schedule should be instituted (see Section VI, Cleaning).

Electrical Requirements



The unit construction provides extra protection against the risk of electric shock by grounding appropriate metal parts. The extra protection may not function unless the power cord is connected to a properly grounded outlet. It is your responsibility to assure that a proper ground connection is provided.

Refer to the serial number label on the rear of the unit to identify the specific electrical requirements of your unit.

Ensure the voltage of the power source meets the specified voltage, ±10%.

The units are equipped with heater fuses located in the rear of the unit. 115 Volt units require a 10 Amp fuse, 230 Volt units require a 5 Amp fuse.

Plumbing Requirements

Hose Connections

The pump connections are located at the rear of the pump box. These connections are 3/8" O.D. stainless steel serrated pipes which accept 3/8" I.D. or 5/16" I.D. tubing.

NOTE: If the bath is not used for external circulation, plug the RTE inlet line to prevent aeration and lowering the unit's cooling capacity.

Flexible tubing, if used, should be of heavy wall or reinforced construction. Make sure all tubing connections are securely clamped. Avoid running tubing near radiators, hot water pipes, etc. If substantial lengths of tubing are necessary, insulation may be required for improved temperature control.

It is important to keep the distance between the unit and your application as short as possible and to use the largest diameter tubing practical. Tubing should be straight and without bends. If diameter reductions are required, they should be made at your application, not at the unit. **NOTE:** Use of smaller diameter tubing will reduce the flow specifications.

Flow Control
The flow adjustment knob is located directly in front of the control panel and is clearly labeled. To start flow turn the knob counterclockwise. **NOTE:** Do not over tighten the knob in either the open or closed position.

Circulating to an open container

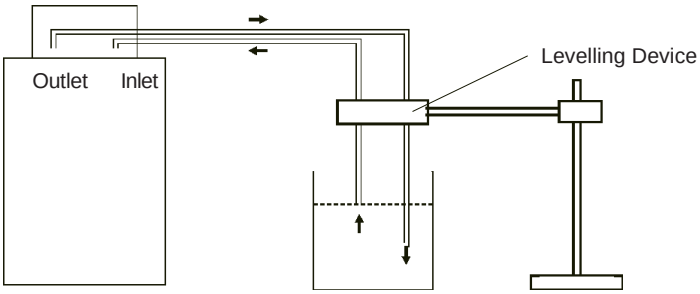

A stainless steel leveling device is available to aid circulation to an open vessel. Contact our Sales Department for more information (see Preface).

Support the leveling device over the open container with a ringstand. Stagger the tubes in the leveling device so one tube is submerged in the vessel fluid, and the other tube is level with the fluid surface. Connect the deeper tube to the pump outlet and the shorter tube to the pump inlet.

Adjust the flow rate. When properly adjusted, the pump inlet will draw an occasional air bubble to prevent overflow, and the pump outlet will force fluid through the submerged tube to prevent aeration of the vessel.

To avoid siphoning the bath work area when the unit is shut off, lift the leveling device out of the vessel and above the level of the unit.

Fluids

Never use flammable or corrosive fluids with this unit.

The selected fluid must have a viscosity of 50 centistokes or less at the lowest operating temperature. Filtered tap water is the recommended fluid for operation from +7°C to +80°C.

Below +7°C, a 50/50 mixture, by volume, of filtered tap water and laboratory grade ethylene glycol is suggested.

Above +80°C, the user is responsible for fluids used.

Filling Requirements

Fill the reservoir to within 3/4" of the top plate to insure contact of all refrigerant coils with the bath fluid. Do not allow the bath fluid level to fall below 2 1/2" of the top. Heater burn out and aeration of bath fluid will occur if bath fluid level is too low.



If the correct fluid level is not maintained, the heater will be exposed and may become damaged.

NOTE: When pumping to an external system be sure to have additional bath fluid on hand to compensate for the loss in volume to the system. Also, when the RTE is used to maintain temperatures below 8°C, a non-freezing fluid should be used.



Never run the unit when the work area is empty. Avoid overfilling. Overfilling the bath may damage the insulation, and affects stability as well as low-end performance.

Temperature Adjustment

The units are designed from a functional/use standpoint. A single three-position toggle switch located toward the bottom of the control box controls power to the bath. When operating in the range of-20°C to +35°C lift up on the toggle switch. The two indicator lights near the switch will illumunate, indicating that both the temperature control system/circulator and refrigeration system are on.

When operating above +35°C push down on the toggle switch. Only the temperature control system/circulator will operate, the refrigeation compressor will remain off.



Never operate the compressor when the bath temperature is above 45°C.

To set the bath operating temperature rotate the large coarse temperature setting dial to the desired control temperature. The temperature reference setting is the white line located at the nine o'clock position.

As the bath approaches the setpoint temperature, the heat indicator light will cycle. Within a few minutes the bath temperature will stabilize. On the RTE-5 and RTE-9 the fine control adjustment is now used for precise temperature setting. Fine temperature setting should be made with the aid of an external thermometer.

NOTE: The RTE-5 and RTE-9 are capable of accepting the temperature programmers, there is a toggle switch located on the rear of the control box. When the bath is used without the temperature programmer the switch must be placed in the OFF position.

High Temperature/Low Liquid Level Safety

All bath models are equipped with a High Temperature/Low Liquid Level Safety Cut out. A single temperature sensing probe is used to control both functions. By attaching the sensing probe to the heater, low liquid level will be detected when the exposed surface of the heater becomes hot and shuts off the bath.

To set the High Temperature/Low Liquid Level Safety, locate the adjustment dial on the rear of the control box. Turn the dial fully clockwise and depress the reset button, start the bath and allow it to stabilize at the desired operating temperature. Turn the dial in a counterclockwise direction until the bath stops. Note the position of the dial where the reset button disengages and bath stops. Turn the dial clockwise past the point where the bath stopped and depress the button. (If the refrigeration was on wait approximately three minutes before depressing the reset button.) Turn the dial counterclockwise to a point just above that where the bath originally stopped (approximately 3/5 of one whole division).

With the temperature safety set in this position the entire bath will be shut down on excess bath temperature or low liquid level. Correct the problem and depress the reset button to start the bath.

PST Pre-Set Temperature Option

The factory installed PST Pre-Set Temperature Option is available on the RTE-5 and RTE-9. A three position selector knob located on the control box allows you to preset *two* most frequently used temperatures in addition to having full use of the calibrated control knob.

Set the selector knob to the position marked dial. The main control knob can now be used to set the bath temperature. Turn knob to the position marked “Tl”. Using a jewelers screwdriver, turn the small set screw to dial in the desired operation temperature. Turning the set screw in a clockwise direction will increase the bath temperature. An external thermometer should be used to make accurate settings.

Repeat this procedure with selector knob in the “T2” position to dial in the second frequently used temperature. Once the temperatures are set, switching the dial to position Tl or T2 will automatically bring the bath to the preset temperatures.

Section IV Maintenance & Troubleshooting

Cleaning

Periodically clean the case and stainless steel bath using a mild soapy solution. **Do not use steel wool; it is too abrasive and will lead to rusting.** Dry the bath using a soft cloth.

For proper operation, the unit needs to pull substantial amounts of air through the condenser. A build up of dust or debris on the fins of the condenser will lead to a loss of cooling capacity. Periodic cleaning of the condenser is necessary.

The frequency of the cleaning depends on the operating environment. After initial installation, we recommend a monthly visual inspection. After several months, the frequency of cleaning will be established.

Algae

To restrict the growth of algae in the bath, it is recommended that the bath cover be kept in place and that all circulation lines be opaque. This will minimize the entrance of light required for the growth of most common algae.

NESLAB recommends the use of Chloramine-T, 1 gram per 3.5 liters.

Checklist

Unit will not start
Make sure the voltage of the power source meets the specified voltage, ±10%. Refer to the serial number label on the rear of the unit to identify the specific electrical requirements of your unit.

Check the high temp safety. Ensure the correct fluid level in the bath is between baffle marks and the high temp setting is greater than the bath temperature. Reset the safety and attempt to restart.

No external circulation
Check for obstructions, kinks, or leaks in the circulation tubing.

Circulation will cease when the pump head pressure has been exceeded.

Check the high temp safety. Ensure the correct fluid level in the bath is between baffle marks and the high temp setting is greater than the bath temperature. Reset the safety and attempt to restart.

Loss of Cooling Capacity
Be sure the refrigeration is on and the temperature set to the desired value.



Never operate the compressor when the bath temperature is above 45°C.

Check the position of the temperature programmer toggle switch.

Be sure the cooling capacity of the unit has not been exceeded if circulating to an external system.

When the unit is shut off, wait approximately ten minutes before restarting. This allows time for the refrigeration pressures to equalize. If the pressures are not allowed to equalize, the compressor will short-cycle (clicking sound) and no cooling will occur.

Proper ventilation is required for heat removal. Make sure ventilation through the unit is not impeded and free of dust and debris.

Ice build up on the cooling coil can act as insulation and lower the cooling capacity. Raise the temperature of the bath to deice the cooling coil and increase the concentration of non-freezing fluid.

Loss of Heating Capacity
Be sure the refrigeration is off and the temperature set to the desired value.

Check the position of the temperature programmer toggle switch.

Check the fuses on the rear of the unit.

Service Assistance

If, after following these troubleshooting steps, your unit fails to operate properly, contact our Service Department for assistance. Our Service Department can also provide you with list of spare parts for your unit (see Preface, After-sale Support). Before calling, *please* obtain the following information:

BOM number

Serial Number

Voltage of power source

WARRANTY

NESLAB Instruments, Inc. warrants for 12 months from date of shipment any NESLAB unit according to the following terms.

Any part of the unit manufactured or supplied by NESLAB and found in the reasonable judgment of NESLAB to be defective in material or workmanship will be repaired at an authorized NESLAB Repair Depot without charge for parts or labor. The unit, including any defective part must be returned to an authorized NESLAB Repair Depot within the warranty period. The expense of returning the unit to the authorized NESLAB Repair Depot for warranty service will be paid for by the buyer. NESLAB's responsibility in respect to warranty claims is limited to performing the required repairs or replacements, and no claim of breach of warranty shall be cause for cancellation or recision of the contract of sales of any unit.

With respect to units that qualify for field service repairs, NESLAB's responsibility is limited to the component parts necessary for the repair and the labor that is required on site to perform the repair. Any travel labor or mileage charges are the financial responsibility of the buyer.

The buyer shall be responsible for any evaluation or warranty service call (including labor charges) if no defects are found with the NESLAB product.

This warranty does not cover any unit that has been subject to misuse, neglect, or accident. This warranty does not apply to any damage to the unit that is the result of improper installation or maintenance, or to any unit that has been operated or maintained in any way contrary to the operating or maintenance instructions specified in NESLAB's Instruction and Operation Manual. This warranty does not cover any unit that has been altered or modified so as to change its intended use.

In addition, this warranty does not extend to repairs made by the use of parts, accessories, or fluids which are either incompatible with the unit or adversely affect its operation, performance, or durability.

NESLAB reserves the right to change or improve the design of any unit without assuming any obligation to modify any unit previously manufactured.

THE FOREGOING EXPRESS WARRANTY IS IN LIEU OF ALL OTHER WARRANTIES, EXPRESSED OR IMPLIED, INCLUDING BUT NOT LIMITED TO WARRANTIES OR MERCHANTABILITY AND FITNESS FOR A PARTICULAR PURPOSE.

NESLAB'S OBLIGATION UNDER THIS WARRANTY IS STRICTLY AND EXCLUSIVELY LIMITED TO THE REPAIR OR REPLACEMENT OF DEFECTIVE COMPONENT PARTS AND NESLAB DOES NOT ASSUME OR AUTHORIZE ANYONE TO ASSUME FOR IT ANY OTHER OBLIGATION.

NESLAB ASSUMES NO RESPONSIBILITY FOR INCIDENTAL, CONSEQUENTIAL, OR OTHER DAMAGES INCLUDING, BUT NOT LIMITED TO LOSS OR DAMAGE TO PROPERTY, LOSS OF PROFITS OR REVENUE, LOSS OF THE UNIT, LOSS OF TIME, OR INCONVENIENCE.

This warranty applies to units sold in the United States. Any units sold elsewhere are warranted by the affiliated marketing company of NESLAB Instruments, Inc. This warranty and all matters arising pursuant to it shall be governed by the law of the State of New Hampshire, United States. All legal actions brought in relation hereto shall be filed in the appropriate state or federal courts in New Hampshire, unless waived by NESLAB.

WARRANTY

NESLAB Instruments, Inc. warrants for 12 months from date of shipment any NESLAB unit according to the following terms.

Any part of the unit manufactured or supplied by NESLAB and found in the reasonable judgment of NESLAB to be defective in material or workmanship will be repaired at an authorized NESLAB Repair Depot without charge for parts or labor. The unit, including any defective part must be returned to an authorized NESLAB Repair Depot within the warranty period. The expense of returning the unit to the authorized NESLAB Repair Depot for warranty service will be paid for by the buyer. NESLAB's responsibility in respect to warranty claims is limited to performing the required repairs or replacements, and no claim of breach of warranty shall be cause for cancellation or recision of the contract of sales of any unit.With respect to units that qualify for field service repairs, NESLAB's responsibility is limited to the component parts necessary for the repair and the labor that is required on site to perform the repair. Any travel labor or mileage charges are the financial responsibility of the buyer.

The buyer shall be responsible for any evaluation or warranty service call (including labor charges) if no defects are found with the NESLAB product.

This warranty does not cover any unit that has been subject to misuse, neglect, or accident. This warranty does not apply to any damage to the unit that is the result of improper installation or maintenance, or to any unit that has been operated or maintained in any way contrary to the operating or maintenance instructions specified in NESLAB's Instruction and Operation Manual. This warranty does not cover any unit that has been altered or modified so as to change its intended use.

In addition, this warranty does not extend to repairs made by the use of parts, accessories, or fluids which are either incompatible with the unit or adversely affect its operation, performance, or durability.

NESLAB reserves the right to change or improve the design of any unit without assuming any obligation to modify any unit previously manufactured.

THE FOREGOING EXPRESS WARRANTY IS IN LIEU OF ALL OTHER WARRANTIES, EXPRESSED OR IMPLIED, INCLUDING BUT NOT LIMITED TO WARRANTIES OR MERCHANTABILITY AND FITNESS FOR A PARTICULAR PURPOSE.

NESLAB'S OBLIGATION UNDER THIS WARRANTY IS STRICTLY AND EXCLUSIVELY LIMITED TO THE REPAIR OR REPLACEMENT OF DEFECTIVE COMPONENT PARTS AND NESLAB DOES NOT ASSUME OR AUTHORIZE ANYONE TO ASSUME FOR IT ANY OTHER OBLIGATION.

NESLAB ASSUMES NO RESPONSIBILITY FOR INCIDENTAL, CONSEQUENTIAL, OR OTHER DAMAGES INCLUDING, BUT NOT LIMITED TO LOSS OR DAMAGE TO PROPERTY, LOSS OF PROFITS OR REVENUE, LOSS OF THE UNIT, LOSS OF TIME, OR INCONVENIENCE.

This warranty applies to units sold in the United States. Any units sold elsewhere are warranted by the affiliated marketing company of NESLAB Instruments, Inc. This warranty and all matters arising pursuant to it shall be governed by the law of the State of New Hampshire, United States. All legal actions brought in relation hereto shall be filed in the appropriate state or federal courts in New Hampshire, unless waived by NESLAB.

RTE-Series Refrigerated Bath/Circulator

Table of Contents

PREFACE

Compliance 2
Unpacking 2
Warranty 2
After-sale Support 2

SECTION I
Safety

Warnings 3

SECTION II
General Information

Description 4
Specifications 4

SECTION III
Installation

Site 5
Electrical Requirements 5
Plumbing Requirements 6
Fluids 8
Filling Requirements 8
Water Quality Standards and Recommendations 9

SECTION IV
Temperature Controller

Start Up 10
Controller Keypad & Display 10
Changing a Value 11
Controller Displays 11
Operator's Loop 12
Setup Loop 13
Error Messages 15
Autorefill (Optional) 16
High Temperature/Low Liquid Level Safety 17
9-Pin Accessory Connectors 18

SECTION V
Maintenance

Service Contracts 19
Condenser 19
Reservoir Cleaning 20
Algae 20
Additional Loops 21
Calibration Loop 22
Calibration Procedure 22

SECTION VI
Troubleshooting

Checklist 24
Service Assistance and Technical Support 24

SECTION VII
Programming Software/
RS232 Communication 25

WARRANTY

Preface

Compliance

Products tested and found to be in compliance with the requirements defined in the EMC standards defined by 89/336/EEC as well as Low Voltage Directive (LVD) 73/23/EEC can be identified by the CE label on the rear of the unit. The testing has demonstrated compliance with the following directives:

LVD, 73/23/EEC	Complies with UL 3101-1:93
EMC, 89/336/EEC	EN 55011, Class A Verification EN 50082-1:1992 IEC 1000-4-2:1995 IEC 1000-4-3:1994 IEC 1000-4-4:1995

For any additional information refer to the Letter of Compliance that shipped with the unit (Declaration of Conformity).

Unpacking

Retain all cartons and packing material until the unit is operated and found to be in good condition. If the unit shows external or internal damage, or does not operate properly, contact the transportation company and file a damage claim. Under ICC regulations, this is your responsibility.

Warranty

Units have a warranty against defective parts and workmanship for one year from date of shipment. See back page for more details.

After-sale Support

NESLAB is committed to customer service both during and after the sale. If you have questions concerning the operation of your unit, contact our Sales Department. If your unit fails to operate properly, or if you have questions concerning spare parts or Service Contracts, contact our Customer Service Department. Before calling, please obtain the following information from the unit's serial number label:

- *BOM number* _____
- *Serial number* _____

Section I Safety

Warnings

Make sure you read and understand all instructions and safety precautions listed in this manual before installing or operating your unit. If you have any questions concerning the operation of your unit or the information in this manual, contact our Sales Department.

Performance of installation, operation, or maintenance procedures other than those described in this manual may result in a hazardous situation and may void the manufacturer's warranty.

Transport the unit with care. Sudden jolts or drops can damage the refrigeration lines. The units weigh approximately: RTE-111, 86 pounds (390 kilograms); RTE-211, 99 pounds (45 kilograms); RTE-221, 106 pounds (48 kilograms). Units should be transported with equipment designed to lift these weights.

Observe all warning labels.

Never remove warning labels.

Never operate damaged or leaking equipment.

Never operate the unit without bath fluid in the bath.

Never use pure ethylene glycol as a bath fluid. Above 80°C the user is responsible for the fluid used.

For 220 - 240 volt units supplied without a line cord, use a harmonized (HAR) grounded 3-conductor cord, type H 0 5 V V - F , with conductors listed below. A suitable cord end is required for connecting to the equipment (see unit socket) and must terminate with an IEC approved plug for proper connection to power supply.

RTE-111 and RTE-211	**Nominal 1.0 mm^2 cross section rated 10 Amps Unit Socket: IEC - 320 C13**
RTE-221	**Nominal 1.5 mm^2 cross section rated 16 Amps Unit Socket: IEC - 320 C19**

Always turn off the unit and disconnect the line cord from the power source before performing any service or maintenance procedures, or before moving the unit.

Always empty the bath before moving the unit.

Never operate equipment with damaged line cords.

Refer service and repairs to a qualified technician.

In addition to the safety warnings listed above, warnings are posted throughout the manual. These warnings are designated by an exclamation mark inside an equilateral triangle with text highlighted in bold print. Read and follow these important instructions. Failure to observe these instructions can result in permanent damage to the unit, significant property damage, personal injury or death.

Section II General Information

Description

The RTE-Series Refrigerated Bath/Circulators are designed to provide temperature control for applications requiring a fluid work area or pumping to an external system.

Units consists of a non-CFC air-cooled refrigeration system, circulation pump, seamless stainless steel bath, work area cover, and a temperature controller.

Specifications

	RTE-111	RTE-211	RTE-221
Temperature Range[1]	-25°C to +150°C		-23°C to +150°C
Temperature Stability[2,3,4]	±0.01°C		
Cooling Capacity[2,5] *Watts* *BTU/H*	500 1705		
Pump Capacity	15 lpm at 0' (0 M) 0 lpm at 16' (4.9 M)		
Heater (Watts) *60 Hz Models* *50 Hz Models*	800 1000	800 1000	1600 1800
Bath Work Area *(L x W x D)* *Inches* *Centimeters*	4 3/4 x 8 x 6 12.1 x 20.3 x 15.3	9 1/4 x 10 x 6 23.5 x 25.4 x 15.2	9 1/4 x 10 x 9 23.5 x 25.4 x 22.9
Bath Volume *Gallons/Liters*	1.9/7.0	3.2/12.25	5.4/20.5
Case Dimensions *(H x W x D)* *Inches* *Centimeters*	25 x 10 5/16 x 15 7/8 63.5 x 26.2 x 40.3	25 x 12 3/8 x 18 3/8 63.5 x 31.4 x 46.7	27 7/8 x 12 3/8 x 18 3/8 70.8 x 31.4 x 46.7
Power Requirements[6]	115 V, 60 Hz 220/240 V, 50 Hz		

1. Low end temperature for 50Hz units is -18°C, -23°C and -21°C respectively.
2. Specifications listed for units operating at +20°C bath temperature, +20°C (+70°F) ambient, with tap water as bath fluid.
3. For operation below 0°C, covering the bath work area may improve stability.
4. For some applications, agitation and stability above ambient may be improved by connecting a small length of hose between the pump connections on the rear of the unit.
5. 50 Hz RTE-111 units have a 375 watt cooling capacity.
6. Control transformer fusing - 115VAC units = (T=Time Delay) 500mA 250V 5 x 20mm (Qty 1), 220VAC units =[T=Time Delay] 250mA 250V to 5 x 20mm (Qty 2).
   Bussman fusing part numbers: 500mA fuse = Bussman S504-500mA
   250mA fuse = Bussman S504-250mA

Section III Installation

Site

The indentations on the unit's sides are designed to function as handles. Lift the unit by the handles and locate it on a sturdy work area. Ambient temperatures should be inside the range of +50°F to +80°F (+10°C to +27°C).



Never place the unit in a location where excessive heat, moisture, or corrosive materials are present.

The unit has an air-cooled refrigeration system. Air is drawn through the front panel and discharged through the rear panel. The unit must be positioned so the air intake and discharge are not impeded. A minimum clearance of 12 inches (30 centimeters) at the front and rear of the unit is necessary for adequate ventilation. Inadequate ventilation will reduce cooling capacity and, in extreme cases, can cause compressor failure.

Excessively dusty areas should be avoided and a periodic cleaning schedule should be instituted (see Section VI, Cleaning).

The unit will retain its full rated capacity in ambient temperatures up to approximately +75°F (+24°C). Above +75°F, derate the cooling capacity 1% for every 1°F above +75°F, to a maximum ambient temperature of +95°F. In terms of Celsius, derate the cooling capacity 1% for every 0.5°C above +24°C, to a maximum ambient temperature of +35°C.

Electrical Requirements



Line voltage may be easily accessible inside the pump/control box. Always unplug the unit prior to removing pump/control box cover.

Refer to the serial number label on the rear of the unit to identify the specific electrical requirements of your unit.

Ensure the voltage of the power source meets the specified voltage, ±10%.

The unit construction provides extra protection against the risk of electric shock by grounding appropriate metal parts. The extra protection may not function unless the power cord is connected to a properly grounded outlet. It is the user's responsibility to assure a proper ground connection is provided.



For 220 - 240 volt units supplied without a line cord, use a harmonized (HAR) grounded 3-conductor cord, type H 0 5 V V - F , with conductors listed below. A suitable cord end is required for connecting to the equipment (see unit socket) and must terminate with an IEC approved plug for proper connection to power supply.

RTE-111 and RTE-211	**Nominal 1.5 mm² cross section rated 16 Amps**
	Unit Socket: IEC - 320 C19
RTE-221	**Nominal 1.0 mm² cross section rated 10 Amps**
	Unit Socket: IEC - 320 C13

Plumbing Requirements



Ensure the unit is off before connecting tubing to the unit.

Hose Connections

The pump connections are located at the rear of the pump box and are labelled PUMP INLET and PUMP OUTLET. These connections are bent upward so the recirculating fluid will drain back into the reservoir when the hoses are disconnected. Both connections are capped with stainless steel serrated plugs.

The pump lines have ¼" MPT for mating with standard plumbing fittings. For your convenience stainless steel adapters, ¼" FPT to ⅜" O.D. serrated fitting, are provided. (To assure proper fit, they should be installed using 1½ turns of Teflon® tape around the threads.)

Flexible tubing, if used, should be of heavy wall or reinforced construction. Make sure all tubing connections are securely clamped. Avoid running tubing near radiators, hot water pipes, etc. If substantial lengths of tubing are necessary, insulation may be required to prevent loss of cooling capacity.

Tubing and insulation are available from NESLAB. Contact our Sales Department for more information (see Preface, After-sale Support).

It is important to keep the distance between the unit and the external system as short as possible, and to use the largest diameter tubing practical. Tubing should be straight and without bends. If diameter reductions must be made, make them at the inlet and outlet of the external system, not at the unit.

If substantial lengths of cooling lines are required, they should be pre-filled with bath fluid before connecting them to the unit. This will ensure that an adequate amount of fluid will be in the bath once it is in operation.

Pumping

The pump is designed to deliver a flow of 15 liters per minute (4 gallons per minute) at 0 feet head. To prevent external circulation, the PUMP INLET and PUMP OUTLET lines on the rear of the unit are capped. The caps must be removed when external circulation is required.

To properly secure external hose connections to the unit, wrap Teflon® tape around the pipe line threads before installation. Once the hose connections are made, the hoses must be properly plumbed to an external system. *It is important the bath is not in operation until all plumbing is complete.*

NOTE: To increase agitation in the bath when not circulating externally, connect a short loop of hose between the inlet and outlet lines.

If the bath is not used for external circulation or incresed agitation, make sure the stainless steel caps are in place prior to operating the bath.

Circulating to an open container

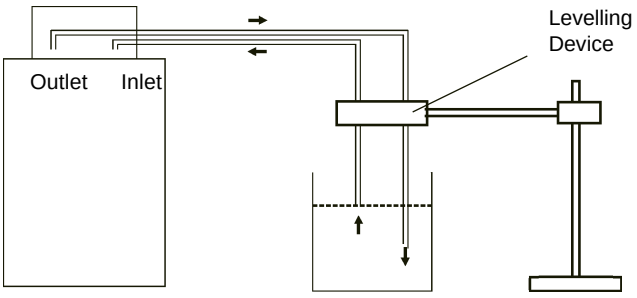

A stainless steel leveling device is available to aid circulation to an open vessel. Contact our Sales Department for more information (see Preface).

Support the leveling device over the open container with a ringstand. Stagger the tubes in the leveling device so one tube is submerged in the vessel fluid, and the other tube is level with the fluid surface. Connect the deeper tube to the PUMP OUTLET and the shorter tube to the PUMP INLET.

Adjust the flow rate using the accessory flow control valve connected to the PUMP OUTLET, or by partially restricting the outlet tubing. When properly adjusted, the pump inlet will draw an occasional air bubble to prevent over flow, and the pump outlet will force fluid through the submerged tube to prevent aeration of the vessel.

To avoid siphoning the bath work area when the unit is shut off, lift the leveling device out of the vessel and above the level of the unit.

Circulating through two closed loops

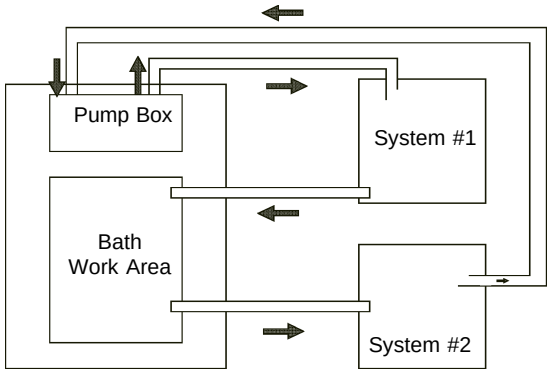

The pump can be used to circulate through two closed loop systems. Connect the shortest practical length of flexible tubing from the PUMP OUTLET to the inlet of external system #1. Connect the outlet of system #1 directly into the bath work area. Connect tubing from the bath work area to the inlet of system #2. Connect the outlet of system #2 to the PUMP INLET.

Drain



Ensure the temperature of the bath fluid is safe before draining the unit.

The unit is equipped with a drain located at the back of the unit at the base of the bath. The drain has ¼" MPT and is capped with a stainless steel plug. To drain the reservoir simply remove the cap.

To assure proper fit when replacing the cap, be sure to line the threads with 1½ turns of Teflon® tape.

Fluids



Never use flammable or corrosive fluids with this unit.

The selected fluid must have a viscosity of 50 centistokes or less at the lowest operating temperature.

Filtered tap water is the recommended fluid for operation from +8°C to +80°C. See Water Quality Standards and Recommendation on the next page.

For operation from -30°C to +8°C, a 50/50 mixture, by volume, of tap water and laboratory grade ethylene glycol is suggested.

Above +80°C and below -30°C, the user is responsible for fluids used.



Never use pure ethylene glycol as a bath fluid. Above 80°C the user is responsible for the fluid used.

Filling Requirements

The bath work area has a high and low level marker to guide filling. The markers are 1 inch horizontal slits located in the center of the stainless steel baffle separating the work area and the pump assembly. The correct fluid level falls between these two markers. The heating and cooling coils will be exposed and may become damaged if the correct fluid level is not provided.

When pumping to an external system, keep extra fluid on hand to maintain the proper level in both the circulating lines and the external system.



Never run the unit when the work area is empty.

Water Quality Standards and Recommendations

	Permissible (PPM)	Desirable (PPM)
Microbiologicals		
(algae, bacteria, fungi)	0	0
Inorganic Chemicals		
Calcium	<40	0.6
Chloride	250	<25
Copper	1.3	1.0
Iron	0.3	<0.1
Lead	0.015	0
Magnesium	<12	0.1
Manganese	0.05	<0.03
Nitrates\Nitrites	10 as N	0
Potassium	<20	0.3
Silicate	25	<1.0
Sodium	<20	0.3
Sulfate	250	<50
Hardness	17	<0.05
Total Dissolved Solids	50	10
Other Parameters		
pH	6.5-8.5	7-8
Resistivity	0.01*	0.05-0.1*

* Megohm-Cm (Compensated at 25°C)

Unfavorably high total ionized solids (TIS) can accelerate the rate of galvanic corrosion. These contaminants can function as electrolytes which increase the potential for galvanic cell corrosion and lead to localized corrosion such as pitting which can be observed at the studs and on the outside surface of cooling coils. Eventually, the pitting will become so extensive that the coil will leak refrigerant into the water reservoir.

For example, raw water in the U.S. averages 171 ppm (as NaCl). The recommended level for use in a water system is between 0.5 to 5.0 ppm (as NaCl).

Recommendation: Initially fill the tank with distilled/deionized water. Do not use untreated tap water as the total ionized solids level may be too high.

Maintain this water quality at a resistivity of between 1 to 10 megohm-cm (compensated at 25°C) by using a purification system. Although the initial fill may be as high as 10 megohm-cm (compensated at 25°C), the desired level for long time usage is 1 to 3 megohm-cm (compensated at 25°C).

The above two recommendations will reduce the electrolytic potential of the water and prevent or reduce the galvanic corrosion observed.

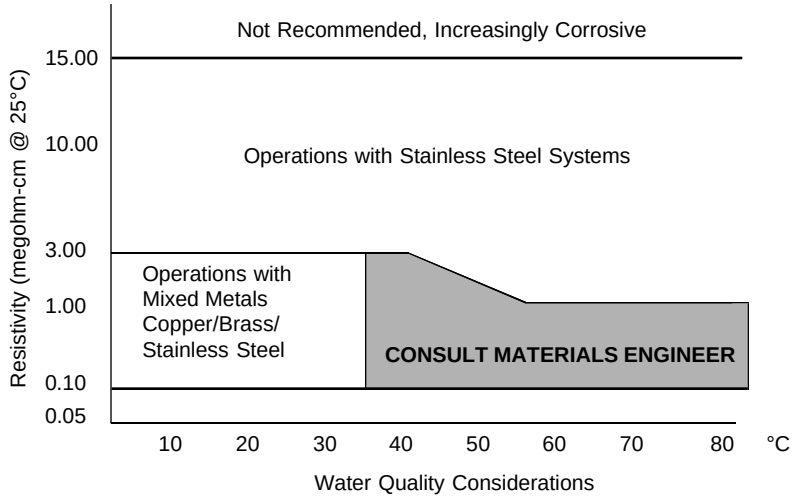

Section IV Temperature Controller

Start Up

Before starting the unit, check all electrical and plumbing connections and make sure the work area has been properly filled with bath fluid.

To start the bath press the I/O circuit breaker on the side of the control box to the **I** (power on) position. The pump will start and the controller will display the temperature of the fluid in the reservoir

The controller's COOL and HEAT indicators show the status of the refrigeration system and heater. The COOL indicator is lit when the refrigeration system is removing heat from the cooling fluid. The HEAT indicator is lit when the heater is on. The HEAT indicator flashes when the heater is pulsating. A balance between COOL and HEAT controls the temperature.

NOTE: Below 50°C the refrigeration system is on unless the setpoint is more than 2°C above the bath temperature. This allows for rapid heat up. Above 50°C the refrigeration system is off unless the setpoint is more than 2°C below the bath temperature. This allows for rapid cool down.

Controller Keypad & Display

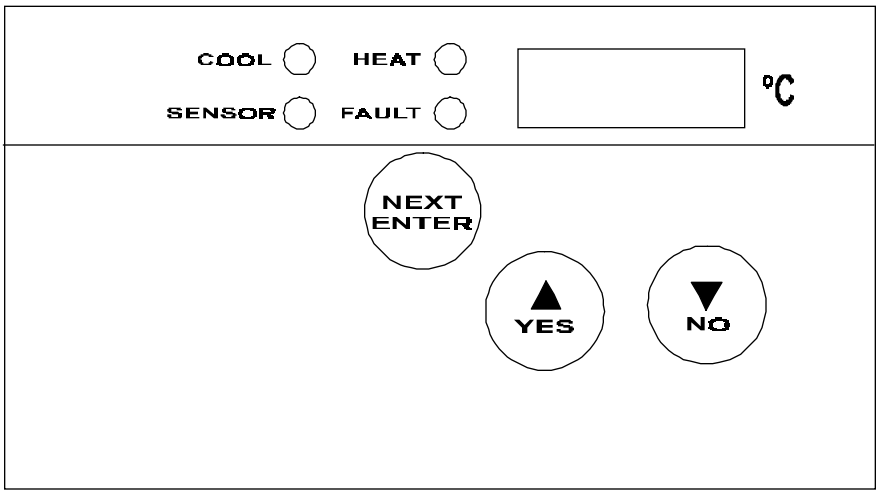

The digital controller controls temperature using a PID (Proportional-Integral-Derivative) algorithm. It is designed with self-diagnostic features and easy to use operator interface.

NEXT ENTER
Use this key to scroll forward through the menus and also to accept and save changes.

YES, ▲
This dual purpose key is used to answer Yes to Y/N questions or to increment numerical values upward for setting numeric values.

NO, ▼
This dual purpose key is used to answer No to Y/N questions or to decrement numerical values downward for setting numeric values.

Changing a Value

The **YES** key increments the value. The **NO** key decrements the value.

The display will flash as soon as either key is depressed, and will continue to flash until the **NEXT ENTER** key is pressed twice to accept the new value.

The new value will not be used by the controller until the **NEXT ENTER** key is depressed twice and the display stops flashing.

NOTE: If the **ENTER** key is not depressed twice within 10 seconds, the controller will time out and the new value will not be accepted. The controller will revert to the previous setpoint value.

The controller will not allow you to enter a value above the maximum (+150°C) or below the minimum (-25°C).

Controller Displays

An alphanumeric display presents numeric readings of various operating conditions within the bath. Display function is selected by pressing the appropriate keys to move through a menu of available information.

The controller has several loops. The Operator's Loop displays the bath temperature and is used to change the setpoint, see page 12. The Setup Loop is used to adjust the controller's PID parameters, select the internal or remote sensor, and set the high/low temperature limits. It is also used to select RS232 operation. See page 13-14. The Setup Loop can be accessed from the Operator's Loop by pressing and holding the key combinations shown on Figure 1 on the next page.

When the controller is first powered up it enters the Operator's Loop. The display will indicate the bath temperature.

NOTE: If altering any settings in the various loops, should you desire to return to the temperature display and abort any changes, keep pressing the **NEXT ENTER** until the display reads **Stor**, then press **NO.**

Operator's Loop

When the controller is first powered up it enters the Operator's Loop, displaying reservoir fluid temperature. Press the NEXT ENTER key to view the setpoint.

SP displays the controller setpoint. The display will flash between SP and the actual setpoint number. Use the YES/NO keys to change the setpoint value. Once the desired setpoint is displayed, press the NEXT ENTER key twice.

NOTE: If the bath is controlled via RS232 communications, the setpoint can not be changed from the keypad.

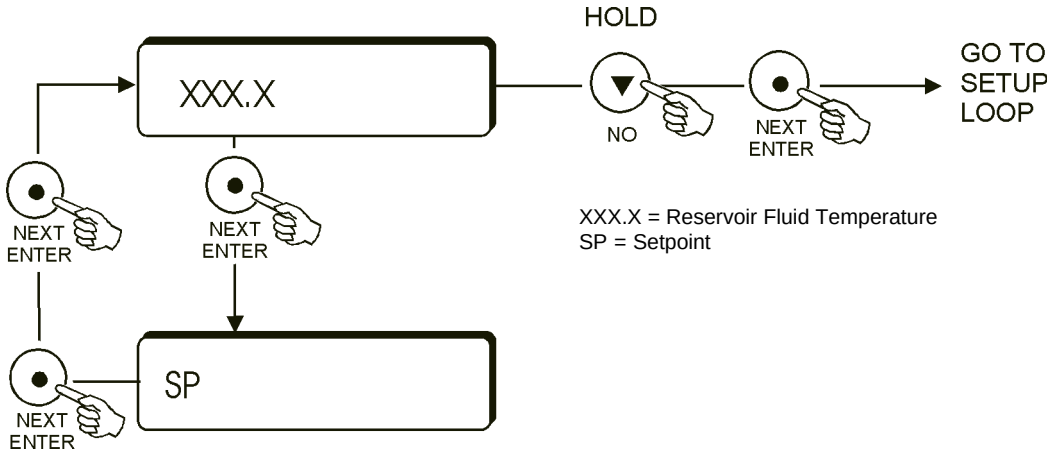

Figure 1 Operator's Loop

Setup Loop

The Setup Loop is used to adjust the controller's PID parameters, select the internal (1) or remote (2) sensor, and set the high/low temperature limits, and to select RS232 operation.

Enter the Setup Loop from the Operator's Loop by pressing and holding the NO key, then press the NEXT ENTER key. Use the YES/NO keys to adjust the values. Press the NEXT ENTER key twice to accept the new value.

While in the Setup Loop, if any key is not pressed during a one minute time span, the controller will automatically return to the Operator's Loop temperature display.

NOTE: If the unit exceeds either temperature limit, the appropriate error message will flash, see page 15. The unit will not shut down (unless the temperature exceeds the high temperature cutout setting, see page 17).

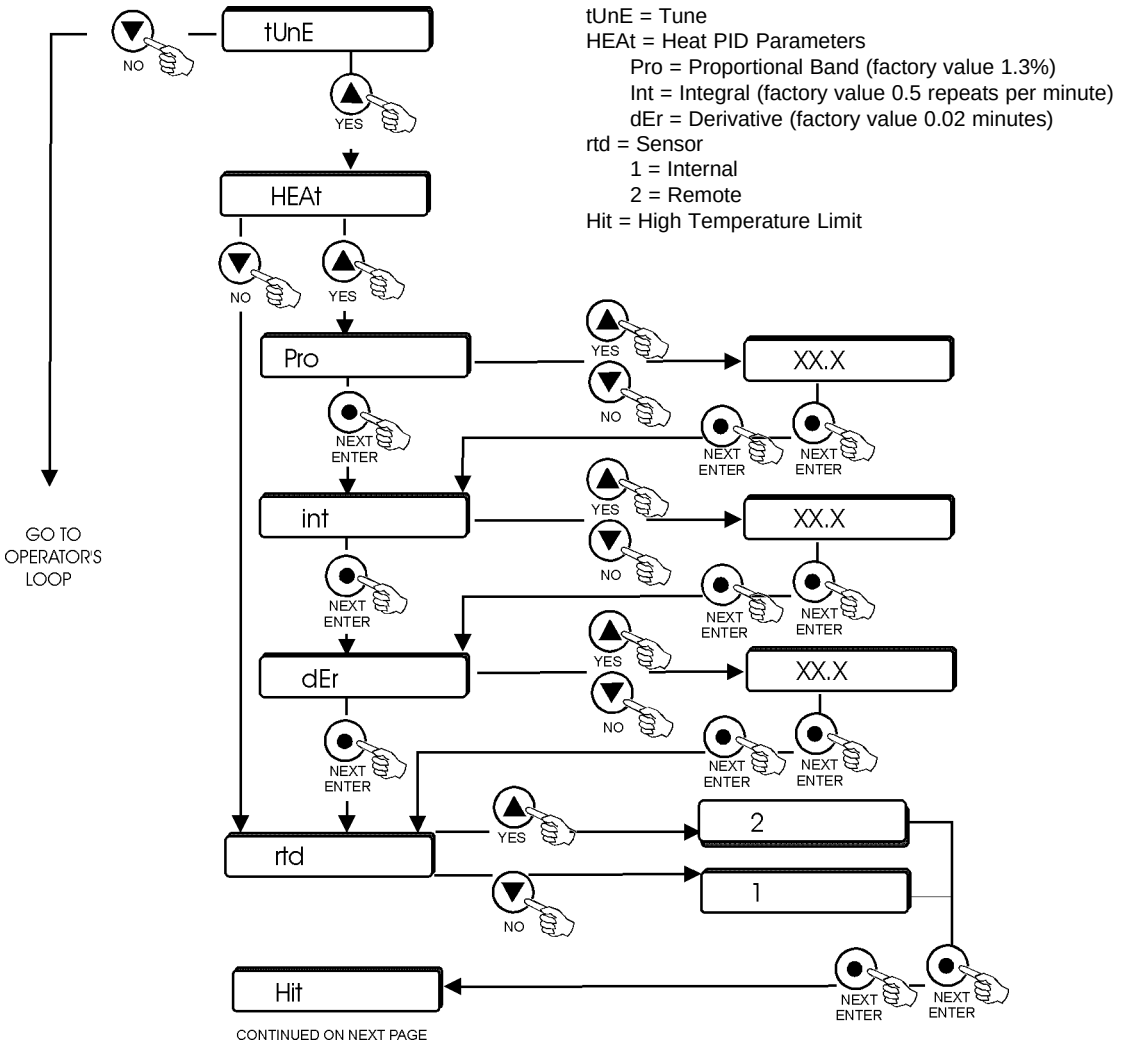

Figure 2 Setup Loop (1 of 2)

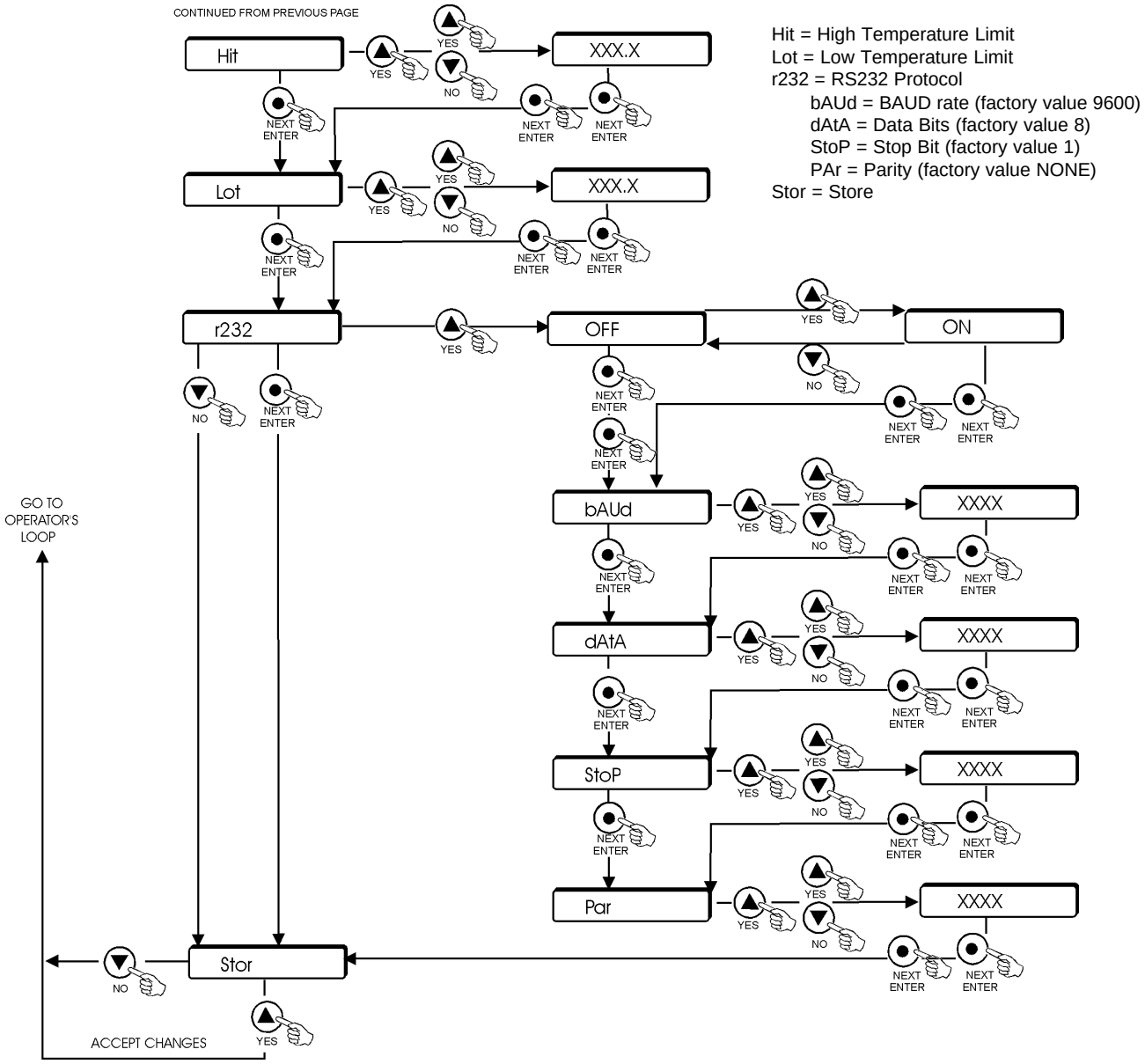

Figure 2 Setup Loop (2 of 2)

Error Messages

Error	Action
Er00:	ROM Checksum
Er01:	RAM Test Failed
Er03	Keypad Test Failed
Er04-13:	Interrupt Error
Er14:	Synchronous Error
Er15:	Asychronous Error
Er16:	Bad Calibration
Er19:	Low Temp Limit
Er21:	High Temp Limit
Er23:	RTD2 Shorted
Er24:	RTD2 Open/Not Installed
Er25:	RTD1 Shorted
Er26:	RTD1 Open
Er34:	High Temperature Cutout

NOTE: Errors 1 through 16 will lockup the controller keypad.

Autorefill (Optional)

An optional autorefill device is designed to maintain the correct level of cooling fluid in the reservoir. The device consists of a float switch and a solenoid valve. If the cooling fluid level falls, the float switch will open the solenoid valve and allow make-up fluid to fill the reservoir. Once the cooling level reaches the proper level, the float switch will rise and the solenoid valve will close.

The plumbing connection for the autorefill device, labeled WATER INLET, is located on the rear of the autorefill assembly. The connection is 3/8 inch OD stainless steel. Remove the nut and install the tubing from your make-up fluid source. Reinstall the nut and tubing on to the connection.

Tubing is available from NESLAB. Contact our Sales Department for more information (see Preface, After-sale Support).

The autorefill device requires its own source of electrical power. The connector for the line cord (provided with the assembly) is also located on the rear of the autorefill device. The connector is labelled POWER.

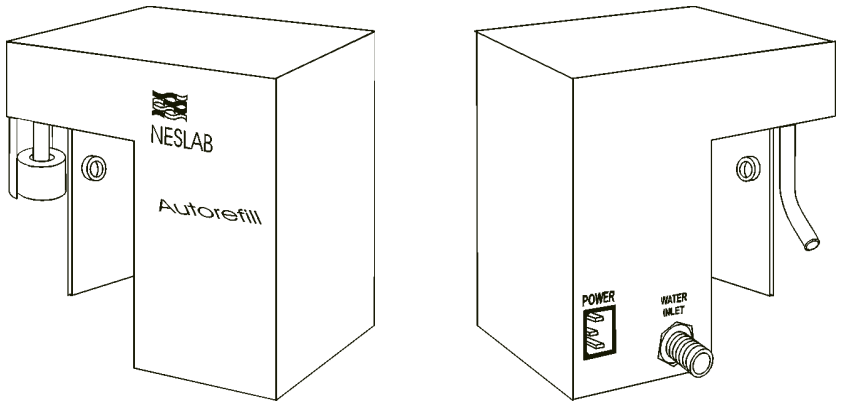

Autorefill Device

High Temperature/ Low Liquid Level Safety

To protect your application, the adjustable High Temperature/Low Liquid Level Safety (HIGH TEMP/LOW LEVEL) ensures the heater will not exceed temperatures which can cause serious damage to your unit. A single temperature sensor, located on the heater coils in the bath, monitors both conditions. A High Temperature/Low Liquid Level fault occurs when the temperature of the sensor exceeds the set temperature limit.

In the event of a fault, the unit will shut down. The cause of the fault must be identified and corrected before the unit can be restarted.

The safety is not preset and must be adjusted during initial installation.

To set the safety, locate the HIGH TEMP/LOW LEVEL SAFETY adjustment dial on the right side of the pump box. Turn the dial fully clockwise and press the red RESET switch located next to the adjustment dial. **NOTE:** On units without a reset switch turn the I/O switch off then back on.

Start the unit. Adjust the setpoint for a few degrees higher than the highest desired fluid temperature and allow the bath to stabilize at the temperature setpoint. Turn the HIGH TEMP/LOW LEVEL SAFETY dial counter-clockwise until you hear a click and the unit shuts down. The yellow FAULT LED on the temperature controller will light to indicate a fault has occurred.

Cool the bath and then, without moving the adjustment dial, press the red RESET switch or turn the I/O switch off then back on.

NOTE: The safety switch has a temperature range of 50°C to 180°C. The minimum high temperature safety setting is 50°C.

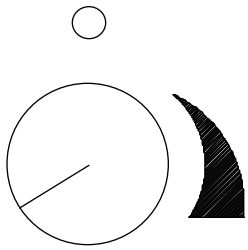

High Temperature/Low Liquid Level Safety
(Some units do not have a reset switch.)

9-Pin Accessory Connector

The unit is equipped with two female 9-pin D-connectors located on the rear of the control box. One is used for RS232 communication, the other is used with an optional remote sensor.



RS232 Pin Connections

Pin #	Function
1	No connection.
2	TX = Transmitted data
3	RX = Received data
4	No connection
5	GND = Signal ground
6	No connection.
7	CTS = Clear to send
8	RTS = Request to send
9	No connection

Hardware	Internal Connector	Mating Connector
	AMP Part# 745491-2	**AMP Part# 745492-2**

Remote Sensor Connections

Pin #	Function
1	3-wire RTD connection A
2	No connection
3	No connection
4	3-wire RTD connection B
5	No connection
6	No connection.
7	No connection
8	No connection
9	3-wire RTD connection C

Hardware	Internal Connector	Mating Connector
	AMP Part# 745491-2	**AMP Part# 745492-2**

Section V Maintenance



To avoid electrical shock, disconnect the mains cord prior to removing any access panels or covers.

Service Contracts

NESLAB offers on-site Service Contracts that are designed to provide extended life and minimal down-time for your unit. For more information, contact our Service Department (see Preface, After-sale Support).

Condenser

For proper operation, the unit needs to pull substantial amounts of air through a condenser. A build up of dust or debris on the fins of the condenser will lead to a loss of cooling capacity.

Periodic vacuuming of the condenser is necessary. To access the condenser the front grille must be removed.



The unit must be turned off before the front panel is removed.

RTE-111 units have a one-piece grille assembly. Pull forward to remove.

RTE-211 and RTE-221 units have a two piece grille assembly. First remove the left (blue-colored) section by simply pulling it forward. Pull forward on the remaining (white-colored) section to remove it.

The frequency of cleaning depends on the operating environment. After initial installation, we recommend a monthly visual inspection of the condenser. After several months, the frequency of cleaning will be established.

Reservoir Cleaning

Routine cleaning can be achieved by simply sponging down the seamless stainless steel tank with tap water. (Dish washing detergent may be used but the tank must be thoroughly rinsed.)

To gain access to the entire reservoir the pump box and reservoir cover should be removed.

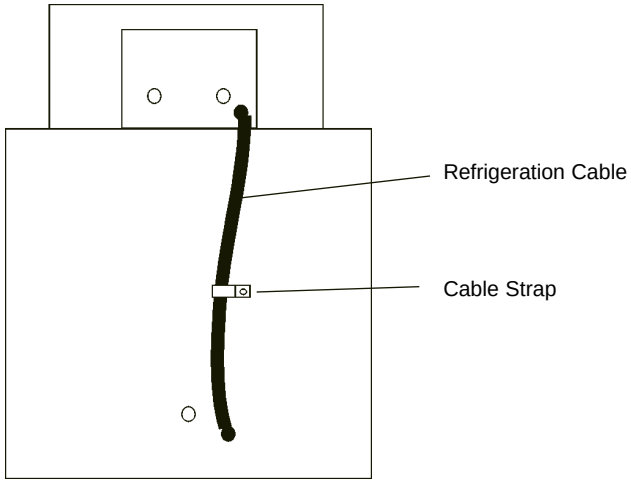

Remove the line cord from the rear of the unit and then remove the four screws (two on each side) securing the reservoir's cover.

To get slack on the refrigeration cable, remove the cable strap. The cable itself does not need to be disconnected.

Turn the cover assembly over and carefully place it on a supporting platform.

Algae

To restrict the growth of algae in the bath, we recommend the bath cover be kept in place and that all circulation lines be opaque. This will eliminate the entrance of light required for the growth of most common algae.

NESLAB recommends the use of Chloramine-T, 1 gram per 3½ liters.

Additional Loops

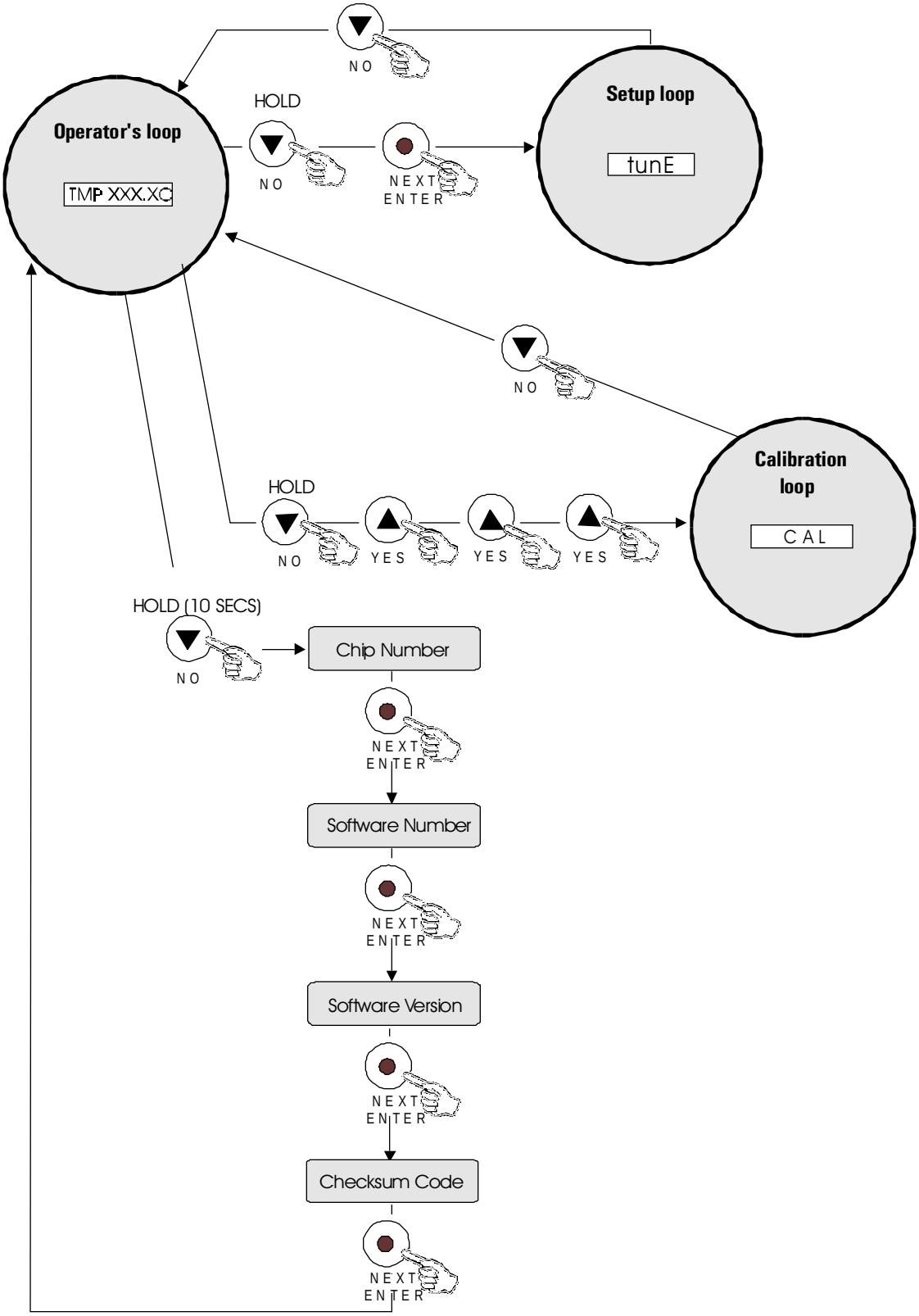

Figure 3 Changing Loops

Calibration Loop

The Calibration Loop is used to calibrate the RTD high and low temperature. The controller's internal temperature sensor is factory calibrated. We recommend calibrating any remote sensor.

Enter the Calibration Loop from the Operator's Loop by pressing and holding the NO key while pressing the YES key three times.

NOTE: Depressing the NEXT ENTER key when the controller displays rtd1 will change the display to rtd2. The menus for rtd2 are identical to the rtd1 menus.

Calibration Procedure

Install a calibrated reference thermometer in the bath. (For remote mode, also install the sensor in the bath.) Place the cover on the unit.

The procedure involves using the Operator's, Setup and Calibration Loops. Go to the Setup Loop and place the unit in the internal or remote RTD mode of operation (RTD1 = Internal Probe, RTD2 = Remote Probe). Return to the Operator's Loop adjust the setpoint to an appropriate high-end temperature.

Once the bath reaches the setpoint and stabilizes, go to the Calibration Loop and, as illustrated on the next page, enter the actual reference thermometer reading at the r1H or r2H prompt.

Save the change and return to the Operator's Loop. Adjust the setpoint to an appropriate low-end temperature. Once the bath reaches the setpoint and stabilizes, return to the Calibration Loop and enter the reference thermometer reading at the r1L or r2L prompt. Save the change.



Do not pick points that are outside the safe operating limits of the fluid in your application. For example with a water bath, 90°C and 5°C would be typical calibration points.

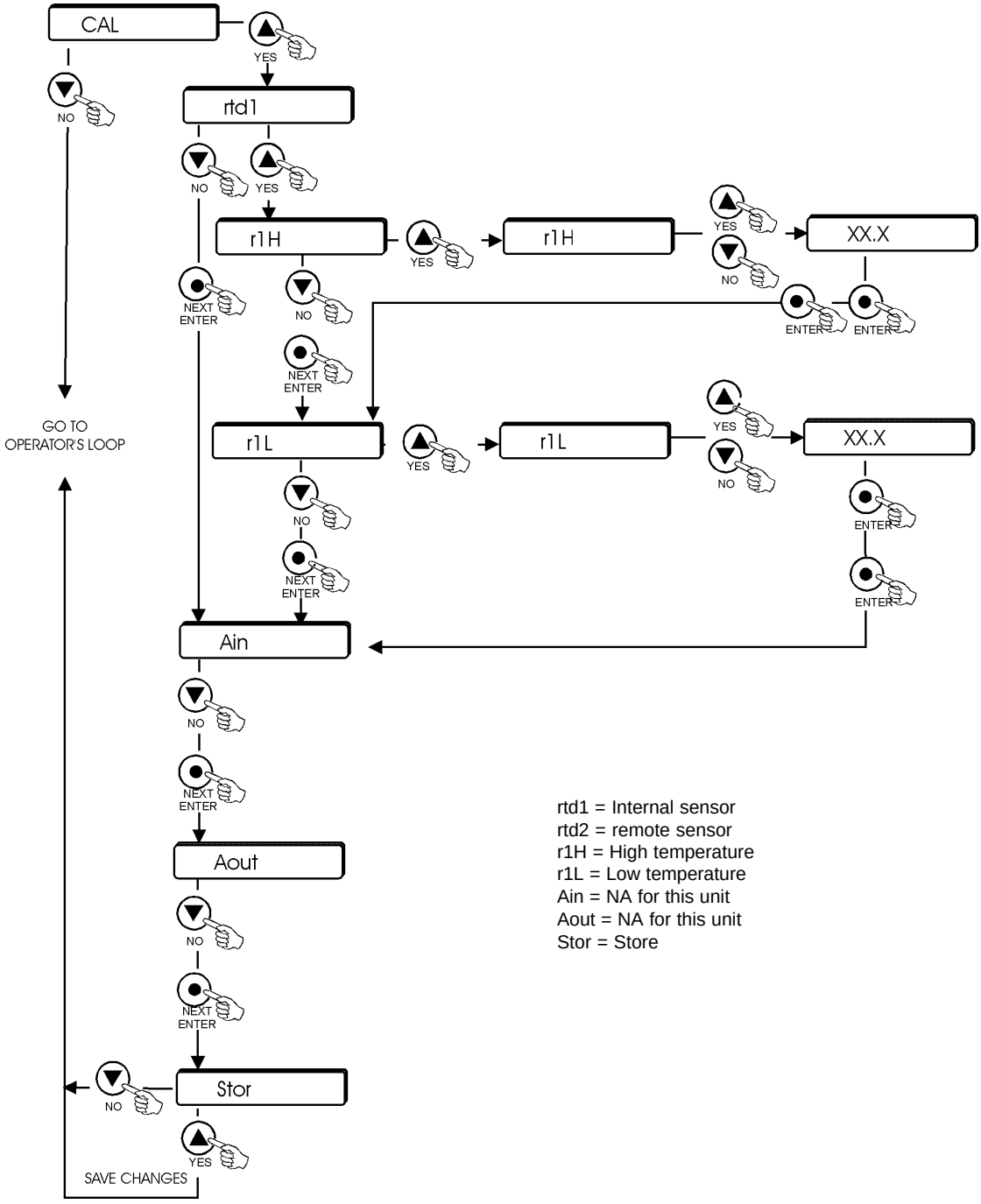

Figure 4 Calibration Loop

Section VI Troubleshooting

Checklist

Unit will not start

Make sure the voltage of the power source meets the specified voltage, ±10%. Refer to the serial number label on the rear of the unit to identify the specific electrical requirements of your unit.

Check the High Temperature/Low Liquid Level Safety. If the FAULT light is on, make sure the fluid level in the bath is between the marks in the baffle and the HIGH TEMP/LOW LEVEL SAFETY setting is greater than the fluid temperature. Push the RESET switch, or, for units without reset switches, turn the I/O switch off then back on, and attempt to restart.

Loss of cooling capacity

Be sure the cooling capacity of the unit has not been exceeded if circulating to an external system.

When the unit is shut off, wait approximately five minutes before restarting. This allows time for the refrigeration pressures to equalize. If the pressures are not allowed to equalize, the compressor will short-cycle (clicking sound) and no cooling will occur.

Proper ventilation is required for heat removal. Make sure ventilation through the front and rear panels is not impeded and the panels are free of dust and debris.

Ice build up on the cooling coils can act as insulation and lower the cooling capacity. Raise the temperature of the bath to de-ice the cooling coil and increase the concentration of non-freezing fluid.

No external circulation

Check for obstructions, kinks, or leaks in the circulation tubing.

Circulation will cease when the pump head has been exceeded.

No/poor temperature control

Check RS232/remote operation on or off.

Check remote sensor connection. Perform calibration.

Service Assistance and Technical Support

If, after following these troubleshooting steps, your unit fails to operate properly, contact our Customer Service Department for assistance (see Preface, After-sale Support). In addition to arranging warranty service, our Service Department can provide you with a wiring diagram and a complete list of spare parts for your unit. Before calling, please obtain the following:

Part number

Serial number

Section VII Programming Software

NEScom Software/ RS232 Communication

The NESLAB Communications Software is a user friendly software that allows you to automate your temperature control process. The software includes a 3½" disk, Comprehensive Operator's Manual and a toll-free number to a trained technical staff.

NEScom Software allows you to write custom temperature programs for our Digital or Microprocessor based temperature control apparatus. Choose upper or lower temperature limits and monitor system status with an alarm. NEScom can also record your results on a user selectable graph. NesCom must be used with an IBM or 100% compatible computer.

Select from easy to use product icons.

Create graphs and charts.

Easily configure ramping functions which set the setpoint over time.

View pop-up alarm windows which display if an alarm condition occurred.

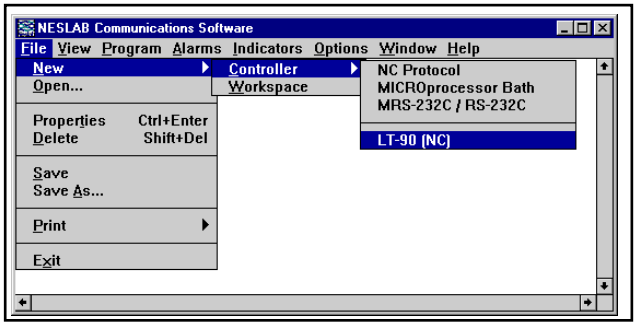

Select software functions from the easy to use pulldown menus.



View a virtual controller screen which allows remote monitoring and operation of product control panel.

MANTENIMIENTO PERIODICO

Inspeccione periódicamente el fluido del reservorio. Si es necesaria una limpieza, rocíe el reservorio con un fluido de limpieza compatible con el sistema de circulación y el fluido refrigerante.

Antes de cambiar el fluido refrigerante, suba la temperatura de operación de la unidad para descongelar los serpentines de refrigeración.

Es necesario un vaciado periódico de las aletas del condensador. La frecuencia de limpieza depende del entorno en que funciona el aparato. Recomendamos una inspección visual mensual del condensador después de la instalación inicial. Después de varios meses, quedará establecida la frecuencia de limpieza.

RTE Series
Analog/Digital

Thermo NESLAB Manual P/N 000258
Rev. 11/08/00

Instruction and Operation Manual

RTE-Series Refrigerated Bath/Circulator Instruction and Operation Manual

Table of Contents

PREFACE

Compliance 2
Unpacking 2
Warranty 2
NES-care 2
After-sale Support 2

SECTION I Safety

Warnings 3

SECTION II General Information

Description 4
Specifications 4

SECTION III Installation

Site 5
Electrical Requirements 5
Plumbing Requirements 6
Fluids 8
Filling Requirements 8

SECTION IV Controllers

Controllers 9
Start Up 9
RTE-221 Boost Heater 11
Autorefill (Optional) 11
High Temperature/Low Liquid Level Safety 12
15-Pin Accessory Connector 13

SECTION V Maintenance

Service Contracts 14
Condenser 14
Reservoir Cleaning 15
Algae 15

SECTION VI Troubleshooting

Checklist 16
Service Assistance and Technical Support 16

APPENDIX A International Quick Reference Guides

APPENDIX B Programming Software

WARRANTY

Preface

Compliance

Products tested and found to be in compliance with the requirements defined in the EMC standards defined by 89/336/EEC as well as Low Voltage Directive (LVD) 73/23/EEC can be identified by the CE label on the rear of the unit. The testing has demonstrated compliance with the following directives:

LVD, 73/23/EEC	Complies with UL 3101-1:93
EMC, 89/336/EEC	EN 55011, Class A Verification EN 50082-1:1992 IEC 1000-4-2:1995 IEC 1000-4-3:1994 IEC 1000-4-4:1995

For any additional information refer to the Letter of Compliance that shipped with the unit (Declaration of Conformity).

Unpacking

Retain all cartons and packing material until the unit is operated and found to be in good condition. If the unit shows external or internal damage, or does not operate properly, contact the transportation company and file a damage claim. Under ICC regulations, this is your responsibility.

Warranty

Units have a warranty against defective parts and workmanship for one year from date of shipment. See back page for more details.

NES-care Extended Warranty Contract

- Extend parts and labor coverage for an additional year.
- Worry-free operation.
- Control service costs.
- Eliminate the need to generate repair orders.
- No unexpected repair costs.

Other contract options are available. Please contact Thermo NESLAB for more information.

After-sale Support

Thermo NESLAB is committed to customer service both during and after the sale. If you have questions concerning the operation of your unit, contact our Sales Department. If your unit fails to operate properly, or if you have questions concerning spare parts or Service Contracts, contact our Customer Service Department. Before calling, please obtain the following information from the unit's serial number label:

- *BOM number* _____
- *Serial number* _____

Section I Safety

Warnings

Make sure you read and understand all instructions and safety precautions listed in this manual before installing or operating your unit. If you have any questions concerning the operation of your unit or the information in this manual, contact our Sales Department.

Performance of installation, operation, or maintenance procedures other than those described in this manual may result in a hazardous situation and may void the manufacturer's warranty.

Transport the unit with care. Sudden jolts or drops can damage the refrigeration lines. The units weigh approximately: RTE-111, 86 pounds (390 kilograms); RTE-211, 99 pounds (45 kilograms); RTE-221, 106 pounds (48 kilograms). Units should be transported with equipment designed to lift these weights.

Observe all warning labels.

Never remove warning labels.

Never operate damaged or leaking equipment.

Never operate the unit without bath fluid in the bath.

Never use pure ethylene glycol as a bath fluid. A minimum 80/20 mixture of Ethylene Glycol and tap water is allowed.

For 220 - 240 volt units supplied without a line cord, use a harmonized (HAR) grounded 3-conductor cord, type H 0 5 V V - F , with conductors listed below. A suitable cord end is required for connecting to the equipment (see unit socket) and must terminate with an IEC approved plug for proper connection to power supply.

NON-BOOST HEATER UNITS	**Nominal 1.0 mm² cross section rated 10 Amps Unit Socket: IEC - 320 C13**
BOOST HEATER UNITS	**Nominal 1.5 mm² cross section rated 16 Amps Unit Socket: IEC - 320 C19**

Always turn off the unit and disconnect the line cord from the power source before performing any service or maintenance procedures, or before moving the unit.

Always empty the bath before moving the unit.

Never operate equipment with damaged line cords.

Refer service and repairs to a qualified technician.

In addition to the safety warnings listed above, warnings are posted throughout the manual. These warnings are designated by an exclamation mark inside an equilateral triangle with text highlighted in bold print. Read and follow these important instructions. Failure to observe these instructions can result in permanent damage to the unit, significant property damage, personal injury or death.

Section II General Information

Description

The RTE-Series Refrigerated Bath/Circulators are designed to provide temperature control for applications requiring a fluid work area or pumping to an external system.

Units consists of a non-CFC air-cooled refrigeration system, circulation pump, seamless stainless steel bath, work area cover, and a temperature controller.

Specifications

	RTE-111	RTE-211	RTE-221
Temperature Range[1] *Analog controller* *Digital controller*	-25°C to +100°C -25°C to +150°C		-23°C to +100°C -23°C to +150°C
Temperature Stability[2,3,4] *Analog controller* *Digital controller*	±0.1°C ±0.01°C		
Cooling Capacity[2,5] *Watts* *BTU/H*	500 1705		
Pump Capacity	15 lpm at 0' (0 M) 0 lpm at 16' (4.9 M)		
Heater (Watts) *60 Hz Models* *50 Hz Models*	800 1000	800 1000	800/800 boost 1000/800 boost
Bath Work Area *(L x W x D)* *Inches* *Centimeters*	4 3/4 x 8 x 6 12.1 x 20.3 x 15.3	9 1/4 x 10 x 6 23.5 x 25.4 x 15.2	9 1/4 x 10 x 9 23.5 x 25.4 x 22.9
Bath Volume *Liters*	7.0	12.25	20.5
Case Dimensions *(H x W x D)* *Inches* *Centimeters*	25 x 10 5/16 x 15 7/8 63.5 x 26.2 x 40.3	25 x 12 3/8 x 18 3/8 63.5 x 31.4 x 46.7	27 7/8 x 12 3/8 x 18 3/8 70.8 x 31.4 x 46.7
Power Requirements[6]	115 V, 60 Hz, 12 Amp 220/240 V, 50 Hz, 7.5 Amp	115 V, 60 Hz, 12 Amp 220/240 V, 50 Hz, 7.5 Amp	115 V, 60 Hz, 16 Amp 220/240 V, 50 Hz, 10 Amp

1. Low end temperature for analog and digital 50Hz units is -18°C, -23°C and -21°C respectively.
2. Specifications listed for units operating at +20°C bath temperature, +20°C (+70°F) ambient, with tap water as bath fluid.
3. For operation below 0°C, covering the bath work area may improve stability.
4. For some applications, agitation and stability above ambient may be may be improved by connecting a small length of hose between the pump connections on the rear of the unit.
5. 50 Hz RTE-111 units have a 375 watt cooling capacity.
6. Power Board Transformer Fuse–Analog T 0.5A 250V (Qty 1), Digital T 0.8A 250V (Qty 2) [T=Time Delay]

Section III Installation

Site

The indentations on the unit's sides are designed to function as handles. Lift the unit by the handles and locate it on a sturdy work area. Ambient temperatures should be inside the range of +50°F to +80°F (+10°C to +27°C).



Never place the unit in a location where excessive heat, moisture, or corrosive materials are present.

The unit has an air-cooled refrigeration system. Air is drawn through the front panel and discharged through the rear panel. The unit must be positioned so the air intake and discharge are not impeded. A minimum clearance of 12 inches (30 centimeters) at the front and rear of the unit is necessary for adequate ventilation. Inadequate ventilation will reduce cooling capacity and, in extreme cases, can cause compressor failure.

Excessively dusty areas should be avoided and a periodic cleaning schedule should be instituted (see Section VI, Cleaning).

The unit will retain its full rated capacity in ambient temperatures up to approximately +75°F (+24°C). Above +75°F, reduce the cooling capacity 1% for every 1°F above +75°F, to a maximum ambient temperature of +95°F. In terms of Celsius, reduce the cooling capacity 1% for every 0.5°C above +24°C, to a maximum ambient temperature of +35°C.

Electrical Requirements



Line voltage may be easily accessible inside the pump/control box. Always unplug the unit prior to removing pump/control box cover.

Refer to the serial number label on the rear of the unit to identify the specific electrical requirements of your unit.

Ensure the voltage of the power source meets the specified voltage, ±10%.

The unit construction provides extra protection against the risk of electric shock by grounding appropriate metal parts. The extra protection may not function unless the power cord is connected to a properly grounded outlet. It is the user's responsibility to assure a proper ground connection is provided.



For 220 - 240 volt units supplied without a line cord, use a harmonized (HAR) grounded 3-conductor cord, type H 0 5 V V - F , with conductors listed below. A suitable cord end is required for connecting to the equipment (see unit socket) and must terminate with an IEC approved plug for proper connection to power supply.

BOOST HEATER UNITS	**Nominal 1.5 mm² cross section rated 16 Amps**
	Unit Socket: IEC - 320 C19
NON-BOOST HEATER UNITS	**Nominal 1.0 mm² cross section rated 10 Amps**
	Unit Socket: IEC - 320 C13

Plumbing Requirements



Ensure the unit is off before connecting tubing to the unit.

Hose Connections

The pump connections are located at the rear of the pump box and are labelled PUMP INLET and PUMP OUTLET. These connections are bent upward so the recirculating fluid will drain back into the reservoir when the hoses are disconnected. Both connections are capped with stainless steel serrated plugs.

The pump lines have ¼ inch male pipe threads for mating with standard plumbing fittings. For your convenience stainless steel adapters, ¼ inch female pipe thread to $^{3}/_{8}$ inch O.D. serrated fitting, are provided. (To assure proper fit, they should be installed using Teflon® tape around the threads.)

Flexible tubing, if used, should be of heavy wall or reinforced construction. Make sure all tubing connections are securely clamped. Avoid running tubing near radiators, hot water pipes, etc. If substantial lengths of tubing are necessary, insulation may be required to prevent loss of cooling capacity.

Tubing and insulation are available from Thermo NESLAB. Contact our Sales Department for more information (see Preface, After-sale Support).

It is important to keep the distance between the unit and the external system as short as possible, and to use the largest diameter tubing practical. Tubing should be straight and without bends. If diameter reductions must be made, make them at the inlet and outlet of the external system, not at the unit.

If substantial lengths of cooling lines are required, they should be pre-filled with bath fluid before connecting them to the unit. This will ensure that an adequate amount of fluid will be in the bath once it is in operation.

Pumping

The pump is designed to deliver a flow of 15 liters per minute (4 gallons per minute) at 0 feet head. To prevent external circulation, the PUMP INLET and PUMP OUTLET lines on the rear of the unit are capped. The caps must be removed when external circulation is required.

To properly secure external hose connections to the unit, wrap Teflon® tape around the pipe line threads before installation. Once the hose connections are made, the hoses must be properly plumbed to an external system. *It is important the bath is not in operation until all plumbing is complete.*

NOTE: To increase agitation in the bath when not circulating externally, connect a short loop of hose between the inlet and outlet lines.

If the bath is not used for external circulation or incresed agitation, make sure the stainless steel caps are in place prior to operating the bath.

Circulating to an open container

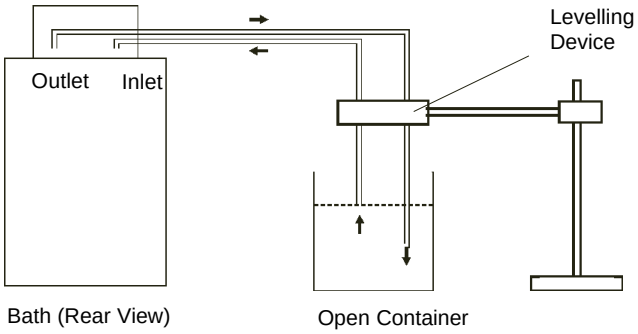

A stainless steel leveling device is available to aid circulation to an open vessel. Contact our Sales Department for more information (see Preface, After-sale Support).

Support the leveling device over the open container with a ringstand. Stagger the tubes in the leveling device so one tube is submerged in the vessel fluid, and the other tube is level with the fluid surface. Connect the deeper tube to the PUMP OUTLET and the shorter tube to the PUMP INLET.

Adjust the flow rate using the accessory flow control valve connected to the PUMP OUTLET, or by partially restricting the outlet tubing. When properly adjusted, the pump inlet will draw an occasional air bubble to prevent over flow, and the pump outlet will force fluid through the submerged tube to prevent aeration of the vessel.

To avoid siphoning the bath work area when the unit is shut off, lift the leveling device out of the vessel and above the level of the unit.

Circulating through two closed loops

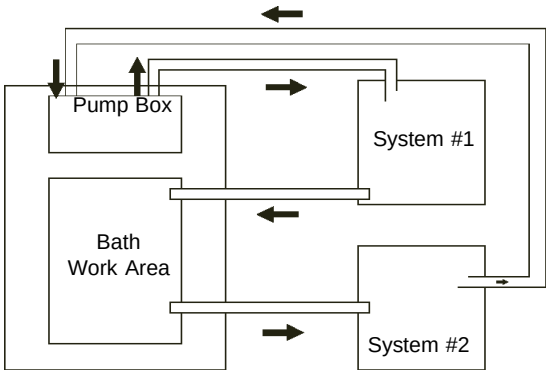

Bath (Top View)

The pump can be used to circulate through two closed loop systems. Connect the shortest practical length of flexible tubing from the PUMP OUTLET to the inlet of external system #1. Connect the outlet of system #1 directly into the bath work area. Connect tubing from the bath work area to the inlet of system #2. Connect the outlet of system #2 to the PUMP INLET.

Drain



Ensure the temperature of the bath fluid is safe before draining the unit.

The unit is equipped with a drain located at the back of the unit at the base of the bath. The drain has ¼ inch male pipe threads and is capped with a stainless steel plug. To drain the reservoir simply remove the cap.

To assure proper fit when replacing the cap, be sure to line the threads with Teflon® tape.

Fluids



Never use flammable or corrosive fluids with this unit.

The selected fluid must have a viscosity of 50 centistokes or less at the lowest operating temperature.

Tap water is the recommended fluid for operation from +8°C to +80°C.

For operation from +8°C to -30°C, a 50/50 mixture, by volume, of tap water and laboratory grade ethylene glycol is suggested.

Above +80°C and below -30°C, the user is responsible for fluids used.



Never use pure ethylene glycol as a bath fluid. A minimum 80/20 mixture of Ethylene Glycol and tap water is allowed.

Filling Requirements

The bath work area has a high and low level marker to guide filling. The markers are 1 inch horizontal slits located in the center of the stainless steel baffle separating the work area and the pump assembly. The correct fluid level falls between these two markers. The heating and cooling coils will be exposed and may become damaged if the correct fluid level is not provided.

When pumping to an external system, keep extra fluid on hand to maintain the proper level in both the circulating lines and the external system.



Never run the unit when the work area is empty. Never overfill the unit, this may damage the insulation and affect stability.

Section IV Controllers

Controllers

Two standard temperature controllers are available with the unit: Analog and Digital. This section explains the installation and operation of the controllers.

Start Up

Before starting the unit, check all electrical and plumbing connections and make sure the work area has been properly filled with bath fluid.

To start 115V units press the I/O switch on the side of the controller to the **I** (power on) position. The pump will start and the POWER LED will light.

220V units have a circuit breaker instead of a switch. The circuit breaker is labeled **I** (power on) and **O** (power off). Ensure the circuit breaker is in the **I** position.

Two switches operate the REFRIGERATION system: ON/OFF and MIN/MAX. The REFRIGERATION switch should be ON for normal operation below 50°C. Above 50°C turn the REFRIGERATION switch ON only if you need a rapid cool-down.

We recommend you use MAX for operation between 0°C and 30°C.

MIN is for normal operation below 0°C and for maintaining temperature consistency in applications with low heat loads. MIN must be used for operation above 30°C.

The HEAT LED indicates the status of the heater. As the temperature of the fluid in the bath approaches the temperature setpoint, the lamp will cycle on and off to indicate the approximate duty cycle of the heater.

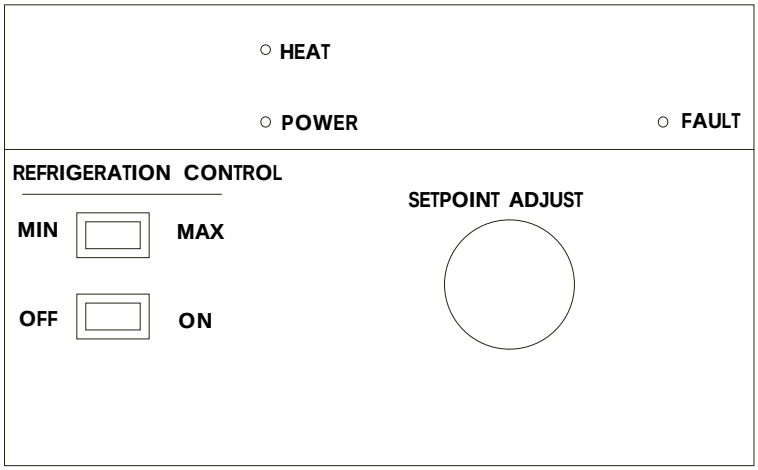

Analog Controller

Analog Temperature Adjustment

Units with Analog temperature controller are equipped with a glass tube thermometer. Insert the thermometer in the grommet located on the left side of the work area.

To adjust the bath temperature, turn the dial to the desired setpoint. Use the bath thermometer to make fine adjustments to the bath temperature.

When the unit is shut off wait approximately five minutes before restarting. This allows time for the refrigeration pressures to equalize. If the pressures are not allowed to equalize, the compressor will short-cycle (clicking sound) and no cooling will occur.

Digital Temperature Adjustment

To display the temperature setpoint, press the DISPLAY switch. To adjust the setpoint, press and hold the DISPLAY switch and turn the COARSE and FINE dials until the temperature setpoint is indicated on the LED display.

NOTE: Inadvertent movement of the COARSE and FINE dials, regardless of the position of the DISPLAY switch, will result in a change of the setpoint. The change will not be immediately reflected on the LED display unless the DISPLAY switch is pressed. The display will eventually change as the unit responds to the new setpoint.

When the unit is shut off wait approximately five minutes before restarting. This allows time for the refrigeration pressures to equalize. If the pressures are not allowed to equalize, the compressor will short-cycle (clicking sound) and no cooling will occur.

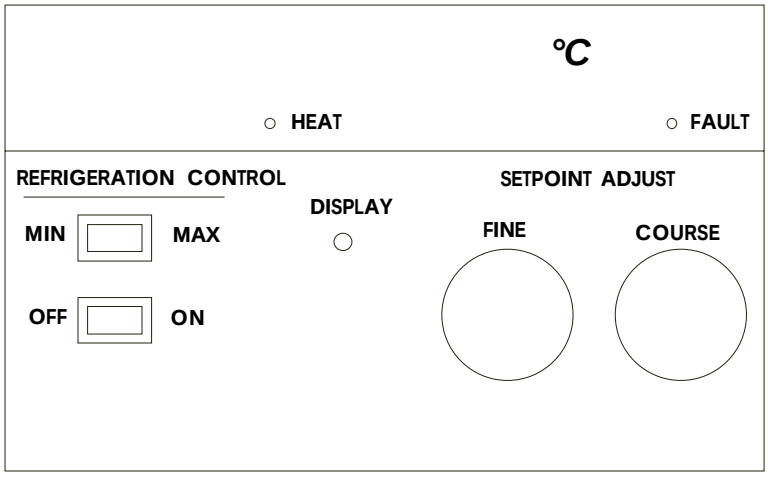

Digital Controller

RTE-221 Boost Heater

All RTE-221 models have a boost heater. The boost heater is designed to provide additional heat to the unit's large work area to aid rapid heating.

To start the heater place the BOOST HEAT switch, located on the front of the temperature controller, to the ON position. Even though the switch automatically returns to the OFF position, the boost heater will start to function. (You can verify this by observing the fluid temperature rising.) The boost heater automatically ceases operation when the setpoint is reached.

If the REFRIGERATION switch is ON, placing the BOOST HEAT switch to ON automatically turns the refrigeration system off. The refrigeration system will restart once the boost heater turns off. Therefore, if you do not require the refrigeration system, the REFRIGERATION switch should be placed to OFF before turning the boost heater on.

Autorefill (Optional)

An optional autorefill device is designed to maintain the correct level of cooling fluid in the reservoir. The device consists of a float switch and a solenoid valve. If the cooling fluid level falls, the float switch will open the solenoid valve and allow make-up fluid to fill the reservoir. Once the cooling level reaches the proper level, the float switch will rise and the solenoid valve will close.

The plumbing connection for the autorefill device, labeled WATER INLET, is located on the rear of the autorefill assembly. The connection is 3/8 inch OD stainless steel. Remove the nut and install the tubing from your make-up fluid source. Reinstall the nut and tubing on to the connection.

Tubing is available from Thermo NESLAB. Contact our Sales Department for more information (see Preface, After-sale Support).

The autorefill device requires its own source of electrical power. The connector for the line cord (provided with the assembly) is also located on the rear of the autorefill device. The connector is labelled POWER.

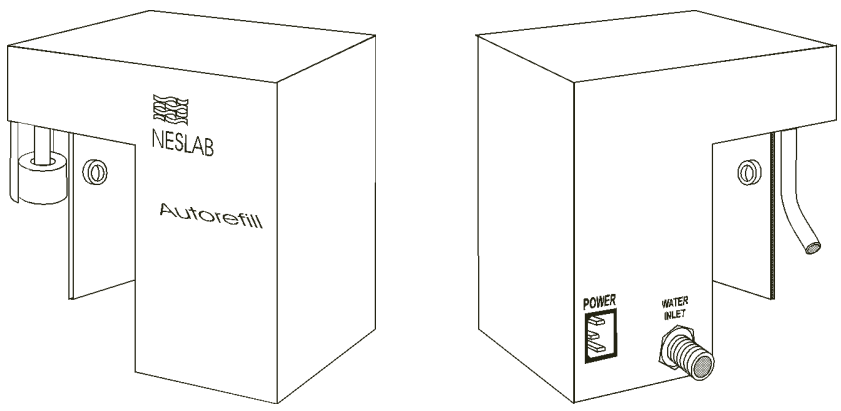

Autorefill Device

High Temperature/ Low Liquid Level Safety

To protect your application, the adjustable High Temperature/Low Liquid Level Safety (HIGH TEMP/LOW LEVEL) ensures the heater will not exceed temperatures which can cause serious damage to your unit. A single temperature sensor, located on the heater coils in the bath, monitors both conditions. A High Temperature/Low Liquid Level fault occurs when the temperature of the sensor exceeds the set temperature limit.

In the event of a fault, the unit will shut down. The cause of the fault must be identified and corrected before the unit can be restarted.

The safety on single heater systems is not preset and must be adjusted during initial installation.

Units with a boost heater have an additional nonadjustable safety located behind the main safety. It has a red reset button but no adjustment knob.

To set the safety, locate the HIGH TEMP/LOW LEVEL SAFETY adjustment dial on the right side of the pump box. Turn the dial fully clockwise and turn the I/O switch off then back on.

Start the unit. Adjust the setpoint for a few degrees higher than the highest desired fluid temperature and allow the bath to stabilize at the temperature setpoint. Turn the HIGH TEMP/LOW LEVEL SAFETY dial counter-clockwise until you hear a click and the unit shuts down. The red FAULT LED on the temperature controller will light to indicate a fault has occurred.

Cool the bath and then, without moving the adjustment dial, turn the I/O switch off then back on.

NOTE: The safety has a temperature range of 0°C to 180°C.

15-Pin Accessory Connector

Digital units are equipped with a 15 pin D-subminiature female receptacle on the right side of the power box. An ENABLE/DISABLE switch is located just below the receptacle. Place the switch to the ENABLE position to control the bath via the receptacle connection. (The sensor temperature and setpoint, pin 7 and 8, can be read with the switch in either position.) The pin-out information is listed below.

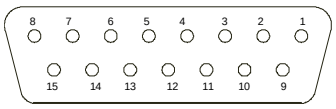

15 pin D-subminiature female receptacle

Pin #	Function
1	Chassis ground.
2	No connection.
3	Span +. Indicates the maximum setpoint value the unit can be set to operate. The temperature scale is 10mV/°C, referenced to analog ground, pin 6 (example: +350mV = +35.0°C).
4	Span -. Indicates the minimum setpoint value the unit can be set to operate. The temperature scale is 10mV/°C, referenced to analog ground, pin 6 (example: +50mV = +5.0°C).
5	No connection.
6	Analog ground. The analog ground is physically separated from the power ground throughout the unit. To prevent offsets that result from ground currents, the analog and power grounds are only connected at the unit's power supply. Analog ground should only be used as a reference pin.
7	Sensor temperature (current limited through 2.7K OHM resistor). The fluid temperature, as measured by the controller's sensor located in the reservoir, can be read at this pin. The temperature scale is 10mV/°C, referenced to analog ground, pin 6 (example: +150mV = +15.0°C).
8	Setpoint out. The present temperature setpoint can be read at this pin. The temperature scale is 10mV/°C, referenced to analog ground, pin 6 (example: +150mV = +15.0°C).
9	Power Ground.
10	No connection.
11	No connection.
12	Digital display (input only). An external voltage can be displayed on the operator panel digital display by applying the voltage to this pin. The display has a low input resistance and a full scale rating of ±1.99VDC. Input is referenced to analog ground, pin 6. The maximum voltage applied to the display should be limited to ±2VDC.
13	- 5V. Power supply of -5VDC (15mA maximum).
14	+5V. Power supply of +5VDC (50mA maximum).
15	Setpoint in. The temperature setpoint can be controlled by applying a known voltage to this pin. The temperature scale is 10mV/°C, referenced to analog ground, pin 6 (example: +230mV = +23.0°C).

NOTE: With the switch in the ENABLE position and no input to pin 15, the bath will slowly go to the setpoint value set on the digital controller.

Section V Maintenance



To avoid electrical shock, disconnect the mains cord prior to removing any access panels or covers.

Service Contracts

Thermo NESLAB offers on-site Service Contracts that are designed to provide extended life and minimal down-time for your unit. For more information, contact our Service Department (see Preface, After-sale Support).

Condenser

For proper operation, the unit needs to pull substantial amounts of air through a condenser. A build up of dust or debris on the fins of the condenser will lead to a loss of cooling capacity.

Periodic vacuuming of the condenser is necessary. To access the condenser the front grille must be removed.



The unit must be turned off before the front panel is removed.

RTE-111 units have a one-piece grille assembly. Pull forward to remove.

RTE-211 and RTE-221 units have a two piece grille assembly. First remove the left (blue-colored) section by simply pulling it forward. Pull forward on the remaining (white-colored) section to remove it.

The frequency of cleaning depends on the operating environment. After initial installation, we recommend a monthly visual inspection of the condenser. After several months, the frequency of cleaning will be established.

Reservoir Cleaning

Routine cleaning can be achieved by simply sponging down the seamless stainless steel tank with tap water. (Dish washing detergent may be used but the tank must be thoroughly rinsed.)

To gain access to the entire reservoir the pump box and reservoir cover should be removed.

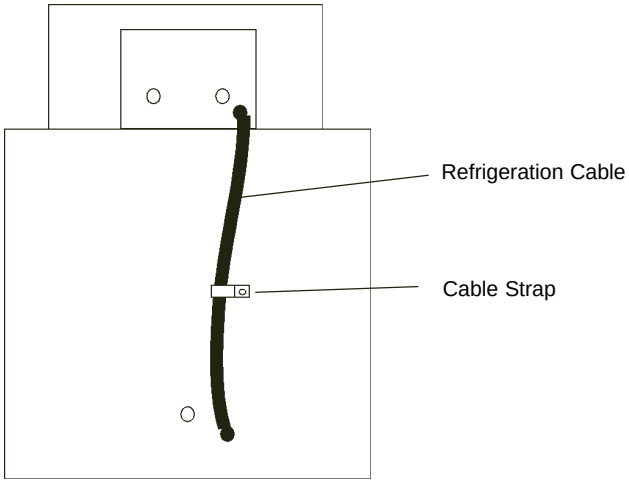

Remove the line cord from the rear of the unit and then remove the four screws (two on each side) securing the reservoir's cover.

To get slack on the refrigeration cable, remove the cable strap. The cable itself does not need to be disconnected.

Turn the cover assembly over and carefully place it on a supporting platform.

Algae

To restrict the growth of algae in the bath, we recommend the bath cover be kept in place and that all circulation lines be opaque. This will eliminate the entrance of light required for the growth of most common algae.

Thermo NESLAB recommends the use of Chloramine-T, 1 gram per 3.7 liters.

Section VI Troubleshooting

Checklist

Unit will not start

Make sure the voltage of the power source meets the specified voltage, ±10%. Refer to the serial number label on the rear of the unit to identify the specific electrical requirements of your unit.

Check the High Temperature/Low Liquid Level Safety. If the FAULT light is on, make sure the fluid level in the bath is between the marks in the baffle and the HIGH TEMP/LOW LEVEL SAFETY setting is greater than the fluid temperature. Turn the I/O switch off then back on, and attempt to restart.

Loss of cooling capacity

Check the position of the REFRIGERATION switch.

Be sure the cooling capacity of the unit has not been exceeded if circulating to an external system.

When the unit is shut off, wait approximately five minutes before restarting. This allows time for the refrigeration pressures to equalize. If the pressures are not allowed to equalize, the compressor will short-cycle (clicking sound) and no cooling will occur.

Proper ventilation is required for heat removal. Make sure ventilation through the front and rear panels is not impeded and the panels are free of dust and debris.

Ice build up on the cooling coils can act as insulation and lower the cooling capacity. Raise the temperature of the bath to de-ice the cooling coil and increase the concentration of non-freezing fluid.

No external circulation

Check for obstructions, kinks, or leaks in the circulation tubing.

Circulation will cease when the pump head has been exceeded.

Service Assistance and Technical Support

If, after following these troubleshooting steps, your unit fails to operate properly, contact our Customer Service Department for assistance (see Preface, After-sale Support). In addition to arranging warranty service, our Service Department can provide you with a wiring diagram and a complete list of spare parts for your unit. Before calling, please obtain the following:

Part number
Serial number
Voltage of unit
Voltage of power source

Appendix A International Quick Reference Guides

RTE - Serie Kurzbedienungsanleitung

Installation
Das Gerät verfügt über ein luftgekühltes Kühlsystem. Die Luft wird an der Vorderseite angesaugt und strömt an der Rückseite aus. Das Gerät muß so plaziert werden, daß der Luftstrom nicht behindert wird. Bei ungenügender Ventilation wird die Kühlleistung reduziert und kann in extremen Situationen zu einem Ausfall des Kühlsystems (Kompressors) führen.

Aufstellorte mit hoher Staubentwicklung sollten vermieden werden, und es sollte eine regelmäßige Reinigung des Gerätes durchgeführt werden. Um einwandfrei zu funktionieren, muß das Gerät große Luftmengen durch den Kondensor ansaugen. Bei Staub- und Schmutzablagerungen auf dem Kondensorheizkörper kommt es zu einem Verlust von Kühlleistung.

Das Gerät behält seine maximale Kühlleistung bis zu einer Umgebungstemperatur von ca. +24°C.

Vergewissern Sie sich, daß die Spannung Ihrer Stromanschlüsse mit der für das Gerät vorgesehenen Spannung übereinstimmt (± 10%).

Die Schlauchanschlüsse (1/4 Zoll MPT) des Gerätes befinden sich an der Rückseite und sind mit PUMP INLET und PUMP OUTLET bezeichnet. Entfernen Sie die Kappen, falls externe Zirkulation gewünscht wird. Schließen Sie den PUMP OUTLET-Anschluß an den Eingang Ihres Instruments und den PUMP INLET-Anschluß an den Ausgang Ihres Instruments an.

Füllen Sie das Reservoir bis zu einem Stand, der zwischen den horizontalen Markierungen liegt, die auf dem Blech markiert sind, das den Arbeitsbereich von der Pumpeneinheit trennt.

Verwenden Sie niemals entflammbare oder Korrosion verursachende Flüssigkeiten. Die gewählte Flüssigkeit muß eine Viskosität von maximal 50 Centistokes bei der niedrigsten möglichen Arbeitstemperatur haben. Für den Betrieb im Arbeits-Temperaturbereich von +8°C bis +80°C empfiehlt Thermo NESLAB Leitungswasser als Kühlmittel.

Wenn sie zu einem externen System zirkulieren, sollten Sie zusätzliche Kühlflüssigkeit zur Hand haben, um den Kühlflüssigkeitsstand in den Zirkulationsleitungen und dem externen System beibehalten zu können.

Betreiben Sie das Gerät niemals mit leerem Arbeitsbereich!

Inbetriebnahme
Vor Inbetriebnahme des Gerätes vergewissern Sie sich bitte, daß die elektrischen Anschlüsse und die Rohr- u. Schlauchanschlüsse sachgemäß installiert sind und daß das gesamte System mit Kühlflüssigkeit gefüllt ist.

Geräte, die bei 220 Volt betrieben werden, verfügen über einen Stromkreisunterbrecher auf der Rückseite des Gerätes. Vergewissern Sie sich, daß dieser auf ON gestellt ist. Um das Gerät einzuschalten, müssen Sie den I/O-Schalter auf „I“ stellen. Die Power-Lampe leuchtet auf, wenn das Gerät in Betrieb ist. Um das Gerät abzuschalten, muß der I/O-Schalter auf „O“ gestellt werden.

Bei Normalbetrieb unter +50 °C sollte der REFRIGERATION-Schalter auf ON gestellt werden. Die MIN-Einstellung ist für den Normalbetrieb bei unter 0 °C und bei +30 °C bis +50 °C. Verwenden Sie die MAX-Einstellung beim Betrieb bei 0 °C bis +30 °C.

Die HEAT-LED-Anzeige zeigt den Status des Heizelements an. Sie leuchtet auf, wenn das Heizelement arbeitet. Wenn die Arbeitstemperatur den gewünschten Setpoint erreicht, blinkt die LED-Anzeige, um den ungefähren Arbeitsrhythmus des Heizelements anzuzeigen.

Nach dem Ausschalten des Gerätes sollten Sie vor dem Wiedereinschalten ca. 5 Minuten warten, damit das Kühlsystem einen Druckausgleich durchführen kann. Beachtet man diese Wartezeit nicht, kommt es zu kurzen Schaltfrequenzen des Kompressors und eine Kühlung ist nicht möglich.

Einstellung der Analog-Temperatursteuerung
Um die Temperatur einzustellen (setpoint), drehen Sie den SETPOINT ADJUST-Schalter an der Vorderseite des Gerätes auf die gewünschte Temperatur.

Einstellung der Digital-Temperatursteuerung
Um sich den Temperatur-Setpoint anzeigen zu lassen, drücken Sie den DISPLAY-Schalter und halten Sie ihn gedrückt. Um den Temperatur-Setpoint einzustellen, drücken Sie den Display-Schalter, halten diesen, und drehen gleichzeitig den SETPOINT ADJUST-Schalter so lange, bis die gewünschte Temperatur in der Digitalanzeige angezeigt wird. Wenn die Temperatur eingestellt ist, lassen Sie den Display-Schalter los. Die Digitalanzeige zeigt dann die Temperatur der Kühlflüssigkeit im Reservoir an.

RTE Series
Refrigerated Bath/Circulators Digital Controller

Thermo NESLAB Manual P/N U00479
Rev. 12/12/00

Instruction and Operation Manual

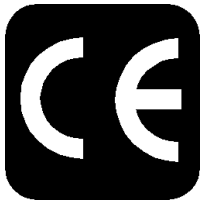

Table of Contents

PREFACE

Compliance 2
Unpacking 2
Warranty 2
NES-care 2
After-sale Support 2

SECTION I
Safety

Warnings 3

SECTION II
General Information

Description 4
Specifications 4

SECTION III
Installation

Site 5
Electrical Requirements 5
Plumbing Requirements 6
Fluids 8
Filling Requirements 8
Water Quality Standards and Recommendations 9

SECTION IV
Operation

Start Up 10
Controller Keypad & Display 10
Changing a Value 11
Controller Displays 11
Operator's Loop 12
Setup Loop 13
High Temperature/Low Liquid Level Safety 15
9-Pin Accessory Connectors 16
Analog Interface (Optional) 17
Autorefill (Optional) 18
Flow Control Valve (Optional) 19
Sealable Bath Lid (Optional) 19

SECTION V
Maintenance

Service Contracts 20
Reservoir Cleaning 20
Algae 20
Condenser 21
Error Messages 21
Additional Loops 22
Calibration Loop 23
Calibration Procedure 23

SECTION VI
Troubleshooting

Checklist 25
Service Assistance and Technical Support 26

APPENDIX A **THERMO NESLAB SERIAL COMMUNICATION PROTOCOL**

APPENDIX B **PROGRAMMING SOFTWARE/RS232 COMMUNICATION**

WARRANTY

Preface

Compliance

Products tested and found to be in compliance with the requirements defined in the EMC standards defined by 89/336/EEC as well as Low Voltage Directive (LVD) 73/23/EEC can be identified by the CE label on the rear of the unit. The testing has demonstrated compliance with the following directives:

LVD, 73/23/EEC	Complies with UL 3101-1:93
EMC, 89/336/EEC	EN 55011, Class A Verification EN 50082-1:1992 IEC 1000-4-2:1995 IEC 1000-4-3:1994 IEC 1000-4-4:1995

For any additional information refer to the Letter of Compliance that shipped with the unit (Declaration of Conformity).

Unpacking

Retain all cartons and packing material until the unit is operated and found to be in good condition. If the unit shows external or internal damage, or does not operate properly, contact the transportation company and file a damage claim. Under ICC regulations, this is your responsibility.

Warranty

Units have a warranty against defective parts and workmanship for one full year from date of shipment. See back page for more details.

NES-care Extended Warranty Contract

- Extend parts and labor coverage for an additional year.
- Worry-free operation.
- Control service costs.
- Eliminate the need to generate repair orders.
- No unexpected repair costs.

Other contract options are available. Please contact Thermo NESLAB for more information.

After-sale Support

Thermo NESLAB is committed to customer service both during and after the sale. If you have questions concerning the operation of your unit or the information in this manual, contact our Sales Department. If your unit fails to operate properly or if you have questions concerning spare parts or Service Contracts, contact our Service Department.

Before calling, please refer to the serial number label on the rear of the unit and page 22 to obtain the following information:

- BOM number _____

- Serial number _____

- Software version (see page 22) _____

Section I Safety

Warnings

Make sure you read and understand all instructions and safety precautions listed in this manual before installing or operating your unit. If you have any questions concerning the operation of your unit or the information in this manual, contact our Sales Department.

Performance of installation, operation, or maintenance procedures other than those described in this manual may result in a hazardous situation and may void the manufacturer's warranty.

Transport the unit with care. Sudden jolts or drops can damage the refrigeration lines. The units weigh approximately: RTE-111, 86 pounds (390 kilograms); RTE-211, 99 pounds (45 kilograms); RTE-221, 106 pounds (48 kilograms). Units should be transported with equipment designed to lift these weights.

Observe all warning labels.

Never remove warning labels.

Never operate damaged or leaking equipment.

Never operate the unit without bath fluid in the bath.

Never use pure ethylene glycol as a bath fluid. Above 80°C the user is responsible for the fluid used.

For 220 - 240 volt units supplied without a line cord, use a harmonized (HAR) grounded 3-conductor cord, type H05VV-F, with conductors listed below. A suitable cord end is required for connecting to the equipment (see unit socket) and must terminate with an IEC approved plug for proper connection to power supply.

RTE-111 and RTE-211	**Nominal 1.0 mm^2 cross section rated 10 Amps Unit Socket: IEC - 320 C13**
RTE-221	**Nominal 1.5 mm^2 cross section rated 16 Amps Unit Socket: IEC - 320 C19**

Always turn off the unit and disconnect the line cord from the power source before performing any service or maintenance procedures, or before moving the unit.

Always empty the bath before moving the unit.

Never operate equipment with damaged line cords.

Refer service and repairs to a qualified technician.

In addition to the safety warnings listed above, warnings are posted throughout the manual. These warnings are designated by an exclamation mark inside an equilateral triangle with text highlighted in bold print. Read and follow these important instructions. Failure to observe these instructions can result in permanent damage to the unit, significant property damage, personal injury or death.

Section II General Information

Description

The RTE-Series Refrigerated Bath/Circulators are designed to provide temperature control for applications requiring a fluid work area or pumping to an external system.

Units consist of a non-CFC air-cooled refrigeration system, circulation pump, seamless stainless steel bath, work area cover, and a temperature controller.

Specifications

	RTE-111	RTE-211	RTE-221
Temperature Range[1]	-25°C to +150°C		-23°C to +150°C
Temperature Stability[2,3,4]	±0.01°C		
Cooling Capacity[2,5]			
Watts	500		
BTU/H	1705		
Pump Capacity[2]	15 lpm at 0' (0 M) 0 lpm at 16' (4.9 M)		
Heater (Watts)			
60 Hz Models	800	800	1600
50 Hz Models	1000	1000	1800
Refrigerant	R134a		
Bath Work Area			
(L x W x D)			
Inches	4 3/4 x 8 x 6	9 1/4 x 10 x 6	9 1/4 x 10 x 9
Centimeters	12.1 x 20.3 x 15.3	23.5 x 25.4 x 15.2	23.5 x 25.4 x 22.9
Bath Volume			
Gallons	1.9	3.2	5.4
Liters	7.0	12.1	20.5
Case Dimensions[6]			
Inches (H x W x D)	25 x 10 5/16 x 15 7/8	25 x 12 3/8 x 18 3/8	27 7/8 x 12 3/8 x 18 3/8
Centimeters (H x W x D)	63.5 x 26.2 x 40.3	63.5 x 31.4 x 46.7	70.8 x 31.4 x 46.7
Power Requirements[7]	115 V, 60 Hz 220V, 50 Hz		
Shipping Weight			
Pounds	86	99	106
Kilograms	39	45	48

1. Low-end temperature for 50Hz units is -18°C, -23°C and -21°C respectively.
2. Specifications listed for units operating to +5°C using water. Other specifications determined using fluid with specific heat of 0.6, ambient +20°C (+70°F).
3. For operation below 0°C, covering the bath work area may improve stability.
4. For some applications, agitation and stability above ambient may be improved by connecting a small length of hose between the pump connections on the rear of the unit.
5. 50 Hz RTE-111 units have a 375 watt cooling capacity.
6. Add 1½ inches (3.8 cm) to depth for plumbing fittings.
7. Control transformer fusing - 115VAC units = (T=Time Delay) 500mA 250V 5 x 20mm (Qty 1), 220VAC units =[T=Time Delay] 250mA 250V to 5 x 20mm (Qty 2).
   Bussman fusing part numbers: 500mA fuse = Bussman S504-500mA
   250mA fuse = Bussman S504-250mA

Section III Installation

Site

The indentations on the unit's sides are designed to function as handles. Lift the unit by the handles and locate it on a sturdy work area. Ambient temperatures should be inside the range of +50°F to +104°F (+10°C to +40°C).



Never place the unit in a location where excessive heat, moisture, or corrosive materials are present.

The unit has an air-cooled refrigeration system. Air is drawn through the front panel and discharged through the rear panel. The unit must be positioned so the air intake and discharge are not impeded. A minimum clearance of 12 inches (30 centimeters) at the front and rear of the unit is necessary for adequate ventilation. Inadequate ventilation will reduce cooling capacity and, in extreme cases, can cause compressor failure.

Excessively dusty areas should be avoided and a periodic cleaning schedule should be instituted (see Section VI, Cleaning).

The unit will retain its full rated capacity in ambient temperatures up to approximately +75°F (+24°C). Above +75°F, reduce the cooling capacity 1% for every 1°F above +75°F, to a maximum ambient temperature of +104°F. In terms of Celsius, reduce the cooling capacity 1% for every 0.5°C above +24°C, to a maximum ambient temperature of +40°C.

Electrical Requirements



Line voltage may be easily accessible inside the pump/control box. Always unplug the unit prior to removing pump/control box cover.

Refer to the serial number label on the rear of the unit to identify the specific electrical requirements of your unit.

Ensure the voltage of the power source meets the specified voltage, ±10%.

The unit construction provides extra protection against the risk of electric shock by grounding appropriate metal parts. The extra protection may not function unless the power cord is connected to a properly grounded outlet. It is the user's responsibility to assure a proper ground connection is provided.



For 220 - 240 volt units supplied without a line cord, use a harmonized (HAR) grounded 3-conductor cord, type H 0 5 V V - F , with conductors listed below. A suitable cord end is required for connecting to the equipment (see unit socket) and must terminate with an IEC approved plug for proper connection to power supply.

RTE-221	**Nominal 1.5 mm² cross section rated 16 Amps**
	Unit Socket: IEC - 320 C19
RTE-111 and RTE-211	**Nominal 1.0 mm² cross section rated 10 Amps**
	Unit Socket: IEC - 320 C13

Plumbing Requirements



Ensure the unit is off before connecting tubing to the unit.

To prevent damage to the plumbing lines, always support the ¾" fittings while installing/removing the pumping caps and lines.

Hose Connections

The pump connections are located at the rear of the pump box and are labelled PUMP INLET and PUMP OUTLET. These connections are bent upward so the recirculating fluid will drain back into the reservoir when the hoses are disconnected. Both connections are capped with stainless steel serrated plugs.

The pump lines have ¼" MPT for mating with standard plumbing fittings. For your convenience stainless steel adapters, ¼" FPT to ⅜" O.D. serrated fitting, are provided. (To assure proper fit, they should be installed using 1½ turns of Teflon® tape around the threads.)

Flexible tubing, if used, should be of heavy wall or reinforced construction. Make sure all tubing connections are securely clamped. Avoid running tubing near radiators, hot water pipes, etc. If substantial lengths of tubing are necessary, insulation may be required to prevent loss of cooling capacity. Tubing and insulation are available from Thermo NESLAB. Contact our Sales Department for more information (see Preface, After-sale Support).

It is important to keep the distance between the unit and the external system as short as possible, and to use the largest diameter tubing practical. Tubing should be straight and without bends. If diameter reductions must be made, make them at the inlet and outlet of the external system, not at the unit.

If substantial lengths of cooling lines are required, they should be pre-filled with bath fluid before connecting them to the unit. This will ensure that an adequate amount of fluid will be in the bath once it is in operation.

Pumping

The pump is designed to deliver a flow of 15 liters per minute (4 gallons per minute) at 0 feet head. To prevent external circulation, the PUMP INLET and PUMP OUTLET lines on the rear of the unit are capped. The caps must be removed when external circulation is required.

To properly secure external hose connections to the unit, wrap Teflon® tape around the pipe line threads before installation. Once the hose connections are made, the hoses must be properly plumbed to an external system. *It is important the bath is not in operation until all plumbing is complete.*

NOTE: To increase agitation in the bath when not circulating externally, connect a short loop of hose between the inlet and outlet lines.

If the bath is not used for external circulation or increased agitation, make sure the stainless steel caps are in place prior to operating the bath.

Circulating to an open container

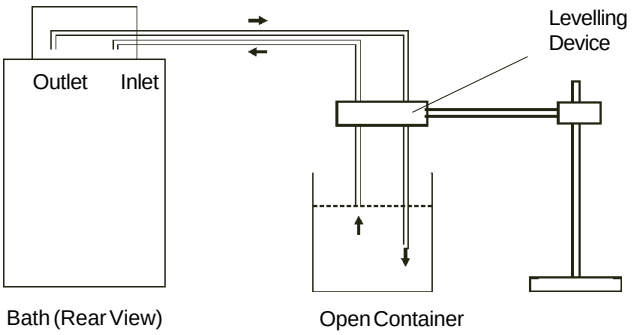

A stainless steel leveling device is available to aid circulation to an open vessel. Contact our Sales Department for more information (see Preface).

Support the leveling device over the open container with a ringstand. Stagger the tubes in the leveling device so one tube is submerged in the vessel fluid, and the other tube is level with the fluid surface. Connect the deeper tube to the PUMP OUTLET and the shorter tube to the PUMP INLET.

Adjust the flow rate using the accessory flow control valve connected to the PUMP OUTLET, or by partially restricting the outlet tubing. When properly adjusted, the pump inlet will draw an occasional air bubble to prevent over flow, and the pump outlet will force fluid through the submerged tube to prevent aeration of the vessel.

To avoid siphoning the bath work area when the unit is shut off, lift the leveling device out of the vessel and above the level of the unit.

Circulating through two closed-loops

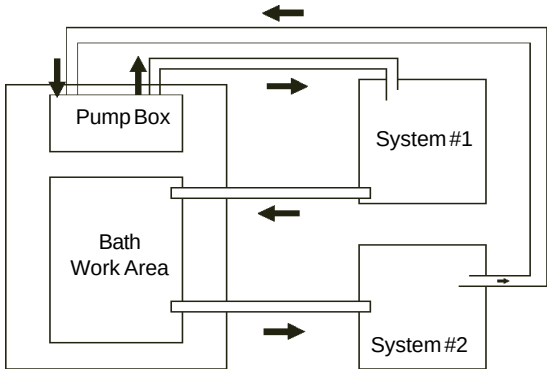

The pump can be used to circulate through two closed-loop systems. Connect the shortest practical length of flexible tubing from the PUMP OUTLET to the inlet of external system #1. Connect the outlet of system #1 directly into the bath work area. Connect tubing from the bath work area to the inlet of system #2. Connect the outlet of system #2 to the PUMP INLET.

Drain



Ensure the temperature of the bath fluid is safe before draining the unit.

The unit is equipped with a drain located at the back of the unit at the base of the bath. The drain has ¼" MPT and is capped with a stainless steel plug. To drain the reservoir simply remove the cap.

To assure proper fit when replacing the cap, be sure to line the threads with 1½ turns of Teflon® tape.

Fluids



Never use flammable or corrosive fluids with this unit.

The selected fluid must have a viscosity of 50 centistokes or less at the lowest operating temperature.

Filtered tap water is the recommended fluid for operation from +8°C to +80°C. See Water Quality Standards and Recommendation on the next page.

For operation from -30°C to +8°C, a 50/50 mixture, by volume, of tap water and laboratory grade ethylene glycol is suggested.



Never use pure ethylene glycol as a bath fluid. Above 80°C and below -30°C, the user is responsible for the fluid used.

Filling Requirements

The bath work area has a high and low level marker to guide filling. The markers are 1 inch horizontal slits located in the center of the stainless steel baffle separating the work area and the pump assembly. The correct fluid level falls between these two markers. The heating and cooling coils will be exposed and may become damaged if the correct fluid level is not provided.

When pumping to an external system, keep extra fluid on hand to maintain the proper level in both the circulating lines and the external system.



Never run the unit when the work area is empty. Avoid overfilling. Overfilling the bath may damage the insulation and affects stability as well as low-end performance.

Water Quality Standards and Recommendations

	Permissible (PPM)	Desirable (PPM)
Microbiologicals		
(algae, bacteria, fungi)	0	0
Inorganic Chemicals		
Calcium	<40	0.6
Chloride	250	<25
Copper	1.3	1.0
Iron	0.3	<0.1
Lead	0.015	0
Magnesium	<12	0.1
Manganese	0.05	<0.03
Nitrates\Nitrites	10 as N	0
Potassium	<20	0.3
Silicate	25	<1.0
Sodium	<20	0.3
Sulfate	250	<50
Hardness	17	<0.05
Total Dissolved Solids	50	10
Other Parameters		
pH	6.5-8.5	7-8
Resistivity	0.01*	0.05-0.1*

* Megohm-Cm (Compensated to 25°C)

Unfavorably high total ionized solids (TIS) can accelerate the rate of galvanic corrosion. These contaminants can function as electrolytes which increase the potential for galvanic cell corrosion and lead to localized corrosion such as pitting which can be observed at the studs and on the outside surface of cooling coils. Eventually, the pitting will become so extensive that the coil will leak refrigerant into the water reservoir.

For example, raw water in the U.S. averages 171 ppm (of NaCl). The recommended level for use in a water system is between 0.5 to 5.0 ppm (of NaCl).

Recommendation: Initially fill the tank with distilled/deionized water. Do not use untreated tap water, as the total ionized solids level may be too high.

Maintain this water quality at a resistivity of between 1 to 10 megohm-cm (compensated to 25°C) by using a purification system. Although the initial fill may be as high as 10 megohm-cm (compensated to 25°C), the desired level for long time usage is 1 to 3 megohm-cm (compensated to 25°C).

The above two recommendations will reduce the electrolytic potential of the water and prevent or reduce the galvanic corrosion observed.

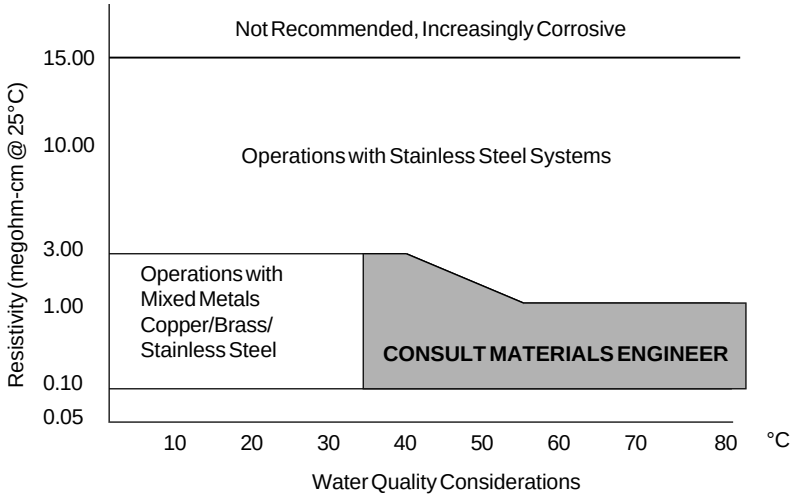

Section IV Operation

Start Up

Before starting the unit, check all electrical and plumbing connections and make sure the work area has been properly filled with bath fluid.

To start the bath, place the I/O circuit breaker on the side of the control box to the **I** (power on) position. The pump will start and the controller will display the temperature of the fluid in the reservoir.

The digital controller controls temperature using a PID (Proportional-Integral-Derivative) algorithm. It is designed with self-diagnostic features and easy to use operator interface.

Controller Keypad & Display

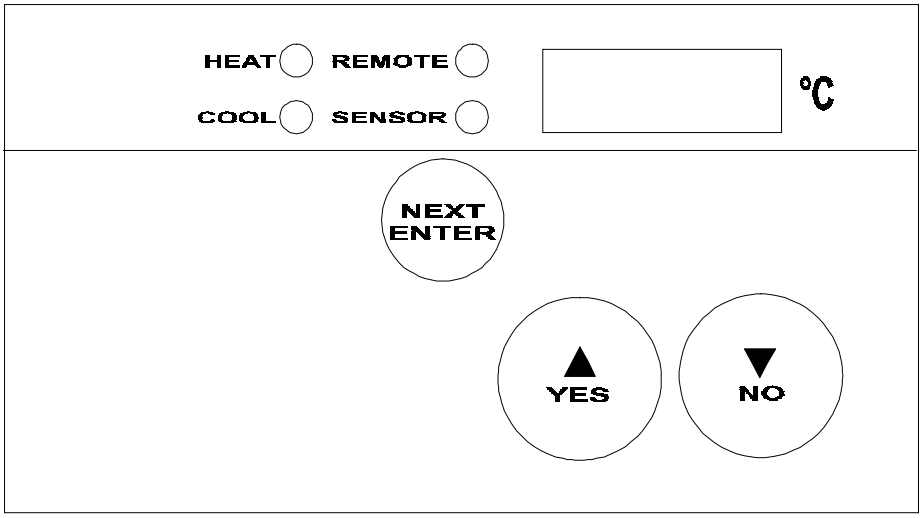

The controller's HEAT and COOL indicators show the status of the refrigeration system and heater. The HEAT indicator is lit when the heater is on. The HEAT indicator flashes when the heater is pulsating. The COOL indicator is lit when the refrigeration system is removing heat from the cooling fluid. A balance between COOL and HEAT controls the temperature.

NOTE: Below 50°C the refrigeration system is on unless the setpoint is more than 2°C above the bath temperature. This allows for rapid heat up. Above 50°C the refrigeration system is off unless the setpoint is more than 2°C below the bath temperature. This allows for rapid cool down.

The REMOTE indicator illuminates whenever the unit is configured to accept a remote setpoint. The controller's SENSOR indicator illuminates whenever the optional external sensor is selected. See Controller Displays on the next page for information on the °C display.

NEXT ENTER
Use this key to scroll forward through the menus and also to accept and save changes.

YES, ▲
This dual purpose key is used to answer Yes to Y/N questions or to increment numerical values upward for setting numeric values.

NO, ▼
This dual purpose key is used to answer No to Y/N questions or to decrement numerical values downward for setting numeric values.

Changing a Value

The **YES** key increments the value. The **NO** key decrements the value.

The display will flash as soon as either key is depressed, and will continue to flash until the **NEXT ENTER** key is pressed twice to accept the new value.

The new value will not be used by the controller until the **NEXT ENTER** key is depressed twice and the display stops flashing.

NOTE: If the **ENTER** key is not depressed twice within 10 seconds, the controller will time out and the new value will not be accepted. The controller will revert to the previous setpoint value.

The controller will not allow you to enter a value above the maximum or below the minimum (normally +150°C and -25°C).

Controller Displays

An alphanumeric display presents numeric readings of various operating conditions within the bath. Display function is selected by pressing the appropriate keys to move through a menu of available information.

When the controller is first powered up it performs a quick self-test then enters the Operator's Loop. The Operator's Loop displays the bath temperature and is used to change the setpoint, see page 12. The Setup Loop can be accessed from the Operator's Loop by pressing and holding the key combinations shown on Figure 1 on the next page. The Setup Loop is used to adjust the controller's PID parameters, select either the internal or optional external sensor, and set the high/low temperature limits. It is also used to select RS232 parameters and display the unit's identification number. See pages 13-14.

Operator's Loop

When the controller is first powered up it enters the Operator's Loop, displaying reservoir fluid temperature. Press the NEXT ENTER key to view the setpoint.

SP displays the controller setpoint. The display will flash between SP and the actual setpoint number. Use the YES/NO keys to change the setpoint value. Once the desired setpoint is displayed, press the NEXT ENTER key twice.

NOTE: If the bath is controlled via RS232 communications, the setpoint can not be changed from the keypad.

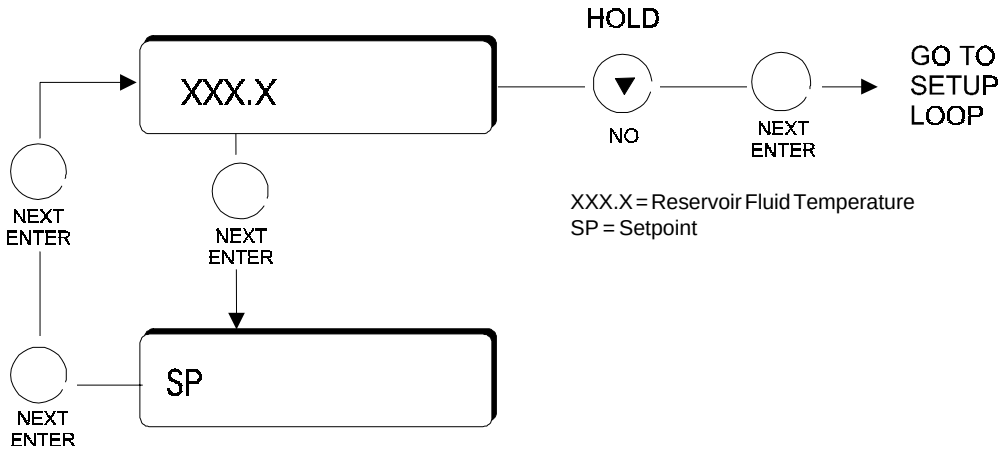

Figure 1 Operator's Loop

Setup Loop

The Setup Loop is used to adjust the controller's PID parameters; select either the internal (1) or optional external (2) sensor; set the high/low temperature limits; adjust RS232 parameters; and display/alter the unit's ID number.

Enter the Setup Loop from the Operator's Loop by pressing and holding the NO key, then press the NEXT ENTER key. Use the YES/NO keys to adjust the values. Press the NEXT ENTER key twice to accept the new value. Press the NEXT ENTER key only once if the value did not change.

While in the Setup Loop, if a key is not pressed during a one-minute time span, the controller will automatically return to the Operator's Loop.

NOTE: If the unit exceeds either temperature limit, the appropriate error message will flash, see page 21. The unit will not shut down (unless the temperature also exceeds the high temperature safety setting, see page 15).You will also receive an error code if the optional external sensor is selected but it is not installed.

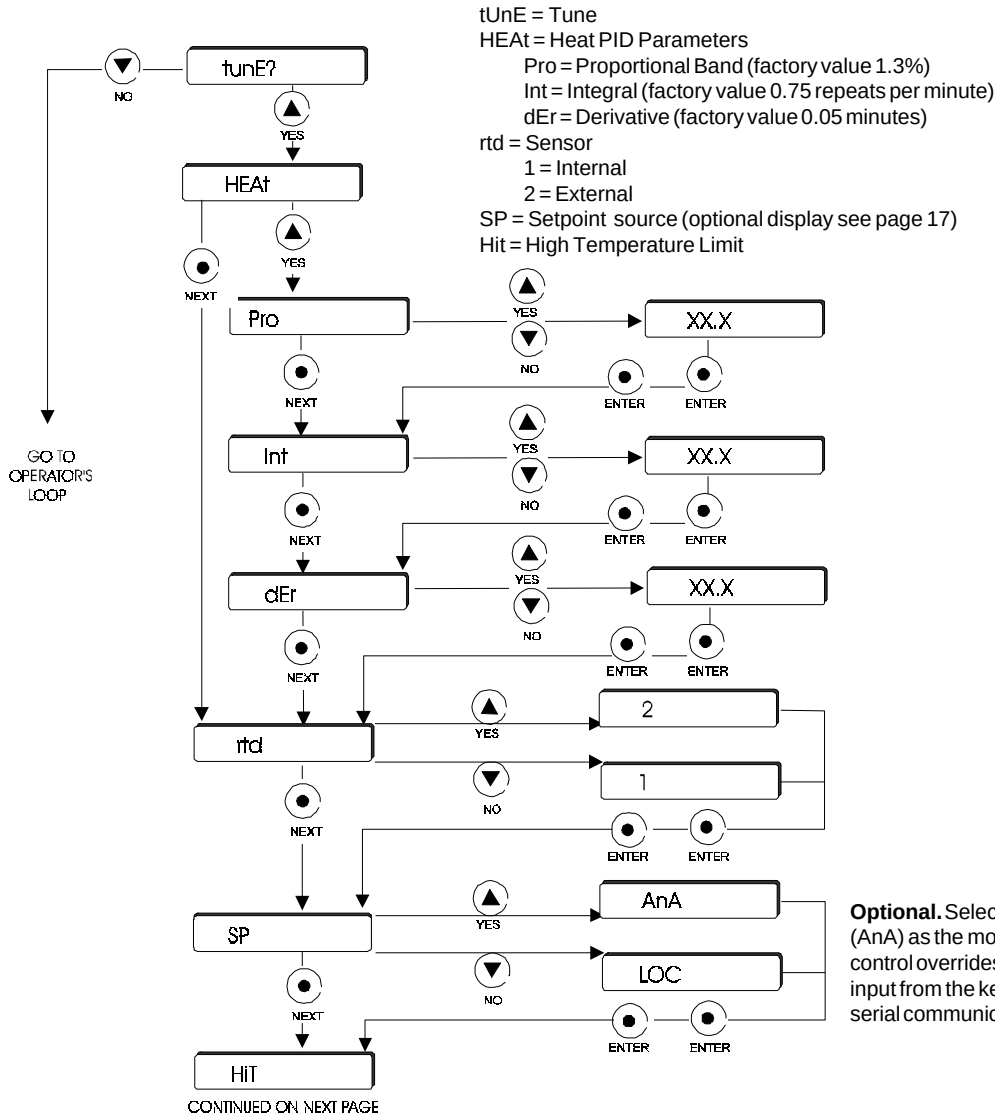

Figure 2 Setup Loop (1 of 2)

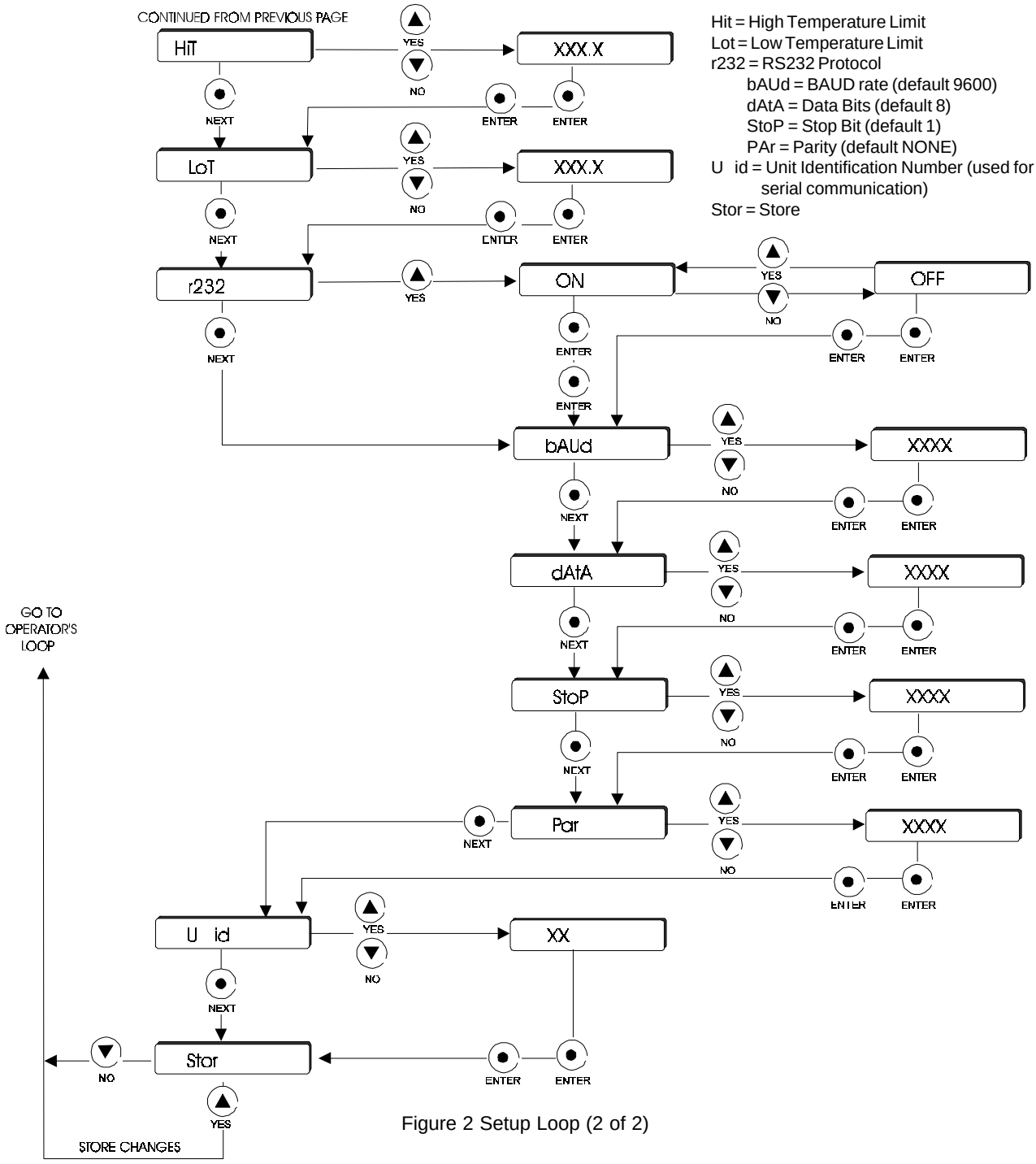

Figure 2 Setup Loop (2 of 2)

NOTE: To save *all* changes, when the display reads **Stor** press **YES**. Should you desire to return to the temperature display and abort *all* changes, when the display reads **Stor** press **NO.**

High Temperature/ Low Liquid Level Safety

To protect your application, the adjustable High Temperature/Low Liquid Level Safety (HIGH TEMP/LOW LEVEL) ensures the heater will not exceed temperatures that can cause serious damage to your unit. A single temperature sensor, located on the heater coils in the bath, monitors both conditions. A High Temperature/Low Liquid Level fault occurs when the temperature of the sensor exceeds the set temperature limit. The safety switch has a temperature range of 7°C to 180°C.

In the event of a fault, the red LED near the adjustment dial will light, the display will go blank, and the unit will shut down. The cause of the fault must be identified and corrected before the unit can be restarted.

The safety is not preset and must be adjusted during initial installation.

To set the safety, locate the HIGH TEMP/LOW LEVEL SAFETY adjustment dial on the right side of the pump box. Turn the dial fully clockwise and turn the I/O switch off then back on.

Start the unit. Adjust the setpoint for a few degrees higher than the highest desired fluid temperature and allow the bath to stabilize at the temperature setpoint. Turn the HIGH TEMP/LOW LEVEL SAFETY dial counterclockwise until you hear a click and the unit shuts down. The red LED near the adjustment dial will light to indicate a fault has occurred.

Cool the bath and then, without moving the adjustment dial, turn the I/O switch off then back on.

NOTE: Thermo NESLAB recommends rechecking operation if the unit is moved.

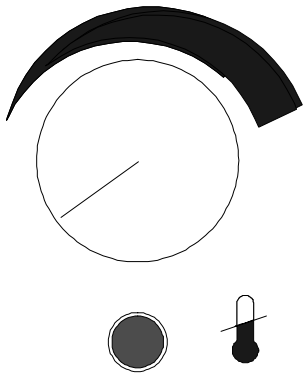

High Temperature/Low Liquid Level Safety

9-Pin Accessory Connector

The unit is equipped with two 9-pin D-connectors located on the rear of the control box. The female COMM is used for RS232 communication (see Appendix A); the male is used with an optional external sensor.

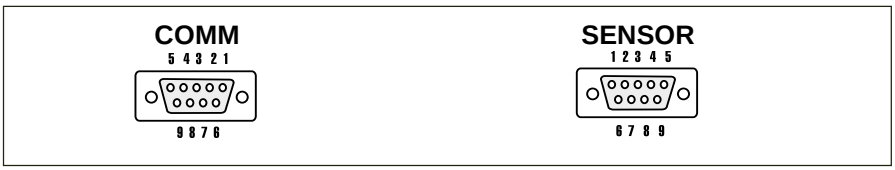

COMM Pin Connections

Pin #	Function
1	No connection.
2	TX = Transmitted data from controller
3	RX = Received data to controller
4	No connection
5	GND = Signal ground
6	No connection.
7	No connection
8	No connection
9	No connection

Hardware	Internal Connector	Mating Connector
	AMP Part# 745491-2	**AMP Part# 745492-2**

Remote Sensor Connections

Pin #	Function
1	3-wire RTD connection A
2	No connection
3	No connection
4	3-wire RTD connection A
5	No connection
6	No connection.
7	3-wire RTD connection B
8	No connection
9	No connection

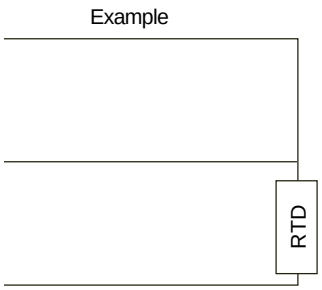

Hardware	Internal Connector	Mating Connector
	AMP Part# 745492-2	**AMP Part# 745491-2**

Analog Interface (Optional)

An optional 15-pin D subminiature female receptacle for analog interface is located on the rear of the control/pump box.

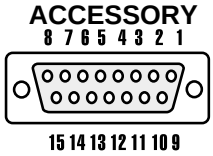

Pin #	Function
1	Chassis ground.
2	No connection.
3 - 5	No connection.
6	Analog Ground. The analog ground is physically separated from the power ground throughout the unit. To prevent offsets that result from ground currents, the analog and power grounds are only connected at the unit's power supply. Analog ground should only be used as a reference pin.
7	Temperature Out. The fluid temperature, as measured by the sensor slected in theSetup Loop (see page 13) , can be read at this pin. The temperature scale is 10mV/°C, referenced to analog ground, pin 6 (example: +150mV = +15.0°C).
8	No connection.
9	Power Ground (5V RTN).
10 - 13	No connection.
14	+5V. Power supply of +5VDC (15mA maximum).
15	Setpoint In. The temperature setpoint can be controlled by applying a known voltage to this pin. The temperature scale is 10mV/°C, referenced to analog ground, pin 6 (example: +230mV = +23.0°C). **Note**: The setpoint is updated only when the voltage represents a temperature within the setpoint limits.

The analog setpoint signal (Setpoint In) is enabled using the unit's software. Using the Setup Loop discussed on page 13, keep depressing the NEXT ENTER key until SP is displayed. Use the YES or NO key to display the desired mode, AnA for analog or LoC for local, then press NEXT ENTER to continue with the loop. **NOTE:** The last value entered is maintained when SP is changed from AnA to LOC or LOC to AnA until a valid voltage is applied.

Store the change.

NOTE: Selecting Analog Input (AnA) as the mode of temperature control overrides both manual input from the keypad, and any serial communication input.

The Analog In and Analog Out discussed in the Calibration Loop on pages 23 and 24 is applicable to this unit. Analog In calibration is done by applying a 2Vdc signal for AiH, and a 0Vdc signal for AiL. Reference the appropriate pins on the ACCESSORY connector.

Analog Out calibration is done by measuring the appropriate pins on the ACCESSORY connector. Adjust the AoH to 1.000Vdc using the YES and NO keys then press ENTER twice. Adjust the AoL to 0.000Vdc using the YES and NO keys then press ENTER twice.

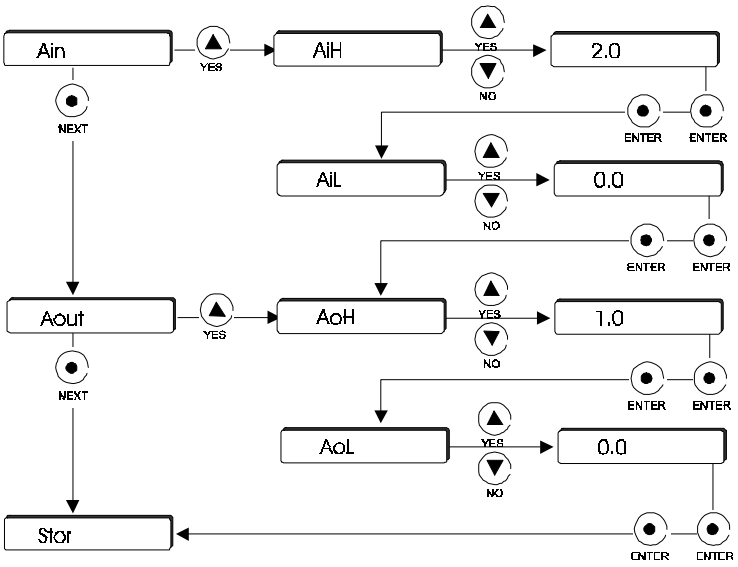

Autorefill (Optional)

The autorefill device is designed to maintain the correct level of fluid in the reservoir. The device consists of a float switch and a solenoid valve. If the fluid level falls, the float switch opens the solenoid valve allowing makeup fluid to fill the reservoir. Once the fluid reaches the proper level, the float switch rises and the solenoid valve closes.

The plumbing connection for the autorefill device, labeled WATER INLET, is located on the rear of the autorefill assembly. The connection is $^{3}/_{8}$" OD stainless steel. To prevent damage to your hosing and to prevent the hose from slipping of the connection, install the supplied hose barb into your tubing. Tubing is also available from Thermo NESLAB. Contact our Sales Department.

Remove the nut on the WATER INLET connection and install the tubing from your makeup fluid source. Reinstall the nut and tubing on the connection. Install the device on the unit. To secure the device to the unit, tighten the screw located between the float switch and the makeup fluid outlet line. If desired, place the supplied cover on the unit.

The autorefill device requires its own source of electrical power. A connector for the supplied line cord is also located on the rear of the autorefill device. The connector is labelled POWER.

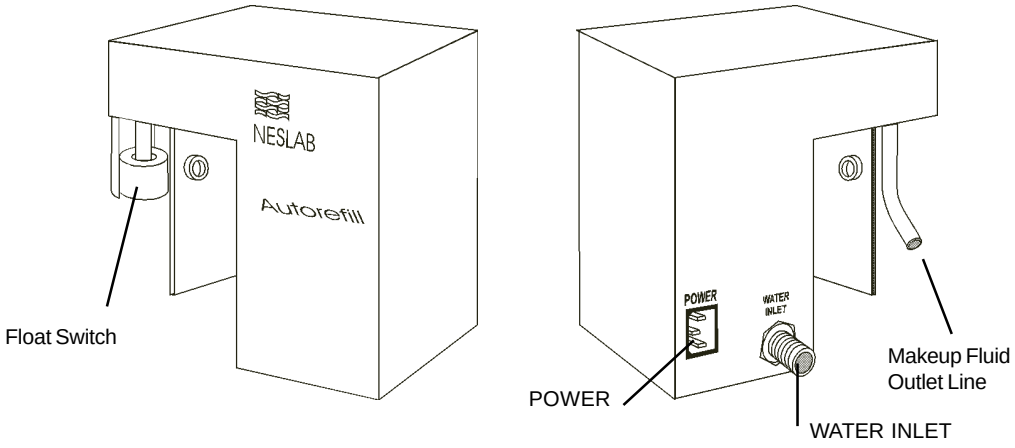

Flow Control Valve (Optional)

An optional flow control valve is available to control external circulation. The valve assembly consists of the nine pieces shown below. Once assembled and installed on the unit, clamp a hose to the end of the assembly. Turn the unit on and check for leaks with the valve opened as well as closed.

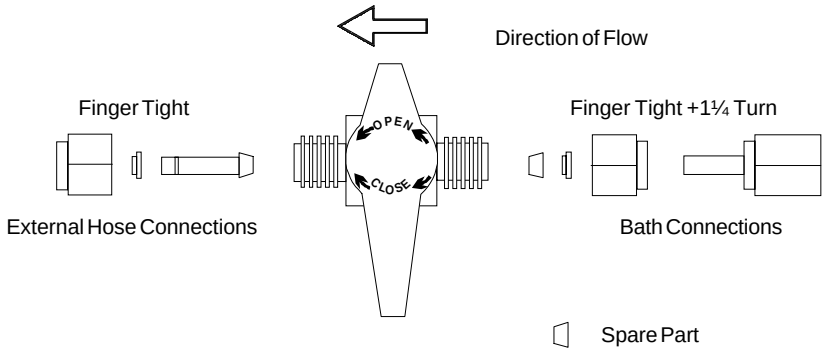

Sealable Bath Lid (Optional)

Depending on your application requirements and/or working environment, a bath lid is available to make RTE-111 reservoirs sealable (not pressurized).

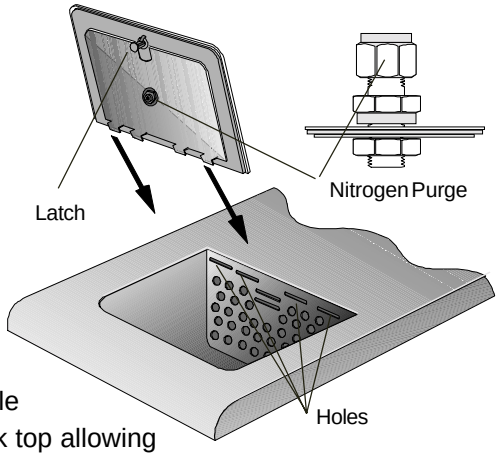

The top of the pump grate in the unit's reservoir has four holes cut into the sheet metal. Align the protrusions on the lid with these holes as shown. A locking adjustable grip latch tightens the lid to the tank top allowing an EDPM gasket to create a seal.

The lid also has a nitrogen purge port. The purge port is a ¼" male Swageloc connector with an o-ring seal.

Section V Maintenance

To avoid electrical shock, disconnect the mains cord prior to removing any access panels or covers.

Service Contracts

Thermo NESLAB offers on-site Service Contracts designed to provide extended life and minimal down-time for your unit. For more information, contact our Service Department (see Preface, After-sale Support).

Reservoir Cleaning

Routine cleaning can be achieved by simply sponging down the seamless stainless steel tank with tap water. (Dish washing detergent may be used but the tank must be thoroughly rinsed.)

To gain access to the entire reservoir the pump box and reservoir cover should be removed.

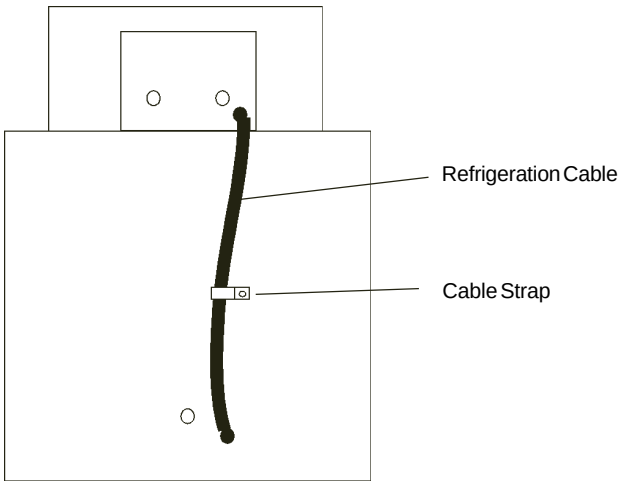

Remove the line cord from the rear of the unit and then remove the four screws (two on each side) securing the reservoir's cover.

To get slack on the refrigeration cable, remove the cable strap. The cable itself does not need to be disconnected.

Turn the cover assembly over and carefully place it on a supporting platform.

Algae

To restrict the growth of algae in the bath, we recommend the bath cover be kept in place and that all circulation lines be opaque. This will eliminate the entrance of light required for the growth of most common algae.

Thermo NESLAB recommends the use of Chloramine-T, 1 gram per 3½ liters.

Condenser

For proper operation, the unit needs to pull substantial amounts of air through a condenser. A build up of dust or debris on the fins of the condenser will lead to a loss of cooling capacity.

Periodic vacuuming of the condenser is necessary. To access the condenser the front grille must be removed.



The unit must be turned off before the front panel is removed.

RTE-111 units have a one-piece grille assembly. Pull forward to remove.

RTE-211 and RTE-221 units have a two piece grille assembly. First remove the left (blue-colored) section by simply pulling it forward. Pull forward on the remaining (white-colored) section to remove it.

The frequency of cleaning depends on the operating environment. After initial installation, we recommend a monthly visual inspection of the condenser. After several months, the frequency of cleaning will be established.

Error Messages

Error	Action
Er00:	ROM Checksum
Er01:	RAM Test Failed
Er02:	Keypad Test Failed
Er04-13:	Interrupt Error
Er14:	Synchronous Error
Er15:	Asychronous Error
Er16:	Bad Calibration
LoT:	Low Temp Limit
HiT:	High Temp Limit
Er23:	RTD2 Shorted
Er24:	RTD2 Open/Not Installed
Er25:	RTD1 Shorted
Er26:	RTD1 Open
HTC:	High Temperature Cutout
PrES:	Pressure Cutout

NOTE: HTC and PrES are optional displays available only on specially modified units. Errors 00 through 15 will lockup the controller keypad. Errors 00 through 03 may be cleared by depressing the NEXT ENTER key.

Additional Loops

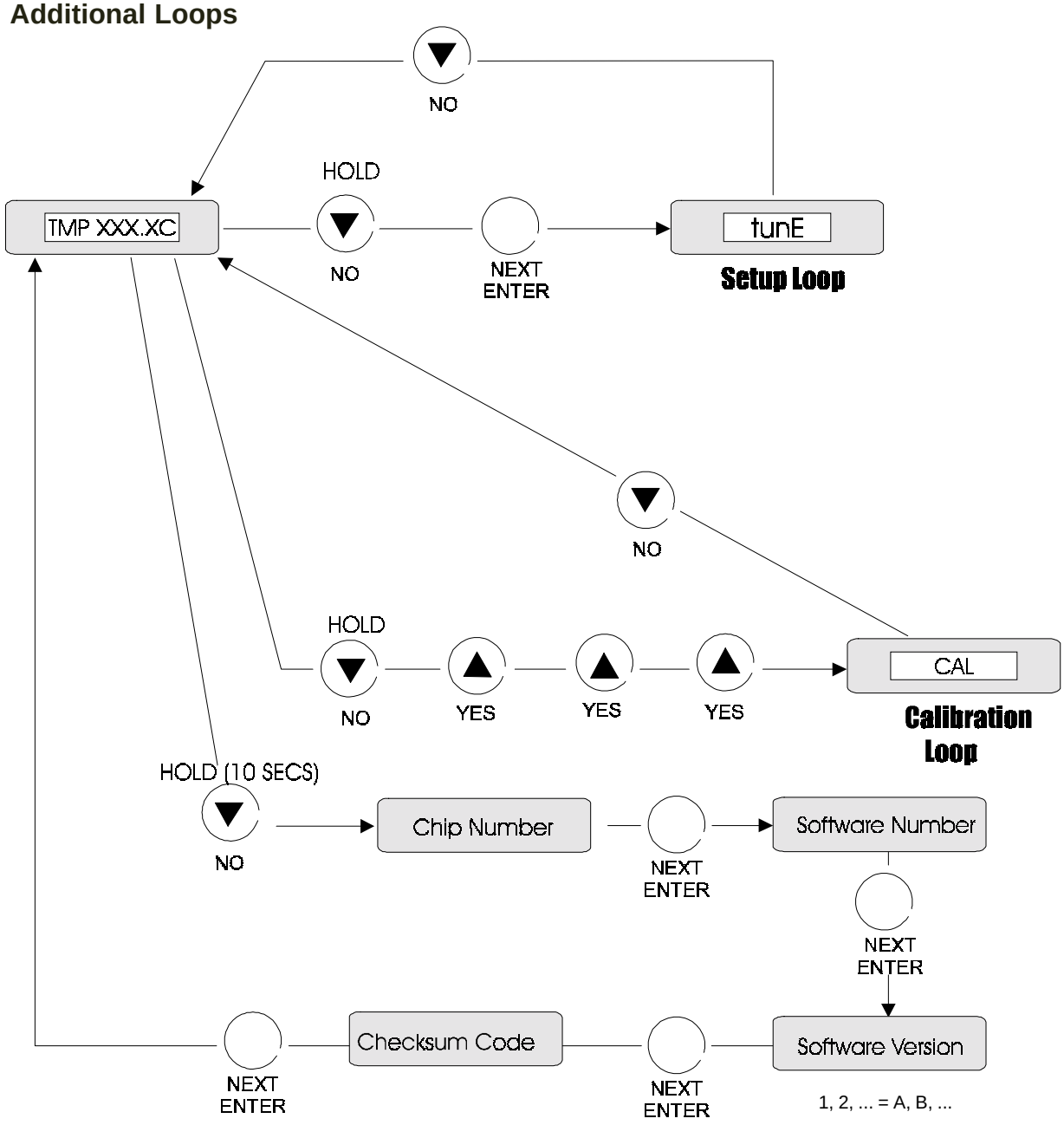

Figure 3 Additional Loops

Calibration Loop

The Calibration Loop is used to calibrate the RTD high and low temperature. The controller's internal temperature sensor is factory calibrated. We recommend calibrating any external sensor.

Enter the Calibration Loop from the Operator's Loop by pressing and holding the NO key while pressing the YES key three times.

Calibration Procedure

Install a calibrated reference thermometer in the bath. (For external mode, also install the sensor in the bath.) Place the cover on the unit.

The procedure uses the Operator's, Setup and Calibration Loops. In the Setup Loop place the unit in either the internal or external RTD mode of operation (RTD1 = Internal , RTD2 = External). Return to the Operator's Loop and adjust the setpoint to an appropriate high-end temperature.

NOTE: When calibrating the external sensor ensure the controller's SENSOR indicator is illuminated.

Once the bath reaches the setpoint and stabilizes, go to the Calibration Loop and, as illustrated on the next page, enter the actual reference thermometer reading at either the r1H or r2H prompt.

Store the change and return to the Operator's Loop. Adjust the setpoint to an appropriate low-end temperature. Once the bath reaches the setpoint and stabilizes, return to the Calibration Loop and enter the reference thermometer reading at either the r1L or r2L prompt. Store the change.



Do not pick points that are outside the safe operating limits of the fluid in your application. For example with a water bath, 90°C and 5°C would be typical calibration points.

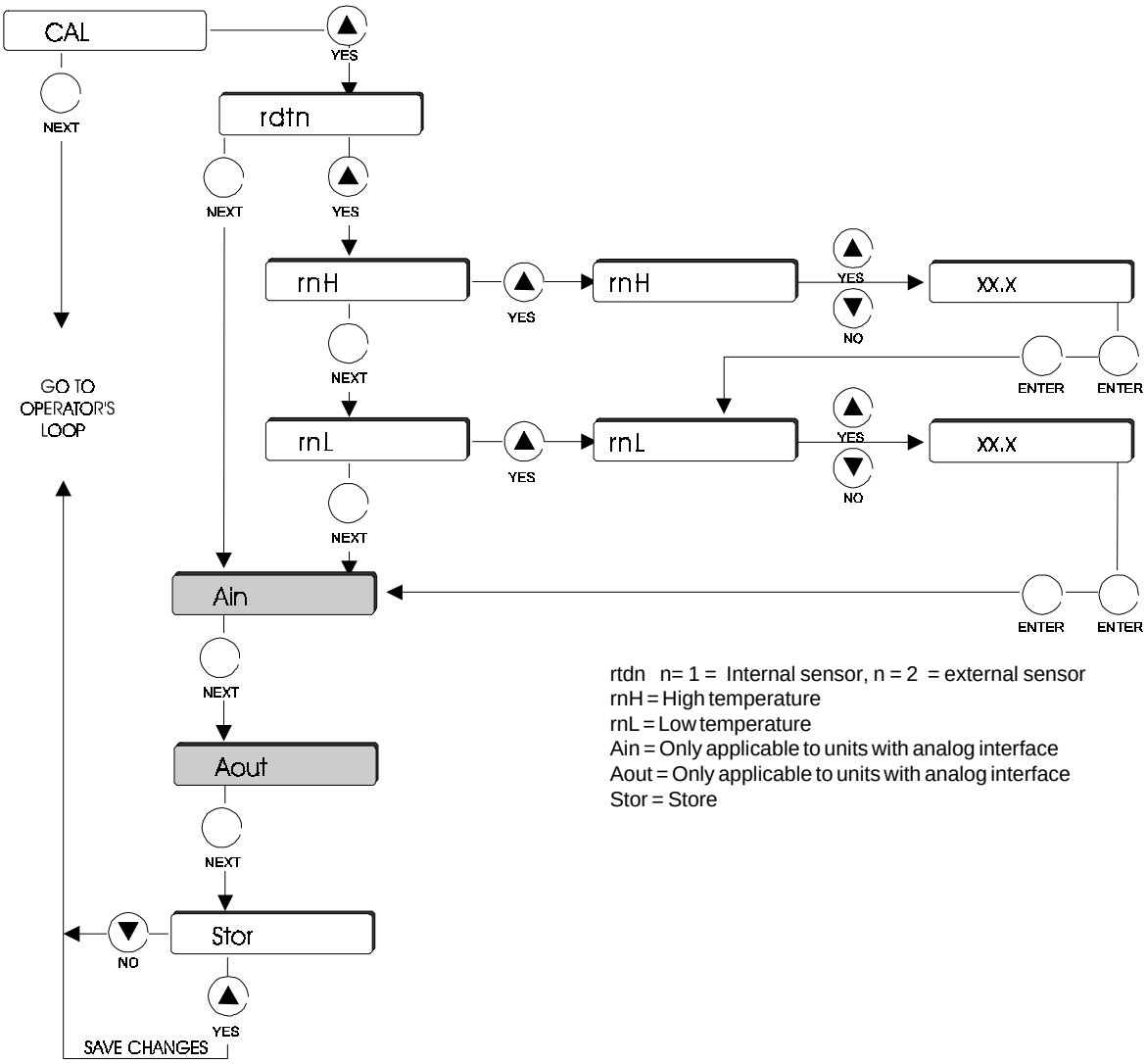

Figure 4 Calibration Loop

NOTE: To save *all* changes, when the display reads **Stor** press **YES**. Should you desire to return to the temperature display and abort *all* changes, when the display reads **Stor** press **NO.**

Section VI Troubleshooting

Checklist

Unit will not start

Make sure the voltage of the power source meets the specified voltage, ±10%. Refer to the serial number label on the rear of the unit to identify the specific electrical requirements of your unit.

Check the High Temperature/Low Liquid Level Safety. If the red LED on the side of the controller is on, make sure the fluid level in the bath is between the marks in the baffle and the HIGH TEMP/LOW LEVEL SAFETY setting is greater than the fluid temperature. Turn the I/O switch off then back on, and attempt to restart.

Loss of cooling capacity

Be sure the cooling capacity of the unit has not been exceeded if circulating to an external system.

When the unit is shut off, wait approximately five minutes before restarting. This allows time for the refrigeration pressures to equalize. If the pressures are not allowed to equalize, the compressor will short-cycle (clicking sound) and no cooling will occur.

Proper ventilation is required for heat removal. Make sure ventilation through the front and rear panels is not impeded and the panels are free of dust and debris.

Ice build up on the cooling coils can act as insulation and lower the cooling capacity. Raise the temperature of the bath to de-ice the cooling coil and increase the concentration of non-freezing fluid.

No external circulation

Check for obstructions, kinks, or leaks in the circulation tubing.

Circulation will cease when the pump head has been exceeded.

No/poor temperature control

Check RS232/remote operation on or off.

Selecting the optional Analog Input (AnA) as the mode of temperature control overrides both manual input from the keypad, and any serial communication input.

Check external sensor connection. Perform calibration.

Continued on next page.

No serial communications

All units are tested for serial communications before they leave the factory. Ensure the REMOTE indicator on the controller is illuminated.

Check all communications commands, they *must be exact*. See Appendix A.

Check communications settings. The protocol uses an RS-232 serial interface with the parameters: 9600 baud, 8 data bits, 1 stop bit and no parity.

Check all wiring for proper connections or possible shorts.

Software to verify serial communication is available from Thermo NESLAB.

Service Assistance and Technical Support

If, after following these troubleshooting steps, your unit fails to operate properly, contact our Customer Service Department for assistance (see Preface, After-sale Support). In addition to arranging warranty service, our Service Department can provide you with a wiring diagram and a complete list of spare parts for your unit. Before calling, please obtain the following:

Part number
Serial number
Software Version

Appendix A Serial Communications Protocol

NOTE: This appendix assumes you have a basic understanding of communications protocols.

All data is sent and received in binary form, do not use ASCII. In the following pages the binary data is represented in hexadecimal (hex) format.

The Neslab Serial Communications Protocol, NC, is based on a master-slave model. The master is a host computer, while the slave is the bath's controller. Only the master can initiate a communications transaction (half-duplex). The slave ends the transaction by responding to the master's query. The protocol uses an RS-232 serial interface with the default parameters: 9600 baud, 1 start bit, 8 data bits, 1 stop bit and no parity.

NOTE: Before the unit will communicate, RS232 must be turned on in the controller's Setup Loop.

The unit can be controlled through your computer's serial port by using the unit's standard 9-pin RS-232 connection. Data read of the serial port connects to the data transmit (pin 2) of the bath. Data transmit of the serial port connects to data read (pin 3) of the bath.

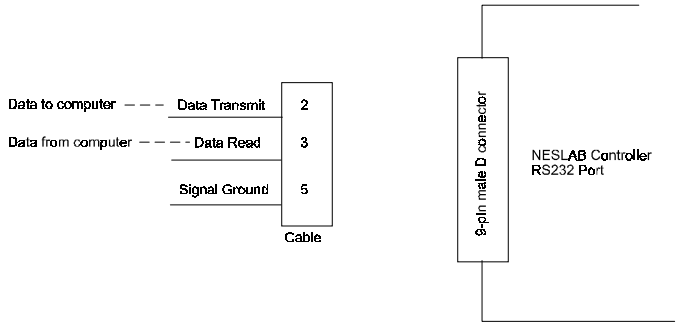

Communication cables are available from Thermo NESLAB. Contact our sales department for additional information.

All commands must be entered in the exact format shown in the tables on the following pages. The tables on on the last page of this Appendix show all commands available, their format and responses. Controller responses are either the requested data or an error message. The controller response *must* be received before the host sends the next command.

The host sends a command embedded in a single communications packet, then waits for the controller's response. If the command is not understood or the checksums do not agree, the controller responds with an error command. Otherwise, the controller responds with the requested data. If the controller fails to respond within 1 second, the host should resend the command.

NC Serial Communications Protocol

NOTE: All byte values are shown in hex, hex represents the binary values that must be sent to the bath. **Do not use ASCII.**

The framing of the communications packet in both directions is:

	Checksum region						
Lead char CA	Addr-MSB 00	Addr-LSB 01	Command	n d-bytes	d-byte 1 ...	d-byte n	Checksum

Lead char	CA (hex).
	Device address is 1
Addr-msb	Most significant byte of device address is 00 hex.
Addr-lsb	Least significant byte of device address is 01 hex.
Command	Command byte (see Table 1).
n d-bytes	Number of data bytes to follow (00 to 03 hex).
d-byte 1	1st data byte (the qualifier byte is considered a data byte).
...	...
d-byte n	nth data byte.
Checksum	Bitwise inversion of the 1 byte sum of bytes beginning with the most significant address byte and ending with the byte preceding the checksum. (To perform a bitwise inversion, "exclusive OR" the one byte sum with FF hex.)

The master requests information by sending one of the Read Functions as shown in Table 1 on page 30. Since no data is sent to the bath during a read request, the master uses 00 for the number of data bytes following the command byte.

The bath will respond to a Read Function by echoing the lead character, address, and command byte, followed by the requested data and checksum. When the bath sends data, a qualifier byte is sent first, followed by a two byte signed integer (16 bit, MSB sent first). The qualifier byte indicates the precision and units of measure for the requested data as detailed in Table 2, see page 30.

As an example, the master requests to read internal temperature by sending:



If the temperature is -10.5°C, the slave would reply:

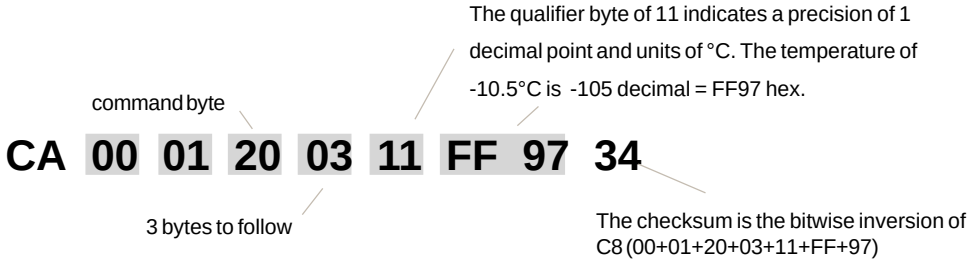

The master sets parameters in the bath by sending one of the Set Functions as shown in Table 1. The master does not send a qualifier byte in the data field. The master should be preprogrammed to send the correct precision and units (it could also read the parameter of interest first to decode the correct precision and units needed).

For example, if the master wants to set the setpoint to 30°C, it would send :

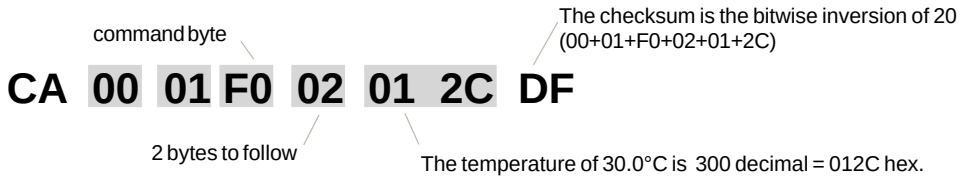

The slave responds:

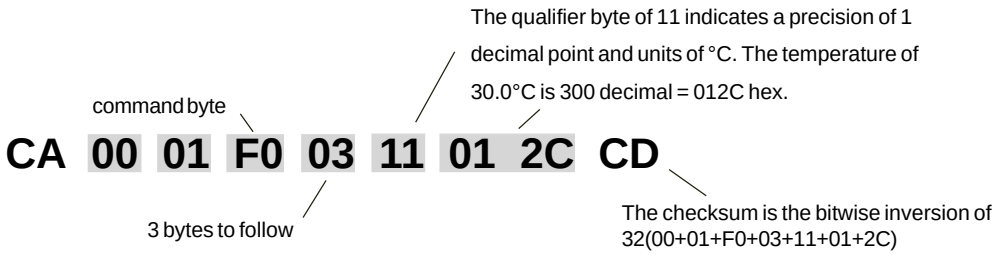

Table 1 (All bytes are in hex)

FUNCTION	MASTER SENDS	BATH RESPONDS
READ		
Read Internal Temperature	CA 00 01 **20** 00 DE	CA 00 01 **20** 03 qb d1 d2 cs
Read External Sensor	CA 00 01 **21** 00 DD	CA 00 01 **21** 03 qb d1 d2 cs
Read Setpoint (control point)	CA 00 01 **70** 00 8E	CA 00 01 **70** 03 qb d1 d2 cs
Read Low Temperature Limit	CA 00 01 **40** 00 BE	CA 00 01 **40** 03 qb d1 d2 cs
Read High Temperature Limit	CA 00 01 **60** 00 9E	CA 00 01 **60** 03 qb d1 d2 cs
Read Proportional Band (P)	CA 00 01 **71** 00 8D	CA 00 01 **71** 03 qb d1 d2 cs
Read Integral (I)	CA 00 01 **72** 00 8C	CA 00 01 **72** 03 qb d1 d2 cs
Read Derivative (D)	CA 00 01 **73** 00 8B	CA 00 01 **73** 03 qb d1 d2 cs
SET		
Set Setpoint (control point)*	CA 00 01 **F0** 02 d1 d2 cs	CA 00 01 **F0** 03 qb d1 d2 cs
Set Low Temperature Limit*	CA 00 01 **C0** 02 d1 d2 cs	CA 00 01 **C0** 03 qb d1 d2 cs
Set High Temperature Limit*	CA 00 01 **E0** 02 d1 d2 cs	CA 00 01 **E0** 03 qb d1 d2 cs
Set Proportional Band (P=1-99.9)	CA 00 01 **F1** 02 d1 d2 cs	CA 00 01 **F1** 03 qb d1 d2 cs
Set Integral (I = 0-9.99)	CA 00 01 **F2** 02 d1 d2 cs	CA 00 01 **F2** 03 qb d1 d2 cs
Set Derivative (D= 0-5.0)	CA 00 01 **F3** 02 d1 d2 cs	CA 00 01 **F3** 03 qb d1 d2 cs
BATH ERROR RESPONSES		
Bad Command	N/A	CA 00 01 **0F** 02 01 ed cs
Bad Checksum	N/A	CA 00 01 **0F** 02 03 ed cs
MISCELLANEOUS		
Request Acknowledge	CA 00 01 **00** 00 FE	CA 00 01 **00** 02 v1 v2 cs

command bytes shown in **bold**
qb = qualifier byte
d1,d2 = 16 bit signed integer of the value being sent or received
cs = the checksum of the string (see text)
ed = echo back of the command byte as received
v1,v2 = protocol version
* = limited to the range of the bath

Table 2

QUALIFIER BYTE

10 hex	0.1 precision, no units of measure
20 hex	0.01 precision, no units of measure
11 hex	0.1 precision, °C units

Example: The temperature of 45.6 °C would be represented by the qualifier 11 hex, followed by the 2 bytes 01 C8 hex (456 decimal).

Appendix B Programming Software

NEScom Software/ RS232 Communication

The Thermo NESLAB Communications Software is a user-friendly software that allows you to automate your temperature control process. The software includes a 3½" disk, comprehensive operator's manual and a toll-free number to a trained technical staff.

NEScom Software allows you to write custom temperature programs for our Digital or Microprocessor based temperature control apparatus. Choose upper or lower temperature limits and monitor system status with an alarm. NEScom can also record your results on a user selectable graph. NesCom must be used with an IBM or 100% compatible computer.

Select from easy to use product icons.

Create graphs and charts.

Easily configure ramping functions that set the setpoint over time.

View pop-up alarm windows that display if an alarm condition occurred.

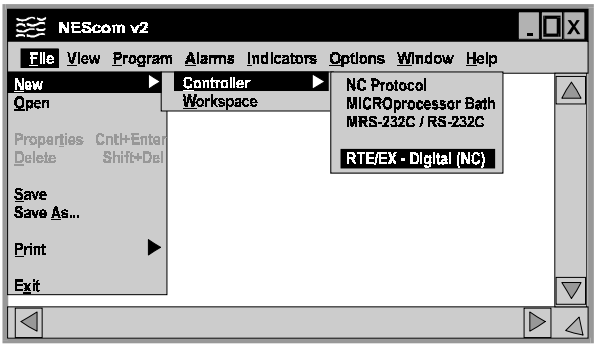

Select software functions from the easy to use pulldown menus.

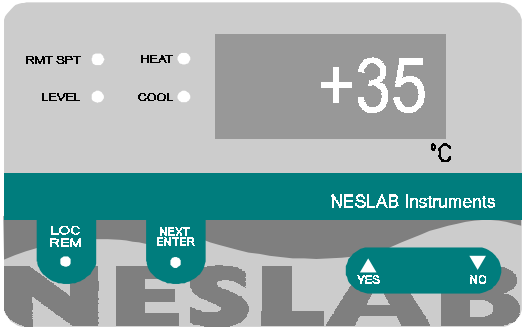

View a virtual controller screen which allows remote monitoring and operation of product control panel.

WARRANTY

Thermo NESLAB Instruments, Inc. warrants for 12 months from date of shipment any Thermo NESLAB unit according to the following terms.

Any part of the unit manufactured or supplied by Thermo NESLAB and found in the reasonable judgment of Thermo NESLAB to be defective in material or workmanship will be repaired at an authorized Thermo NESLAB Repair Depot without charge for parts or labor. The unit, including any defective part must be returned to an authorized Thermo NESLAB Repair Depot within the warranty period. The expense of returning the unit to the authorized Thermo NESLAB Repair Depot for warranty service will be paid for by the buyer. Thermo NESLAB's responsibility in respect to warranty claims is limited to performing the required repairs or replacements, and no claim of breach of warranty shall be cause for cancellation or recision of the contract of sales of any unit.With respect to units that qualify for field service repairs, Thermo NESLAB's responsibility is limited to the component parts necessary for the repair and the labor that is required on site to perform the repair. Any travel labor or mileage charges are the financial responsibility of the buyer.

The buyer shall be responsible for any evaluation or warranty service call (including labor charges) if no defects are found with the Thermo NESLAB product.

This warranty does not cover any unit that has been subject to misuse, neglect, or accident. This warranty does not apply to any damage to the unit that is the result of improper installation or maintenance, or to any unit that has been operated or maintained in any way contrary to the operating or maintenance instructions specified in Thermo NESLAB's Instruction and Operation Manual. This warranty does not cover any unit that has been altered or modified so as to change its intended use.

In addition, this warranty does not extend to repairs made by the use of parts, accessories, or fluids which are either incompatible with the unit or adversely affect its operation, performance, or durability.

Thermo NESLAB reserves the right to change or improve the design of any unit without assuming any obligation to modify any unit previously manufactured.

THE FOREGOING EXPRESS WARRANTY IS IN LIEU OF ALL OTHER WARRANTIES, EXPRESSED OR IMPLIED, INCLUDING BUT NOT LIMITED TO WARRANTIES OR MERCHANTABILITY AND FITNESS FOR A PARTICULAR PURPOSE.

Thermo NESLAB'S OBLIGATION UNDER THIS WARRANTY IS STRICTLY AND EXCLUSIVELY LIMITED TO THE REPAIR OR REPLACEMENT OF DEFECTIVE COMPONENT PARTS AND Thermo NESLAB DOES NOT ASSUME OR AUTHORIZE ANYONE TO ASSUME FOR IT ANY OTHER OBLIGATION.

Thermo NESLAB ASSUMES NO RESPONSIBILITY FOR INCIDENTAL, CONSEQUENTIAL, OR OTHER DAMAGES INCLUDING, BUT NOT LIMITED TO LOSS OR DAMAGE TO PROPERTY, LOSS OF PROFITS OR REVENUE, LOSS OF THE UNIT, LOSS OF TIME, OR INCONVENIENCE.

This warranty applies to units sold in the United States. Any units sold elsewhere are warranted by the affiliated marketing company of Thermo NESLAB Instruments, Inc. This warranty and all matters arising pursuant to it shall be governed by the law of the State of New Hampshire, United States. All legal actions brought in relation hereto shall be filed in the appropriate state or federal courts in New Hampshire, unless waived by Thermo NESLAB.

RTE Bath/Circulator
with
Microprocessor Controller

ThermoNESLAB Manual P/N 000260
Rev. 09/20/00

Instruction and Operation Manual



RTE-Series Refrigerated Bath/Circulator

Table of Contents

PREFACE

Compliance 2
Unpacking 2
Warranty 2
NES-care 2
After-sale Support 2

SECTION I
Safety

Warnings 3

SECTION II
General Information

Description 4
Specifications 4

SECTION III
Installation

Site 5
Electrical Requirements 5
Plumbing Requirements 6
Fluids 8
Filling Requirements 8

SECTION IV
Controllers

Microprocessor Controller 9
Start Up 11
Temperature Adjustment 12
Alarm/External Functions 13
Program Functions 14
Program Control 16
Error Messages 20
Miscellaneous 20
PID Control 21
Restoring Factory PID Values 21
MIN Power Mode 21
Calibration 22
High Temperature/Low Liquid Level Safety 24

SECTION V
Maintenance

Service Contracts 25
Condenser 25
Reservoir Cleaning 25
Algae 26

SECTION VI
Troubleshooting

Checklist 27
Service Assistance and Technical Support 28

APPENDIX A

RS-232

APPENDIX B

International Quick Reference Guides

APPENDIX C

Programming Software

WARRANTY

Preface

Compliance

Products tested and found to be in compliance with the requirements defined in the EMC standards defined by 89/336/EEC as well as Low Voltage Directive (LVD) 73/23/EEC can be identified by the CE label on the rear of the unit. The testing has demonstrated compliance with the following directives:

LVD, 73/23/EEC	Complies with UL 3101-1:93
EMC, 89/336/EEC	EN 55011, Class A Verification EN 50082-1:1992 IEC 1000-4-2:1995 IEC 1000-4-3:1994 IEC 1000-4-4:1995

For any additional information refer to the Letter of Compliance that shipped with the unit (Declaration of Conformity).

Unpacking

Retain all cartons and packing material until the unit is operated and found to be in good condition. If the unit shows external or internal damage, or does not operate properly, contact the transportation company and file a damage claim. Under ICC regulations, this is your responsibility.

On units with a remote control box, the box may be packed in a separate carton. Be sure to locate this separate carton; do not dispose of it by mistake.

Warranty

Units have a warranty against defective parts and workmanship for one full year from date of shipment. See back page for more details.

NES-care Extended Warranty Contract

- Extend parts and labor coverage for an additional year.
- Worry-free operation.
- Control service costs.
- Eliminate the need to generate repair orders.
- No unexpected repair costs.

Other contract options are available. Please contact ThermoNESLAB for more information.

After-sale Support

ThermoNESLAB is committed to customer service both during and after the sale. If you have questions concerning the operation of your unit or the information in this manual, contact our Sales Department. If your unit fails to operate properly or if you have questions concerning spare parts or Service Contracts, contact our Service Department.

Before calling, please refer to the serial number label on the rear of the controller to obtain the following information (see Section II, Description for the serial number label location):

- BOM number _____

- Serial number _____

Section I Safety

Warnings

Make sure you read and understand all instructions and safety precautions listed in this manual before installing or operating your unit. If you have any questions concerning the operation of your unit or the information in this manual, contact our Sales Department.

Performance of installation, operation, or maintenance procedures other than those described in this manual may result in a hazardous situation and may void the manufacturer's warranty.

Transport the unit with care. Sudden jolts or drops can damage the refrigeration lines.

Observe all warning labels.

Never remove warning labels.

Never operate damaged or leaking equipment.

Never operate the unit without bath fluid in the bath.

Never use pure ethylene glycol as a bath fluid. A minimum 80/20 mixture of Ethylene Glycol and tap water is allowed.

For 220 - 240 volt units supplied without a line cord, use a harmonized (HAR) grounded 3-conductor cord, type H 0 5 V V - F , with conductors listed below. A suitable cord end is required for connecting to the equipment (see unit socket) and must terminate with an IEC approved plug for proper connection to power supply.

NON-BOOST HEATER UNITS	**Nominal 1.0 mm^2 cross section rated 10 Amps**
	Unit Socket: IEC - 320 C13
BOOST HEATER UNITS	**Nominal 1.5 mm^2 cross section rated 16 Amps**
	Unit Socket: IEC - 320 C19

Always turn off the unit and disconnect the line cord from the power source before performing any service or maintenance procedures, or before moving the unit.

Always empty the bath before moving the unit.

Never operate equipment with damaged line cords.

Refer service and repairs to a qualified technician.

In addition to the safety warnings listed above, warnings are posted throughout the manual. These warnings are designated by an exclamation mark inside an equilateral triangle with text highlighted in bold print. Read and follow these important instructions. Failure to observe these instructions can result in permanent damage to the unit, significant property damage, personal injury or death.

Section II General Information

Description

The RTE-Series Refrigerated Bath/Circulators are designed to provide temperature control for applications requiring a fluid work area or pumping to an external system.

Units consists of a non-CFC air-cooled refrigeration system, circulation pump, seamless stainless steel bath, work area cover, and a temperature controller.

Specifications

	RTE-111	RTE-211	RTE-221
Temperature Range[1]	-25°C to +150°C		-23°C to +150°C
Temperature Stability[2,3,4]	±0.01°C		
Cooling Capacity[2,5]			
Watts	500		
BTU/H	1705		
Pump Capacity	15 lpm at 0' (0 M) 0 lpm at 16' (4.9 M)		
Heater			
Watts	800	800	800/800 boost
50 Hz Models	1000	1000	1000/800 boost
Bath Work Area			
(L x W x D)			
Inches	4 3/4 x 8 x 6	9 1/4 x 10 x 6	9 1/4 x 10 x 9
Centimeters	12.1 x 20.3 x 15.3	23.5 x 25.4 x 15.2	23.5 x 25.4 x 22.9
Bath Volume			
Gallons	1.9	3.2	5.4
Liters	7.0	12.3	20.5
Case Dimensions			
(H x W x D)			
Inches	25 x 10 5/16 x 15 7/8	25 x 12 3/8 x 18 3/8	27 7/8 x 12 3/8 x 18 3/8
Centimeters	63.5 x 26.2 x 40.3	63.5 x 31.4 x 46.7	70.8 x 31.4 x 46.7
Power Requirements[6]	115 V, 60 Hz, 12 Amp 220/240 V, 50 Hz, 7.5 Amp	115 V, 60 Hz, 12 Amp 220/240 V, 50 Hz, 7.5 Amp	115 V, 60 Hz, 16 Amp 220/240 V, 50 Hz, 10 Amp

1. Low end temperature for 50Hz units is -18°C, -23°C and -21°C respectively.
2. Specifications listed for units operating at +20°C bath temperature, +20°C (+70°F) ambient, with tap water as bath fluid.
3. For operation below 0°C, covering the bath work area may improve stability.
4. For some applications, agitation and stability above ambient may be may be improved by connecting a small length of hose between the pump connections on the rear of the unit.
5. 50 Hz RTE-111 units have a 375 watt cooling capacity.
6. Power Board Transformer Fuse–Analog T 0.5A 250V (Qty 1), Digital T 0.8A 250V (Qty 2) [T=Time Delay]

Section III Installation

Site

The indentations on the sides of the unit are designed to function as handles. Lift by the handles and locate it on a sturdy workarea. Ambient temperatures should be inside the range of +50°F to +80°F (+10°C to +27°C).



Never place the unit in a location where excessive heat, moisture, or corrosive materials are present.

The unit has an air-cooled refrigeration system. Air is drawn through the front panel and discharged through the rear panel. The unit must be positioned so the air intake and discharge are not impeded. A minimum clearance of 12 inches (30 centimeters) at the front and rear of the unit is necessary for adequate ventilation. Inadequate ventilation will reduce cooling capacity and, in extreme cases, can cause compressor failure.

Excessively dusty areas should be avoided and a periodic cleaning schedule should be instituted (see Section VI, Cleaning).

The unit will retain its full rated capacity in ambient temperatures up to approximately +75°F (+24°C). Reduce the cooling capacity 1% for every 1°F above +75°F, to a maximum ambient temperature of +95°F. In terms of °C, reduce the cooling capacity 1% for every 0.5°C above +24°C, to a maximum ambient temperature of +35°C.

Electrical Requirements



Line voltage may be easily accessible inside the pump/control box. Always unplug the unit prior to removing the pump/control box cover.

Refer to the serial number label on the rear of the unit to identify the specific electrical requirements of your unit.

Ensure the voltage of the power source meets the specified voltage, ±10%.

The unit construction provides extra protection against the risk of electric shock by grounding appropriate metal parts. The extra protection may not function unless the power cord is connected to a properly grounded outlet. It is the user's responsibility to assure a proper ground connection is provided.



For 220 - 240 volt units supplied without a line cord, use a harmonized (HAR) grounded 3-conductor cord, type H 0 5 V V - F , with conductors listed below. A suitable cord end is required for connecting to the equipment (see unit socket) and must terminate with an IEC approved plug for proper connection to power supply.

BOOST HEATER UNITS	**Nominal 1.5 mm² cross section rated 16 Amps** **Unit Socket: IEC - 320 C19**
NON-BOOST HEATER UNITS	**Nominal 1.0 mm² cross section rated 10 Amps** **Unit Socket: IEC - 320 C13**

Plumbing Requirements



Ensure the unit is off before connecting tubing to the unit.

To prevent damage to the plumbing lines, always support the ¾" fittings while installing/removing the pumping caps and lines.

Hose Connections

The pump connections are located at the rear of the pump box and are labelled PUMP INLET and PUMP OUTLET. These connections are bent upward so the recirculating fluid will drain back into the reservoir when the hoses are disconnected. Both connections are capped with stainless steel serrated plugs.

The pump lines have ¼ inch male pipe threads for mating with standard plumbing fittings. For your convenience stainless steel adapters, ¼ inch female pipe thread to 3/8 inch O.D. serrated fitting, are provided. (To assure proper fit, they should be installed using Teflon® tape around the threads.)

Flexible tubing, if used, should be of heavy wall or reinforced construction. Make sure all tubing connections are securely clamped. Avoid running tubing near radiators, hot water pipes, etc. If substantial lengths of tubing are necessary, insulation may be required to prevent loss of cooling capacity.

Tubing and insulation are available from ThermoNESLAB. Contact our Sales Department for more information (see Preface, After-sale Support).

It is important to keep the distance between the unit and the external system as short as possible, and to use the largest diameter tubing practical. Tubing should be straight and without bends. If diameter reductions must be made, make them at the inlet and outlet of the external system, not at the unit.

If substantial lengths of cooling lines are required, they should be pre-filled with bath fluid before connecting them to the unit. This will ensure that an adequate amount of fluid will be in the bath once it is in operation.

Pumping

The pump is designed to deliver a flow of 15 liters per minute (4 gallons per minute) at 0 feet head. To prevent external circulation, the PUMP INLET and PUMP OUTLET lines on the rear of the unit are capped. The caps must be removed when external circulation is required.

To properly secure external hose connections to the unit, wrap Teflon® tape around the pipe line threads before installation. Once the hose connections are made, the hoses must be properly plumbed to an external system. *It is important the bath is not in operation until all plumbing is complete.*

If the bath is not used for external circulation, make sure the stainless steel caps are in place prior to operating the bath.

Circulating to an open container

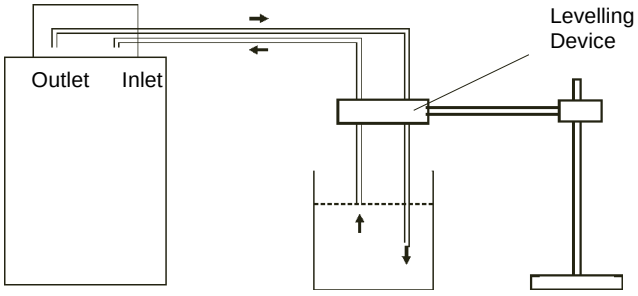

A stainless steel leveling device is available to aid circulation to an open vessel. Contact our Sales Department for more information (see Preface, After-sale Support).

Support the leveling device over the open container with a ringstand. Stagger the tubes in the leveling device so one tube is submerged in the vessel fluid, and the other tube is level with the fluid surface. Connect the deeper tube to the PUMP OUTLET and the shorter tube to the PUMP INLET.

Adjust the flow rate using the accessory flow control valve connected to the PUMP OUTLET, or by partially restricting the outlet tubing. When properly adjusted, the pump inlet will draw an occasional air bubble to prevent over flow, and the pump outlet will force fluid through the submerged tube to prevent aeration of the vessel.

To avoid siphoning the bath work area when the unit is shut off, lift the leveling device out of the vessel and above the level of the unit.

Circulating through two closed loops

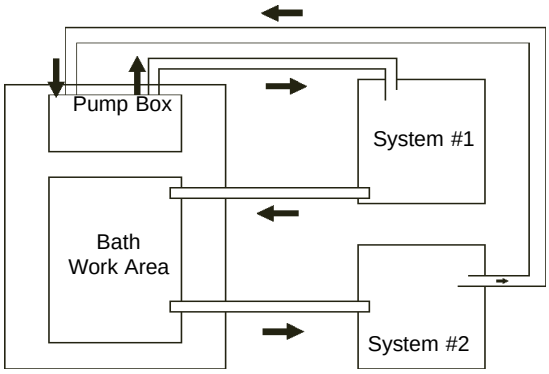

Bath (Top View)

The pump can be used to circulate through two closed loop systems. Connect the shortest practical length of flexible tubing from the PUMP OUTLET to the inlet of external system #1. Connect the outlet of system #1 directly into the bath work area. Connect tubing from the bath work area to the inlet of system #2. Connect the outlet of system #2 to the PUMP INLET.

Drain



Ensure the temperature of the bath fluid is safe before draining the unit.

The unit is equipped with a drain located at the back of the unit at the base of the bath. The drain has ¼ inch male pipe threads and is capped with a stainless steel plug. To drain the reservoir simply remove the cap.

To assure proper fit when replacing the cap, be sure to line the threads with Teflon tape.

Fluids



Never use flammable or corrosive fluids with this unit.

The selected fluid must have a viscosity of 50 centistokes or less at the lowest operating temperature.

Filtered tap water is the recommended fluid for operation from +8°C to +80°C.

For operation from +8°C to -30°C, a 50/50 mixture, by volume, of filtered tap water and laboratory grade ethylene glycol is suggested.

Above +80°C and below -30°C, the user is responsible for fluids used.



Never use pure ethylene glycol as a bath fluid. A minimum 80/20 mixture of Ethylene Glycol and tap water is allowed.

Filling Requirements

The bath work area has a high and low level marker to guide filling. The markers are 1 inch horizontal slits located in the center of the stainless steel baffle separating the work area and the pump assembly. The correct fluid level falls between these two markers. The heating and cooling coils will be exposed and may become damaged if the correct fluid level is not provided.

When pumping to an external system, keep extra fluid on hand to maintain the proper level in both the circulating lines and the external system.



Never run the unit when the work area is empty. Avoid overfilling. Overfilling the bath may damage the insulation and affects stability.

Section IV Microprocessor Controllers

Microprocessor Controller

Description

The microprocessor controller is designed as a separate component from the unit. The controller can be mounted directly on the pump box, or remotely from the bath. The controller provides proportional with integral and derivative (PID) control.

The controller has two sections. The upper section contains the LED indicators and the Main display which provide feedback to you about the controller and bath. The ten individual LED indicators provide output on selected parameters while the Main display will provide information on various unit conditions. The lower section contains the keypad you use to input data to the controller.

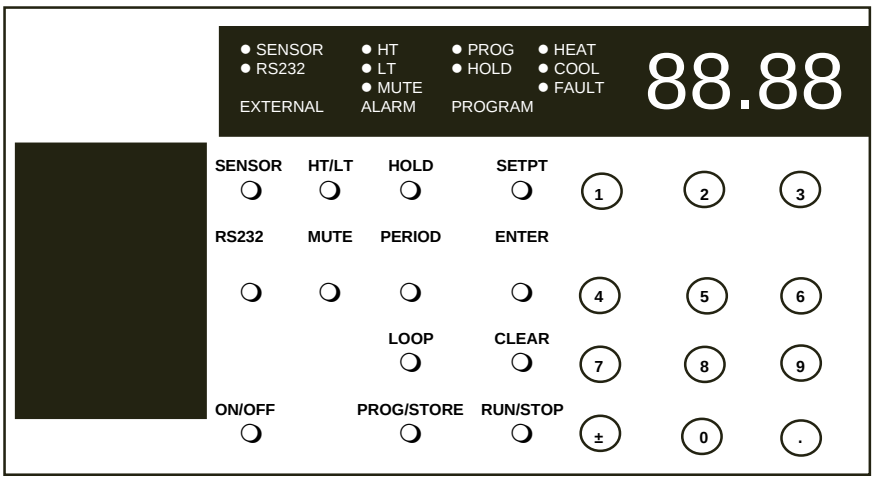

Microprocessor Temperature Controller (Front View)

Controller Mounting

The controller can be removed from the bath and placed in a remote location. Extension cables are available from ThermoNESLAB. Contact our Sales Department for more information.

Controller Connection

Microprocessor controllers are supplied with a cable needed to connect the controller to the pump box. Connect the cable to the 25-pin male connector on the control box and the female connector on the pump box. Once the connection is made, the unit is ready for operation.

NOTE: The MAIN POWER should be OFF before connecting/disconnecting cables from the control box.

LED Indicators

The following table explains the controller LED indicators. The LEDs can be on, off or flashing.

LED	STATUS	INDICATION
SENSOR	OFF	All controller functions are operating from the unit's internal probe.
	ON	All controller functions are operating from remote sensor input.
	FLASHING	The Main display indicates the remote sensor temperature. The controller, however, still uses the internal probe to control the bath temperature.
RS232	OFF	Communication port disabled.
	ON	Communication port enabled.
	FLASHING	Awaiting next key press
LT	OFF	No alarm.
	ON	Main display indicates low limit setpoint.
	FLASHING	Low limit alarm condition.
HT	OFF	No alarm.
	ON	Main display indicates high limit setpoint.
	FLASHING	High limit alarm condition.
HOLD	OFF	Programming hold feature disabled.
	ON	Programming hold feature enabled.
PROG	OFF	No program running.
	ON	The program is suspended[1].
	FLASHING	The program is running.
COOL	OFF	Refrigeration is off[2].
	ON	Refrigeration is on.
HEAT	OFF	The heater is off.
	ON	The heater is on.
	FLASHING	The heater duty cycle.
MUTE	OFF	The alarm is enabled.
	ON	The alarm horn is disabled.
	FLASHING	The alarm horn has been disabled for any current condition. The alarm horn will automatically reset when the condition is cleared.
FAULT	OFF	No fault condition.
	ON	The high temperature/low level safety has activated.

1. The bath fluid will maintain the setpoint achieved at the time the program is suspended, except when the bath is in a rapid cool segment. No operator inputs are available to the controller while in a suspended condition.
2. Below 40°C the refrigeration is on unless the setpoint is more than 2°C above the bath temperature. This allows rapid heat up. Above 40°C refrigeration is off unless the setpoint is more than 2°C below the bath temperature. This allows rapid cool down.

Start Up

Before starting the unit, check all electrical and plumbing connections and make sure the work area has been properly filled with bath fluid.

NOTE: The fluid level should be between the two lateral slots at the rear of the reservoir.

To power the controller on 115V units, place the MAIN POWER switch on the side of the unit to the ON position. This only supplies power to the controller. *The unit itself is not operating.* The Main display on the controller will display OFF.

220V units have a circuit breaker instead of a switch. The circuit breaker is labeled **I** (power on) and **O** (power off). Ensure the circuit breaker is in the **I** position.

Press the keypad ON/OFF button on the controller. The pump will start and the Main display will indicate the temperature of the fluid in the bath. The controller will respond to the current setpoint.

Pressing the keypad ON/OFF button again will disable control of the bath and shut down the pump. The Main displayindicates OFF. (When the controller is in the RS232 mode of operation, see page 13, the ON/OFF button is deactivated. Control of the bath can only be disabled via an RS232 input.)

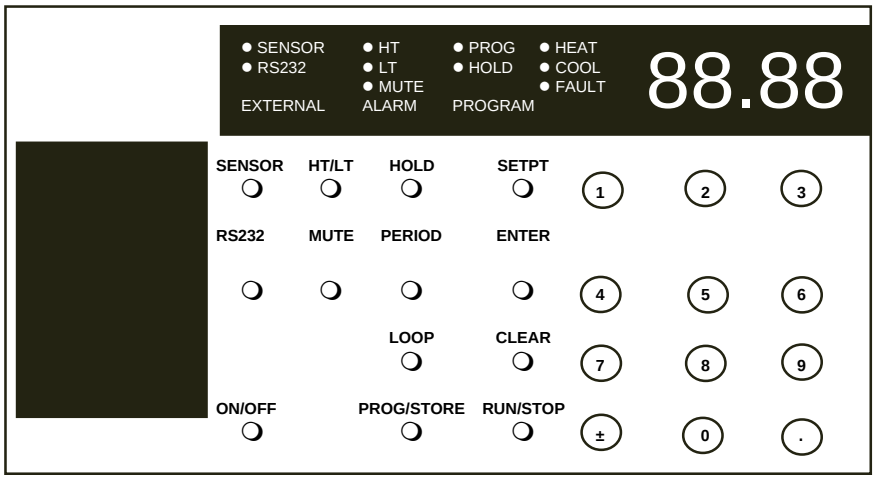

Microprocessor Temperature Controller (Front View)

Temperature Adjustment

To display the temperature setpoint, press SETPT. The Main display will flash the current setpoint. Press ENTER to return the display to the bath's fluid temperature. To adjust the setpoint press SETPT and then press CLEAR, the display will go blank. Use the keypad to input the desired value. If the value is correct press ENTER. If the value is incorrect press CLEAR, the display will go blank. Use the keypad to correct the value and press ENTER.

Low and High Temperature Limits

To display the temperature limits, press HT/LT. Either the HT or LT LED will illuminate and the Main display will flash the corresponding temperature limit. Press ENTER and then press HT/LT again to observe the other temperature limit. The corresponding LED on the controller will illuminate. Should either limit be exceeded an alarm will sound (if not muted) and the corresponding LED will flash.

To adjust either limit, press HT/LT and then press CLEAR, the display will go blank. Use the keypad to input the desired value. If the value is correct press ENTER. If the value is incorrect press CLEAR, the display will go blank. Use the keypad to correct the value and press ENTER. Use the LT or HT LED indicators to verify which temperature limit you are changing.

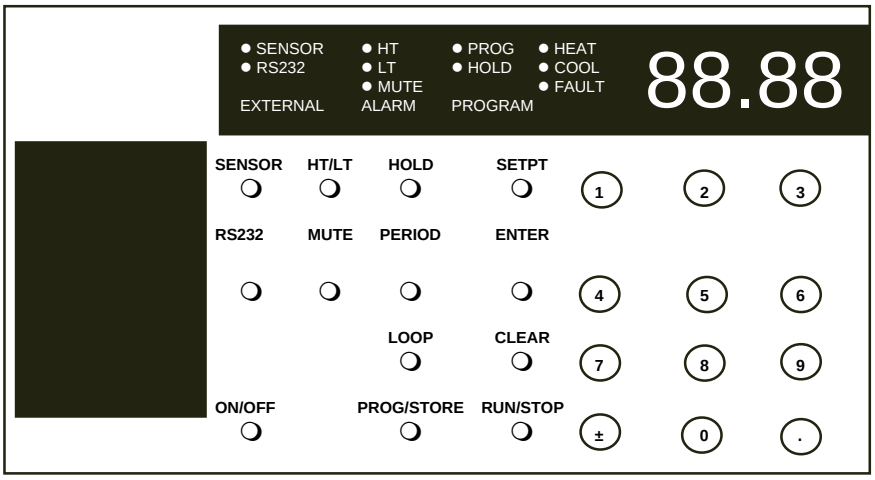

Microprocessor Temperature Controller (Front View)

Alarm/External Functions

Mute Alarm

The alarm audio may be permanently silenced by pressing MUTE, and then immediately (within one second) pressing HOLD. The MUTE LED will now stay lit. To restore the audio, press MUTE and then immediately (within one second) press CLEAR. The MUTE LED will extinguish.

If desired, you may mute the audible portion of an alarm for an existing condition. Press MUTE on the temperature controller. The MUTE LED flashes to indicate a muted alarm horn. The MUTE button acts as a toggle switch to activate/deactivate the alarm horn. The appropriate HT or LT LED will continue to flash during the alarm condition. If the alarm is muted for an existing condition it will automatically reset once the temperature limit problem is corrected. The alarm will resound if a limit is exceeded another time unless MUTE is pressed again.

Sensor

The controller has the capability to enable and/or monitor a remote bath's temperature sensor. (Remote sensor probes of various sizes are available from ThermoNESLAB. Contact our Sales Department for more information.) Pressing SENSOR, when a remote sensor is properly connected to the controller's 9-pin SENSOR connector, will display the remote sensor's temperature on the Main display. The SENSOR LED will flash. *The controller and alarm, however, will continue to respond to the signals from the unit's internal probe.*

To completely transfer all display, control and alarm functions to the remote sensor, press SENSOR and then press ENTER. The SENSOR LED will stay lit. The controller will not respond to the signal from the unit's internal probe.

To disable the remote sensor press SENSOR and then press CLEAR. The SENSOR LED will extinguish. All display and alarm functions will again respond to the signal from the unit's internal probe.

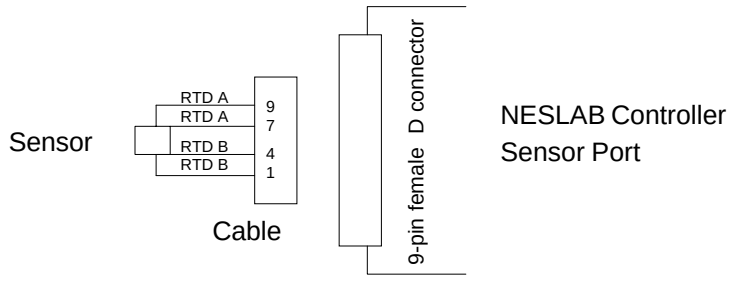

RS232

The unit can be controlled through your computer's serial port by using a standard 9-pin RS232 connection on the rear of the temperature controller. For complete information see Appendix A.

Program Functions

Programming

The microprocessor controller can store up to 8 temperature programs, each one having up to 15 program steps (16 setpoints). You can select, enter or run one program at a time. The procedure for selecting a program is discusssed in Program Control on page 16. The programs can cover the unit's full temperature operating range in 0.01°C increments. Step times can vary from 0.1 to 6,500 minutes in 0.1 minute increments. Each program can be set up to run as many as 9999 repetitions (LOOPS).

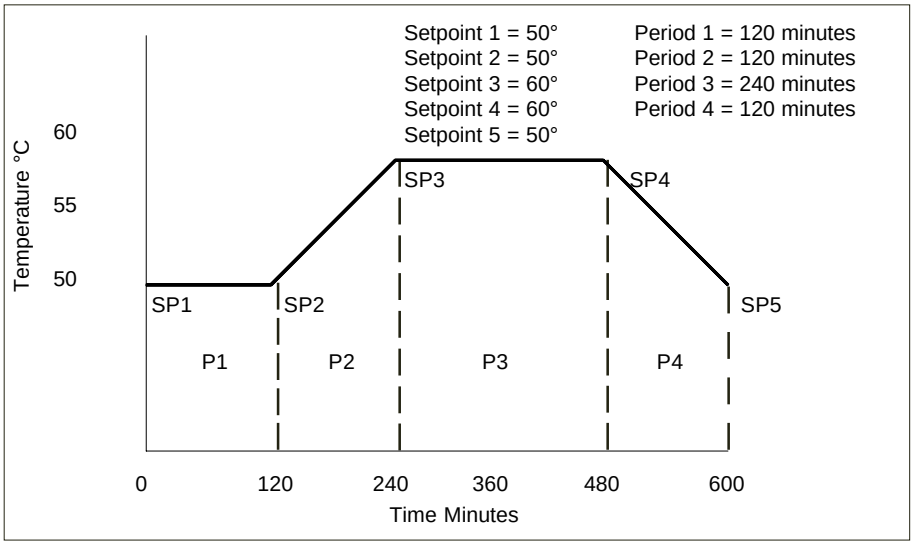

Typical Program

The controller can store all programs in its nonvolatile memory, see Program Control on page 16.

Programming begins with program definition. Define your program as a series of setpoints with a known period of time interval between each. Each interval is one step of the program. Pay careful attention to the first part of your program. What conditions must exist at the beginning of your process? For example, at the starting setpoint you may wish to program an initial period of constant temperature to allow for thermal stabilization.

When a program is started, it begins immediately at the initial program setpoint.

Consider the unit's limitations when designing programs. Temperature or time parameters which exceed the performance capabilities of the bath will result in unsatisfactory operation. It is possible to create a program calling for very rapid changes in temperature. Although the equipment may not be capable of producing such changes, it may be practical to program such steps as a way to cause the fastest *possible* temperature change.

NOTE: Below 40°C the refrigeration is on unless the setpoint is more than 2°C above the bath temperature. This allows rapid heat up. Above 40°C refrigeration is off unless the setpoint is more than 2°C below the bath temperature. This allows rapid cool down.

Loops

This option allows for automatic repetition(s) of a program. For example, set the number of loops to three. Once the program reaches the last setpoint, it will loop back to the first setpoint and run the program again. In this instance the program will loop back three times. The entire program will run a total of four times. The maximum number of loops is 9999.

Hold

This option determines what will happen at the end of a program. In the hold mode of operation the setpoint will remain at the final temperature when the program is completed. Without hold the setpoint will return to the starting setpoint when the program is completed. The setpoint may change abruptly, but the fluid temperature will respond as quickly as the system's heating and cooling capacity allows.

The procedures for placing the controller in the hold mode is discussed in Program Control on page 17.

Current Values

While a program is running, the program selected, current period, current setpoint, time remaining for the current step, or the current loop, may be viewed on the Main display. Momentarily depress the appropriate key listed below to view the desired parameter. After several seconds, the Main display will again indicate the temperature of the bath fluid.

SETPT	View Current Setpoint
LOOP	View Current Loop
PERIOD	Time Remaining in Current Period
PERIOD PERIOD	Current Period Number
+/- followed immediately by **PROG/STORE**	Selected Program Number

Assured Soak

This option is used when you need to ensure the bath temperature will reach the next setpoint (regardless of time) before moving onto the next period.

This option is controlled by a DIP switch on the rear of the controller. Turn DIP switch number seven (7) to the ON position to enable this feature.

Period Adjust

This option is used to skip the current period of a running program. See Table 13 on page 19 for the appropriate procedure. **NOTE:** If Assured Soak is activated, the bath *must* reach that setpoint before the program will continue.

Rapid Cool

This option is used to enable maximum cooling operation. This option is available with or without a program running. **NOTE:** The unit is normally in a maximum cooling mode when the bath temperature is below 28°C.

When not running a program, if you enter a setpoint greater than 2°C colder than the current bath temperature, maximum cooling will be enabled until the setpoint is reached.

For programming, determine which program period(s) will require maximum cooling. Then instead of entering a time for those periods, press the " **-** **+** " button on the keypad. The Main display will indicate FASt verifying a rapid cool down period has been entered. When the appropriate program period is executed, maximum cooling will be enabled until the setpoint is reached.

Program Control

The following tables show how to use the keypad and Main display to program the controller.

Use Table 1 to select one of the eight programs to be the current program for either entering or running.

TABLE 1

Keypad input	Main Display	Comments
+/-	Current bath temperature	
-PROG/STORE[1]	**Pro** followed by the program number	Enter desired program number.
-ENTER	Current bath temperature	

1. PROG/STORE must be depressed immediately (within one second) after +/-.

Once Table 1 is complete, use Table 2 for entering and storing a two-setpoint program. You would follow this procedure for programming any number of setpoints (up to the 16 setpoint maximum).

NOTE: The number of setpoints must be one greater than the number of periods or you will get an error message.

TABLE 2

Keypad input	Main Display	Comments
-PROG/STORE	**- - - - - -**	If YES appears you should clear the current program (see Table 10).
-SETPT	**SP-1**	Input setpoint.
-ENTER	Desired setpoint	
-PERIOD	**P-1**	Input time in minutes.
-ENTER	Desired time	
-SETPT	**SP-2**	Input setpoint.
-ENTER	Desired setpoint	
-LOOPS	**LOOPS**	Input number of loops
-ENTER	Desired number of loops	
-PROG/STORE	**FILE?**	
-ENTER	Current bath temperature	

Use Table 3 to abort programming at any time.

TABLE 3

Keypad input	Main Display	Comments
-ENTER	**- - - - -**	
-PROG/STORE	**FILE?**	
-CLEAR	Current bath temperature	

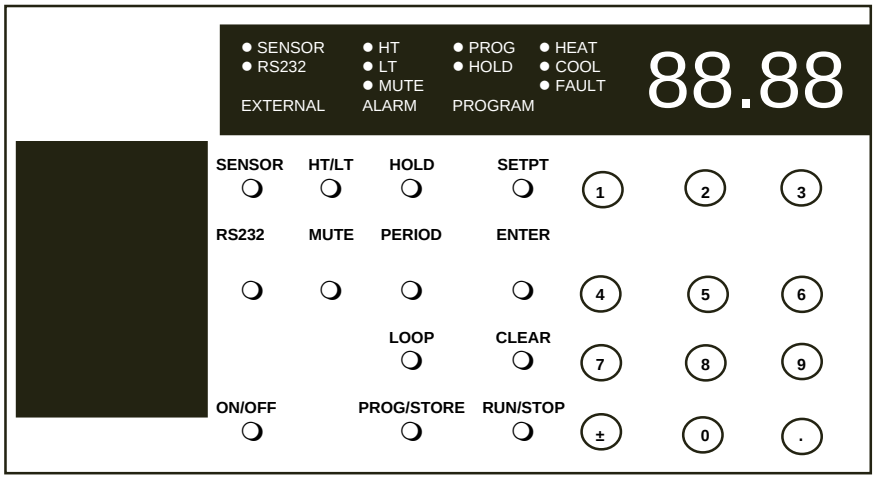

Microprocessor Temperature Controller (Front View)

Use Table 4 to scroll through a two-setpoint stored program. You would use this procedure for scrolling any number of setpoints (up to the 16 setpoint maximum).

TABLE 4

Keypad input	Main Display	Comments
-PROG/STORE	**YES**	
-ENTER	**SP-1** followed by actual value	
-ENTER	**SP-2** followed by actual value	
-ENTER	**P-1** followed by actual value	
-ENTER	**LOOPS** followed by actual value	
-ENTER	Current bath temperature	

Use Table 5 to abort scrolling through a program at any time.

TABLE 5

Keypad input	Main Display	Comments
-PROG/STORE	**FILE?**	
-ENTER	Current bath temperature	

Once Tables 1 and 2 are complete, use Table 6 to run a stored program.

TABLE 6

Keypad input	Main Display	Comments
-RUN/STOP	Current bath temperature	**PROG LED** will flash.

Use Table 7 to stop a running program.

TABLE 7

Keypad input	Main Display	Comments
-RUN/STOP	Current bath temperature	**PROG LED** will stay on steady.
-CLEAR	Current bath temperature	**PROG LED** extinguishes.

Use Table 8 to temporarily suspend a running program.

TABLE 8

Keypad input	Main Display	Comments
-RUN/STOP	Current bath temperature	**PROG LED** stays on steady.

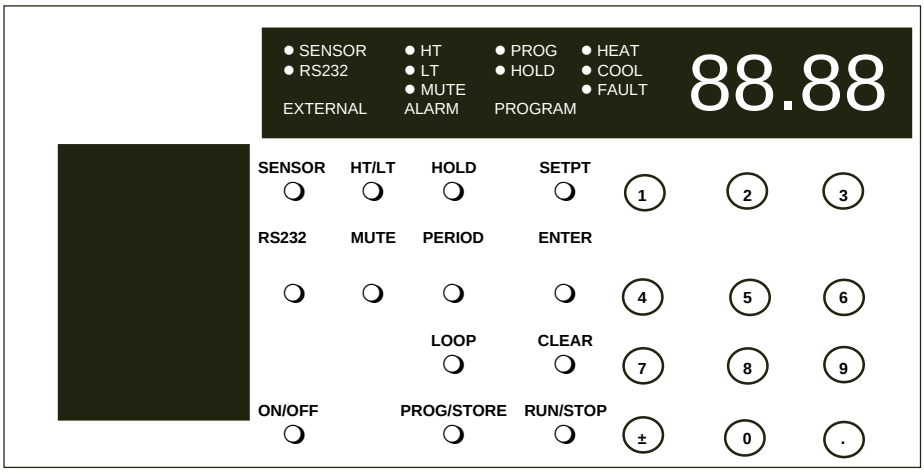

Microprocessor Temperature Controller (Front View)

Use Table 9 to resume a suspended program.

TABLE 9

Keypad input	Main Display	Comments
-RUN/STOP	Current bath temperature	**PROG LED** flashes.

Use Table 10 to clear a stored program.

TABLE 10

Keypad input	Main Display	Comments
-PROG/STORE	**YES**	
-PROG/STORE	**FILE?**	
-CLEAR	Current bath temperature	

Use Table 11 to add HOLD operation. (Hold must be established before running a program. The hold function is not part of the stored program.)

TABLE 11

Keypad input	Main Display	Comments
-PROG/STORE	**YES**	
-HOLD	**YES**	**HOLD** LED stays on steady.
-PROG/STORE	**FILE?**	
-ENTER	Current bath temperature	

Use Table 12 to clear hold operation.

TABLE 12

Keypad input	Main Display	Comments
-PROG/STORE	**YES**	
-HOLD	**YES**	**HOLD** LED extinguishes.
-PROG/STORE	**FILE?**	
-ENTER	Current bath temperature	

Use Table 13 to force a running program to skip ahead to the next period.

TABLE 13

Keypad input	Main Display	Comments
+/-	Current bath temperature	
-PERIOD[1]	**P-Adj**	(Period adjust)

1. PERIOD must be depressed immediately (within one second) after +/-.

Error Messages

The Main LED will indicate an error message for eight different conditions.

Error1 - Program incomplete or illogical. Re-enter the program.

Error2 - Period entered exceeds 6,500 minutes. Reenter a period.

Error3 - Entered value exceeds allowable limits. Reenter proper value.

Error4 - Loops entered greater than 9,999. Reenter loops

Error5 - Attempted to run a program without a program in memory. Build a program.

Error6 - No period or 0 entered for a program period. Enter a period.

Error7 - With alarm - SENSOR depressed without a sensor properly connected to controller. Properly connect a sensor. (If sensor is properly connected the sensor may have failed.) Without alarm - Internal probe failure, unit will shut off.

Error8 - Internal nonvolatile memory has failed. Press ENTER for the controller to reinitialize nonvolatile memory to factory preset parameters. **NOTE:** This will erase any program and setpoints in nonvolatile memory. The unit will have to be recalibrated.

Miscellaneous

Additional Parameters

Two parameters can also be set while the controller is deactivated (Main display shows OFF). You can adjust the light intensity of the Main display and set the controller pushbuttons to "beep" or not when depressed.

To adjust the Main display intensity first press the "±" key on the controller keyboard. Repeatedly depress the "1" key to decrease intensity or the "3" key to increase. Each press changes the intensity an incremental amount. Once the desired intensity is displayed press ENTER.

To silence the "beep" first press the "." key. Press "0" to turn the beep off or press "1" to turn it on. Next, press ENTER.

DIP Switches

Three DIP switches on the rear of the controller are operational. Switch #1 controls the temperature scale. OFF (up position) displays the temperature in °C, ON (down position) displays the temperature in °F.

Switch #6 sets the display update rate the controller uses to display temperature. This will determine how sensitive the display will be to temperature fluctuations. OFF (up position) sets a fast rate, ON (down position) sets a slow rate. (OFF causes more fluctuations than ON.)

Switch #7 controls the assured soak option for programs. ON (down position) enables assured soak.

PID Control

PID controllers are best suited for systems that may experience changing heat loads. Proportional control is combined with Integral and Derivative adjustments which allow the controller to automatically compensate for any changes from the setpoint. You may have to experiment with the PID settings to find out which are most suitable to your application.

To change or view any of the PID settings the controller must be operating.

To change or view the proportional band, press "1" and immediately, within one second, press ENTER. The "percent of span" value will flash on the Main display. Press ENTER to accept the value. To change the value press CLEAR and then enter the desired value. Press ENTER to exit this mode.

To change or view the Integral, press "2" and and immediately, within one second, press ENTER. The "repeats per minute" value will flash on the Main display. Press ENTER to accept the value. To change the value press CLEAR and then enter the desired value. Press ENTER to exit this mode.

To change or view the Derivative, press "3" and and immediately, within one second, press ENTER. The "minutes" value will flash on the screen. Press ENTER to accept the value. To change the value press CLEAR and then enter the desired value. Press ENTER to exit this mode.

Restoring Factory Preset Values

To restore the factory preset values hold the "0" button on the keypad and turn the Main Power switch on the side of the unit to the ON position. Release the "0" button and the Main display will indicate OFF. The following preset values will be installed:

P = 0.6%
I = 0.25 repeats per minute
D = 0.05 minutes

In addition, the following values will be preset

BAUD Rate	= 9600
Stop bits	= 1
Data Bits	= 8
Parity	= none

MIN Power Mode

If desired, you can trade off bath cooling speed for increased temperature stability. You do this by placing the refrigeration system in a minimum power mode. **NOTE:** Above 50°C (122°F), better stability is achieved with the bath cover removed.

To place the unit in this mode press "5" followed immediately (within one second) by ENTER. The decimal point to the right of the Main display's °C or °F will flash. To exit and resume normal operation, press "5" followed immediately (within one second) by CLEAR.

Calibration

The microprocessor controller has three different modes of calibration: Self-Cal, Two-point, and One-point. The controller is shipped from the factory with a Two-point calibration so no additional controller calibration may be required. Both the internal probe and the remote sensor input must be independently calibrated. Different calibration modes for each probe can be used if desired. The remote sensor input has been Self-Calibrated at the factory.

Self-Cal is used to initialize the analog-to-digital (A/D) converter input channel before performing the other types of calibrations. This mode removes all previous calibrations and brings the measurement error to less than 2°C. If this is the required accuracy, then no additional calibration is needed.

Two-point calibration is used to negate A/D and probe errors over the full span of the controller. This type of calibration is performed when high accuracy is desired.

One-point calibration (offset) is used to make the controller very accurate at one specific operating temperature.

One-point Calibration can be performed after a Two-point calibration as many times as desired. Each One-point calibration adds a different offset to the original Two-point calibration data (if one was already performed).

Calibration Procedures

Note: The controller should be powered at least 15 minutes before calibration to assure the electronic circuits are at operating temperature. To perform One and Two-point calibrations on the remote sensor input the unit must be in the remote sensor mode. Messages will end with CAL 1 for internal probe calibrations and CAL 2 for remote sensor calibrations.

Self-Cal: The controller must be deactivated (displaying OFF) to access this mode. Press SETPT followed by ENTER to Self-Cal the internal probe input. The message “S-CAL 1” will be followed by “done”. To Self-CAL the sensor input press SENSOR followed by ENTER. The message “S-CAL 2” followed by “done” will be displayed.

Two-point: For high accuracy measurements the controller input can be calibrated at two points. These two points (one high, one low) should be as far apart as practical for good performance.



Do not pick points that are outside the safe operating limits of the fluid in your application. For example with a water bath, 5°C and 90°C would be typical calibration points.

Before a Two-point cal, Self-cal must be performed on the desired sensor input.

With the controller on and measuring from the internal or remote probe, depending on which sensor is being calibrated, set the controller setpoint to the desired high cal temperature. When the bath reaches the setpoint and stabilizes, measure the actual bath temperature with an external calibrated thermometer. Press in quick succession “2” “.” “ENTER”. The message H-CAL # will appear followed by the flashing setpoint. Now enter in the actual bath temperature as measured by the calibrated thermometer and press ENTER. The Main display will indicate the temperature of the bath fluid (the calibrated temperature will not appear until the next step is complete).

Next set the controller setpoint to the desired low cal temperature. When the bath reaches this setpoint and stabilizes, measure the actual bath temperature with an external calibrated thermometer. Press in quick succession “2” “.” “ENTER”. The message L-CAL # will appear followed by the flashing setpoint. Now enter in the actual bath temperature as measured by the calibrated thermometer and press ENTER. The Main display will now indicate the calibrated temperature of the fluid in the bath.

One-point: Before a One-point cal, Self-cal or Two-point cal must be performed on the desired sensor.

With the controller on, and measuring from the internal or remote probe, depending on which sensor is being calibrated, set the controller setpoint to the desired temperature. When the bath reaches this setpoint and stabilizes, measure the actual bath temperature with an external calibrated thermometer. Press in quick succession “1” “.” “ENTER”. The message 1-CAL # will appear followed by the flashing setpoint. Now enter in the actual bath temperature as measured by the calibrated thermometer and press ENTER. The display will now show the calibrated temperature and all temperatures will have this offset added to them.

Calibration clear: At any point the calibration data from a One or Two-point cal can be erased by quickly pressing “2” “.” “CLEAR”. This procedure clears the calibration data only for the selected probe.

High Temperature/ Low Liquid Level Safety

To protect your application, the adjustable High Temperature/Low Liquid Level Safety (HIGH TEMP/LOW LEVEL) ensures the heater will not exceed temperatures which can cause serious damage to your unit. A single temperature sensor, located on the heater coils in the bath, monitors both conditions. A High Temperature/Low Liquid Level fault occurs when the temperature of the sensor exceeds the set temperature limit.

In the event of a fault, the unit will shut down. The cause of the fault must be identified and corrected before the unit can be restarted.

The safety on single heater systems is not preset and must be adjusted during initial installation or if the unit is moved. Units with a boost heater have an additional nonadjustable safety located behind the main safety. It has a red reset button but no adjustment knob.

To set the safety, locate the HIGH TEMP/LOW LEVEL SAFETY adjustment dial on the right side of the pump box. Turn the dial fully clockwise and press the red RESET switch. The RESET switch is located next to the adjustment dial. **NOTE**: For units without a reset switch turn the power switch off then back on.

Start the unit. Adjust the setpoint for a few degrees higher than the highest desired fluid temperature and allow the bath to stabilize at the temperature setpoint. Turn the HIGH TEMP/LOW LEVEL SAFETY dial counter-clockwise until you hear a click and the unit shuts down. The red FAULT LED on the temperature controller will light to indicate a fault has occurred.

Cool the bath and then, without moving the adjustment dial, press the red RESET switch or turn the power switch off then back on.

NOTE: For units with a reset switch, the minimum high temperature safety setting is 50°C. For units without a reset switch the safety has a temperature range of 0°C to 180°C.

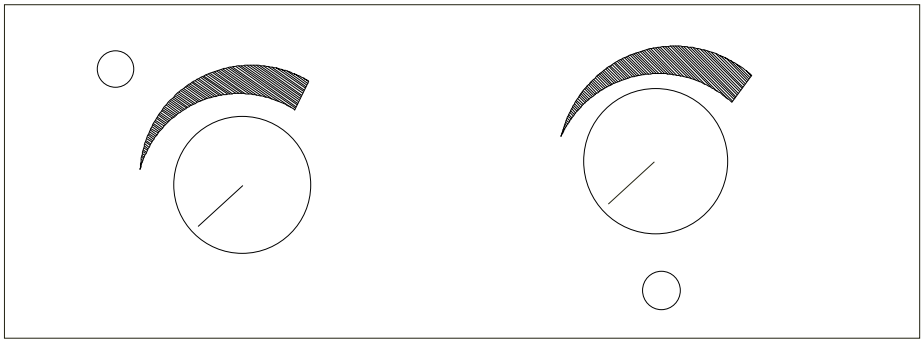

High Temperature/Low Liquid Level Safety
(Some units do not have a reset switch)

Section V Maintenance

To avoid electrical shock, disconnect the mains cord prior to removing any access panels or covers.

Service Contracts

ThermoNESLAB offers on-site Service Contracts that are designed to provide extended life and minimal down-time for your unit. For more information, contact our Service Department (see Preface, After-sale Support).

Condenser

For proper operation, the unit needs to pull substantial amounts of air through a condenser. A build up of dust or debris on the fins of the condenser will lead to a loss of cooling capacity.

Periodic vacuuming of the condenser is necessary. To access the condenser the front grille must be removed.

The unit must be turned off before the front panel is removed.

RTE-111's have a one-piece grille assembly. Simply pull forward to remove.

RTE-211 and RTE-221 units have a two piece grille assembly. First remove the left (blue-colored) section by simply pulling it forward. Pull forward on the remaining (white-colored) section to remove it.

The frequency of cleaning depends on the operating environment. After initial installation, we recommend a monthly visual inspection of the condenser. After several months, the frequency of cleaning will be established.

Reservoir Cleaning

Routine cleaning can be achieved by simply sponging down the seamless stainless steel tank with tap water. (Dish washing detergent may be used but the tank must be thoroughly rinsed.)

To gain access to the entire reservoir the pump box and reservoir cover should be removed.

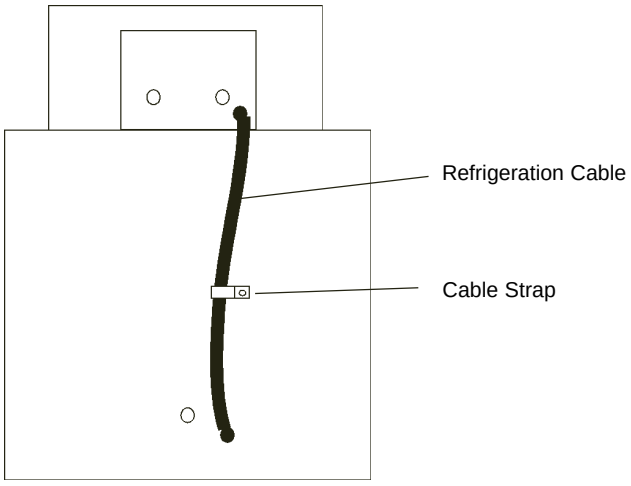

Remove the line cord from the rear of the unit and then remove the four screws (two on each side) securing the reservoir's cover.

To get slack on the refrigeration cable, remove the cable strap. The cable itself does not need to be disconnected.

Turn the cover assembly over and carefully place it on a supporting platform.

Algae

To restrict the growth of algae in the bath, we recommend the bath cover be kept in place and that all circulation lines be opaque. This will eliminate the entrance of light required for the growth of most common algae.

ThermoNESLAB recommends the use of Chloramine-T, 1 gram per 3.5 liters.

Section VI Troubleshooting

Checklist

Unit will not start

Make sure the voltage of the power source meets the specified voltage, ±10%. Refer to the serial number label on the rear of the unit to identify the specific electrical requirements of your unit.

Check the High Temperature/Low Liquid Level Safety. If the FAULT light is on, make sure the fluid level in the bath is between the marks in the baffle and the HIGH TEMP/LOW LEVEL SAFETY setting is greater than the fluid temperature. Push the RESET switch(es) or, for units without a reset switch, turn the power switch off then back on and attempt to restart.

Loss of cooling capacity

Be sure the cooling capacity of the unit has not been exceeded if circulating to an external system.

When the unit is shut off, wait approximately five minutes before restarting. This allows time for the refrigeration pressures to equalize. If the pressures are not allowed to equalize, the compressor will short-cycle (clicking sound) and no cooling will occur.

Proper ventilation is required for heat removal. Make sure ventilation through the front and rear panels is not impeded and the panels are free of dust and debris.

Ice build up on the cooling coils can act as insulation and lower the cooling capacity. Raise the temperature of the bath to de-ice the cooling coil and increase the concentration of non-freezing fluid.

No external circulation

Make sure the stainless steel plugs on the PUMP INLET and PUMP OUTLET have been removed.

Check for obstructions, kinks, or leaks in the circulation tubing.

Circulation will cease when the pump head has been exceeded.

Continued on next page.

No communication between bath's microprocessor and your computer
Ensure the bath's microprocessor parameters (baud rate, parity etc.) match your computer requirements.

Ensure the RS-232 light is on steady. See page 12 for details. **NOTE:** You cannot input data from the keypad when the RS-232 mode is enabled.

Check the cable. The microprocessor reads data on pin 2 and transmit data on pin 3. Ensure the cable is correctly connected. Computer 25-pin and 9-pin communication ports usually have different conventions.

Ensure the only pins connected to the microprocessor are 2, 3 and 5. All other pins must *not* be connected.

Keypad locked up
NOTE: When communications is enabled, or a program is running, data entry and many keypad functions are disabled. This is normal operaion.

If necessary, remove computer cable. Turn off the bath using the main power switch on the side of the unit. While holding the "0" button on the keypad, turn the unit back on. The Main Display will read OFF.

This will also restore the factory preset PID values and also reset the communication parameters and buffer. See Restoring Factory Preset Values on page 21.

Service Assistance and Technical Support

If, after following these troubleshooting steps, your unit fails to operate properly, contact our Customer Service Department for assistance (see Preface, After-sale Support). Before calling, please obtain the following information:

Part number
Serial number
Voltage of unit
Voltage of power source

In addition to arranging warranty service, our Service Department can provide you with a wiring diagram and a complete list of spare parts for your unit. Before calling, please obtain the following information:

Part number
Serial number

Appendix A — RS232

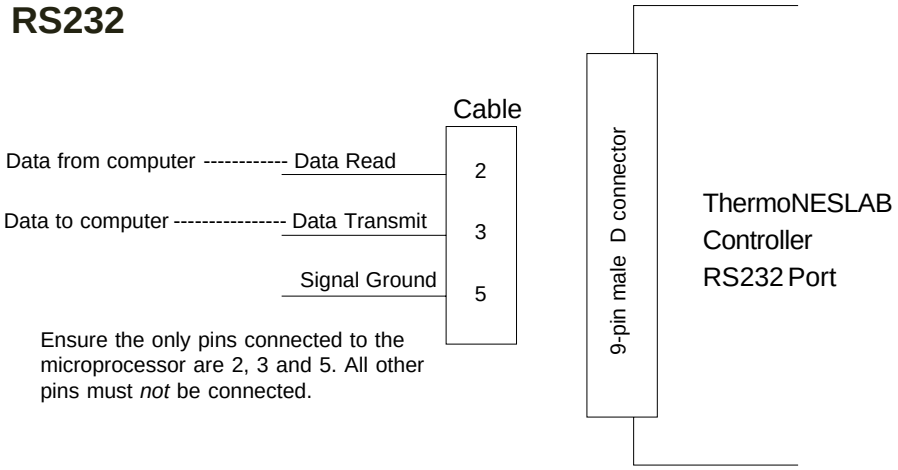

The unit can be controlled through your computer's serial port by using a standard 9-pin RS232 connection on the rear of the temperature controller. Data transmit of the serial port connects to data read (pin 2) of the bath. Data read of the serial port connects to the data transmit (pin 3) of the bath.

NOTE: Do not use a cable that connects to the unused pins on the bath communications port. This may cause a communication fault. Communication cables are available from ThermoNESLAB. Contact our sales department for additional information.

With a cable properly connected to the controller press RS232, the RS232 LED will start to flash. Press ENTER while the LED is flashing and the RS232 LED will come on steady indicating your computer's serial port can control the unit's operation.

In this mode of operation you cannot manually input data with the keypad. You can, however, observe the setpoint and/or alarm temperature limits by pressing the appropriate button on the controller. Your computer can be used to operate all modes of operation.

NOTE: When serial communications is enabled, and a temperature program is running, no keypad functions are allowed.

Communication Commands

All commands must be entered in the exact format shown in the following four tables. Do not send a [LF] (line feed) after the [CR]. Ensure the specified letter case is used. The tables on the next few pages show all commands available, their format and responses. Controller responses are either the requested data, an exclamation point (!) if the command was properly executed, or a question mark (?) if the controller could not execute the command. A question mark response indicates either an improper command format or an attempt to enter settings that are outside the allowable range. The controller response *must* be received before sending the next command.

NOTE: All responses from the bath are terminated with a single [CR] only. Wait for your computer to respond before sending the next command.

TABLE 1 GENERAL COMMANDS

Command Echo Echo: i = 1, No echo: i = 0 (control returns commands)	SEi[CR]
Set Setpoint -30.00 to +150.00°C or -22.00 to +300.00°F	SSxxx.xx[CR]
Read Setpoint	RS[CR]
Read Main Probe Temperature	RT[CR]
Read Remote Probe Temperature	RR[CR]
Turn Control On or Off On: i = 1, Off: i = 0	SOi[CR]
Set Power Status Flag Set: i = 1, Reset i = 0 (reset when controller power is lost)	SWi[CR]
Read Power Status Flag	RW[CR]
Read F or C Units	RU[CR]

TABLE 2 ALARM COMMANDS

Set High Alarm Limit Same range as setpoint	SHxxx.xx[CR]
Read High Alarm Limit	RH[CR]
Set Low Alarm Limit Same range as setpoint	SLxxx.xx[CR]
Read Low Alarm Limit	RL[CR]
Read Alarm Status Returns: 0 = no alarm, 1 = alarm	RF[CR]

TABLE 3 CONTROL COMMANDS

Set Proportional Bandwidth 0.10 to 10.00 % of full scale	SPxx.xx[CR]
Read Proportional Bandwidth	RP[CR]
Set Integral Compensation 0.00 to 10.00 repeats/minute	SIxx.xx[CR]
Read Integral Compensation	RI[CR]
Set Derivative Compensation 0.00 to 1.00 minutes	SDx.xx[CR]
Read Derivative Compensation	Rd[CR]
Main/Remote Probe Selection Main: i = 0, Remote: i = 1	Sri[CR]
Compressor Inhibit Inhibit: i = 0, Enable: i = 1	SCi[CR]

TABLE 3 CONTROL COMMANDS (Continued)

Boost Heater Inhibit Inhibit: i = 0, Enable: i = 1	SBi[CR]
Max Mode Inhibit Inhibit: i = 0, Enable: i = 1	SMi[CR]

TABLE 4 PROGRAMMING COMMANDS

Set Step Setpoint n = step number	SYn,xxx.xx[CR]
Read Step Setpoint	RYn[CR]
Set Step Period n = step number	SXn,xxx.xx[CR]
Read Step Period	RXn[CR]
Read Number of Steps	Rs[CR]
Set Number of Loops 0 to 9999 additional loops after first program execution	SKxxxx[CR]
Read Number of Loops	RK[CR]
Set Hold Status Hold: i = 1, No hold: i = 0	SZi[CR]
Pause/Resume Program Resume: i = 1, Pause: i = 0	SGi[CR]
End Program	SR[CR]
Read Elapsed Step Time	RE[CR]
Select Program Number	SVx[CR]
Read Selected Program Number	RV[CR]
Read Current Period	RC[CR]
Skip Ahead One Period	SJ[CR]

To set the communications data format the controller must be deactivated (Main display indicates OFF). Press the RS232 button. The word "Baud" will momentarily appear followed by the current baud rate (9600, 4800, 1200, 600 or 300). Use the keypad to enter the desired change, if any. Press ENTER and "db" will momentarily appear followed by the current number of data bits setting. Again, use the keypad to enter any desired change (7 or 8) and then press ENTER. "Sb" will momentarily appear followed by the current number of stop bits (1 or 2). Change, if needed, and press ENTER and "PAr" will momentarily appear followed by the current parity control setting (0 = none, 1 = odd, 2 = even). Change, if needed, and press ENTER.

To manually exit this mode of operation press RS232. The RS232 LED will start to flash. Press the CLEAR button and the RS232 LED will extinguish.

Communication Command Protocol

The following table lists the communication command protocol for programming the controller via a computer. Use the Ctrl - C key combination to clear the controller receiving buffer if an erroneous character is detected.

FUNCTION	SYNTAX[1]	RETURN MESSAGE[2]
SET SETPOINT	SSxxx.xx[CR]	![CR]
SET LOW LIMIT	SLxxx.xx[CR]	![CR]
SET HIGH LIMIT	SHxxx.xx[CR]	![CR]
SET PROPORTIONAL BAND[3]	SPxx.xx[CR]	![CR]
SET INTEGRAL[4]	SIxx.xx[CR]	![CR]
SET DERIVATIVE[5]	SDx.xx or Sdx.xx[CR]	![CR]
COMPRESSOR INHIBIT	SCi[CR]	![CR]
BOOST HEATER INHIBIT	SBi[CR]	![CR]
MAX MODE INHIBIT	SMi[CR]	![CR]
SET POWER STATUS FLAG	SWi[CR]	![CR]
SET ON/OFF	SOi[CR]	![CR]
SELECT PROGRAM NUMBER	SVx[CR]	![CR]
SET STEP SETPOINT	SYn,xxx.xx[CR]	![CR]
SET STEP PERIOD	SXn,xxx.x[CR]	![CR]
SET NUMBER OF PERIODS	Ssn[CR]	![CR]
SET NUMBER OF LOOPS	SKxxxx[CR]	![CR]
SET HOLD STATUS	SZi[CR]	![CR]
END PROGRAM	SR[CR]	![CR]
ECHO CONTROL[6]	SEi[CR]	![CR]
REMOTE SENSOR CONTROL	Sri[CR]	![CR]
SUSPEND/RESUME PROGRAM	SGi[CR]	![CR]
SKIP AHEAD ONE PERIOD	SJ[CR]	![CR]
READ SETPOINT	RS[CR]	xxx.xx[CR]
READ TEMPERATURE	RT[CR]	xxx.xx[CR]
READ ALARM STATUS	RF[CR]	![CR]
READ REMOTE TEMPERATURE	RR[CR]	xxx.xx[CR]
READ UNITS	RU[CR]	C[CR] or F[CR]
READ CURRENT PERIOD	RC[CR]	xx[CR]
READ ELAPSED TIME	RE[CR]	xxx.x[CR]
READ LOW LIMIT	RL[CR]	xxx.xx[CR]
READ HIGH LIMIT	RH[CR]	xxx.xx[CR]
READ PROPORTIONAL BAND	RP[CR]	xx.xx[CR]
READ INTEGRAL	RI[CR]	xx.xx[CR]
READ DERIVATIVE	Rd[CR]	x.xx[CR]
READ PROGRAM NUMBER	RV[CR]	x[CR]
READ STEP SETPOINT	RYn[CR]	xxx.xx[CR]
READ STEP PERIOD	RXn[CR]	xxx.x[CR]
READ NUMBER OF STEPS	Rs[CR]	x[CR]
READ NUMBER OF LOOPS	RK[CR]	xxxx[CR]
READ POWER STATUS	RW[CR]	x[CR]

1. x = ASCI digit, i = 0 (OFF or STOP) i = 1 (ON or GO), n = step number.
2. Ensure the return message is correct. If not, resend or troubleshoot communication lines.
3. Factory preset at 0.6%.
4. Factory preset at 0.25 repeats per minute.
5. Factory preset at 0.05 minutes.
6. Allows computer to compare send signal to receive signal.

Remote Programming

The bath can be programmed and controlled by a remote computer. Enter step setpoints using the SYn command, time periods using the SXn command, number of loops using the SKxxxx command and number of periods in the program using the Ssn command. Start the program using SG1 and suspend the program using SG0. When the program is finished it will stop automatically. If needed, SR will end the program at any time. Here is a four setpoint, two loop example:

SV1[CR]	Select program number one
SY1,25.00[CR]	First setpoint = 25.00 degrees
SX1,20.0[CR]	First period = 20.0 minutes
SY2,40.00[CR]	Second setpoint = 40.00 degrees
SX2,60.0[CR]	Second period = 60.0 minutes
SY3,40.00[CR]	Third setpoint = 40.00 degrees
SX3,45.0[CR]	Third period = 45.0 minutes
SY4,25.00[CR]	Fourth setpoint = 25.00 degrees
Ss3[CR]	Program has three periods
SK2[CR]	Execute the program three times total
SG1[CR]	Begin executing program
SG0[CR]	Temporarily suspend the program
SR[CR]	Stop the program before it is finished

Blank page

Appendix B

International Quick Reference Guides

RTE mikroprozessorgesteuert Kurzbedienungsanleitung

Installation

Das Gerät verfügt über ein luftgekühltes Kühlsystem. Die Luft wird an der Vorderseite angesaugt und strömt an der Rückseite aus. Das Gerät muß so plaziert werden, daß der Luftstrom nicht behindert wird. Bei ungenügender Ventilation wird die Kühlleistung reduziert und kann in extremen Situationen zu einem Ausfall des Kühlsystems (Kompressors) führen.

Aufstellorte mit hoher Staubentwicklung sollten vermieden werden, und es sollte eine regelmäßige Reinigung des Gerätes durchgeführt werden. Um einwandfrei zu funktionieren, muß das Gerät große Luftmengen durch den Kondensor ansaugen. Bei Staub- und Schmutzablagerungen auf dem Kondensorheizkörper kommt es zu einem Verlust von Kühlleistung.

Das Gerät behält seine maximale Kühlleistung bis zu einer Umgebungstemperatur von ca. +24°C.

Vergewissern Sie sich, daß die Spannung Ihrer Stromanschlüsse mit der für das Gerät vorgesehenen Spannung übereinstimmt (± 10%).

Die Schlauchanschlüsse (1/4 Zoll MPT) des Gerätes befinden sich an der Rückseite und sind mit PUMP INLET und PUMP OUTLET bezeichnet. Entfernen Sie die Kappen, falls externe Zirkulation gewünscht wird. Schließen Sie den PUMP OUT-LET-Anschluß an den Eingang Ihres Instruments und den PUMP INLET-Anschluß an den Ausgang Ihres Instruments an.

Füllen Sie das Reservoir bis zu einem Stand, der zwischen den horizontalen Markierungen liegt, die auf dem Blech markiert sind, das den Arbeitsbereich von der Pumpeneinheit trennt.

Verwenden Sie niemals entflammbare oder Korrosion verursachende Flüssigkeiten. Die gewählte Flüssigkeit muß eine Viskosität von maximal 50 Centistokes bei der niedrigsten möglichen Arbeitstemperatur haben. Für den Betrieb im Arbeits-Temperaturbereich von +8°C bis +80°C empfiehlt ThermoNESLAB Leitungswasser als Kühlmittel.

Wenn sie zu einem externen System zirkulieren, sollten Sie zusätzliche Kühlflüssigkeit zur Hand haben, um den Kühlflüssigkeitsstand in den Zirkulationsleitungen und dem externen System beibehalten zu können.

Betreiben Sie das Gerät niemals mit leerem Arbeitsbereich!

Inbetriebnahme

Vor Inbetriebnahme des Gerätes vergewissern Sie sich bitte, daß die elektrischen Anschlüsse und die Rohr- u. Schlauchanschlüsse sachgemäß installiert sind und daß das gesamte System mit Kühlflüssigkeit gefüllt ist.

Geräte, die bei 220 Volt betrieben werden, verfügen über einen Stromkreisunterbrecher auf der Rückseite des Gerätes. Vergewissern Sie sich, daß dieser auf ON gestellt ist. Um das Gerät einzuschalten, müssen Sie den I/O-Schalter auf „I“ stellen. Die Power-Lampe leuchtet auf, wenn das Gerät in Betrieb ist. Um das Gerät abzuschalten, muß der I/O-Schalter auf „O“ gestellt werden.

Nach dem Ausschalten des Gerätes sollten Sie vor dem Wiedereinschalten ca. 5 Minuten warten, damit das Kühlsystem einen Druckausgleich durchführen kann. Beachtet man diese Wartezeit nicht, kommt es zu kurzen Schaltfrequenzen des Kompressors und eine Kühlung ist nicht möglich.

Mikroprozessor-Temperatursteuerung

Bitte schlagen Sie Sektion IV der Betriebsanleitung auf, um die kompletten Bedienungsanweisungen für die Mikroprozessorsteuerung nachzulesen.

Wartung

Überprüfen Sie regelmäßig die Kühlflüssigkeit im Reservoir. Sollte eine Säuberung notwendig sein, spülen Sie das Reservoir mit einer speziellen Reinigungsflüssigkeit, die mit dem Umlaufsystem und der Kühlflüssigkeit kompatibel ist.

Das Kühlmittel sollten Sie regelmäßig erneuern. Wenn Sie das Gerät bei niedrigen Temperaturen betreiben, erhöht sich mit der Zeit der Wasseranteil in der Kühlflüssigkeit. Dies führt zum Verlust von Kühlkapazität.

Vor Ersetzen der Kühlflüssigkeit erhöhen Sie bitte die Betriebstemperatur des Gerätes so weit, daß die Kühlspulen eisfrei sind.

Regelmäßiges Absaugen des Kondensor-Heizkörpers ist erforderlich. Die Reinigungshäufigkeit hängt von der Betriebsumgebung ab. Eine monatliche Überprüfung des Kondensors ist empfehlenswert. So werden Sie nach einigen Monaten einen Reinigungsrhythmus gefunden haben.

RTE Kvik referance.

Installation:
Opstilles i rene omgivelser. Dette system er luftkølet, og luften trækkes ind forfra og udledes bagtil, sørg derfor for god cirkulation om instrumentet.

Steder med meget støv skal undgåes, og periodisk rensning skal udføres, hvis utilsigtet nedbrud skal undgås. Opbygning af støv vil medføre fald i kølekapasiteten og i værste fald overophedning af systemet.

Check at netspændingen er den nominelle 240V +/- max. 10% og temperatur max. 24^0 C ved optimal udnyttelse.

Slangetilgang er på bagsiden mærket „Pump inlet“ til indgang på dit emne og „Pump outlet“ på udgangen.

Ledningsvand (ionbyttet) kan anvendes mellem +8 til 80^0 C, under $+8^0$ C skal væsken blandes op med ethylenglycol.

Fyldning af reservoiret foregår ved at fjerne panelet, som er forsynet med fingerskruer, og påfyld egnet rent kølevæske, max 5 cm fra toppen.

Betjening:
Før opstart checkes elektriske forbindelser, slangeforbindelser og væskestand.

Microprocessorkontrol:
Se venligst Section IV i manualen.inde, skal temperaturen ændres drejes herefter på „Adjust“ knappen. Slip „Display“ knappen og aktuel temperatur vises.

Periodisk vedligeholdelse:
Check standen af væske periodisk. Check med mellemrum vakuumet på pumpesiden, rens systemet og check for aflejringer, vækst, utætheder, check vakuumpumpen med kondenser og evt. filtre. Husk åben aldrig instrumentet uden strømmen er afbrudt, og strømkablet er taget ud!

RTE met Microprocessor, Handleiding voor snelle installatieprocedure.

Installatie
Het apparaat heeft een luchtgekoeld koelsysteem. Lucht wordt aangezogen aan de voorkant van het apparaat en weer vrijgegeven via de achterkant. Plaats het apparaat op een dusdanige manier dat de luchttoevoer en afvoer niet worden belemmerd.

Het is aan te raden stoffige ruimtes te vermijden en de condensor regelmatig schoon te maken. Voor een optimale werking dient via de condensor een voldoende hoeveelheid lucht te circuleren. Een opeenhoping van stof en vuil op de condensor kan leiden tot een verlies van koelcapaciteit.

Het apparaat behoudt haar integrale capaciteit bij een omgevingstemperatuur tot ongeveer 24°C.

Let erop dat de netspanning gelijk is aan het aangegeven voltage, +/_ 10%.

De slangaansluitingen zijn bevestigd aan de achterkant van het apparaat en zijn voorzien van het label PUMP INLET en PUMP OUTLET. Deze aansluitingen zijn 1/4 inch MPT. Verwijder de pluggen indien externe circulatie gewenst is. Bevestig de PUMP OUTLET aan de ingang van uw applicatie. Bevestig de PUMP INLET plug aan de uitgang van uw applicatie.

Vul het reservoir tot het volgende niveau: tussen de horizontale markeringen op de roestvrijstalen scheidingsplaat, die de werkruimte van het pompgedeelte scheidt.

Gebruik nooit brandbare of andere koelvloeistoffen, die het toestel kunnen aantasten. De vloeistof die u gaat gebruiken moet een viscositeit hebben van 50 centistokes of minder bij lage temperatuurwerking. Kraanwater wordt in het algemeen aanbevolen wanneer u bij temperaturen werkt van +8°C tot +80°C.

Wanneer u wilt circuleren naar een extern systeem, dient u altijd extra vloeistof achter de hand te houden om het juiste vloeistofniveau, zowel in het interne als het externe gedeelte van het systeem, te handhaven.

Gebruik het apparaat nooit wanneer het reservoir leeg is.

Operationeel gebruik
Alvorens het apparaat in gebruik te nemen, dient u eerst alle elektrische- en slangaansluitingen te controleren. Tevens dient u te controleren of het systeem gevuld is met koelvloeistof.

220 Volt apparaten hebben een z.g. “circuit breaker” aan de achterkant van het apparaat. Controleer of deze in werking is gesteld. Om het apparaat te starten, gelieve de I/O knop aan de zijkant van het apparaat te draaien naar de I positie. Het lampje zal oplichten als indicatie dat het systeem in werking is gesteld. Om het apparaat uit te zetten, gelieve de I/O knop naar de O positie te draaien.

Wanneer het apparaat uitgeschakeld is, gelieve 5 minuten te wachten alvorens u het apparaat weer in werking stelt. Deze tijd is nodig om de koeldruk gelijk te stellen. Indien dit niet gebeurt, zal shortcycle binnen de compressor optreden (klikkend geluid) en er vindt geen koeling plaats.

Microprocessor Controller
Voor verdere (complete) instructies betreffende de bediening van de microprocessor regelaar, zie hoofstuk IV van deze handleiding.

Periodiek Onderhoud
De vloeistof in het reservoir dient regelmatig gecontroleerd te worden. Indien reiniging noodzakelijk is, zal het reservoir schoongespoeld moeten worden met een vloeistof welke verenigbaar is met het koelsysteem en de koelvloeistof.

De koelvloeistof dient regelmatig vervangen te worden. Wanneer u werkt bij lage temperaturen, zal de concentratie van het water in de koelvloeistof gedurende die periode toenemen, wat kan leiden tot verlies van koelcapaciteit.

Alvorens u de koelvloeistof vervangt, dient u de operationele temperatuur van het apparaat om de koelspiralen vrij te maken van ijs.

Het periodiek reinigen van de condensor is noodzakelijk. Het aantal malen dat dit moet gebeuren hangt af van de omgeving waar het apparaat staat opgesteld en wordt gebruikt. Wij raden een algemene maandelijkse inspektie van de condensor aan na de installatie. Na enkele maanden zal duidelijk zijn hoe vaak men het apparaat dient te reinigen.

Kortfattad Bruksanvisning för RTE Mikroprocessor

Installation
Maskinen har ett luft kylt kylnings system. Luft tas in på framsidan av maskinen och släpps ut på sidan och baksidan av maskinen. Ställ maskinen så att intaget och uttaget inte är blockerade. Otillräcklig ventilation leder till minskad kylningskapacitet och i vissa fall kan kompressorn gå sönder.

Undvik dammiga områden och rengör maskinen periodvis. För att fungera ordentligt måste mycket luft passera genom kondensorn. Damm och smuts i kondensorn leder till minskad kylnings kapacitet.

Maskinen har full kylningskapacitet upp till en temperatur av +75°F (24°C).

Röranslutning finns på baksidan av maskinen och har följande beskrivning: SUPPLY och RETURN. Anslutningarna är 1/4 inch MPT. Ta bort de skyddande plast bitarna från röranslutningarna. Anslut SUPPLY kopplingen till intaget av din anordning och RETURN kopplingen till uttaget.

För att fylla tanken, lösgör skruvarna och ta bort luckan. Ta bort tank pluggen och fyll tanken med ren kylnings vätska.

Använd aldrig eldfarliga eller frätande vätskor. Vätskan måste ha en viskositet av 50cST eller mindre vid den lägsta användnings temperaturen. Vanligt kran vatten är den rekommenderade vätskan vid en temperatur mellan +8°C och +80°C. Under +8°C måste en vätska som inte fryser användas. En blandning av vanligt vatten och etylenglykol (laboratorie kvalitet) föreslås.

Ha extra vätska redo om din anordning kräver det så att den rätta nivån behålls i cirkulations sytemet.

Användning
Innan maskinen startas, kontrollera alla elektriska och alla rör anslutningar. Se till att cirkulations systemen har fyllts med vätska.

220V maskiner har en ström brytare på baksidan av maskinen. För att starta maskinen, sätt I/O knappen på sidan av maskinen på I. Lampan lyser för att visa att maskinen är på. Sätt knappen på O för att stänga av den.

Under normal användning bör REFRIGERATION knappen vara på när maskinen används under 50°C. MIN används när temperaturen är under 0°C och mellan 30°C och 50°C. Använd MAX från 0°C till 30°C.

Sätt start knappen på ON för att starta maskinen. COOL och IDLE på framsidan visar statusen på kylningssystemet. Cool lyser när värme tas bort från köldmedlet. När temperaturen närmar sig den förbestämda önskade temperaturen kommer de två att växla.

Efter att maskinen stängts av, vänta 5 minuter innan maskinen sätts på igen för att låta kylningstrycken att utjämnas. Ingen kylning kommer att utföras om inte trycken tillåts att utjämnas.

Mikroprocessor Kontroll
Se del IV av instruktions boken för en utförlig beskrivning av Mikroprocessor kontrollen.

Periodiskt Underhåll
Inspektera vätskan i tanken periodiskt. Om rengöring är nödvändigt, spola tanken med en rengörings vätska som är förenlig med cirkulationssystemet och kylvätskan.

Kylvätskan bör bytas periodvis. När enheten används vid låga temperaturer kommer vätskans koncentration av vatten att öka vilket leder till minskad kylningskapacitet.

Periodisk rengöring av kondensorn är nödvändig. Hur ofta rengöring är nödvändig beror på miljön. Vi rekommenderar en visuell inspektion av kondensorn varje månad.

PROCEDIMIENTOS DE OPERACION DE REFERENCIA RAPIDA
PARA EL RTE CON MICROPROCESADOR

INSTALACION

La unidad tiene un sistema de refrigeración por aire. El aire es dirigido hacia el frontal de la unidad y se descarga por la parte trasera y lateral. Sitúe la unidad para no impedir la entrada y descarga. Una ventilación inadecuada causará una reducción en la capacidad de enfriamiento y, en casos extremos, un fallo en el compresor.

Deben evitarse las zonas excesivamente polvorientas y debe instituirse un calendario de limpiezas periódicas. Para un funcionamiento adecuado, la unidad necesita empujar una cantidad sustancial de aire a través de un condensador. Un cúmulo de polvo o residuos en las aletas del condensador ocasionaría una pérdida de capacidad de enfriamiento.

La unidad retendrá su capacidad completa en temperaturas ambiente de hasta aproximadamente + 75 ºC.

Asegúrese de que el voltaje de la fuente de energía sea igual que el voltaje especificado, +/- 10%.

Las conexiones de tuberías están situadas en la parte trasera de la unidad y están marcadas como PUMP INLET y PUMP OUTLET. Estas conexiones son 1/4" MPT. Saque las tapas cuando requiera circulación externa. Conecte el adaptador PUMP OUTLET a la entrada de su aplicación. Conecte el adaptador PUMP INLET a la salida de su aplicación.

Llene el reservorio a un nivel entre los marcadores horizontales situados en la puerta de acero inoxidable que separa la zona de trabajo de la bomba.

No utilice nunca fluidos inflamables o corrosivos. El fluido elegido debe tener una viscosidad de 50 centistokes o menos a las temperaturas de operación más bajas. Se recomienda agua corriente para funcionar entre + 8 ºC a + 80 ºC.

Cuando bombee a un sistema externo, tenga fluido extra a mano para mantener el nivel apropiado tanto en las lineas circulantes como en el sistema externo.

Nunca haga funcionar el instrumento con el área de trabajo vacía.

OPERACION

Antes de poner en marcha la unidad, compruebe todas las conexiones eléctricas y de tuberías. Asegúrese de que el sistema circulador se ha llenado con fluido.

Las unidades de 220 V. tienen un cortador de circuito en la parte trasera de la unidad. Asegúrese de que está en posición ON. Para poner en marcha la unidad, ponga el interruptor I/O situado en el lateral de la unidad en posición I. La lámpara Power se iluminará para indicar que el sistema está funcionando. Para apagarlo, ponga el interruptor de encendido en posición O.

Cuando se apaga la unidad, espere aproximadamente cinco minutos antes de volver a ponerla en marcha. Esto da tiempo para que las presiones de refrigeración se ecualicen. Si no se permite ecualizarse las presiones, el compresor se cortocicuitará y no enfriará.

CONTROLADOR POR MICROPROCESADOR

Ver Sección IV de este manual para instrucciones completas para utilizar el controlador por microprocesador.

MANTENIMIENTO PERIODICO

Inspeccione periódicamente el fluido del reservorio. Si es necesaria una limpieza, rocíe el reservorio con un fluido de limpieza compatible con el sistema de circulación y el fluido refrigerante.

El fluido refrigerante debe sustituirse periódicamente. Cuando se funciona a baja temperatura, la concentración de agua en el fluido refrigerante aumentará con el tiempo, ocasionando una pérdida de capacidad refrigerante.

Antes de cambiar el fluido refrigerante, suba la temperatura de operación de la unidad para descongelar los serpentines de refrigeración.

Es necesario un vaciado periódico de las aletas del condensador. La frecuencia de limpieza depende del entorno en que funciona el aparato. Recomendamos una inspección visual mensual del condensador después de la instalación inicial. Después de varios meses, quedará establecida la frecuencia de limpieza.

Appendix C
PROGRAMMING SOFTWARE

NEScom Software

The ThermoNESLAB Communications Software is a user friendly software that allows you to automate your temperature control process. The software includes a 3½" disk, comprehensive operator's manual and a toll-free number to a trained technical staff.

NEScom Software allows you to write custom temperature programs for our Digital or Microprocessor based temperature control apparatus. Choose upper or lower temperature limits and monitor system status with an alarm. NEScom can also record your results on a user selectable graph. NesCom must be used with an IBM or 100% compatible computer.

Select from easy to use product icons.

Create graphs and charts.

Easily configure ramping functions which set the setpoint over time.

View pop-up alarm windows which display if an alarm condition occurred.

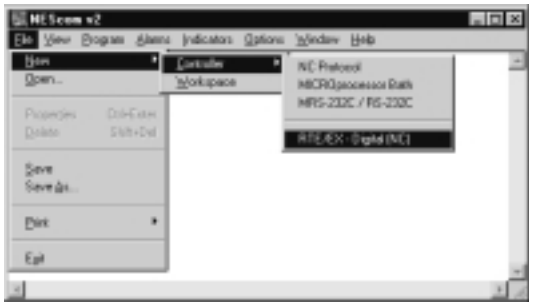

Select software functions from the easy to use pulldown menus.

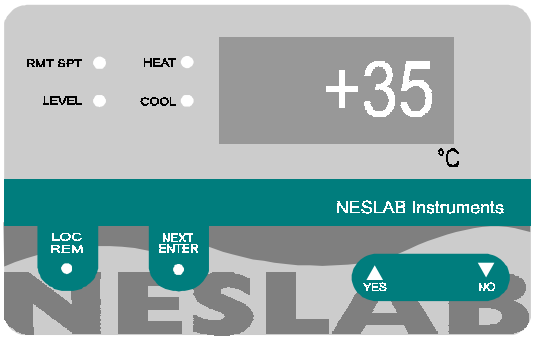

View a virtual controller screen which allows remote monitoring and operation of product control panel.

WARRANTY

ThermoNESLAB Instruments, Inc. warrants for 12 months from date of shipment any ThermoNESLAB unit according to the following terms.

Any part of the unit manufactured or supplied by ThermoNESLAB and found in the reasonable judgment of ThermoNESLAB to be defective in material or workmanship will be repaired at an authorized ThermoNESLAB Repair Depot without charge for parts or labor. The unit, including any defective part must be returned to an authorized ThermoNESLAB Repair Depot within the warranty period. The expense of returning the unit to the authorized ThermoNESLAB Repair Depot for warranty service will be paid for by the buyer. ThermoNESLAB's responsibility in respect to warranty claims is limited to performing the required repairs or replacements, and no claim of breach of warranty shall be cause for cancellation or recision of the contract of sales of any unit.With respect to units that qualify for field service repairs, ThermoNESLAB's responsibility is limited to the component parts necessary for the repair and the labor that is required on site to perform the repair. Any travel labor or mileage charges are the financial responsibility of the buyer.

The buyer shall be responsible for any evaluation or warranty service call (including labor charges) if no defects are found with the ThermoNESLAB product.

This warranty does not cover any unit that has been subject to misuse, neglect, or accident. This warranty does not apply to any damage to the unit that is the result of improper installation or maintenance, or to any unit that has been operated or maintained in any way contrary to the operating or maintenance instructions specified in ThermoNESLAB's Instruction and Operation Manual. This warranty does not cover any unit that has been altered or modified so as to change its intended use.

In addition, this warranty does not extend to repairs made by the use of parts, accessories, or fluids which are either incompatible with the unit or adversely affect its operation, performance, or durability.

ThermoNESLAB reserves the right to change or improve the design of any unit without assuming any obligation to modify any unit previously manufactured.

THE FOREGOING EXPRESS WARRANTY IS IN LIEU OF ALL OTHER WARRANTIES, EXPRESSED OR IMPLIED, INCLUDING BUT NOT LIMITED TO WARRANTIES OR MERCHANTABILITY AND FITNESS FOR A PARTICULAR PURPOSE.

ThermoNESLAB'S OBLIGATION UNDER THIS WARRANTY IS STRICTLY AND EXCLUSIVELY LIMITED TO THE REPAIR OR REPLACEMENT OF DEFECTIVE COMPONENT PARTS AND ThermoNESLAB DOES NOT ASSUME OR AUTHORIZE ANYONE TO ASSUME FOR IT ANY OTHER OBLIGATION.

ThermoNESLAB ASSUMES NO RESPONSIBILITY FOR INCIDENTAL, CONSEQUENTIAL, OR OTHER DAMAGES INCLUDING, BUT NOT LIMITED TO LOSS OR DAMAGE TO PROPERTY, LOSS OF PROFITS OR REVENUE, LOSS OF THE UNIT, LOSS OF TIME, OR INCONVENIENCE.

This warranty applies to units sold in the United States. Any units sold elsewhere are warranted by the affiliated marketing company of ThermoNESLAB Instruments, Inc. This warranty and all matters arising pursuant to it shall be governed by the law of the State of New Hampshire, United States. All legal actions brought in relation hereto shall be filed in the appropriate state or federal courts in New Hampshire, unless waived by ThermoNESLAB.

RTE Series Refrigerated Baths/Circulators

NESLAB Manual P/N 000258
Rev. 08/06/97

Instruction and Operation Manual

NESLAB online
Product Service Information, Electronic Catalog, Applications Notes, MSDS Forms, e-mail.

(603)427-2490
Set modem to 8-N-1 protocol, 1200 - 14400 baud

Voice Info: (800) 4-NESLAB

Comments on this manual can be sent to:

NESLAB@lifesciences.com

or visit our Web page at:

http://www.neslabinc.com

RTE-Series Refrigerated Bath/Circulator
Instruction and Operation Manual

Table of Contents

PREFACE

Compliance 2
Unpacking 2
Warranty 2
After-sale Support 2

SECTION I
Safety

Warnings 3

SECTION II
General Information

Description 4
Specifications 4

SECTION III
Installation

Site 5
Electrical Requirements 5
Plumbing Requirements 6
Fluids 8
Filling Requirements 8

SECTION IV
Controllers

Controllers 9
Start Up 9
RTE-221 Boost Heater 11
Autorefill (Optional) 11
High Temperature/Low Liquid Level Safety 13
15-Pin Accessory Connector 13

SECTION V
Maintenance

Service Contracts 14
Condenser 14
Reservoir Cleaning 15
Algae 15

SECTION VI
Troubleshooting

Checklist 16
Service Assistance and Technical Support 16

APPENDIX
Programming Software

WARRANTY

Preface

Compliance

Products tested and found to be in compliance with the requirements defined in the EMC standards defined by 89/336/EEC as well as Low Voltage Directive (LVD) 73/23/EEC can be identified by the CE label on the rear of the unit. The testing has demonstrated compliance with the following directives:

LVD, 73/23/EEC	Complies with UL 3101-1:93
EMC, 89/336/EEC	EN 55011, Class A Verification EN 50082-1:1992 IEC 1000-4-2:1995 IEC 1000-4-3:1994 IEC 1000-4-4:1995

For any additional information refer to the Letter of Compliance that shipped with the unit (Declaration of Conformity).

Unpacking

Retain all cartons and packing material until the unit is operated and found to be in good condition. If the unit shows external or internal damage, or does not operate properly, contact the transportation company and file a damage claim. Under ICC regulations, this is your responsibility.

Warranty

Units have a warranty against defective parts and workmanship for one year from date of shipment. See back page for more details.

After-sale Support

NESLAB is committed to customer service both during and after the sale. If you have questions concerning the operation of your unit, contact our Sales Department. If your unit fails to operate properly, or if you have questions concerning spare parts or Service Contracts, contact our Customer Service Department. Before calling, please obtain the following information from the unit's serial number label:

- *BOM number* _____
- *Serial number* _____

Section I Safety

Warnings

Make sure you read and understand all instructions and safety precautions listed in this manual before installing or operating your unit. If you have any questions concerning the operation of your unit or the information in this manual, contact our Sales Department.

Performance of installation, operation, or maintenance procedures other than those described in this manual may result in a hazardous situation and may void the manufacturer's warranty.

Transport the unit with care. Sudden jolts or drops can damage the refrigeration lines. The units weigh approximately: RTE-111, 86 pounds (390 kilograms); RTE-211, 99 pounds (45 kilograms); RTE-221, 106 pounds (48 kilograms). Units should be transported with equipment designed to lift these weights.

Observe all warning labels.

Never remove warning labels.

Never operate damaged or leaking equipment.

Never operate the unit without bath fluid in the bath.

Never use pure ethylene glycol as a bath fluid. A minimum 80/20 mixture of Ethylene Glycol and tap water is allowed.

For 220 - 240 volt units supplied without a line cord, use a harmonized (HAR) grounded 3-conductor cord, type H 0 5 V V - F , with conductors listed below. A suitable cord end is required for connecting to the equipment (see unit socket) and must terminate with an IEC approved plug for proper connection to power supply.

NON-BOOST HEATER UNITS	**Nominal 1.0 mm^2 cross section rated 10 Amps Unit Socket: IEC - 320 C13**
BOOST HEATER UNITS	**Nominal 1.5 mm^2 cross section rated 16 Amps Unit Socket: IEC - 320 C19**

Always turn off the unit and disconnect the line cord from the power source before performing any service or maintenance procedures, or before moving the unit.

Always empty the bath before moving the unit.

Never operate equipment with damaged line cords.

Refer service and repairs to a qualified technician.

In addition to the safety warnings listed above, warnings are posted throughout the manual. These warnings are designated by an exclamation mark inside an equilateral triangle with text highlighted in bold print. Read and follow these important instructions. Failure to observe these instructions can result in permanent damage to the unit, significant property damage, personal injury or death.

Section II General Information

Description

The RTE-Series Refrigerated Bath/Circulators are designed to provide temperature control for applications requiring a fluid work area or pumping to an external system.

Units consists of a non-CFC air-cooled refrigeration system, circulation pump, seamless stainless steel bath, work area cover, and a temperature controller.

Specifications

	RTE-111	RTE-211	RTE-221
Temperature Range[1] *Analog controller* *Digital controller*	-25°C to +100°C -25°C to +150°C		-23°C to +100°C -23°C to +150°C
Temperature Stability[2,3,4] *Analog controller* *Digital controller*	±0.1°C ±0.01°C		
Cooling Capacity[2,5] *Watts* *BTU/H*	500 1705		
Pump Capacity	15 lpm at 0' (0 M) 0 lpm at 16' (4.9 M)		
Heater (Watts) *60 Hz Models* *50 Hz Models*	800 1000	800 1000	800/800 boost 1000/800 boost
Bath Work Area *(L x W x D)* *Inches* *Centimeters*	4 3/4 x 8 x 6 12.1 x 20.3 x 15.3	9 1/4 x 10 x 6 23.5 x 25.4 x 15.2	9 1/4 x 10 x 9 23.5 x 25.4 x 22.9
Bath Volume *Liters*	7.0	12.25	20.5
Case Dimensions *(H x W x D)* *Inches* *Centimeters*	25 x 10 5/16 x 15 7/8 63.5 x 26.2 x 40.3	25 x 12 3/8 x 18 3/8 63.5 x 31.4 x 46.7	27 7/8 x 12 3/8 x 18 3/8 70.8 x 31.4 x 46.7
Power Requirements[6]	115 V, 60 Hz, 12 Amp 220/240 V, 50 Hz, 7.5 Amp	115 V, 60 Hz, 12 Amp 220/240 V, 50 Hz, 7.5 Amp	115 V, 60 Hz, 16 Amp 220/240 V, 50 Hz, 10 Amp

1. Low end temperature for analog and digital 50Hz units is -18°C, -23°C and -21°C respectively.
2. Specifications listed for units operating at +20°C bath temperature, +20°C (+70°F) ambient, with tap water as bath fluid.
3. For operation below 0°C, covering the bath work area may improve stability.
4. For some applications, agitation and stability above ambient may be may be improved by connecting a small length of hose between the pump connections on the rear of the unit.
5. 50 Hz RTE-111 units have a 375 watt cooling capacity.
6. Power Board Transformer Fuse–Analog T 0.5A 250V (Qty 1), Digital T 0.8A 250V (Qty 2) [T=Time Delay]

Section III Installation

Site

The indentations on the unit's sides are designed to function as handles. Lift the unit by the handles and locate it on a sturdy work area. Ambient temperatures should be inside the range of +50°F to +80°F (+10°C to +27°C).



Never place the unit in a location where excessive heat, moisture, or corrosive materials are present.

The unit has an air-cooled refrigeration system. Air is drawn through the front panel and discharged through the rear panel. The unit must be positioned so the air intake and discharge are not impeded. A minimum clearance of 12 inches (30 centimeters) at the front and rear of the unit is necessary for adequate ventilation. Inadequate ventilation will reduce cooling capacity and, in extreme cases, can cause compressor failure.

Excessively dusty areas should be avoided and a periodic cleaning schedule should be instituted (see Section VI, Cleaning).

The unit will retain its full rated capacity in ambient temperatures up to approximately +75°F (+24°C). Above +75°F, derate the cooling capacity 1% for every 1°F above +75°F, to a maximum ambient temperature of +95°F. In terms of Celsius, derate the cooling capacity 1% for every 0.5°C above +24°C, to a maximum ambient temperature of +35°C.

Electrical Requirements



Line voltage may be easily accessible inside the pump/control box. Always unplug the unit prior to removing pump/control box cover.

Refer to the serial number label on the rear of the unit to identify the specific electrical requirements of your unit.

Ensure the voltage of the power source meets the specified voltage, ±10%.

The unit construction provides extra protection against the risk of electric shock by grounding appropriate metal parts. The extra protection may not function unless the power cord is connected to a properly grounded outlet. It is the user's responsibility to assure a proper ground connection is provided.



For 220 - 240 volt units supplied without a line cord, use a harmonized (HAR) grounded 3-conductor cord, type H 0 5 V V - F , with conductors listed below. A suitable cord end is required for connecting to the equipment (see unit socket) and must terminate with an IEC approved plug for proper connection to power supply.

BOOST HEATER UNITS	**Nominal 1.5 mm² cross section rated 16 Amps**
	Unit Socket: IEC - 320 C19
NON-BOOST HEATER UNITS	**Nominal 1.0 mm² cross section rated 10 Amps**
	Unit Socket: IEC - 320 C13

Plumbing Requirements



Ensure the unit is off before connecting tubing to the unit.

Hose Connections

The pump connections are located at the rear of the pump box and are labelled PUMP INLET and PUMP OUTLET. These connections are bent upward so the recirculating fluid will drain back into the reservoir when the hoses are disconnected. Both connections are capped with stainless steel serrated plugs.

The pump lines have ¼ inch male pipe threads for mating with standard plumbing fittings. For your convenience stainless steel adapters, ¼ inch female pipe thread to $^{3}/_{8}$ inch O.D. serrated fitting, are provided. (To assure proper fit, they should be installed using Teflon® tape around the threads.)

Flexible tubing, if used, should be of heavy wall or reinforced construction. Make sure all tubing connections are securely clamped. Avoid running tubing near radiators, hot water pipes, etc. If substantial lengths of tubing are necessary, insulation may be required to prevent loss of cooling capacity.

Tubing and insulation are available from NESLAB. Contact our Sales Department for more information (see Preface, After-sale Support).

It is important to keep the distance between the unit and the external system as short as possible, and to use the largest diameter tubing practical. Tubing should be straight and without bends. If diameter reductions must be made, make them at the inlet and outlet of the external system, not at the unit.

If substantial lengths of cooling lines are required, they should be pre-filled with bath fluid before connecting them to the unit. This will ensure that an adequate amount of fluid will be in the bath once it is in operation.

Pumping

The pump is designed to deliver a flow of 15 liters per minute (4 gallons per minute) at 0 feet head. To prevent external circulation, the PUMP INLET and PUMP OUTLET lines on the rear of the unit are capped. The caps must be removed when external circulation is required.

To properly secure external hose connections to the unit, wrap Teflon® tape around the pipe line threads before installation. Once the hose connections are made, the hoses must be properly plumbed to an external system. *It is important the bath is not in operation until all plumbing is complete.*

NOTE: To increase agitation in the bath when not circulating externally, connect a short loop of hose between the inlet and outlet lines.

If the bath is not used for external circulation or incresed agitation, make sure the stainless steel caps are in place prior to operating the bath.

Circulating to an open container

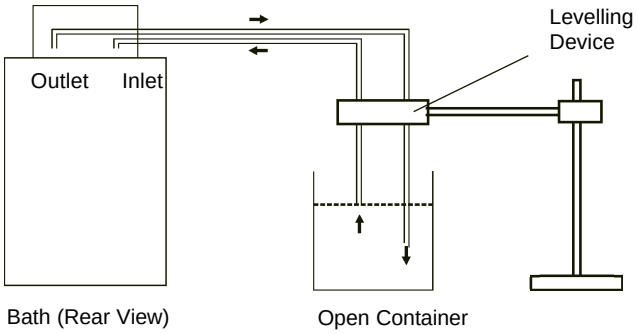

A stainless steel leveling device is available to aid circulation to an open vessel. Contact our Sales Department for more information (see Preface, After-sale Support).

Support the leveling device over the open container with a ringstand. Stagger the tubes in the leveling device so one tube is submerged in the vessel fluid, and the other tube is level with the fluid surface. Connect the deeper tube to the PUMP OUTLET and the shorter tube to the PUMP INLET.

Adjust the flow rate using the accessory flow control valve connected to the PUMP OUTLET, or by partially restricting the outlet tubing. When properly adjusted, the pump inlet will draw an occasional air bubble to prevent over flow, and the pump outlet will force fluid through the submerged tube to prevent aeration of the vessel.

To avoid siphoning the bath work area when the unit is shut off, lift the leveling device out of the vessel and above the level of the unit.

Circulating through two closed loops

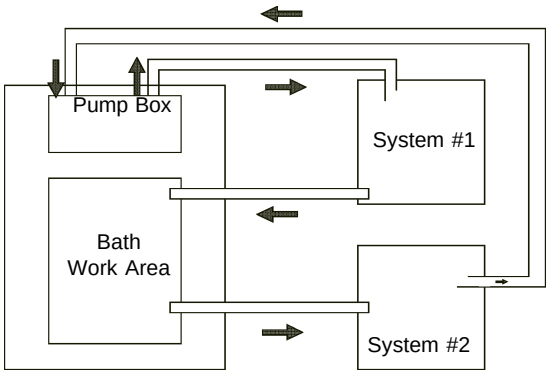

Bath (Top View)

The pump can be used to circulate through two closed loop systems. Connect the shortest practical length of flexible tubing from the PUMP OUTLET to the inlet of external system #1. Connect the outlet of system #1 directly into the bath work area. Connect tubing from the bath work area to the inlet of system #2. Connect the outlet of system #2 to the PUMP INLET.

Drain



Ensure the temperature of the bath fluid is safe before draining the unit.

The unit is equipped with a drain located at the back of the unit at the base of the bath. The drain has ¼ inch male pipe threads and is capped with a stainless steel plug. To drain the reservoir simply remove the cap.

To assure proper fit when replacing the cap, be sure to line the threads with Teflon® tape.

Fluids



Never use flammable or corrosive fluids with this unit.

The selected fluid must have a viscosity of 50 centistokes or less at the lowest operating temperature.

Tap water is the recommended fluid for operation from +8°C to +80°C.

For operation from +8°C to -30°C, a 50/50 mixture, by volume, of tap water and laboratory grade ethylene glycol is suggested.

Above +80°C and below -30°C, the user is responsible for fluids used.



Never use pure ethylene glycol as a bath fluid. A minimum 80/20 mixture of Ethylene Glycol and tap water is allowed.

Filling Requirements

The bath work area has a high and low level marker to guide filling. The markers are 1 inch horizontal slits located in the center of the stainless steel baffle separating the work area and the pump assembly. The correct fluid level falls between these two markers. The heating and cooling coils will be exposed and may become damaged if the correct fluid level is not provided.

When pumping to an external system, keep extra fluid on hand to maintain the proper level in both the circulating lines and the external system.



Never run the unit when the work area is empty.

Section IV Controllers

Controllers

Two standard temperature controllers are available with the unit: Analog and Digital. This section explains the installation and operation of the controllers.

Start Up

Before starting the unit, check all electrical and plumbing connections and make sure the work area has been properly filled with bath fluid.

To start 115V units press the I/O switch on the side of the controller to the **I** (power on) position. The pump will start and the POWER LED will light.

220V units have a circuit breaker instead of a switch. The circuit breaker is labeled **I** (power on) and **O** (power off). Ensure the circuit breaker is in the **I** position.

Two switches operate the REFRIGERATION system: ON/OFF and MIN/MAX. The REFRIGERATION switch should be ON for normal operation below 50°C. Above 50°C turn the REFRIGERATION switch ON only if you need a rapid cool-down.

We recommend you use MAX for operation between 0°C and 30°C.

MIN is for normal operation below 0°C and for maintaining temperature consistency in applications with low heat loads. MIN must be used for operation above 30°C.

The HEAT LED indicates the status of the heater. As the temperature of the fluid in the bath approaches the temperature setpoint, the lamp will cycle on and off to indicate the approximate duty cycle of the heater.

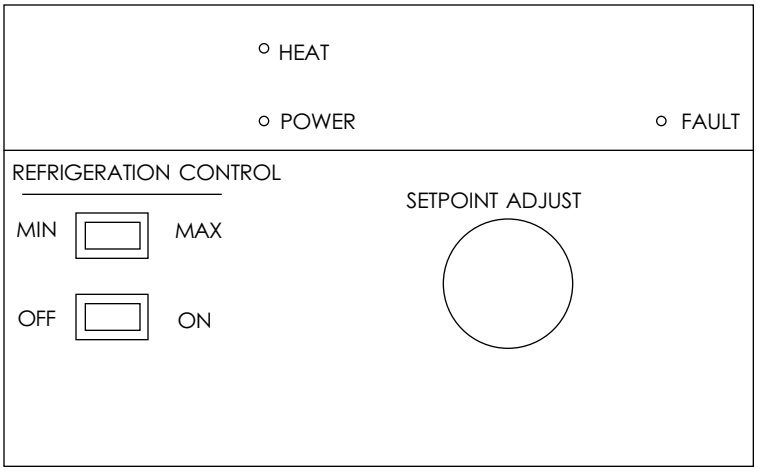

Analog Controller

Analog Temperature Adjustment
Units with Analog temperature controller are equipped with a glass tube thermometer. Insert the thermometer in the grommet located on the left side of the work area.

To adjust the bath temperature, turn the dial to the desired setpoint. Use the bath thermometer to make fine adjustments to the bath temperature.

When the unit is shut off wait approximately five minutes before restarting. This allows time for the refrigeration pressures to equalize. If the pressures are not allowed to equalize, the compressor will short-cycle (clicking sound) and no cooling will occur.

Digital Temperature Adjustment
To display the temperature setpoint, press the DISPLAY switch. To adjust the setpoint, press and hold the DISPLAY switch and turn the COARSE and FINE dials until the temperature setpoint is indicated on the LED display.

NOTE: Inadvertent movement of the COARSE and FINE dials, regardless of the position of the DISPLAY switch, will result in a change of the setpoint. The change will not be immediately reflected on the LED display unless the DISPLAY switch is pressed. The display will eventually change as the unitre-sponds to the new setpoint.

When the unit is shut off wait approximately five minutes before restarting. This allows time for the refrigeration pressures to equalize. If the pressures are not allowed to equalize, the compressor will short-cycle (clicking sound) and no cooling will occur.

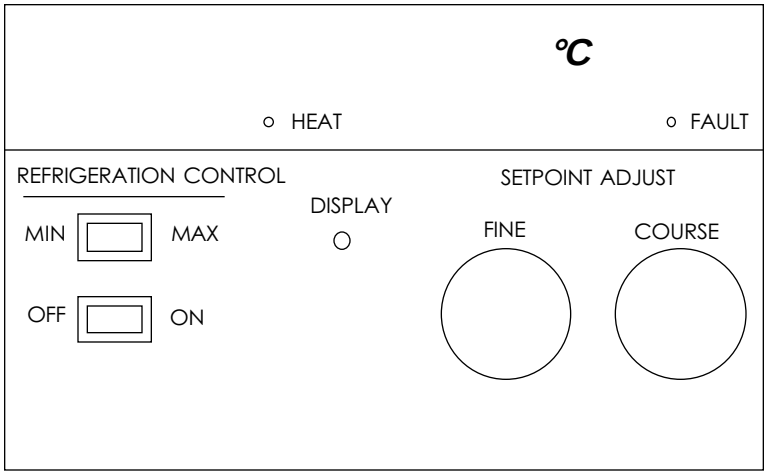

Digital Controller

RTE-221 Boost Heater

All RTE-221 models have a boost heater. The boost heater is designed to provide additional heat to the unit's large work area to aid rapid heating.

To start the heater place the BOOST HEAT switch, located on the front of the temperature controller, to the ON position. Even though the switch automatically returns to the OFF position, the boost heater will start to function. (You can verify this by observing the fluid temperature rising.) The boost heater automatically ceases operation when the setpoint is reached.

If the REFRIGERATION switch is ON, placing the BOOST HEAT switch to ON automatically turns the refrigeration system off. The refrigeration system will restart once the boost heater turns off. Therefore, if you do not require the refrigeration system, the REFRIGERATION switch should be placed to OFF before turning the boost heater on.

Autorefill (Optional)

An optional autorefill device is designed to maintain the correct level of cooling fluid in the reservoir. The device consists of a float switch and a solenoid valve. If the cooling fluid level falls, the float switch will open the solenoid valve and allow make-up fluid to fill the reservoir. Once the cooling level reaches the proper level, the float switch will rise and the solenoid valve will close.

The plumbing connection for the autorefill device, labeled WATER INLET, is located on the rear of the autorefill assembly. The connection is 3/8 inch OD stainless steel. Remove the nut and install the tubing from your make-up fluid source. Reinstall the nut and tubing on to the connection.

Tubing is available from NESLAB. Contact our Sales Department for more information (see Preface, After-sale Support).

The autorefill device requires its own source of electrical power. The connector for the line cord (provided with the assembly) is also located on the rear of the autorefill device. The connector is labelled POWER.

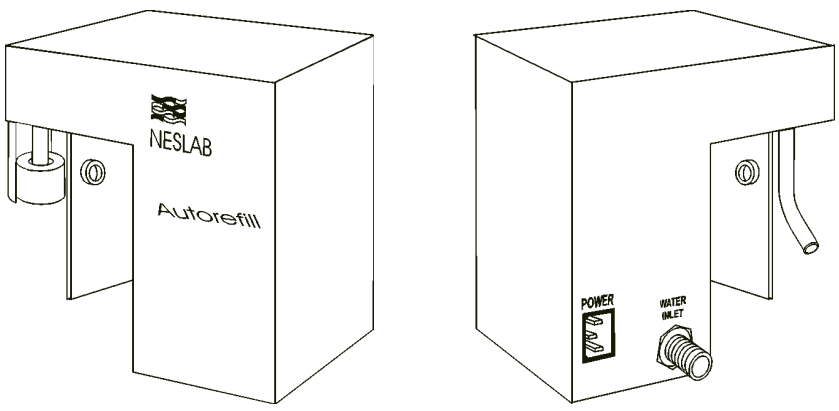

Autorefill Device

High Temperature/ Low Liquid Level Safety

To protect your application, the adjustable High Temperature/Low Liquid Level Safety (HIGH TEMP/LOW LEVEL) ensures the heater will not exceed temperatures which can cause serious damage to your unit. A single temperature sensor, located on the heater coils in the bath, monitors both conditions. A High Temperature/Low Liquid Level fault occurs when the temperature of the sensor exceeds the set temperature limit.

In the event of a fault, the unit will shut down. The cause of the fault must be identified and corrected before the unit can be restarted.

The safety on single heater systems is not preset and must be adjusted during initial installation.

Units with a boost heater have an additional nonadjustable safety located behind the main safety. It has a red reset button but no adjustment knob.

To set the safety, locate the HIGH TEMP/LOW LEVEL SAFETY adjustment dial on the right side of the pump box. Turn the dial fully clockwise and press the red RESET switch located next to the adjustment dial. **NOTE:** On units without a reset switch turn the I/O switch off then back on.

Start the unit. Adjust the setpoint for a few degrees higher than the highest desired fluid temperature and allow the bath to stabilize at the temperature setpoint. Turn the HIGH TEMP/LOW LEVEL SAFETY dial counter-clockwise until you hear a click and the unit shuts down. The red FAULT LED on the temperature controller will light to indicate a fault has occurred.

Cool the bath and then, without moving the adjustment dial, press the red RESET switch or turn the I/O switch off then back on.

NOTE: For units with a reset switch, the minimum high temperature safety setting is 50°C. For units without a reset switch the safety has a temperature range of 0°C to 180°C.

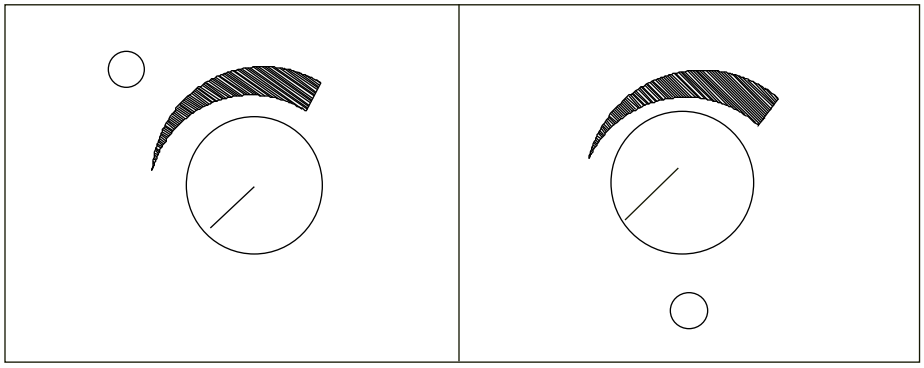

High Temperature/Low Liquid Level Safety Options
(Some units do not have a reset switch.)

15-Pin Accessory Connector

Digital units are equipped with a 15 pin D-subminiature female receptacle on the right side of the power box. An ENABLE/DISABLE switch is located just below the receptacle. Place the switch to the ENABLE position to control the bath via the receptacle connection. (The sensor temperature and setpoint, pin 7 and 8, can be read with the switch in either position.) The pin-out information is listed below.

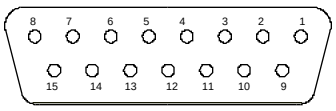

15 pin D-subminiature female receptacle

Pin #	Function
1	Chassis ground.
2	No connection.
3	Span +. Indicates the maximum setpoint value the unit can be set to operate. The temperature scale is 10mV/°C, referenced to analog ground, pin 6 (example: +350mV = +35.0°C).
4	Span -. Indicates the minimum setpoint value the unit can be set to operate. The temperature scale is 10mV/°C, referenced to analog ground, pin 6 (example: +50mV = +5.0°C).
5	No connection.
6	Analog ground. The analog ground is physically separated from the power ground throughout the unit. To prevent offsets that result from ground currents, the analog and power grounds are only connected at the unit's power supply. Analog ground should only be used as a reference pin.
7	Sensor temperature (current limited through 2.7K OHM resistor). The fluid temperature, as measured by the controller's sensor located in the reservoir, can be read at this pin. The temperature scale is 10mV/°C, referenced to analog ground, pin 6 (example: +150mV = +15.0°C).
8	Setpoint out. The present temperature setpoint can be read at this pin. The temperature scale is 10mV/°C, referenced to analog ground, pin 6 (example: +150mV = +15.0°C).
9	Power Ground.
10	No connection.
11	No connection.
12	Digital display (input only). An external voltage can be displayed on the operator panel digital display by applying the voltage to this pin. The display has a low input resistance and a full scale rating of ±1.99VDC. Input is referenced to analog ground, pin 6. The maximum voltage applied to the display should be limited to ±2VDC.
13	- 5V. Power supply of -5VDC (15mA maximum).
14	+5V. Power supply of +5VDC (50mA maximum).
15	Setpoint in. The temperature setpoint can be controlled by applying a known voltage to this pin. The temperature scale is 10mV/°C, referenced to analog ground, pin 6 (example: +230mV = +23.0°C).

NOTE: With the switch in the ENABLE position and no input to pin 15, the bath will slowly go to the setpoint value set on the digital controller.

Section V Maintenance



To avoid electrical shock, disconnect the mains cord prior to removing any access panels or covers.

Service Contracts

NESLAB offers on-site Service Contracts that are designed to provide . extended life and minimal down-time for your unit. For more information, contact our Service Department (see Preface, After-sale Support).

Condenser

For proper operation, the unit needs to pull substantial amounts of air through a condenser. A build up of dust or debris on the fins of the condenser will lead to a loss of cooling capacity.

Periodic vacuuming of the condenser is necessary. To access the condenser the front grille must be removed.



The unit must be turned off before the front panel is removed.

RTE-111 units have a one-piece grille assembly. Pull forward to remove.

RTE-211 and RTE-221 units have a two piece grille assembly. First remove the left (blue-colored) section by simply pulling it forward. Pull forward on the remaining (white-colored) section to remove it.

The frequency of cleaning depends on the operating environment. After initial installation, we recommend a monthly visual inspection of the condenser. After several months, the frequency of cleaning will be established.

Reservoir Cleaning

Routine cleaning can be achieved by simply sponging down the seamless stainless steel tank with tap water. (Dish washing detergent may be used but the tank must be thoroughly rinsed.)

To gain access to the entire reservoir the pump box and reservoir cover should be removed.

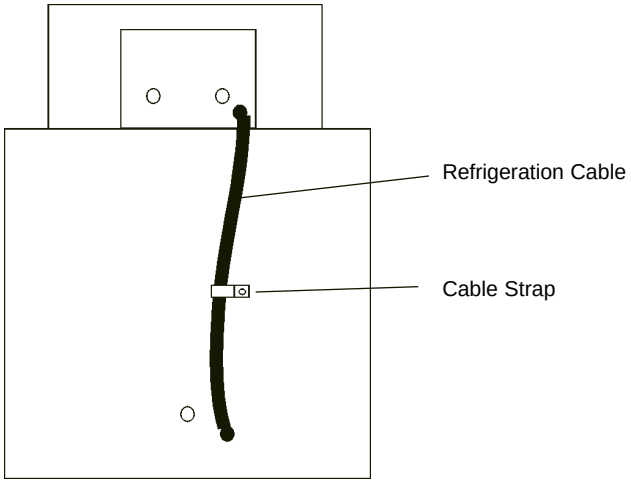

Remove the line cord from the rear of the unit and then remove the four screws (two on each side) securing the reservoir's cover.

To get slack on the refrigeration cable, remove the cable strap. The cable itself does not need to be disconnected.

Turn the cover assembly over and carefully place it on a supporting platform.

Algae

To restrict the growth of algae in the bath, we recommend the bath cover be kept in place and that all circulation lines be opaque. This will eliminate the entrance of light required for the growth of most common algae.

NESLAB recommends the use of Chloramine-T, one gram per gallon.

Section VI Troubleshooting

Checklist

Unit will not start

Make sure the voltage of the power source meets the specified voltage, ±10%. Refer to the serial number label on the rear of the unit to identify the specific electrical requirements of your unit.

Check the High Temperature/Low Liquid Level Safety. If the FAULT light is on, make sure the fluid level in the bath is between the marks in the baffle and the HIGH TEMP/LOW LEVEL SAFETY setting is greater than the fluid temperature. Push the RESET switch(es), or, for units without reset switches, turn the I/O switch off then back on, and attempt to restart.

Loss of cooling capacity

Check the position of the REFRIGERATION switch.

Be sure the cooling capacity of the unit has not been exceeded if circulating to an external system.

When the unit is shut off, wait approximately five minutes before restarting. This allows time for the refrigeration pressures to equalize. If the pressures are not allowed to equalize, the compressor will short-cycle (clicking sound) and no cooling will occur.

Proper ventilation is required for heat removal. Make sure ventilation through the front and rear panels is not impeded and the panels are free of dust and debris.

Ice build up on the cooling coils can act as insulation and lower the cooling capacity. Raise the temperature of the bath to de-ice the cooling coil and increase the concentration of non-freezing fluid.

No external circulation

Check for obstructions, kinks, or leaks in the circulation tubing.

Circulation will cease when the pump head has been exceeded.

Service Assistance and Technical Support

If, after following these troubleshooting steps, your unit fails to operate properly, contact our Customer Service Department for assistance (see Preface, After-sale Support). In addition to arranging warranty service, our Service Department can provide you with a wiring diagram and a complete list of spare parts for your unit. Before calling, please obtain the following:

Part number
Serial number
Voltage of unit
Voltage of power source

Appendix A International Quick Reference Guides

RTE - Serie Kurzbedienungsanleitung

Installation

Das Gerät verfügt über ein luftgekühltes Kühlsystem. Die Luft wird an der Vorderseite angesaugt und strömt an der Rückseite aus. Das Gerät muß so plaziert werden, daß der Luftstrom nicht behindert wird. Bei ungenügender Ventilation wird die Kühlleistung reduziert und kann in extremen Situationen zu einem Ausfall des Kühlsystems (Kompressors) führen.

Aufstellorte mit hoher Staubentwicklung sollten vermieden werden, und es sollte eine regelmäßige Reinigung des Gerätes durchgeführt werden. Um einwandfrei zu funktionieren, muß das Gerät große Luftmengen durch den Kondensor ansaugen. Bei Staub- und Schmutzablagerungen auf dem Kondensorheizkörper kommt es zu einem Verlust von Kühlleistung.

Das Gerät behält seine maximale Kühlleistung bis zu einer Umgebungstemperatur von ca. +24°C.

Vergewissern Sie sich, daß die Spannung Ihrer Stromanschlüsse mit der für das Gerät vorgesehenen Spannung übereinstimmt (± 10%).

Die Schlauchanschlüsse (1/4 Zoll MPT) des Gerätes befinden sich an der Rückseite und sind mit PUMP INLET und PUMP OUTLET bezeichnet. Entfernen Sie die Kappen, falls externe Zirkulation gewünscht wird. Schließen Sie den PUMP OUTLET-Anschluß an den Eingang Ihres Instruments und den PUMP INLET-Anschluß an den Ausgang Ihres Instruments an.

Füllen Sie das Reservoir bis zu einem Stand, der zwischen den horizontalen Markierungen liegt, die auf dem Blech markiert sind, das den Arbeitsbereich von der Pumpeneinheit trennt.

Verwenden Sie niemals entflammbare oder Korrosion verursachende Flüssigkeiten. Die gewählte Flüssigkeit muß eine Viskosität von maximal 50 Centistokes bei der niedrigsten möglichen Arbeitstemperatur haben. Für den Betrieb im Arbeits-Temperaturbereich von +8°C bis +80°C empfiehlt NESLAB Leitungswasser als Kühlmittel.

Wenn sie zu einem externen System zirkulieren, sollten Sie zusätzliche Kühlflüssigkeit zur Hand haben, um den Kühlflüssigkeitsstand in den Zirkulationsleitungen und dem externen System beibehalten zu können.

Betreiben Sie das Gerät niemals mit leerem Arbeitsbereich!

Inbetriebnahme

Vor Inbetriebnahme des Gerätes vergewissern Sie sich bitte, daß die elektrischen Anschlüsse und die Rohr- u. Schlauchanschlüsse sachgemäß installiert sind und daß das gesamte System mit Kühlflüssigkeit gefüllt ist.

Geräte, die bei 220 Volt betrieben werden, verfügen über einen Stromkreisunterbrecher auf der Rückseite des Gerätes. Vergewissern Sie sich, daß dieser auf ON gestellt ist. Um das Gerät einzuschalten, müssen Sie den I/O-Schalter auf „I“ stellen. Die Power-Lampe leuchtet auf, wenn das Gerät in Betrieb ist. Um das Gerät abzuschalten, muß der I/O-Schalter auf „O“ gestellt werden.

Bei Normalbetrieb unter +50 °C sollte der REFRIGERATION-Schalter auf ON gestellt werden. Die MIN-Einstellung ist für den Normalbetrieb bei unter 0 °C und bei +30 °C bis +50 °C. Verwenden Sie die MAX-Einstellung beim Betrieb bei 0 °C bis +30 °C.

Die HEAT-LED-Anzeige zeigt den Status des Heizelements an. Sie leuchtet auf, wenn das Heizelement arbeitet. Wenn die Arbeitstemperatur den gewünschten Setpoint erreicht, blinkt die LED-Anzeige, um den ungefähren Arbeitsrhythmus des Heizelements anzuzeigen.

Nach dem Ausschalten des Gerätes sollten Sie vor dem Wiedereinschalten ca. 5 Minuten warten, damit das Kühlsystem einen Druckausgleich durchführen kann. Beachtet man diese Wartezeit nicht, kommt es zu kurzen Schaltfrequenzen des Kompressors und eine Kühlung ist nicht möglich.

Einstellung der Analog-Temperatursteuerung

Um die Temperatur einzustellen (setpoint), drehen Sie den SETPOINT ADJUST-Schalter an der Vorderseite des Gerätes auf die gewünschte Temperatur.

Einstellung der Digital-Temperatursteuerung

Um sich den Temperatur-Setpoint anzeigen zu lassen, drücken Sie den DISPLAY-Schalter und halten Sie ihn gedrückt. Um den Temperatur-Setpoint einzustellen, drücken Sie den Display-Schalter, halten diesen, und drehen gleichzeitig den SETPOINT ADJUST-Schalter so lange, bis die gewünschte Temperatur in der Digitalanzeige angezeigt wird. Wenn die Temperatur eingestellt ist, lassen Sie den Display-Schalter los. Die Digitalanzeige zeigt dann die Temperatur der Kühlflüssigkeit im Reservoir an.

Wartung
Überprüfen Sie regelmäßig die Kühlflüssigkeit im Reservoir. Sollte eine Säuberung notwendig sein, spülen Sie das Reservoir mit einer speziellen Reinigungsflüssigkeit, die mit dem Umlaufsystem und der Kühlflüssigkeit kompatibel ist.

Das Kühlmittel sollten Sie regelmäßig erneuern. Wenn Sie das Gerät bei niedrigen Temperaturen betreiben, erhöht sich mit der Zeit der Wasseranteil in der Kühlflüssigkeit. Dies führt zum Verlust von Kühlkapazität.

Vor Ersetzen der Kühlflüssigkeit erhöhen Sie bitte die Betriebstemperatur des Gerätes so weit, daß die Kühlspulen eisfrei sind.

Regelmäßiges Absaugen des Kondensor-Heizkörpers ist erforderlich. Die Reinigungshäufigkeit hängt von der Betriebsumgebung ab. Eine monatliche Überprüfung des Kondensors ist empfehlenswert. So werden Sie nach einigen Monaten einen Reinigungsrhythmus gefunden haben.

RTE Kvik referance.

Installation:
Opstilles i rene omgivelser. Dette system er luftkølet, og luften trækkes ind forfra og udledes bagtil, sørg derfor for god cirkulation om instrumentet.

Steder med meget støv skal undgåes, og periodisk rensning skal udføres, hvis utilsigtet nedbrud skal undgås. Opbygning af støv vil medføre fald i kølekapasiteten og i værste fald overophedning af systemet.

Check at netspændingen er den nominelle 240V +/ - max. 10% og temperatur max. 24^0 C ved optimal udnyttelse.

Slangetilgang er på bagsiden mærket „Pump inlet“ til indgang på dit emne og „Pump outlet“ på udgangen.

Ledningsvand (ionbyttet) kan anvendes mellem +8 til 80^0 C, under $+8^0$ C skal væsken blandes op med ethylenglycol.

Fyldning af reservoiret foregår ved at fjerne panelet, som er forsynet med fingerskruer, og påfyld egnet rent kølevæske, max 5 cm fra toppen.

Betjening:
Før opstart checkes elektriske forbindelser, slangeforbindelser og væskestand.
„REFRIGERATION“ skal være tændt under 50^0 C.
MIN positioner er normalt under 0^0 C, max fra 0^0 C til 30^0 C.

Analog temperatur kontrol:
Drej på knappen mærket C til den rigtige temperatur.

Digital temperatur kontrol:
Setpunktet vises ved at holde „Display“ tasten inde, skal temperaturen ændres drejes herefter på „Adjust“ knappen. Slip „Display“ knappen og aktuel temperatur vises.

Flow kontrol:
Drej på „RECIRCULATING FLOW CONTROL“ + for at åbne og - for at lukke.

Periodisk vedligeholdelse:
Check standen af væske periodisk. Check med mellemrum vakuumet på pumpesiden, rens systemet og check for aflejringer, vækst, utætheder, check vakuumpumpen med kondenser og evt. filtre. Husk åben aldrig instrumentet uden strømmen er afbrudt, og strømkablet er taget ud!

RTE, Handleiding voor snelle installatieprocedure

Installatie
Het apparaat heeft een luchtgekoeld koelsysteem. Lucht wordt aangezogen aan de voorkant van het apparaat en weer vrijgegeven via de achterkant. Plaats het apparaat op een dusdanige manier dat luchttoevoer en afvoer niet worden belemmerd. Inadequate ventilatie kan leiden tot afname van van koelcapaciteit en, in extreme gevallen, tot het niet functioneren van de compressor.

Het is aan te raden stoffige ruimtes te vermijden en de condensor regelmatig schoon te maken. Voor een optimale werking dient via de condensor een voldoende hoeveelheid lucht te circuleren. Een opeenhoping van stof en vuil op de condensor kan leiden tot een verlies van koelcapaciteit.

Het apparaat behoudt haar integrale capaciteit bij een omgevingstemperatuur tot ongeveer +24°C.

Let erop dat de netspanning gelijk is aan het aangegeven voltage, +/- 10%.

De slangaansluitingen zijn bevestigd aan de achterkant van het apparaat en zijn voorzien van het label PUMP INLET en PUMP OUTLET. Deze aansluitingen zijn een 1/4 inch MPT. Verwijder de pluggen indien externe circulatie gewenst is. Bevestig de PUMP OUTLET aan de ingang van uw applicatie. Bevestig de PUMP INLET plug aan de uitgang van uw applicatie.

Vul het reservoir tot het volgende niveau: tussen de horizontale markeringen op de roestvrijstalen scheidingsplaat, die de werkruimte van het pompgedeelte scheidt.

Gebruik nooit brandbare of andere koelvloeistoffen, die het toestel kunnen aantasten. De vloeistof die u gaat gebruiken moet een viscositeit hebben van 50 centistokes of minder bij lage temperatuurwerking. Kraanwater wordt in het algemeen aanbevolen wanneer men met temperaturen werkt van +8°C. tot +80°C.

Wanneer men wil circuleren naar een extern systeem, dient u altijd extra vloeistof achter de hand houden om het juiste vloeistofniveau , zowel in het interne als het externe gedeelte van het systeem, te handhaven.

Gebruik het apparaat nooit wanneer het reservoir leeg is.

Operationeel gebruik
Alvorens het apparaat in gebruik te nemen, dient u eerst alle elektrische- en slangaansluitingen te controleren. Tevens dient u te controleren of het systeem gevuld is met koelvloeistof.

220 Volt apparaten hebben een z.g. “circuit breaker” aan de achterkant van het apparaat. Controleer of deze in werking is gesteld. Om het apparaat te starten, gelieve de de I/O knop aan de zijkant van het apparaat te draaien naar de I positie. Het lampje zal oplichten als indicatie dat het systeem in werking is gesteld. Om het apparaat uit te zetten, gelieve de I/O knop naar de O positie te draaien.

Voor dagelijks gebruik , dient de “REFRIGERATION” knop op “ON” te staan voor temperaturen beneden de 50°C. De “MIN” positie wordt gebruikt voor een normaal arbeidsproces beneden de 0°C. en van 30°C. tot 50°C. Gebruik de “MAX” positie voor temperaturen van 0°C. tot 30°C.

Het “HEAT LED” duidt de actuele status van het verwarmings-element aan. Het zal oplichten indien het verwarmingselement in werking is gesteld. Als de ingestelde temperatuur de setpoint heeft bereikt, zal de LED aan en uit gaan om het proces van de heater aan te duiden.

Wanneer het apparaat uitgeschakeld is, gelieve 5 minuten te wachten alvorens u het apparaat weer in werking stelt. Deze tijd is nodig om de koeldruk gelijk te stellen. Indien dit niet gebeurt, zal short-cycle binnen de compressor optreden (klikkend geluid) en er vindt geen koeling plaats.

Analog Controller Temperature Adjustment
Om de temperatuur setpoint aan te passen, draai de Setpoint adjust knop aan de voorkant van het apparaat naar de gewenste temperatuur.

Digital Controller Temperature Adjustment
Om de temperatuur setpoint af te kunnen lezen, houdt u de “DISPLAY” knop ingedrukt. Om de temperatuur setpoint aan te passen, houdt u de “DISPLAY” knop ingedrukt en draait u de “SETPOINT ADJUST” knop, totdat de gewenste temperatuur setpoint af te lezen is van de display. Als de setpoint is aangepast, kunt u de “DISPLAY” knop weer loslaten. De display zal nu de temperatuur weergeven van het koelvloeistof in het reservoir.

Periodiek Onderhoud
De vloeistof in het reservoir dient regelmatig gecontroleerd te worden. Indien reiniging noodzakelijk is, zal het reservoir schoongespoeld moeten worden met een vloeistof, welke verenigbaar is met het koelsysteem en de koelvloeistof.

De koelvloeistof dient regelmatig vervangen te worden. Wanneer u werkt bij lage temperaturen, zal de concentratie van het water in de koelvloeistof gedurende die periode toenemen, wat kan leiden tot verlies van koelcapaciteit.

Alvorens u de koelvloeistof vervangt, dient u de operationele temperatuur van het apparaat te verhogen om de koelspiralen vrij te maken van ijs.

Het periodiek reinigen van de condensor is noodzakelijk. Het aantal malen dat dit moet gebeuren hangt af van de omgeving waar het apparaat staat opgesteld en wordt gebruikt. Wij raden een algemene maandelijkse inspektie van de condensor aan na de installatie. Na enkele maanden zal duidelijk zijn hoe vaak men het apparaat dient te reinigen.

Kortfattad Bruksanvisning för RTE serie

Installation
Maskinen har ett luft kylt kylnings system. Luft tas in på framsidan av maskinen och släpps ut på sidan och baksidan av maskinen. Ställ maskinen så att intaget och uttaget inte är blockerade. Otillräcklig ventilation leder till minskad kylningskapacitet och i vissa fall kan kompressorn gå sönder.

Undvik dammiga områden och rengör maskinen periodvis. För att fungera ordentligt måste mycket luft passera genom kondensorn. Damm och smuts i kondensorn leder till minskad kylnings kapacitet.

Maskinen har full kylningskapacitet upp till en temperatur av +75°F (24°C).

Röranslutning finns på baksidan av maskinen och har följande beskrivning: SUPPLY och RETURN. Anslutningarna är 1/4 inch MPT. Ta bort de skyddande plast bitarna från röranslutningarna. Anslut SUPPLY kopplingen till intaget av din anordning och RETURN kopplingen till uttaget.

Lösgör skruvarna och ta bort luckan för att fylla tanken. Ta bort tank pluggen och fyll tanken med ren kylnings vätska.

Använd aldrig eldfarliga eller frätande vätskor. Vätskan måste ha en viskositet av 50cST eller mindre vid den lägsta användnings temperaturen. Vanligt kran vatten är den rekommenderade vätskan vid en temperatur mellan +8°C och +80°C. Under +8°C måste en vätska som inte fryser användas. En blandning av vanligt vatten och etylenglykol (laboratorie kvalitet) föreslås.

Ha extra vätska redo om din anordning kräver det så att den rätta nivån behålls i cirkulations sytemet.

Användning
Kontrollera alla elektriska och alla rör anslutningar innan maskinen startas. Se till att cirkulations systemen har fyllts med vätska.

220V maskiner har en ström brytare på baksidan av maskinen. För att starta maskinen, sätt I/O knappen på sidan av maskinen på I. Lampan lyser för att visa att maskinen är på. Sätt knappen på O för att stänga av den.

Under normal användning bör REFRIGERATION knappen vara på när maskinen används under 50°C. MIN används när temperaturen är under 0°C och mellan 30°C och 50°C. Använd MAX från 0°C till 30°C.

Sätt start knappen på ON för att starta maskinen. COOL och IDLE på framsidan visar statusen på kylningssystemet. Cool lyser när värme tas bort från köldmedlet. När temperaturen närmar sig den förbestämda önskade temperaturen kommer de två att växla.

Efter att maskinen stängts av, vänta 5 minuter innan maskinen sätts på igen för att låta kylningstrycken att utjämnas. Ingen kylning kommer att utföras om inte trycken tillåts att utjämnas.

Analog Kontroll, Temperatur Ändring
För att ändra den önskade förbestämda temperaturen, vrid °C knappen på framsidan av maskinen tills den önskade temperaturen är nådd.

Digital Kontroll, Temperatur Ändring
Håll Display knappen intryckt för att visa den önskade temperaturen. Håll Display knappen intryckt och vrid Adjust knappen för att ändra den önskade temperaturen. Släpp Display knappen efter att den önskade temperaturen visas på kontroll panelen. Temperaturen på vätskan i tanken visas nu på kontroll panelen.

Periodiskt Underhåll
Inspektera vätskan i tanken periodiskt. Om rengöring är nödvändigt, spola tanken med en rengörings vätska som är förenlig med cirkulationssystemet och kylvätskan.

Kylvätskan bör bytas periodvis. När enheten används vid låga temperaturer kommer vätskans koncentration av vatten att öka vilket leder till minskad kylningskapacitet.

Periodisk rengöring av kondensorn är nödvändig. Hur ofta rengöring är nödvändig beror på miljön. Vi rekommenderar en visuell inspektion av kondensorn varje månad.

NOTICE D'UTILISATION

BAINS RTE

INSTALLATION

Ces appareils ont un condenseur refroidi par air. L'air est aspiré sur le devant et rejeté à l'arrière et sur les côtés Positionner l'appareil afin que l'admission et l'émission ne soient pas obstruées. Une ventilation insuffisante serait la cause d'une réduction de la capacité de refroidissement, voir, d'une défaillance du compresseur.

Une zone excessivement poussièreuse; un nettoyage périodique est recommandé. En mode de fonctionnement, l'appareil aspire de l'air à travers le condenseur. De la poussière et des particules sur la grille atténueraient sa capacité de refroidissement.

L'appareil conserve sa pleine puissance de refroidissement sur une plage de température allant de l'ambiante à + 24°C.

S'assurer que l'alimentation électrique soit celle requise à ±10%.

Les connections sont situées à l'arrière de l'appareil et sont étiquetées " PUMP INLET " et " PUMP OUTLET ". Ces connections sont en inox d'un diamètre 3/8eme de pouce. Retirer les embouts en inox si vous souhaitez recirculer. Enficher le connecteur " PUMP OUTLET " à l'entrée de votre équipement et le connecteur " PUMP INLET " à la sortie.

Remplir le réservoir à un niveau compris entre les deux graduations " maxi " et " mini ".

Ne pas utiliser de liquide inflammable, corrosif, ou dont la viscosité serait inférieure à 50 centistokes aux températures les plus basses. Pour un fonctionnement entre 8 et 80°C, l'eau du robinet est la plus indiquée. En phase d'amorçage (au début de la recirculation), rajouter rapidement du liquide. Ne jamais l'utiliser sans liquide ou en dessous du niveau minimum.

Ces bains sont équipés d'un robinet de vidange situé à l'arrière.

MISE EN ROUTE

Vérifier les connections électriques, les tuyaux d'eau ainsi que le niveau de remplissage.

Les modèles en 220V ont un interrupteur général à l'arrière. Vérifier qu'il est sur " on ", placer l'interrupteur sur la position 1. La pompe, ainsi que le système de réfrigération se mettent en route. Le controleur de température numérique indique la température dans le bain. Pour éteindre, mettre l'interrupteur sur la position 0.

Le témoin lumineux " heat " indique que le bain fonctionne en mode " chauffage ". Quand la température approche de celle souhaitée, la diode s'éteint et s'allume.

Après avoir éteint l'appareil, attendre au moins cinq minutes avant de le rallumer, pour un bon équilibrage des pressions. Autrement, le cycle au niveau du compresseur serait trop bref et le refroidissement n'aurait pas lieu.

REGLAGE DU CONTROLEUR DE TEMPERATURE ANALOGIQUE

Tourner le potentiomètre situé à l'avant jusqu'à ce que la température désirée coïncide avec la graduation.

REGLAGE DU CONTROLEUR DE TEMPERATURE NUMERIQUE

Pour afficher la température souhaitée, maintenir appuyé l'interrupteur et tourner le bouton de réglage jusqu'à ce que la température souhaitée soit affichée. Relâcher ensuite l'interrupteur. L'affichage indique alors la température du fluide dans le réservoir.

MAINTENANCE PREVENTIVE

Vérifier régulièrement le fluide dans le réservoir,

Changer de temps à autre le liquide utilisé,

En cas de nettoyage, rincer avec un produit de lavage compatible,

Aux basses températures, la concentration en eau a tendance à augmenter ce qui peut générer une perte de puissance de refroidissement,

Avant de changer de liquide, recirculer à une température plus élevée pour réchauffer le serpentin,

Nettoyer régulièrement selon les conditions de travail la grille d'aspiration du condenseur. Nous recommandons d'effectuer la première inspection du condenseur un mois après l'installation,

PROCEDIMIENTOS DE OPERACION DE REFERENCIA RAPIDA
PARA LA SERIE RTE

INSTALACION

La unidad tiene un sistema de refrigeración por aire. El aire es dirigido hacia el frontal de la unidad y se descarga por la parte trasera y lateral. Sitúe la unidad para no impedir la entrada y descarga. Una ventilación inadecuada causará una reducción en la capacidad de enfriamiento y, en casos extremos, un fallo en el compresor.

Deben evitarse las zonas excesivamente polvorientas y debe instituirse un calendario de limpiezas periódicas. Para un funcionamiento adecuado, la unidad necesita empujar una cantidad sustancial de aire a través de un condensador. Un cúmulo de polvo o residuos en las aletas del condensador ocasionaría una pérdida de capacidad de enfriamiento.

La unidad retendrá su capacidad completa en temperaturas ambiente de hasta aproximadamente + 24 ºC.

Asegúrese de que el voltaje de la fuente de energía sea igual que el voltaje especificado, +/- 10%.

Las conexiones de tuberías están situadas en la parte trasera de la unidad y están marcadas como PUMP INLET y PUMP OUTLET. Estas conexiones son 1/4" MPT. Saque las tapas cuando requiera circulación externa. Conecte el adaptador PUMP OUTLET a la entrada de su aplicación. Conecte el adaptador PUMP INLET a la salida de su aplicación.

Llene el reservorio a un nivel entre los marcadores horizontales situados en la puerta de acero inoxidable que separa la zona de trabajo de la bomba.

No utilice nunca fluidos inflamables o corrosivos. El fluido elegido debe tener una viscosidad de 50 centistokes o menos a las temperaturas de operación más bajas. Se recomienda agua corriente para funcionar entre + 8 ºC a + 80 ºC.

Cuando bombee a un sistema externo, tenga fluido extra a mano para mantener el nivel apropiado tanto en las lineas circulantes como en el sistema externo.

Nunca haga funcionar el instrumento con el área de trabajo vacía.

OPERACION

Antes de poner en marcha la unidad, compruebe todas las conexiones eléctricas y de tuberías. Asegúrese de que el sistema circulador se ha llenado con fluido.

Las unidades de 220 V. tienen un cortador de circuito en la parte trasera de la unidad. Asegúrese de que está en posición ON. Para poner en marcha la unidad, ponga el interruptor I/O situado en el lateral de la unidad en posición I. La lámpara Power se iluminará para indicar que el sistema está funcionando. Para apagarlo, ponga el interruptor de encendido en posición O.

Para operación normal, el interruptor REFRIGERATION debe estar en ON por debajo de 50 ºC. La posición MIN es para operación normal por debajo de 0 ºC y desde 30 ºC a 50 ºC. Utilice MAX de 0 ºC a 30 ºC.

El LED HEAT indica la situación del sistema del calentador. Se ilumina para indicar que el calentador está funcionando. A medida que la temperatura de funcionamiento se aproxima al punto fijado, el LED ciclará para indicar el ciclo de trabajo del calentador.

Cuando se apaga la unidad, espere aproximadamente cinco minutos antes de volver a ponerla en marcha. Esto da tiempo para que las presiones de refrigeración se ecualicen. Si no se permite ecualizarse las presiones, el compresor se cortocicuitará y no enfriará.

AJUSTE DE LA TEMPERATURA CON EL CONTROLADOR ANALOGICO

Para fijar el punto de ajuste de la temperatura, gire el dial ºC situado en el frontal de la unidad hasta la temperatura deseada.

AJUSTE DE LA TEMPERATURA CON EL CONTROLADOR DIGITAL

Para que el punto de ajuste de temperatura aparezca en pantalla, mantenga presionado el interruptor DISPLAY. Para fijar el punto de ajuste de temperatura, mantenga presionado el interruptor DISPLAY y gire el botón ADJUST hasta que la pantalla digital indique el punto de ajuste de temperatura deseado. Una vez fijado el punto de ajuste, suelte el interruptor DISPLAY. La pantalla indicará la temperatura del fluido en el reservorio.

MANTENIMIENTO PERIODICO

Inspeccione periódicamente el fluido del reservorio. Si es necesaria una limpieza, rocíe el reservorio con un fluido de limpieza compatible con el sistema de circulación y el fluido refrigerante.

Antes de cambiar el fluido refrigerante, suba la temperatura de operación de la unidad para descongelar los serpentines de refrigeración.

Es necesario un vaciado periódico de las aletas del condensador. La frecuencia de limpieza depende del entorno en que funciona el aparato. Recomendamos una inspección visual mensual del condensador después de la instalación inicial. Después de varios meses, quedará establecida la frecuencia de limpieza.

Appendix Programming Software

NEScom Software

The NESLAB Communications Software is a user friendly software that allows you to automate your temperature control process. The software includes a 3½" disk, Comprehensive Operator's Manual and a toll-free number to a trained technical staff.

NEScom Software allows you to write custom temperature programs for our Digital or Microprocessor based temperature control apparatus. Choose upper or lower temperature limits and monitor system status with an alarm. NEScom can also record your results on a user selectable graph. NesCom must be used with an IBM or 100% compatible computer.

Select from easy to use product icons.

Create graphs and charts.

Easily configure ramping functions which set the setpoint over time.

View pop-up alarm windows which display if an alarm condition occurred.

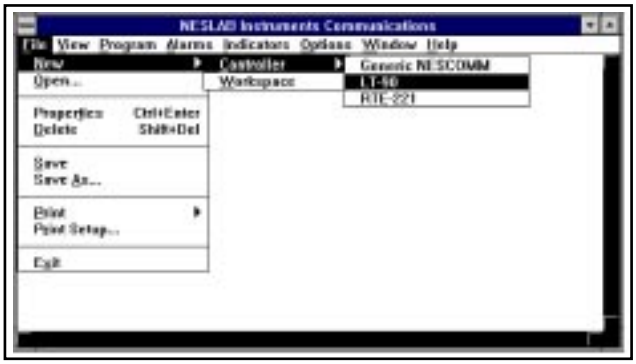

Select software functions from the easy to use pulldown menus.



View a virtual controller screen which allows remote monitoring and operation of product control panel.

DeltaTemp

DeltaTemp programming software is now available for free download from NESLAB ONLINE BBS (Bulletin Board System) at 603-427-2490.

DeltaTemp software allows you to write custom temperature programs for NESLAB digital units (any unit with a digital temperature readout AND a 10-15 pin INTERFACE port). The menu-driven program provides a table format for entering temperature parameters and a visual graph confirmation of the program you have designed. Program time can range from 0 to 999 minutes with unlimited looping. Choose upper and lower temperature limits and monitor system status with an audible alarm. DeltaTemp can also record your results on a printed graph or file. DeltaTemp is a DOS program, and requires an IBM or 100% compatible computer.

DeltaTemp may require use of a computer interface device, depending on which NESLAB unit is being used. Refer to the setup diagram in the DeltaTemp folder for full details.

To download the software, go to: CONFERENCES / SOFTWARE / DeltaTemp.

The folder also contains the operating manual, setup diagrams, application notes, and directions on making your own interface cable.

NESLAB ONLINE is a FirstClass® system accessible by general terminal software (Windows Terminal accessory, ClarisWorks Communications, Z-Term, Pro-Comm, or similar).

To use the full graphics and features of the BBS we recommend using FirstClass® Client software. FirstClass® Client is available for Macintosh or Windows platforms. It is available from many sources:

NESLAB ONLINE
Mac: Conferences/Software/Macintosh
Windows: Conferences/Software/Windows

AMERICA ONLINE
Mac: Computing/software center/mac communications forum/industry connection/softarc
Windows: Computing/software center/communications programs

COMPUSERVE:
Mac: TWEUROPA/Teletools/FCMAC.ZIP
Windows: PCBBS/BBS programs/FC300.EXE

WORLD WIDE WEB
http://www.softarc.com/try.htm

WARRANTY

NESLAB Instruments, Inc. warrants for 12 months from date of shipment any NESLAB unit according to the following terms.

Any part of the unit manufactured or supplied by NESLAB and found in the reasonable judgment of NESLAB to be defective in material or workmanship will be repaired at an authorized NESLAB Repair Depot without charge for parts or labor. The unit, including any defective part must be returned to an authorized NESLAB Repair Depot within the warranty period. The expense of returning the unit to the authorized NESLAB Repair Depot for warranty service will be paid for by the buyer. NESLAB's responsibility in respect to warranty claims is limited to performing the required repairs or replacements, and no claim of breach of warranty shall be cause for cancellation or recision of the contract of sales of any unit.With respect to units that qualify for field service repairs, NESLAB's responsibility is limited to the component parts necessary for the repair and the labor that is required on site to perform the repair. Any travel labor or mileage charges are the financial responsibility of the buyer.

The buyer shall be responsible for any evaluation or warranty service call (including labor charges) if no defects are found with the NESLAB product.

This warranty does not cover any unit that has been subject to misuse, neglect, or accident. This warranty does not apply to any damage to the unit that is the result of improper installation or maintenance, or to any unit that has been operated or maintained in any way contrary to the operating or maintenance instructions specified in NESLAB's Instruction and Operation Manual. This warranty does not cover any unit that has been altered or modified so as to change its intended use.

In addition, this warranty does not extend to repairs made by the use of parts, accessories, or fluids which are either incompatible with the unit or adversely affect its operation, performance, or durability.

NESLAB reserves the right to change or improve the design of any unit without assuming any obligation to modify any unit previously manufactured.

THE FOREGOING EXPRESS WARRANTY IS IN LIEU OF ALL OTHER WARRANTIES, EXPRESSED OR IMPLIED, INCLUDING BUT NOT LIMITED TO WARRANTIES OR MERCHANTABILITY AND FITNESS FOR A PARTICULAR PURPOSE.

NESLAB'S OBLIGATION UNDER THIS WARRANTY IS STRICTLY AND EXCLUSIVELY LIMITED TO THE REPAIR OR REPLACEMENT OF DEFECTIVE COMPONENT PARTS AND NESLAB DOES NOT ASSUME OR AUTHORIZE ANYONE TO ASSUME FOR IT ANY OTHER OBLIGATION.

NESLAB ASSUMES NO RESPONSIBILITY FOR INCIDENTAL, CONSEQUENTIAL, OR OTHER DAMAGES INCLUDING, BUT NOT LIMITED TO LOSS OR DAMAGE TO PROPERTY, LOSS OF PROFITS OR REVENUE, LOSS OF THE UNIT, LOSS OF TIME, OR INCONVENIENCE.

This warranty applies to units sold in the United States. Any units sold elsewhere are warranted by the affiliated marketing company of NESLAB Instruments, Inc. This warranty and all matters arising pursuant to it shall be governed by the law of the State of New Hampshire, United States. All legal actions brought in relation hereto shall be filed in the appropriate state or federal courts in New Hampshire, unless waived by NESLAB.

System III
Liquid to Liquid
Heat Exchanger

NESLAB Manual P/N 013736
Rev. 06/05/97

Instruction and Operation Manual

System III Liquid to Liquid Heat Exchanger Instruction and Operation Manual

Table of Contents

PREFACE

Compliance 3
Unpacking 3
Warranty 3
After-sale Support 3

SECTION I
Safety

Warnings 4

SECTION II
General Information

Description 5
Specifications 5

SECTION III
Installation

Site 7
Facility Water Requirements 7
Electrical Requirements 8
Voltage Selection 8
Plumbing Requirements 8
Fluids 9
Water Quality Standards and Recommendations 9
Filling Requirements 11
Automatic Refill Device (Optional) 11

SECTION IV
Operation

Start Up 12
Temperature Adjustment 12
Flow Control 13
Monitors 13
Fault Interlock Contact 13
Fault Response Modes 14
Pump Motor Overload Protector (Optional) 14

SECTION V
Maintenance& Service

Service Contracts 15
Pump Strainer 15
Facility Water Strainer 15
Algae 16
Configuration 16
Voltage Selection 16
Fault Selection 16
Pressure Relief Valve 17
Fuses 17
Phase Rotation 17

SECTION VI
Troubleshooting

Checklist 18
Service Assistance 19
Parts List 19

SECTION VII
Diagrams

Flow Diagram 20
Wiring Diagram 3Ø Units 21
Wiring Diagram 1Ø Units 21
Front View 22
Rear View 22

SECTION VIII
Warranty

..... 23

Preface

Compliance

Products tested and found to be in compliance with the requirements defined in the EMC standards defined by 89/336/EEC as well as Low Voltage Directive (LVD) 73/23/EEC can be identified by the CE label on the rear of the unit. The testing has demonstrated compliance with the following directives:

LVD, 73/23/EEC	Complies with UL 3101-1:93
EMC, 89/336/EEC	EN 55011, Class A Verification EN 50082-1:1992 IEC 1000-4-2:1995 IEC 1000-4-3:1994 IEC 1000-4-4:1995

For any additional information refer to the Letter of Compliance that shipped with the unit (Declaration of Conformity).

Unpacking

Retain all cartons and packing material until the unit is operated and found to be in good condition. If the unit shows external or internal damage, or does not operate properly, contact the transportation company and file a damage claim. Under ICC regulations, this is your responsibility.

Warranty

Units have a warranty against defective parts and workmanship for one full year from date of shipment. See back page for more details.

After-sale Support

NESLAB is committed to customer service both during and after the sale. If you have questions concerning the operation of your unit, contact our Sales Department. If your unit fails to operate properly, or if you have questions concerning spare parts or Service Contracts, contact our Service Department. Before calling, please obtain the following information from the unit's serial number label:

- *BOM number*_____
- *Serial number* _____

Section I Safety

Warnings

Make sure you read and understand all instructions and safety precautions listed in this manual before installing or operating your unit. If you have any questions concerning the operation of your unit or the information in this manual, contact our Sales Department.

Performance of installation, operation, or maintenance procedures other than those described in this manual may result in a hazardous situation and may void the manufacturer's warranty.

Observe all warning labels.

Never remove warning labels.

Never operate damaged or leaking equipment.

Always turn off the unit and disconnect the line cord from the power source before performing any service or maintenance procedures, or before moving the unit.

Always empty the reservoir before moving the unit.

Never operate equipment with damaged line cords.

Never operate without fluid.

Refer service and repairs to a qualified technician.

In addition to the safety warnings listed above, warnings are posted throughout the manual. These warnings are designated by an exclamation mark inside an equilateral triangle with text highlighted in bold print. Read and follow these important instructions. Failure to observe these instructions can result in permanent damage to the unit, significant property damage, or personal injury or death.

Section II General Information

Description

The System III Liquid to Liquid Heat Exchanger is designed to remove heat from water-cooled instruments.

The unit consists of a heat exchanger, recirculation pump, PVC reservoir, and an analog controller.

Specifications

Temperature Range	+5°C to +40°C
Temperature Stability	±1.0°C
Cooling Capacity[1]	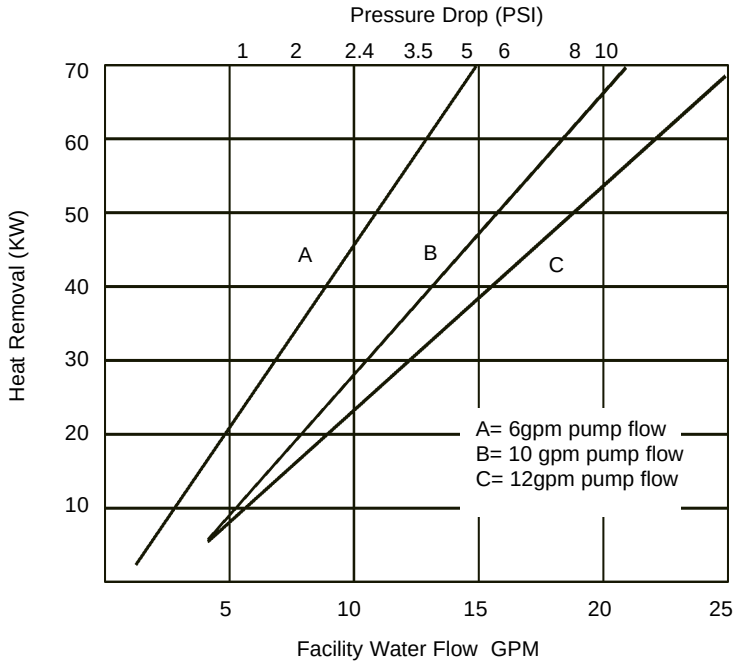

1. Cooling capacity is based in a 10°C difference between the temperature of the cooling water supply and the cooling fluid flowing from the System III to the instrument being cooled (see Section III, Facility Water Requirements). Pressure drop obtained with the System III modulating valve fully open.

Pump Capacity	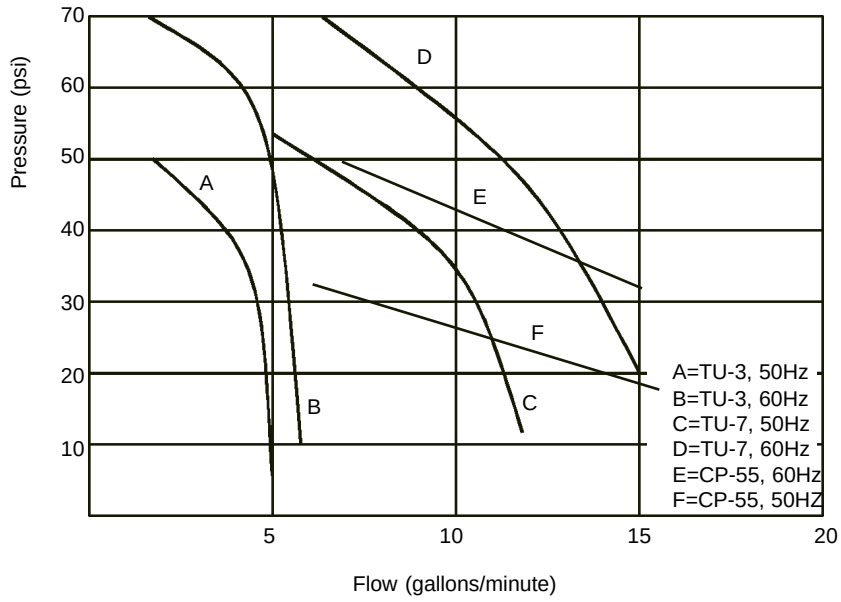
Reservoir Volume[2]	
Gallons	1.25
Liters	4.7
Dimensions[3]	
(H x W x D)	
Inches	20¾ x 17⅜ x 27
Centimeters	52.7 x 44.1 x 68.6
Shipping Weight[4]	
Pounds	206
Kilograms	93.4

2. Larger volume reservoirs are available.
3. Large volume units measure 32½ x 23 x 27 (82.5 x 58.4 x 68.6).
4. Large volume units weigh approximately 355 pounds (161 kilograms).

Section III Installation

Site

The unit should be located in a laboratory or clean industrial environment with easy access to a facility cooling water supply and a drain. Never place the unit in a location where excessive heat, moisture, or corrosive materials are present.

Refer to the pump label on the rear of the unit to identify the specific type of pump in your unit. Units with a TU-7, TU-8 or TU-9 pump are equipped with a pump motor fan. The fan is used to cool the pump motor and prevent the motor from overheating. Air is drawn through the front of the unit and is discharged through the rear of the unit. A minimum clearance of 6 inches (0.15 meters) at the front and rear of the unit is necessary for ventilation.

Facility Water Requirements

Refer to the Cooling Capacity chart in Section II, Specifications. The flow rate of the cooling water supply must meet or exceed these requirements for the unit to operate at its full rated capacity. If the cooling water does not meet these standards, the cooling capacity will be derated. The chart is based on a difference between the temperature of the cooling water supply (House Water) and the cooling fluid flowing from the System III to the instrument being cooled.

As the heat load increases, the required flow rate of the cooling water supply increases. For example, on a System III with a 6 gpm pump flow, if the heat load is 12 kilowatts, approximately 3 gpm of cooling water flow is required to remove the heat. However, if the heat load is increased to 36 kilowatts, about 8 gpm of cooling water flow is required.

The flow meter on the front of the unit does not measure the flow rate of the cooling water supply. The flow meter measures the flow rate of the cooling fluid returning to the instrument being cooled.

Electrical Requirements

Refer to the serial number label on the rear of the unit for the specific electrical requirements of your unit.

Ensure the voltage of the power source meets the specified voltage, ±10%.



The unit construction provides extra protection against the risk of electric shock by grounding appropriate metal parts. The extra protection may not function unless the power cord is connected to a properly grounded outlet. It is the user's responsibility to assure a proper ground connection is provided.

Voltage Selection

If the unit is to be operated from a 220 to 240V source, a voltage range selector switch inside the unit must be reset. See Service section for instructions on changing the voltage selector.

Plumbing Requirements

Before installing the unit to an instrument that previously used tap water as a cooling fluid, flush the instrument several times to remove any rust or scale that has built up. The manufacturer of the instrument should be able to recommend a cleaning fluid for their equipment.

The plumbing connections are located on the rear of the unit and are labelled FACILITY WATER and RECIRCULATING CLEAN FLUID. The top fittings are outlets and the bottom fittings are inlets.

These connections are 1 inch FPT.

A basket strainer is supplied with the unit to protect the heat exchanger from becoming clogged by dirty cooling water. Install this strainer on the FACILITY WATER inlet. A clogged strainer can adversely affect cooling capacity. See Section V, Facility Water Strainer for cleaning instructions.

Connect the FACILITY WATER connections to the cooling water supply and the drain.

Connect the RECIRCULATING CLEAN FLUID connections to the instrument being cooled.

Flexible tubing, if used, should be of heavy wall or reinforced construction. All tubing should be rated to withstand 80 psi at +40°C. Make sure all tubing connections are securely clamped. Avoid running tubing near radiators, hot water pipes, etc. If substantial lengths of tubing are necessary, insulation may be required to prevent the loss of cooling capacity.

Tubing and insulation are available from NESLAB. Contact our Sales Department for more information (see Preface, After-sale Support).

It is important to keep the distance between the unit and the instrument being cooled as short as possible, and to use the largest diameter tubing practical. Tubing should be straight and without bends. If reductions must be made, they should be made at the inlet and outlet of the instrument being cooled, not at the unit.

If substantial lengths of cooling lines are required, they should be pre-filled with cooling fluid before connecting them to the unit.

Fluids

Refer to the Water Quality and Recommendations section.

Tap water is the recommended cooling fluid.

Water Quality Standards and Recommendations

	Permissible(PPM)	Desirable(PPM)
Microbiologicals		
(algae,bacteria,fungi)	0	0
Inorganic Chemicals		
Calcium	<40	0.6
Chloride	250	<25
Copper	1.3	1.0
Iron	0.3	<0.1
Lead	0.015	0
Magnesium	<12	0.1
Manganese	0.05	<0.03
Nitrates\Nitrites	10 as N	0
Potassium	<20	0.3
Silicate	25	<1.0
Sodium	<20	0.3
Sulfate	250	<50
Hardness	17	<0.05
Total Dissolved Solids	50	10
Other Parameters		
pH	6.5-8.5	7-8
Resistivity	0.01*	0.05-0.1*

* Megohm-Cm (Compensated at 25C)

Unfavorably high total ionized solids (TIS) can accelerate the rate of galvanic corrosion. These contaminants can function as electrolytes which increase the potential for galvanic cell corrosion and lead to localized corrosion such as pitting which can be observed at the studs and on the outside surface of cooling coils. Eventually, the pitting will become so extensive that the coil will leak refrigerant into the water reservoir.

As an example, raw water in the United States averages 171 ppm (as NaCl). The recommended level for use in a water system is between 0.5 to 5.0 ppm (as NaCl).

Recommendation: Initially fill the tank with distilled/deionized water. Do not use untreated tap water as the total ionized solids level may be too high.

Maintain this water quality at a resistivity of between 1 to 10 megohm-cm (compensated at 25°C) by using a purification system. Although the initial fill may be as high as 10 megohm-cm (compensated at 25°C), the desired level for long time usage is 1 to 3 megohm-cm (compensated at 25°C).

The above two recommendations will reduce the electrolytic potential of the water and prevent or reduce the galvanic corrosion observed.

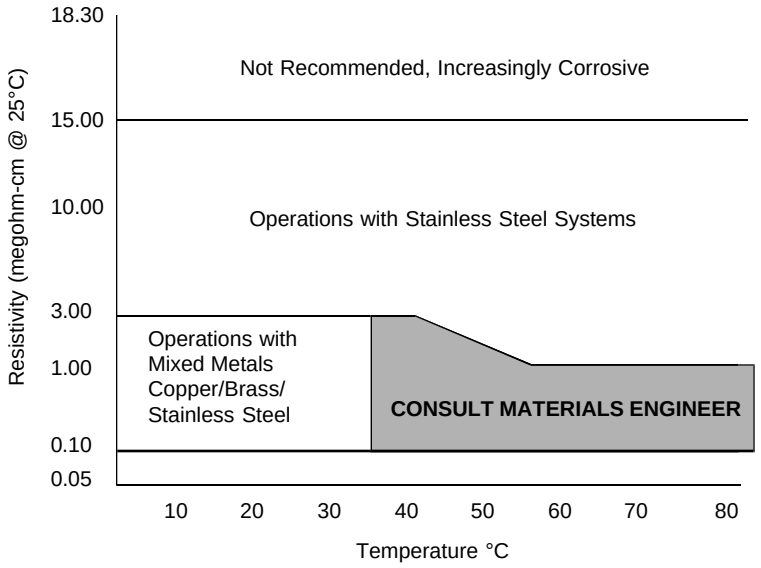

Water Quality Considerations

Filling Requirements

Remove the reservoir cover. Fill the reservoir with clean cooling fluid to within 1 inch of the top of the reservoir. Have extra cooling fluid on hand and follow the steps described in Section IV, Start Up.

Automatic Refill Device (Optional)

The automatic refill device maintains the correct level of cooling fluid in the reservoir. The device consists of a float switch in the reservoir and a solenoid valve at the rear of the unit. If the cooling fluid level falls, the float switch will drop, opening the solenoid valve and allowing make-up fluid to fill the reservoir. Once the cooling fluid reaches the proper level, the float switch will rise and the solenoid valve will close.

Connect the $^{3}/_{8}$ inch OD stainless steel barbed fitting on the solenoid valve to the make-up fluid source using $^{5}/_{16}$ or $^{3}/_{8}$ inch ID flexible tubing.

Tubing is available from NESLAB. Contact our Sales Department for more information (see Preface, After-sale Support).

Section IV Operation

Start Up

Before starting the unit, double check all electrical and plumbing connections and make sure the circulating system (the System III, the instrument being cooled, and the tubing that connects them) has been properly filled with cooling fluid.

Turn the RECIRCULATING FLOW CONTROL to “0”. Press the START button. The pump will start.

The low fluid level monitor in the reservoir prevents the unit from operating if the fluid level in the reservoir is below the safe operating level. By slightly, and/or intermittently opening the RECIRCULATING FLOW CONTROL (toward “+”) and using extra cooling fluid to keep the reservoir topped off, the system can be filled without repeated tripping of the low fluid level monitor.

If the unit shuts down, top off the reservoir and restart it. When the system is full, the reservoir level will no longer drop when the RECIRCULATING FLOW CONTROL valve is opened (toward “+”).

Temperature Adjustment

A control valve, located in the FACILITY WATER inlet line, regulates the flow rate of the cooling water supply as it enters the unit. The valve regulates the flow rate based on the heat load. Flow through the unit stops automatically when the unit is shut off.

Turn the TEMPERATURE CONTROL knob on the control panel to desired operating temperature. The temperature control system actuates a control valve in the FACILITY WATER line. The control valve adjusts the flow of the cooling water supply to produce the desired operating temperature.

When selecting an operating temperature, remember that the lowest achievable temperature is a function of the available flow rate, the temperature of the cooling water supply and the heat load.

The amber IDLE and green COOL lights indicate the control valve’s status. When the temperature control valve is wide open (for maximum cooling), the COOL light is on steady. When the control valve is closed, the IDLE light is on. As the control valve moves between these extremes, the two lights flash with varying on-time to indicate the approximate position of the control valve.

Flow Control

The RECIRCULATING FLOW CONTROL handle is connected to a three-way valve that controls the flow of the cooling fluid to the instrument being cooled. The handle is located on the front of the unit.

When the handle is in the “+” position, the valve is open and all available cooling fluid is supplied to the instrument being cooled. When the handle is in the “0” position, the valve is closed and no cooling fluid is supplied to the instrument being cooled. When the handle is between these two positions, the flow rate of the cooling fluid is between full flow and no flow. Use the flow meter to adjust the desired flow rate.

The gauge next to the flow control handle indicates the operating pressure.

Monitors

The unit is equipped with the following monitors:

Low Fluid Level

High Temperature

A fault condition will cause the unit to be shut down immediately. The fault must be identified and corrected before the unit can be restarted.

Low Fluid Level Monitor
The low fluid level monitor is connected to a float switch in the reservoir. A low fluid level fault occurs when the cooling fluid in the reservoir drops below the operating level.

High Temperature Monitor
The high temperature monitor is connected to a sensor that monitors the cooling fluid temperature as it exits the heat exchanger. The monitors protect the heat exchanger from exposure to excessively hot cooling fluid. A temperature fault occurs when the cooling fluid temperature exceeds the set temperature limit.

Set the temperature limit using the HIGH TEMPERATURE LIMIT knob on the control panel.

Fault Interlock Contact

A set of contacts is connected to a receptacle on the control panel. The contacts are rated 15A/240V. This is not a power inlet or outlet. The receptacle is isolated from the circuitry. Its ground pin is connected to the chassis. The contacts are closed during normal operation and open when the unit is turned off or when a fault is detected.

Fault Response Modes

In the event of a low fluid level or high temperature fault, two modes of response to a fault are possible: SHUTOFF and SIGNAL ONLY.

In the SHUTOFF mode, if either fault occurs, the fault interlock contacts will open, the FAULT light will light and the unit will shut down.

In the SIGNAL ONLY mode, the fault interlock contacts will open, the FAULT light will light, but the unit will continue to operate. This mode is available for customers who prefer to accept the risk of damage to the System III in order to continue to provide all available cooling fluid to the instrument being cooled in the event of a failure.

The unit is shipped from the factory with the SHUTOFF mode selected. The mode selector switch is inside the unit to prevent tampering or inadvertent operation. Refer to Section V, Fault Selection for instructions on changing the fault response mode.

Pump Motor Overload Protector (optional)

Three phase units with three phase pump motors have a pump motor overload protector. These units can be identified as having a MOL light next to the FAULT light on the control panel.

The overload protector prevents the pump motor from exposure to excessively high current. If an overload fault occurs, due, for example, to a heavy work load, the MOL light will light and the unit will shut down. The overload protector will automatically reset after about two minutes. The unit must be manually restarted.

Section V Maintenance & Service



For personal safety and equipment reliability, the following procedure should only be performed by a competent technician. Contact our Service Department for assistance (see Preface, After-sale Support).

Service Contracts

NESLAB offers on-site Service Contracts that are designed to provide extended life and minimal down-time for your unit. For more information, contact our Service Department (see Preface, After-sale Support).

Pump Strainer

A wire mesh pump strainer is located at the bottom of the reservoir. If debris is drawn into the reservoir, the strainer will prevent the material from being sucked into the pump and damaging the pump vanes.

After initial installation, the strainer may become clogged with debris and scale within the first week. Therefore, the strainer must be cleaned after the first week of installation. After this first cleaning, the frequency of cleaning depends on the purity of the cooling water. We recommend a visual inspection of the reservoir be made monthly after the initial cleaning. After several months, the frequency of cleaning will be established.

If the strainer is visibly clogged, cleaning is required.

Disconnect the power cord from the power source and drain the reservoir before cleaning the strainer.

Remove the strainer by unscrewing it.

Clean the strainer by rinsing it with water.

Refer to Section III, Filling Requirements for instructions on replacing the cooling fluid.

Facility Water Strainer

The facility water strainer is the user-installed basket strainer on the FACILITY WATER inlet. **NOTE:** The strainer is designed to be used only with water. Clean the strainer when it becomes visibly clogged or dirty.

Disconnect the power cord from the power source and turn off the facility cooling water.

Place a container under the strainer to collect any water that spills out of the basket when it is removed.

Unscrew the clear plastic basket. Remove the screen and rinse it with water. Replace the screen and the basket.

Algae

To restrict the growth of algae in the reservoir, it is recommended that the reservoir cover be kept in place and that all circulation lines be opaque. This will eliminate the entrance of light which is required for the growth of most common algae.

NESLAB recommends the use of Chloramine-T, one gram per gallon.

Configuration

The unit top is secured to the cabinet by four ball stud retainers; one at each corner. Remove cabinet top by prying upward gently (cover pops off) in order to perform the following adjustments.

In some cases, the side access panels may need to be removed. The access panels are secured using screws installed through the bottom of the cabinet. **NOTE**: Some models have a one piece cover rather than separate top and side panels. This type of cover is secured by five screws on each side of the case.

Voltage Selection

Remove the top cover from the cabinet.

The VOLTAGE SELECT toggle switch is located on the right side of the control box. Two ranges are available: 200-208V and 220-240V. Set the switch for the appropriate range.

Replace the top cover.

Fault Selection

Remove the top cover from the cabinet.

See Section IV, Fault Response Modes for a discussion of these options. Locate the SHUTOFF/SIGNAL ONLY toggle switch on the right side of the control box. Set the switch for the desired mode.

Replace the top cover.

Pressure Relief Valve

A pressure relief valve is located on the pump discharge line. The relief valve establishes the maximum operating pressure of the unit. If the pressure of the fluid leaving the pump exceeds the valve setting, the relief valve will bypass the fluid within the unit to relieve to the pressure. The relief valve does not determine the actual operating pressure; the actual operating pressure is determined by the flow control valve setting and pressure drop through the instrument being cooled.

If adjustment is necessary, consult our Service Department for assistance (see Preface, After-sale Support).

Fuses

Refer to the serial number label on the rear of the unit for the specific electrical requirements of your unit. Replacement fuses are 3/4 amp, time delay fuses. **Do not replace with an alternate amperage.**

Single Phase Units
Remove the top cover from the cabinet.

The fuses are located on the right side of the control box.

Three Phase Units
Remove the top cover, the right access panel and the control box cover.

The fuses are located inside the control box.

Phase Rotation

Three phase units with three phase pump motors are equipped with a phase rotation interlock. These units can be identified as having a PHASE light next to the FAULT light on the control panel.

This interlock prevents the unit from starting if the phase rotation is wrong. If the phasing is wrong, the PHASE light will light and the unit will not start.

Unplug the unit. Reverse any two power cord wires in the power cord plug.



Never remove the green ground wire.

Plug in the unit. The PHASE light should be off and the unit should start.

Section VI Troubleshooting

Checklist

Unit does not start, FAULT light does not come on when START button is pushed.

- Check the voltage of the power source. Refer to the serial number on the rear of the unit for the specific electrical requirements of your unit. Make sure the voltage of the power source meets the specified voltage, ±10%.
- Check the fuses (see Section V, Fuses).

When START switch is pushed, unit does not run, FAULT light comes on (SHUTOFF mode)

- Check fluid level in the reservoir. The low fluid level monitor prevents the unit from starting if the fluid level is below the safe operating level.
- Make sure the TEMPERATURE CONTROL setting is less than the HIGH TEMPERATURE LIMIT setting.

Unit runs, but FAULT light is on (SIGNAL ONLY mode)

- Check fluid level in the reservoir. The low fluid level monitor indicates a fault if the fluid level is below the safe operating level.
- Make sure the TEMPERATURE CONTROL setting is less than the HIGH TEMPERATURE LIMIT setting.

Unit continues to run for a short periods and then stops

- Check fluid level in the reservoir. If low, check the system for leaks.
- Make sure the heat load is not greater than the cooling capacity (see . Section II, Cooling Capacity).
- Make sure the cooling water supply meets the requirements outlined in Section III, Facility Water Requirements.
- Possible power interruption has occurred causing “latch” relay to unlatch. Attempt to restart.
- Ensure proper voltage (see Section III, Voltage Selection).

Green light always on, temperature is not dropping

- Make sure the heat load is not greater than the cooling capacity (see . Section II, Specifications).
- Make sure the cooling water supply meets the requirements outlined in Section III, Facility Water Requirements.
- Clean the pump and facility water strainers

Amber light always on, temperature is not rising

- Little, to no, heat load exists in instrument being cooled.

Poor Temperature Stability

The System III is designed to maximize heat removal with minimal facility cooling water requirements. Under conditions of excessive cooling capacity, instability may result. The condition may be aggravated by :

High temperature setpoint

Low facility water temperature

Small heat load

High facility water pressure

The situation can be remedied by limiting the available facility cooling water. Facility water pressure can be reduced with a pressure regulator before the System III. However, excessive restriction of facility water will reduce the System III's capacity.

Service Assistance

If, after following these troubleshooting steps, your units fails to operate properly, contact our Service Department for assistance (see Preface, After-sale Support). Before calling please obtain the following information:

BOM number

Serial number

Voltage of unit

Voltage of power source

Temperature at which the problem occurs

Temperature, pressure and flow rate of cooling water supply

Parts List

Our Service Department can provide you with a complete list of spare parts for your unit (see Preface, After-sale Support). Before calling, please obtain the following information:

BOM number

Serial number

Section VII Diagrams

Flow Diagram

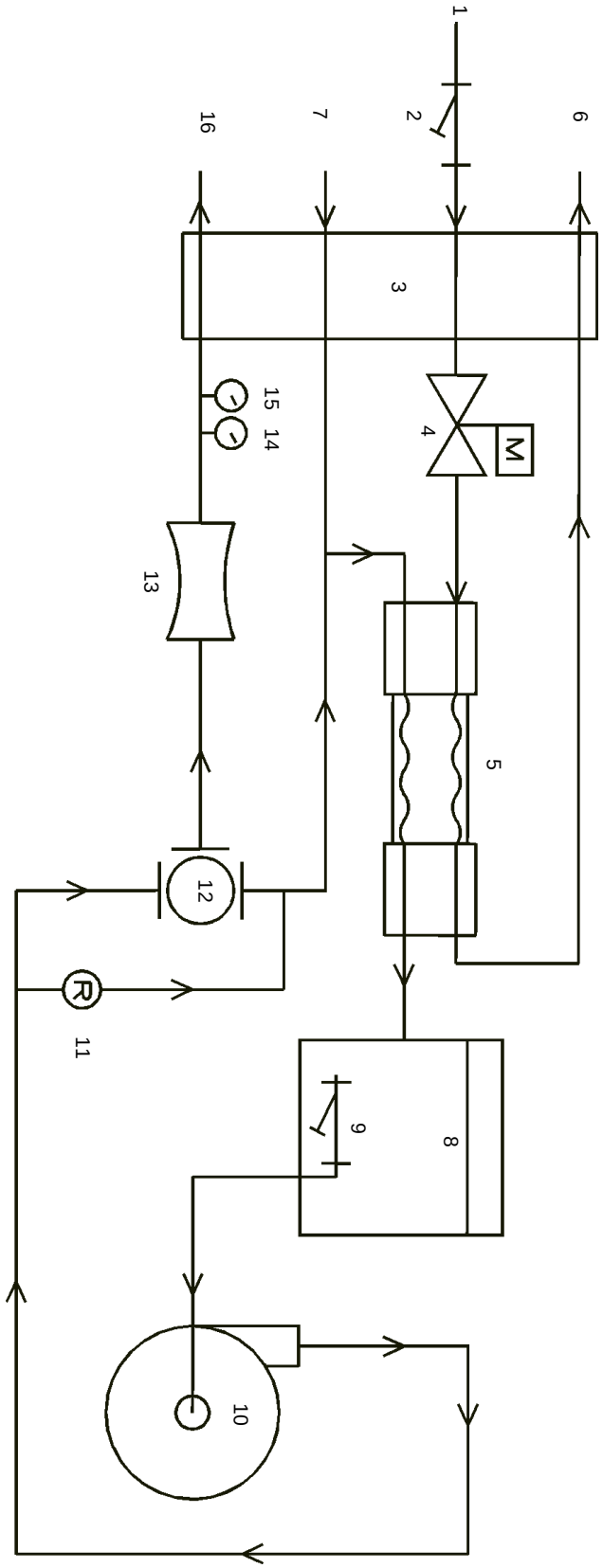

1. Facility Water Inlet
2. Facility Water Strainer
3. Water Bracket Assembly
4. Control Valve
5. Heat Exchanger
6. Facility Water Outlet
7. Recirculating Clean Fluid Inlet
8. Reservoir
9. Pump Strainer
10. Pump
11. Pressure Relief Valve
12. Ball Valve
13. Flow Meter
14. Temperature Gauge
15. Pressure Gauge
16. Recirculating Clean Fluid Outlet

Wiring Diagram 3Ø Units

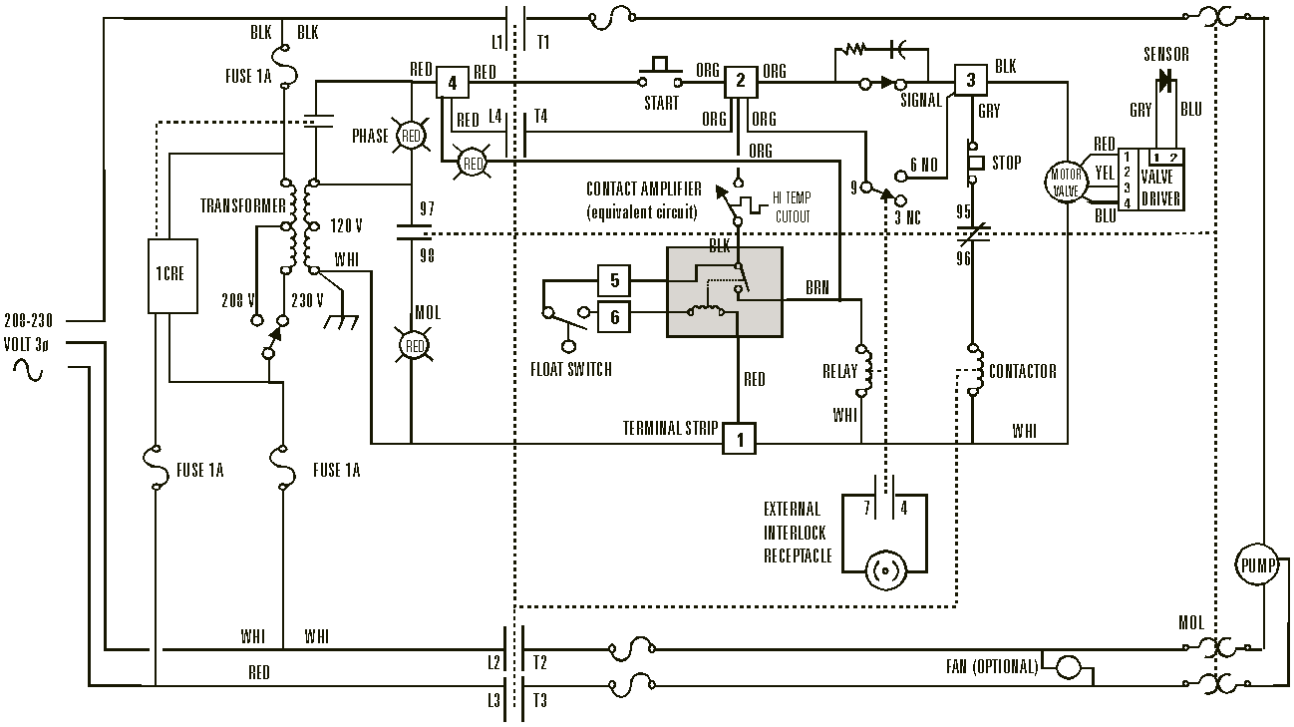

Wiring Diagram 1Ø Units

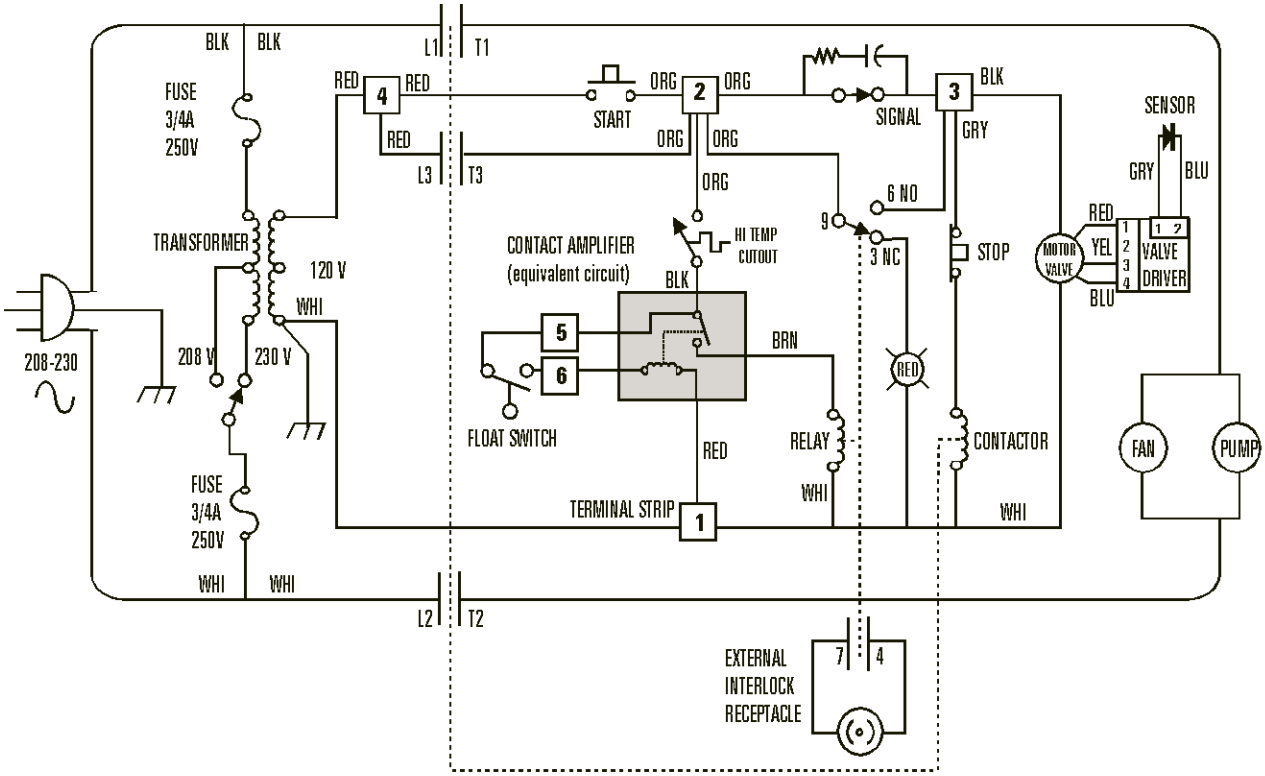

Front View

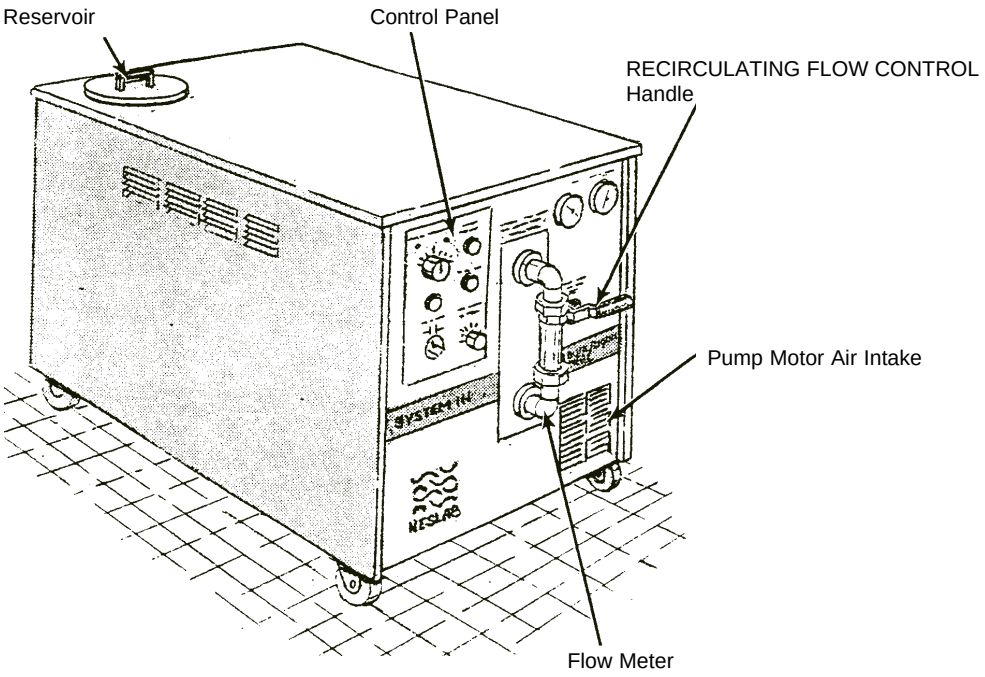

Rear View

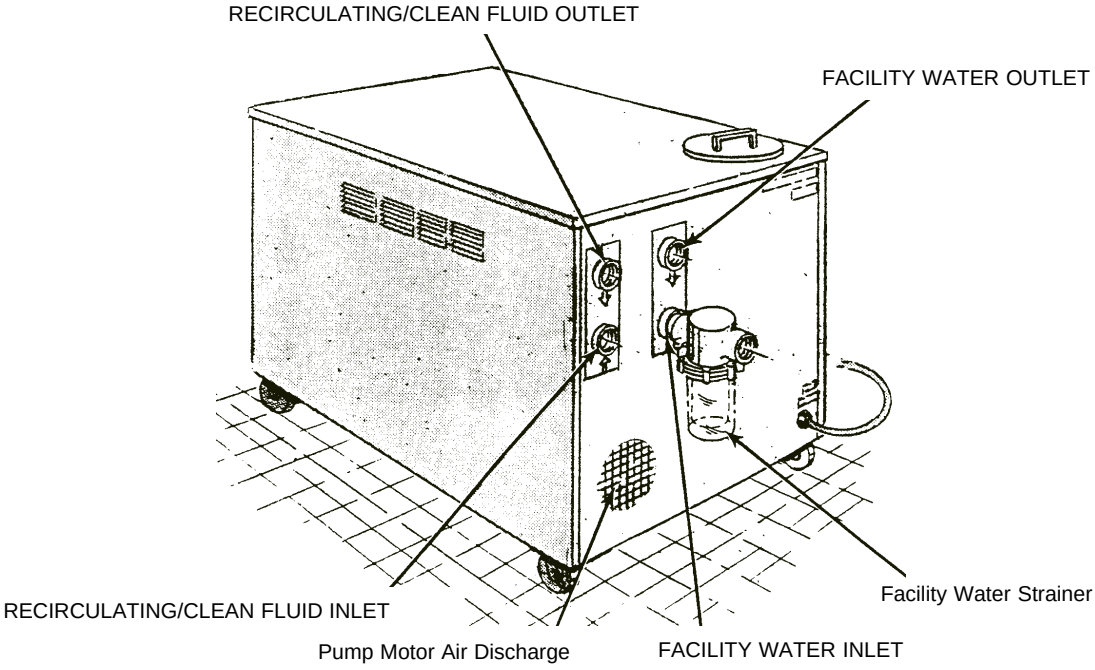

WARRANTY

NESLAB Instruments, Inc. warrants for 12 months from date of shipment any NESLAB unit according to the following terms.

Any part of the unit manufactured or supplied by NESLAB and found in the reasonable judgment of NESLAB to be defective in material or workmanship will be repaired at an authorized NESLAB Repair Depot without charge for parts or labor. The unit, including any defective part must be returned to an authorized NESLAB Repair Depot within the warranty period. The expense of returning the unit to the authorized NESLAB Repair Depot for warranty service will be paid for by the buyer. NESLAB's responsibility in respect to warranty claims is limited to performing the required repairs or replacements, and no claim of breach of warranty shall be cause for cancellation or recision of the contract of sales of any unit.

With respect to units that qualify for field service repairs, NESLAB's responsibility is limited to the component parts necessary for the repair and the labor that is required on site to perform the repair. Any travel labor or mileage charges are the financial responsibility of the buyer.

The buyer shall be responsible for any evaluation or warranty service call (including labor charges) if no defects are found with the NESLAB product.

This warranty does not cover any unit that has been subject to misuse, neglect, or accident. This warranty does not apply to any damage to the unit that is the result of improper installation or maintenance, or to any unit that has been operated or maintained in any way contrary to the operating or maintenance instructions specified in NESLAB's Instruction and Operation Manual. This warranty does not cover any unit that has been altered or modified so as to change its intended use.

In addition, this warranty does not extend to repairs made by the use of parts, accessories, or fluids which are either incompatible with the unit or adversely affect its operation, performance, or durability.

NESLAB reserves the right to change or improve the design of any unit without assuming any obligation to modify any unit previously manufactured.

THE FOREGOING EXPRESS WARRANTY IS IN LIEU OF ALL OTHER WARRANTIES, EXPRESSED OR IMPLIED, INCLUDING BUT NOT LIMITED TO WARRANTIES OR MERCHANTABILITY AND FITNESS FOR A PARTICULAR PURPOSE.

NESLAB'S OBLIGATION UNDER THIS WARRANTY IS STRICTLY AND EXCLUSIVELY LIMITED TO THE REPAIR OR REPLACEMENT OF DEFECTIVE COMPONENT PARTS AND NESLAB DOES NOT ASSUME OR AUTHORIZE ANYONE TO ASSUME FOR IT ANY OTHER OBLIGATION.

NESLAB ASSUMES NO RESPONSIBILITY FOR INCIDENTAL, CONSEQUENTIAL, OR OTHER DAMAGES INCLUDING, BUT NOT LIMITED TO LOSS OR DAMAGE TO PROPERTY, LOSS OF PROFITS OR REVENUE, LOSS OF THE UNIT, LOSS OF TIME, OR INCONVENIENCE.

This warranty applies to units sold in the United States. Any units sold elsewhere are warranted by the affiliated marketing company of NESLAB Instruments, Inc. This warranty and all matters arising pursuant to it shall be governed by the law of the State of New Hampshire, United States. All legal actions brought in relation hereto shall be filed in the appropriate state or federal courts in New Hampshire, unless waived by NESLAB.

System II Liquid to Liquid Heat Exchanger

NESLAB Manual P/N 002179
Rev. 06/05/97

Instruction and Operation Manual

System II Liquid to Liquid Heat Exchanger Instruction and Operation Manual

Table of Contents

PREFACE

Compliance 3
Unpacking 3
Warranty 3
After-sale Support 3

SECTION I Safety

Warnings 4

SECTION II General Information

Description 5
Specifications 5

SECTION III Installation

Site 7
Facility Water Requirements 7
Electrical Requirements 8
Plumbing Requirements 8
Fluids 9
Water Quality Standards and Recommendations 9
Filling Requirements 10

SECTION IV Operation

Start Up 11
REMOTE/LOCAL Switch (Optional) 11
Temperature Adjustment 11

SECTION V Special Features

Low Fluid Level Monitor 12
High Temperature Monitor 12
INTERLOCK Contacts 12
Pressure Relief Valve 13

SECTION VI Maintenance

Service Contracts 14
Cleaning 14
Algae 14
Pump Strainer 14
Facility Water Strainer 15

SECTION VII Troubleshooting

Checklist 16
Service Assistance 16

SECTION VIII Warranty 17

System II Quick Reference Operating Procedures

Installation

The unit has a heat exchanger, recirculation pump, stainless steel reservoir and a temperature controller. The unit should be located in an area with easy access to a cooling water source and a drain.

Cooling capacity is based the temperature of the cooling water supply and the cooling fluid supplied to your application.

Make sure the voltage of the power source meets the specified voltage, ±10%.

The plumbing connections are located on the rear of the unit and are labelled COOLING WATER and PROCESS WATER. These connections are ½ inch FPT. Connect the COOLING WATER connections to the cooling water supply. Connect the PROCESS WATER connections to your application.

To fill the reservoir remove the reservoir access cover and fill the reservoir with clean cooling fluid to within 1 inch of the top.

Tap water is the recommended fluid for operation from +8°C. Below +8°C, a non-freezing fluid must be used. A mixture of tap water and laboratory grade ethylene glycol is suggested.

Operation

Before starting the unit, double check all electrical and plumbing connections. Make sure the circulating system has been filled with cooling fluid.

Ensure that the facility water is turned on.

To start the unit, place the OFF/ON/START Switch to the START position. The recirculation pump starts and the POWER ON lamp illuminates.

The TEMPERATURE gauge on the front of the unit indicates the temperature of the fluid in the reservoir. The temperature of the cooling fluid is adjusted by turning the recessed valve screw located on top of the unit.

Periodic Maintenance

Periodically inspect the reservoir fluid. If cleaning is necessary, flush the reservoir with a cleaning fluid compatible with the circulating system and the cooling fluid.

Units are equipped with pump strainers. If debris is in the system, the strainer will prevent the material from being drawn into the pump and damaging the pump vanes.

After initial installation, the strainer may become clogged. The strainer must be cleaned after the first week of installation. After this first cleaning, a monthly visual inspection is recommended. After several months, the frequency of cleaning will be established.

Before cleaning, disconnect the power cord from the power source and drain the reservoir.

Preface

Compliance

Products tested and found to be in compliance with the requirements defined Products tested and found to be in compliance with the requirements defined in the EMC standards defined by 89/336/EEC as well as Low Voltage Directive (LVD) 73/23/EEC can be identified by the CE label on the rear of the unit. The testing has demonstrated compliance with the following directives:

LVD, 73/23/EEC	Complies with UL 3101-1:93
EMC, 89/336/EEC	EN 55011, Class A Verification EN 50082-1:1992 IEC 1000-4-2:1995 IEC 1000-4-3:1994 IEC 1000-4-4:1995

For any additional information refer to the Letter of Compliance that shipped with the unit (Declaration of Conformity).

Unpacking

Retain all cartons and packing material until the unit is operated and found to be in good condition. If the unit shows external or internal damage, or does not operate properly, contact the transportation company and file a damage claim. Under ICC regulations, this is your responsibility.

Warranty

Units have a one year warranty against defective parts and workmanship from date of shipment. See back page for more details.

After-sale Support

NESLAB is committed to customer service both during and after the sale. If you have questions concerning the operation of your unit, contact our Sales Department. If your unit fails to operate properly, or if you have questions concerning spare parts or Service Contracts, contact our Customer Service Department. Before calling, please obtain the following information from the unit's serial number label:

- *BOM number* _____

- *Serial number* _____

Section I Safety

Warnings

Make sure you read and understand all instructions and safety precautions listed in this manual before installing or operating your unit. If you have any questions concerning the operation of your unit or the information in this manual, contact our Sales Department (see After-sale Support).

Performance of installation, operation, or maintenance procedures other than those described in this manual may result in a hazardous situation and may void the manufacturer's warranty.

Observe all warning labels.

Never remove warning labels.

Never operate damaged or leaking equipment.

Never operate the unit without cooling fluid in the reservoir.

Always turn off the unit and disconnect the line cord from the power source before performing any service or maintenance procedures, or before moving the unit.

Always empty the reservoir before moving the unit.

Never operate equipment with damaged line cords.

Refer service and repairs to a qualified technician.

In addition to the safety warnings listed above, warnings are posted throughout the manual. These warnings are designated by an exclamation mark inside an equilateral triangle with text highlighted in bold print. Read and follow these important instructions. Failure to observe these instructions can result in permanent damage to the unit, significant property damage, or personal injury or death.

Section II General Information

Description

The System II Liquid to Liquid Heat Exchanger uses building recirculating or tap water as the secondary cooling medium to remove heat from the cooling fluid in the closed circulation loop.

The unit consists of a heat exchanger, recirculation pump, stainless steel reservoir, and a temperature controller.

The System II is available with two different plumbing configurations: single circulation loop, and dual circulation loop.

The single circulation loop unit has either two positive displacement pumps (PD-2) or a single turbine pump (TU-3), plumbed to a single inlet and outlet. The front panel switches and gauges correspond to this loop.

The dual circulation loop unit has two positive displacement pumps (PD-2), each plumbed to a separate inlet and outlet (A and B). The front panel switches and gauges labelled A, correspond with loop A. Front panel switches and gauges labelled B, correspond with loop B.

Specifications

Temperature Range	+10°C to +30°C
Temperature Stability[1]	±1.0°C
Cooling Capacity[1,2]	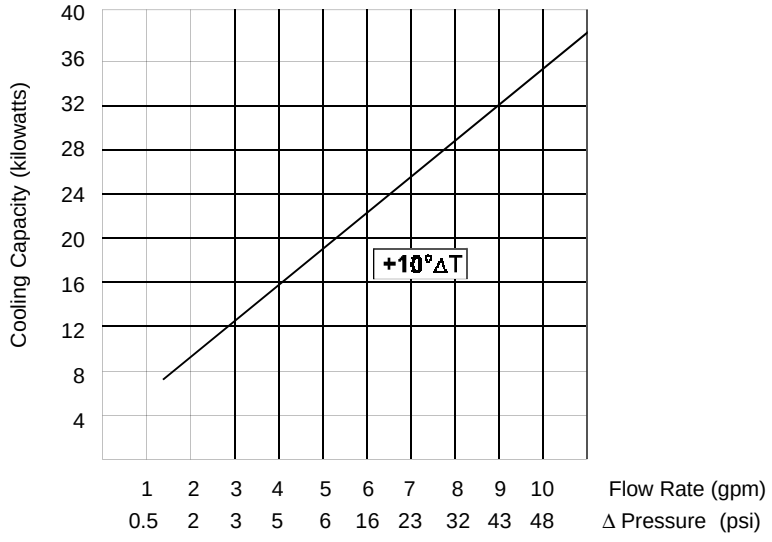

TU-3 Pumping Capacity[1]

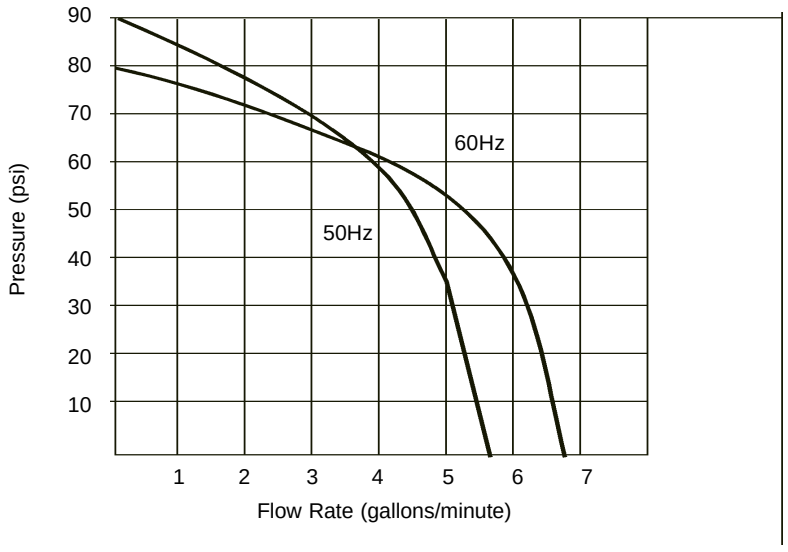

PD-2 Pump Capacity[1]

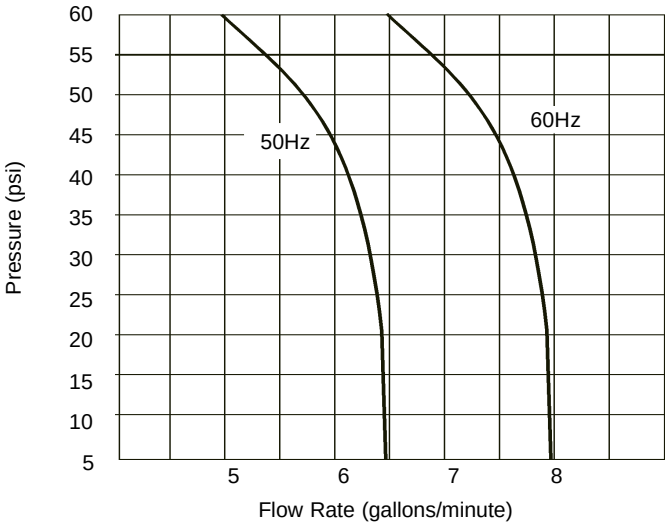

Reservoir Volume	
Gallons	1.75
Liters	6.6
Unit Dimensions *(H x W x D)*	
Inches	$30^{1}/_{8}$ x $16^{1}/_{4}$ x $20^{1}/_{8}$
Centimeters	76.5 x 41.3 x 51.1

1. Specifications listed are for a standard unit, +20°C fluid temperature, with tap water as the cooling fluid.
2. Cooling capacity is based on a 10°C difference between the temperature of the cooling water supply (house water) and the cooling fluid supplied to the instrument being cooled (see Section III, Facility Water Requirements). Pressure differential is required from house water.

Section III Installation

Site

The unit should be placed in a location with easy access to a cooling water source and a drain.

Never place the unit in a location where excessive heat, moisture, or corrosive materials are present.

Facility Water Requirements

Refer to the Cooling Capacity chart in Section II, Specifications. The flow rate of the cooling water supply must meet or exceed these requirements for the unit to operate at its full rated capacity. If the cooling water does not meet these standards, the cooling capacity will derate. The chart is based on a 10°C difference between the temperature of the cooling water supply (house water) and the cooling fluid supplied to the instrument being cooled.

As the heat load increases, the required flow rate of the cooling water supply increases. For example, if the heat load is 12 kilowatts, only 2.75 gallons per minute is required to remove the heat. However, if the heat load is 30 kilowatts, about 8.5 gallons per minute is required.

The chart below shows the approximate pressure drop through copper or plastic tubing at given flow rates.

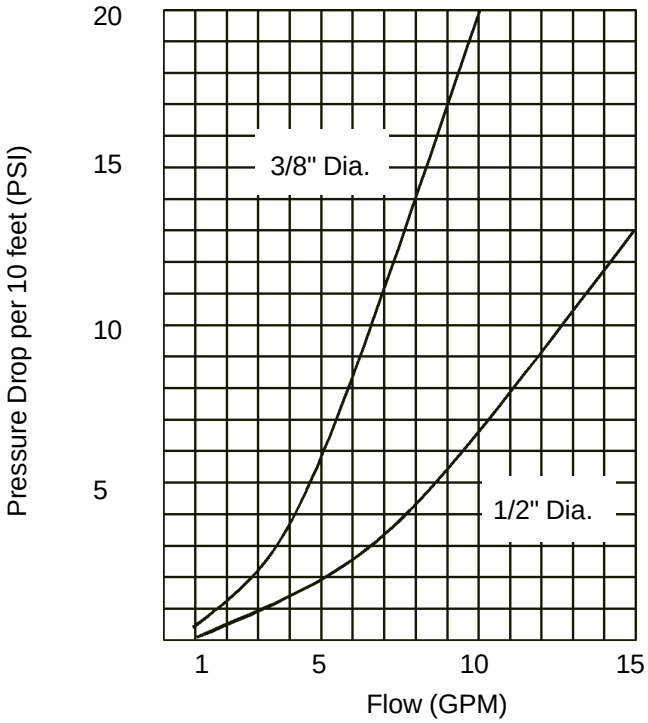

Electrical Requirements

Refer to the serial number label on the rear of the unit to identify the specific electrical requirements of your unit.

Ensure the voltage of the power source meets the specified voltage, ±10%.

The unit construction provides extra protection against the risk of electric shock by grounding appropriate metal parts. The extra protection may not function unless the power cord is connected to a properly grounded outlet. It is your responsibility to assure a proper ground connection is provided.

Plumbing Requirements

Before installing the unit to an instrument that previously used tap water as a cooling fluid, flush the instrument several times to remove any rust or scale that has built up. The manufacturer of the instrument should be able to recommend a cleaning fluid for their equipment.

The plumbing connections are located on the rear of the unit and are labelled COOLING WATER and PROCESS WATER. The COOLING WATER connections are ½ inch FPT. The PROCESS WATER connections are ¾ inch MPT.

Connect the COOLING WATER connections to the cooling water supply.

Connect the PROCESS WATER connections to the instrument being cooled.

Flexible tubing, if used, should be of heavy wall or reinforced construction. All tubing should be rate to withstand 80 psi at +35°C. Make sure all tubing connections are securely clamped. Avoid running tubing near radiators, hot water pipes, etc. If substantial lengths of tubing are necessary, insulation may be required to prevent loss of cooling capacity.

Tubing and insulation are available from NESLAB. Contact our Sales Department for more information (see Preface, After-sale Support).

It is important to keep the distance between the unit and the instrument being cooled as short as possible, and to use the largest diameter tubing practical. Tubing should be straight and without bends. If diameter reductions must be made, they should be made at the inlet and outlet of the instrument being cooled, not at the unit.

If substantial lengths of cooling lines are required, they should be pre-filled with cooling fluid before connecting them to the unit.

Fluids

Refer to the Water Quality Standards and Recommendations section.

Tap water is the recommended fluid for operation above 8°C.

Below +8°C, a non-freezing solution is required. A 50/50 mixture of laboratory grade ethylene glycol and water is suggested.



Do not use automobile anti-freeze. Commercial anti-freeze contains silicates that can damage the pump seals. Use of automobile anti-freeze will void the manufacturer's warranty.



Never use flammable or corrosive fluids with this unit.

Water Quality Standards and Recommendations

	Permissible(PPM)	Desirable(PPM)
Microbiologicals		
(algae,bacteria,fungi)	0	0
Inorganic Chemicals		
Calcium	<40	0.6
Chloride	250	<25
Copper	1.3	1.0
Iron	0.3	<0.1
Lead	0.015	0
Magnesium	<12	0.1
Manganese	0.05	<0.03
Nitrates\Nitrites	10 as N	0
Potassium	<20	0.3
Silicate	25	<1.0
Sodium	<20	0.3
Sulfate	250	<50
Hardness	17	<0.05
Total Dissolved Solids	50	10
Other Parameters		
pH	6.5-8.5	7-8
Resistivity	0.01*	0.05-0.1*

* Megohm-Cm (Compensated at 25C)

Unfavorably high total ionized solids (TIS) can accelerate the rate of galvanic corrosion. These contaminants can function as electrolytes which increase the potential for galvanic cell corrosion and lead to localized corrosion such as pitting which can be observed at the studs and on the outside surface of cooling coils. Eventually, the pitting will become so extensive that the coil will leak refrigerant into the water reservoir.

As an example, raw water in the United States averages 171 ppm (as NaCl). The recommended level for use in a water system is between 0.5 to 5.0 ppm (as NaCl).

Recommendation: Initially fill the tank with distilled/deionized water. Do not use untreated tap water as the total ionized solids level may be too high.

Maintain this water quality at a resistivity of between 1 to 10 megohm-cm (compensated at 25°C) by using a purification system. Although the initial fill may be as high as 10 megohm-cm (compensated at 25°C), the desired level for long time usage is 1 to 3 megohm-cm (compensated at 25°C).

The above two recommendations will reduce the electrolytic potential of the water and prevent or reduce the galvanic corrosion observed.

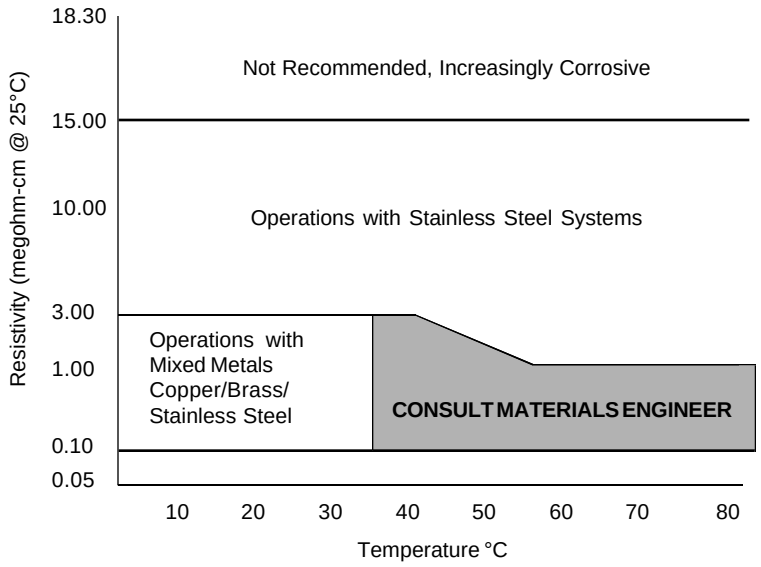

Water Quality Considerations

Filling Requirements

The reservoir access cover is located on top of the unit. Fill the reservoir to within 1 inch of the top. Keep extra cooling fluid on hand until the entire system (the System II, the instrument being cooled and the tubing that connects them) is filled.

Section IV Operation

Start Up

Before starting the unit, check all electrical and plumbing connections and make sure the circulating system has been properly filled with cooling fluid.

Ensure the facility water is turned on.

To start, momentarily place the OFF/ON/START switch in the START position. The recirculation pump will start and the POWER ON lamp will light.

If the unit does not continue to run when the OFF/ON/START switch is released, check the fluid level in the reservoir. The float switch in the reservoir prevents the unit from operating if the fluid level in the reservoir is below the operating level. If the fluid level is low, “top off” the reservoir.

REMOTE/LOCAL Switch (Optional)

To enable the remote on/off function, place the REMOTE/LOCAL switch to REMOTE. A 24 volt AC signal applied to the 6 pin connector will start the unit. The unit will stop when the signal is removed. When the REMOTE/LOCAL switch is in the REMOTE position, the unit can not be started locally.

Pin connections:

Pin 1	Ground.
Pins 2 and 3	A 24 volt AC signal applied to these pins will start the unit when the REMOTE/LOCAL switch is in the REMOTE position.
Pin 4	Not used.
Pin 5 and 6	These pins are connected to normally open contacts. The contacts are closed when the unit is running.

Temperature Adjustment

A control valve, located in the COOLING WATER INLET line, regulates the flow rate of the cooling water supply as it enters the unit. The valve regulates the flow rate based on the heat load.

The temperature of the cooling fluid is adjusted by turning the recessed valve screw located on top of the unit. Adjust the screw by inserting a screwdriver through the hole in the top. Turn the screw counterclockwise to increase the temperature of the cooling fluid, clockwise to decrease the temperature.

The TEMPERATURE gauge on the front of the unit indicates the temperature of the fluid in the reservoir.

When selecting an operating temperature, remember that the lowest achievable temperature is a function of the available flow rate, the temperature of the cooling water supply, the heat load and the cooling fluid.

Section V Special Features

Low Fluid Level Monitor

The low fluid level monitor is connected to a float switch in the reservoir. A low fluid level fault occurs when the cooling fluid in the reservoir drops below the operating level.

In the event of a low fluid level fault, the unit will shut down, and the INTERLOCK contacts will open. For proper operation, the cause of the fault must be identified and corrected before the unit can be restarted, the fluid level must be returned to the proper operating level.

High Temperature Monitor

The high temperature monitor (HTC) is connected to a sensor that monitors the cooling fluid temperature as it exits the heat exchanger. The monitor protects the system from exposure to excessively hot cooling fluid. A temperature fault occurs when the cooling fluid temperature exceeds the set temperature limit.

In the event of a high temperature fault, the unit will shut down, and the INTERLOCK contacts will open. The cause of the fault must be identified and corrected before the unit can be restarted.

The monitor is not pre-set and must be adjusted during initial installation. The monitor is located on the rear of the unit.

A slotted adjustment screw is located in the center of the monitor. A temperature range scale surrounds the adjustment screw. The temperature scale is in °F.

To adjust the monitor, turn the adjustment screw until the pointer on the temperature scale corresponds to the desired temperature limit. A temperature limit approximately 50°F higher than the operating temperature is recommended.

INTERLOCK Contacts

A set of relay contacts is connected to a receptacle on the front panel. The contacts are rated 15A, 250V. This is not a power inlet or outlet. The receptacle is isolated from the circuitry. Its ground pin is connected to the chassis. The contacts are normally open: they are closed during normal operation and open when the unit is turned off or when a fault occurs.

Pressure Relief Valve

The pressure relief valve establishes the maximum operating pressure of the unit. If the pressure of the fluid leaving the pump exceeds the valve setting, the relief valve will bypass the fluid within the unit to relieve the pressure. The relief valve does not determine the actual operating pressure; the operating pressure of the system is determined by the back pressure of the connected equipment and the setting of the flow control.

If adjustment is necessary, contact our Customer Service Department.

For applications requiring maximum pressure less than 55 psi, a retrofittable External Pressure Reducer (EPR) is available. An EPR allows operating pressures of 10 to 50 psi. Contact our Sales Department for more information (see Preface, After-sale Support). Before calling please obtain the following information:

Part number

Serial number

Section VI Maintenance

Service Contracts

NESLAB offers on-site Service Contracts that are designed to provide .... extended life and minimal down-time for your unit. For more information, contact our Service Department (see Preface, After-sale Support).

Cleaning

Periodically inspect the reservoir. If cleaning is necessary, flush the reservoir with a cleaning fluid compatible with the circulating system and the cooling fluid.

Algae

To restrict the growth of algae in the reservoir, it is recommended that the reservoir cover be kept in place and that all circulation lines be opaque. This will eliminate the entrance of light which is required for the growth of most common algae.

NESLAB recommends the use of Chloramine-T, one gram per gallon.

Pump Strainer

A wire mesh screen is located on the pump suction line.

If debris is in the system, the strainer will prevent the material from being drawn into the pump and damaging the pump vanes.

After initial installation, the strainer may become clogged with debris and scale. Therefore, the strainers must be cleaned after the first week of installation. Before cleaning, disconnect the line cord from the power source and drain the reservoir.

Unscrew the strainer and rinse it with water. Replace the strainer. After this first cleaning, a monthly visual inspection is recommended. After several months, the frequency of cleaning will be established.

TU-3 Pumps
The strainer for units equipped with a TU-3 pumps is located inside the reservoir, directly under the reservoir access cover.

PD-2 Pumps
Remove the unit's wrapper. The strainer for units equipped with PD-2 pumps is located in each pump's suction line (under the hex nut).

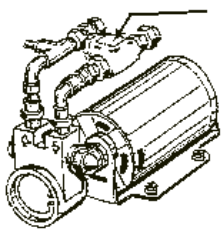

PD-2 pump motors requires pump lubrication. These motors use sleeve type bearings with large oil reservoirs. Oiling instructions are generally posted on each motor. In the absence of legible lubrication instructions, add approximately 30 to 35 drops of SAE 20 non-detergent oil to each bearing on the following schedule (SAE 20 = 142 CS viscosity):

Duty Cycle	Oiling Frequency
Continuous	Every year
Intermittent	Every 2 years
Occasional	Every 5 years

PD-2 Lubrication Fill Holes (Typical)

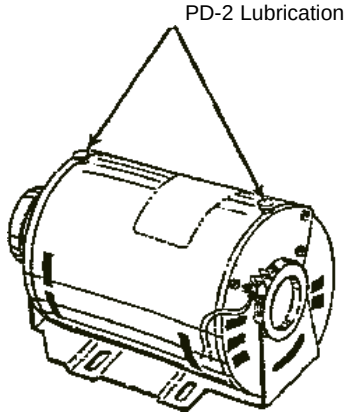

Facility Water Strainer (Optional)

The facility water strainer is a user-installed basket strainer on the FACILITY WATER inlet. Clean the strainer when it becomes clogged or dirty.

Disconnect the power cord from the power source and turn off the facility water. Place a container under the strainer to collect any water spills out of the basket when it is removed.

Unscrew the clear plastic basket. Remove the screen and rinse it with water. Replace the screen and the basket.

Section VII Troubleshooting

Checklist

Unit will not run
Make sure the voltage of the power source meets the specified voltage, ±10%. Refer to the serial number on the rear of the unit for the specific electrical requirements of your unit.

On units with a REMOTE/LOCAL switch, ensure the switch is in the correct position.

Unit runs when OFF/ON/START button is in START position, but stops when button is released.
Hold switch in START position for longer period of time.

Check for proper reservoir level. The float switch in the reservoir prevents the unit from operating if the fluid level in the reservoir is below the operating level. If the fluid level is low, “top off” the reservoir and restart the unit.

Make sure the high temperature monitor is set higher than the temperature of the cooling fluid.

Check the fuse on the circuit board inside the control box. The fuse is 0.5 Amp 250 V slow-blow.

Unit runs for a short period, then stops.
Check the fluid level in the reservoir. If it is low, check the system for leaks.

Make sure the heat load is not greater than the cooling capacity of the unit (see Section II, Cooling Capacity).

Make sure the cooling water supply meets the requirements outlined in Section III, Facility Water Requirements.

A possible power interruption has occurred, causing the “latch” relay to unlatch. Attempt to restart.

Service Assistance

If, after following these troubleshooting steps, your unit fails to operate properly, contact our Service Department for assistance (see Preface, After-sale Support). Before calling please obtain the following information:

Part number
Serial number
Voltage of unit
Voltage of power source
Temperature at which the problem occurs
Temperature, pressure, and flow rate of cooling water supply

Our Service Department can provide you with a wiring diagram and a complete list of spare parts for your unit.

WARRANTY

NESLAB Instruments, Inc. warrants for 12 months from date of shipment any NESLAB unit according to the following terms.

Any part of the unit manufactured or supplied by NESLAB and found in the reasonable judgment of NESLAB to be defective in material or workmanship will be repaired at an authorized NESLAB Repair Depot without charge for parts or labor. The unit, including any defective part must be returned to an authorized NESLAB Repair Depot within the warranty period. The expense of returning the unit to the authorized NESLAB Repair Depot for warranty service will be paid for by the buyer. NESLAB's responsibility in respect to warranty claims is limited to performing the required repairs or replacements, and no claim of breach of warranty shall be cause for cancellation or recision of the contract of sales of any unit.

With respect to units that qualify for field service repairs, NESLAB's responsibility is limited to the component parts necessary for the repair and the labor that is required on site to perform the repair. Any travel labor or mileage charges are the financial responsibility of the buyer.

The buyer shall be responsible for any evaluation or warranty service call (including labor charges) if no defects are found with the NESLAB product.

This warranty does not cover any unit that has been subject to misuse, neglect, or accident. This warranty does not apply to any damage to the unit that is the result of improper installation or maintenance, or to any unit that has been operated or maintained in any way contrary to the operating or maintenance instructions specified in NESLAB's Instruction and Operation Manual. This warranty does not cover any unit that has been altered or modified so as to change its intended use.

In addition, this warranty does not extend to repairs made by the use of parts, accessories, or fluids which are either incompatible with the unit or adversely affect its operation, performance, or durability.

NESLAB reserves the right to change or improve the design of any unit without assuming any obligation to modify any unit previously manufactured.

THE FOREGOING EXPRESS WARRANTY IS IN LIEU OF ALL OTHER WARRANTIES, EXPRESSED OR IMPLIED, INCLUDING BUT NOT LIMITED TO WARRANTIES OR MERCHANTABILITY AND FITNESS FOR A PARTICULAR PURPOSE.

NESLAB'S OBLIGATION UNDER THIS WARRANTY IS STRICTLY AND EXCLUSIVELY LIMITED TO THE REPAIR OR REPLACEMENT OF DEFECTIVE COMPONENT PARTS AND NESLAB DOES NOT ASSUME OR AUTHORIZE ANYONE TO ASSUME FOR IT ANY OTHER OBLIGATION.

NESLAB ASSUMES NO RESPONSIBILITY FOR INCIDENTAL, CONSEQUENTIAL, OR OTHER DAMAGES INCLUDING, BUT NOT LIMITED TO LOSS OR DAMAGE TO PROPERTY, LOSS OF PROFITS OR REVENUE, LOSS OF THE UNIT, LOSS OF TIME, OR INCONVENIENCE.

This warranty applies to units sold in the United States. Any units sold elsewhere are warranted by the affiliated marketing company of NESLAB Instruments, Inc. This warranty and all matters arising pursuant to it shall be governed by the law of the State of New Hampshire, United States. All legal actions brought in relation hereto shall be filed in the appropriate state or federal courts in New Hampshire, unless waived by NESLAB.

System I Liquid to Liquid Heat Exchanger

NESLAB Manual P/N 013564
Rev. 06/05/97

Instruction and Operation Manual



NESLAB online
Product Service Information, Electronic Catalog, Applications Notes, MSDS Forms, e-mail.

(603)427-2490
Set modem to 8-N-1 protocol, 1200 - 14400 baud

Voice Info: (800) 4-NESLAB

Comments on this manual can be sent to:

NESLAB@lifesciences.com

or visit our Web page at:

http://www.neslabinc.com

System I Liquid to Liquid Heat Exchanger
Table of Contents

PREFACE

Compliance 2
Unpacking 2
Warranty 2
After-sale Support 2

SECTION I Safety

Warnings 3

SECTION II General Information

Description 4
Specifications 4

SECTION III Installation

Site 5
Facility Water Requirements 5
Electrical Requirements 5
Plumbing Requirements 6
Fluids 6
Water Quality Standards and Recommendations 7
Filling Requirements 9
Pump Purging 9

SECTION IV Operation

Start Up 10
Temperature Adjustment 10

SECTION V Special Features

Low Level Fluid Monitor 11
High Temperature Monitor 11
EXTERNAL INTERLOCK Contacts 11

SECTION VI Maintenance and Service

Service Contracts 12
Cleaning 12
Algae 12
Pump Strainer 12
Pressure Relief Valve Adjustment 13
Pump Lubrication 14

SECTION VII Troubleshooting

Checklist 15
Service Assistan 16
Technical Support 16

SECTION VIII Diagrams

Flow Diagram 17

SECTION IX Warranty 18

Preface

Compliance

Products tested and found to be in compliance with the requirements defined in the EMC standards defined by 89/336/EEC as well as Low Voltage Directive (LVD) 73/23/EEC can be identified by the CE label on the rear of the unit. The testing has demonstrated compliance with the following directives:

LVD, 73/23/EEC	Complies with UL 3101-1:93
EMC, 89/336/EEC	EN 55011, Class A Verification EN 50082-1:1992 IEC 1000-4-2:1995 IEC 1000-4-3:1994 IEC 1000-4-4:1995

For any additional information refer to the Letter of Compliance that shipped with the unit (Declaration of Conformity).

Unpacking

Retain all cartons and packing material until the unit is operated and found to be in good condition. If the unit shows external or internal damage, or does not operate properly, contact the transportation company and file a damage claim. Under ICC regulations, this is your responsibility.

Warranty

Units have a one year warranty against defective parts and workmanship from date of shipment. See back page for more details.

After-sale Support

NESLAB is committed to customer service both during and after the sale. If you have questions concerning the operation of your unit, contact our Sales Department. If your unit fails to operate properly, or if you have questions concerning spare parts or Service Contracts, please contact our Service Department for assistance.

Section I Safety

Warnings

Make sure you read and understand all instructions and safety precautions listed in this manual before installing or operating your unit. If you have any questions concerning the operation of your unit or the information in this manual, contact our Sales Department (see After-sale Support).

Observe all warning labels.

Never remove warning labels.

Never operate damaged or leaking equipment.

Never operate the unit without cooling fluid in the reservoir.

Always turn off the unit and disconnect the line cord from the power source before performing any service or maintenance procedures.

Always empty the reservoir before moving the unit.

Always turn off the unit and disconnect the line cord from the power source before moving the unit.

Never operate equipment with damaged line cords.

In addition to the safety warnings listed above, warnings are posted through out the manual. These warnings are designated by an exclamation mark inside an equilateral triangle with text highlighted in bold. Read and follow these important instructions. Failure to observe these instructions can result in permanent damage to the unit, significant property damage, or personal injury or death.

Section II General Information

Description

The System I Liquid to Liquid Heat Exchanger uses building recirculating or tap water as the secondary cooling medium to remove heat from the cooling fluid in the closed recirculation loop.

The unit consists of a heat exchanger, recirculation pump, PVC reservoir, and an analog temperature controller.

Specifications

Temperature Range	+5°C to +35°C
Temperature Stability[1]	±1.0°C
Cooling Capacity[1,2]	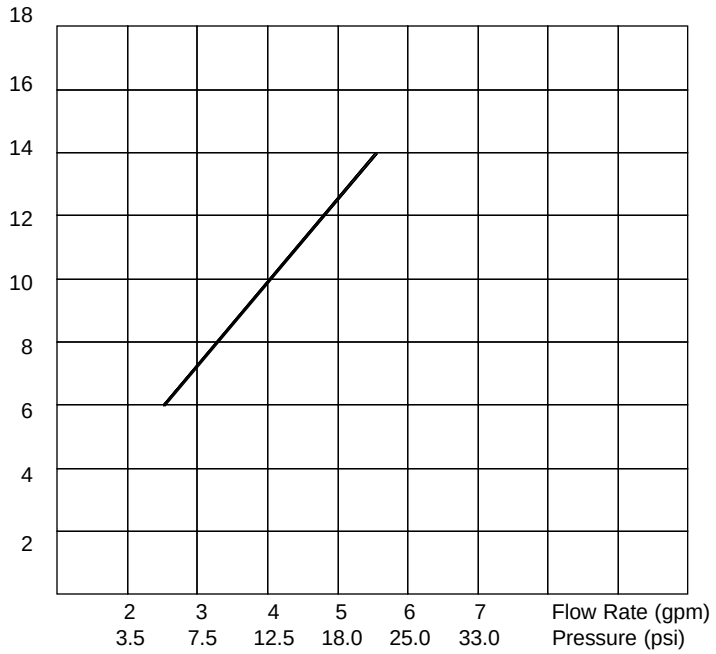
Reservoir Volume *Gallons* *Liters*	 1.0 3.8
Unit Dimensions *(H x W x D)* *Inches* *Centimeters*	 25½ x 14¼ x 20½ 64.7 x 36.2 x 52.1

1. Specifications listed are for a standard unit, operating at +20°C fluid temperature, with tap water as the cooling fluid.
2. Cooling capacity is based on a 10°C difference between the temperature of the cooling water supply (house water) and the cooling fluid as it leaves the System I (see Section III, Facility Water Requirements).

Section III Installation

Site

The unit should be placed in a location with easy access to a cooling water source and a drain. Never place the unit in a location where excessive heat, moisture, or corrosive materials are present.

Facility Water Requirements



Limit the facility water inlet pressure to approximately 65 psig.

Refer to the Cooling Capacity chart in Section II, Specifications. The flow rate of the cooling water supply must meet or exceed these requirements for the unit to operate at its full rated capacity. If the cooling water does not meet these standards, the cooling capacity will derate. The chart is based on a 10°C difference between the temperature of the cooling water supply (facility water) and the cooling fluid as it leaves the System I.

As the heat load increases, the required flow rate of the cooling water supply increases. For example, if the heat load is 8 kilowatts, only 3.25 gallons per minute at 8.5 psi is required to remove the heat. However, if the heat load is 14 kilowatts, about 5.5 gallons per minute at 21.5 psi is required.

Electrical Requirements

Refer to the serial number on the rear of the unit for the specific electrical requirements of your unit.

Ensure the voltage of the power source meets the specified voltage, ±10%.



Make sure an adequate ground connection is provided.

Plumbing Requirements

Before installing the unit to an instrument that previously used tap water as a cooling fluid, flush the instrument several times to remove any rust or scale that has built up. The manufacturer of the instrument should be able to recommend a cleaning fluid for their equipment.

The plumbing connections are located on the rear of the unit and are labelled COOLING WATER and RECIRCULATING WATER. The top fittings are inlets and the bottom fittings are outlets. The COOLING WATER connections are ¾ inch FPT. The RECIRCULATING WATER connections are ½ inch MPT.

Connect the COOLING WATER connections to the cooling water supply.

Connect the RECIRCULATING WATER connections to the instrument being cooled.

Flexible tubing, if used, should be of heavy wall or reinforced construction. All tubing should be rated to withstand 80 psi at +35°C. Make sure all tubing connections are securely clamped. Avoid running tubing near radiators, hot water pipes, etc. If substantial lengths of tubing are necessary, insulation may be required to prevent loss of cooling capacity.

Tubing and insulation are available from NESLAB. Contact our Sales Department for more information (see Preface, After-sale Support).

It is important to keep the distance between the unit and the instrument being cooled as short as possible, and to use the largest diameter tubing practical. Tubing should be straight and without bends. If diameter reductions must be made, they should be made at the inlet and outlet of the instrument being cooled, not at the unit.

If substantial lengths of cooling lines are required, they should be pre-filled with cooling fluid before connecting them to the unit.

Fluids

Refer to the Water Quality and Recommendations section.

The selected fluid must have a viscosity of 50 centistokes or less at the lowest operating temperature.

Tap water is the recommended fluid for operation.



Never use flammable or corrosive fluids with this unit.

Water Quality Standards and Recommendations

	Permissible(PPM)	Desirable(PPM)
Microbiologicals		
(algae,bacteria,fungi)	0	0
Inorganic Chemicals		
Calcium	<40	0.6
Chloride	250	<25
Copper	1.3	1.0
Iron	0.3	<0.1
Lead	0.015	0
Magnesium	<12	0.1
Manganese	0.05	<0.03
Nitrates\Nitrites	10 as N	0
Potassium	<20	0.3
Silicate	25	<1.0
Sodium	<20	0.3
Sulfate	250	<50
Hardness	17	<0.05
Total Dissolved Solids	50	10
Other Parameters		
pH	6.5-8.5	7-8
Resistivity	0.01*	0.05-0.1*

* Megohm-Cm (Compensated at 25C)

Unfavorably high total ionized solids (TIS) can accelerate the rate of galvanic corrosion. These contaminants can function as electrolytes which increase the potential for galvanic cell corrosion and lead to localized corrosion such as pitting which can be observed at the studs and on the outside surface of cooling coils. Eventually, the pitting will become so extensive that the coil will leak refrigerant into the water reservoir.

As an example, raw water in the United States averages 171 ppm (as NaCl). The recommended level for use in a water system is between 0.5 to 5.0 ppm (as NaCl).

Recommendation: Initially fill the tank with distilled/deionized water. Do not use untreated tap water as the total ionized solids level may be too high.

Maintain this water quality at a resistivity of between 1 to 10 megohm-cm (compensated at 25°C) by using a purification system. Although the initial fill may be as high as 10 megohm-cm (compensated at 25°C), the desired level for long time usage is 1 to 3 megohm-cm (compensated at 25°C).

The above two recommendations will reduce the electrolytic potential of the water and prevent or reduce the galvanic corrosion observed.

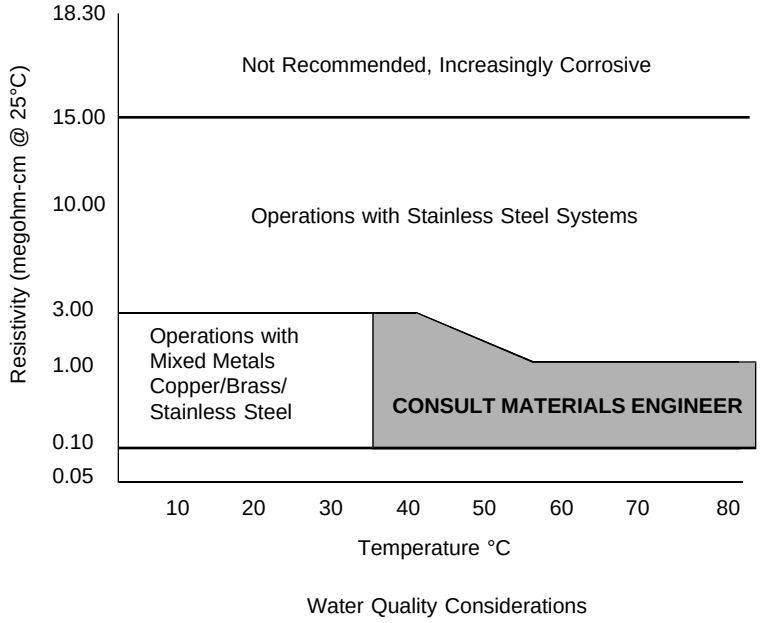

Water Quality Considerations

Filling Requirements

The reservoir access cover is located on top of the unit. Remove the reservoir access cover and locate the reservoir plug (square nut). Remove the plug and fill the reservoir to the bottom of the fill hole flange. Keep extra cooling fluid on hand until the entire system (the System I, the instrument being cooled and the tubing that connects them) is filled.

Do not replace the reservoir plug until the unit is circulating fluid through the instrument being cooled (see Section IV, Start Up).

Pump Purging

Units with TU-1 pumps may require pump purging. Refer to the identification label on the rear of the unit to identify the specific pump.

Pump purging is necessary to purge air trapped in the pump head cavity. When the unit is started, if there is no flow in the RECIRCULATING SUPPLY tube, or if the flow is restricted (see Section II, Pumps to review the pump flow and pressure specifications), purging is necessary.

Place a container under the SUPPLY connection. Start the unit. Loosen the hose clamp on the SUPPLY connection and partially remove the hose from the connection. **Do not completely remove the hose from the SUPPLY connection.** Allow the air to escape. After a few moments, cooling fluid should flow from the connection.

If fluid does not flow on its own accord, attach a short piece of tubing to the connection and apply suction to start flow.

Once flow is established, reconnect the tubing on the SUPPLY connection. The pump is now purged and the unit is ready for operation.

Section IV Operation

Start Up

Before starting the unit, check all electrical and plumbing connections and make sure the circulating system has been properly filled with cooling fluid.

To start the unit, place the POWER ON/OFF switch in the ON position and momentarily press and hold the PUSH TO START button. The recirculation pump will start.

If the unit does not continue to run when the PUSH TO START button is released, check the fluid level in the reservoir. The float switch in the reservoir prevents the unit from operating if the fluid level in the reservoir is below the operating level. If the fluid level is low, “top off” the reservoir and restart the unit.

Once the System I continues to circulate cooling fluid through the instrument being cooled, replace the reservoir plug. Tighten the plug “hand tight”; excessive pressure can damage the PVC reservoir.

Temperature Adjustment

A control valve, located in the COOLING WATER INLET line, regulates the flow rate of the cooling water supply as it enters the unit. The valve regulates the flow rate based on the heat load. Flow through the unit is discontinued when the unit is shut off.

To adjust the temperature of the cooling fluid, turn the calibrated TEMPERATURE dial and position the desired temperature as close as possible to the reference line.

The RECIRCULATING TEMPERATURE gauge on the front of the unit indicates the temperature of the fluid in the reservoir.

The temperature controller opens and closes the control valve in the COOLING WATER INLET to maintain the desired temperature. The green and amber lights on the control panel indicate the status of the valve. When the green light is on, the valve is open and heat is being removed from the cooling fluid. When the amber light in on, no cooling is occurring.

When selecting an operating temperature, remember that the lowest achievable temperature is a function of the available flow rate, the temperature of the cooling water supply and the heat load.

When tap water is used as a cooling water source, a slight “bucking” may occur as the valve opens and closes. The amount of “bucking” depends on the pressure differential between the COOLING WATER INLET and the COOLING WATER OUTLET/DRAIN. By lowering the pressure differential to 12 psi, the amount of “bucking” can be minimized. The “bucking” is not harmful to the System I.

Section V Special Features

Low Fluid Level Monitor

The low fluid level monitor is connected to a float switch in the reservoir. A low fluid level fault occurs when the cooling fluid in the reservoir drops below the operating level.

In the event of a low fluid level fault, the unit will shut down, the red HIGH TEMP/LOW LEVEL lamp will light, and the EXTERNAL INTERLOCK contacts will open. The cause of the fault must be identified and corrected before the unit can be restarted.

High Temperature Monitor

The high temperature monitor (HTC) is connected to a sensor that monitors the cooling fluid temperature as it exits the heat exchanger. The monitor protects the system from exposure to excessively hot cooling fluid. A temperature fault occurs when the cooling fluid temperature exceeds the set temperature limit.

In the event of a high temperature fault, the unit will shut down, the red HIGH TEMP/LOW LEVEL lamp will light, and the EXTERNAL INTERLOCK contacts will open. The cause of the fault must be identified and corrected before the unit can be restarted.

The monitor is not preset and must be adjusted during initial installation. The monitor is located on the rear of the unit.

A slotted adjustment screw is located in the center of the monitor. A temperature range scale is located next to the adjustment screw. The temperature scale is in °F.

To adjust the monitor, turn the adjustment screw until the pointer on the temperature scale corresponds to the desired limit. A temperature limit ~50°F higher than the operating temperature is recommended.

EXTERNAL INTERLOCK Contacts

A set of relay contacts is connected to a receptacle on the front pare labelled EXTERNAL INTERLOCK. The contacts are rated for 15A/250V. This is not a power inlet or outlet. The receptacle is isolated from the circuitry. Its ground pin is connected to the chassis. The contacts are normally open: they are closed during normal operation and open when the unit is turned off or when a fault occurs.

Section VI Maintenance and Service

For personal safety and equipment reliability, the following procedures should only be performed by a qualified technician. Contact our Service Department for assistance (see Preface, After-sale Support).

Service Contracts

NESLAB offers on-site Service Contracts that are designed to provide extended life and minimal down-time for your unit. For more information, contact our Service Department (see Preface, After-sale Support).

Cleaning

Periodically inspect the reservoir. If cleaning is necessary, flush the reservoir with a cleaning fluid compatible with the circulating system and the cooling fluid.

Algae

To restrict the growth of algae in the reservoir, it is recommended that the reservoir cover be kept in place and that all circulation lines be opaque. This will eliminate the entrance of light which is required for the growth of most common algae.

NESLAB recommends the use of Chloramine-T, one gram per gallon.

Pump Strainer

A wire mesh screen (under hex nut) is located in the pump suction line. If debris is drawn into the system, the strainer will prevent the material from being sucked into the pump and damaging the pump vanes.

After initial installation, the strainer may become clogged with debris and scale. Therefore, the strainer must be cleaned after the first week of installation. After this first cleaning, a monthly visual inspection is recommended. After several months, the cleaning frequency will be established.

PD-1 Pump: a wire mesh screen is located under the large acorn nut on the head of the pump.

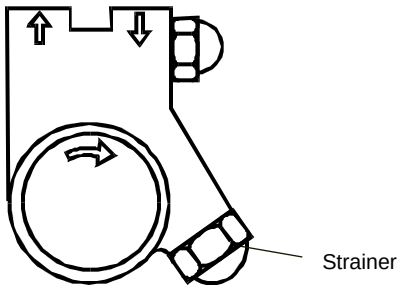

PD-2 Pump: a wire mesh screen is located under the large hex nut on the pump suction line.

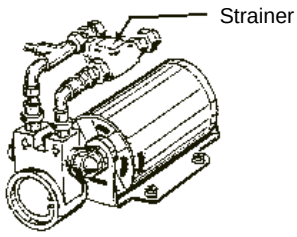

Before cleaning the strainer, disconnect the line cord from the power source and drain the reservoir.

Remove the appropriate nut. Remove the strainer from the unit and rinse it with water. When the screen is clean, replace it in the strainer cavity, tighten the hex nut and replace the panel. Refer to Section III, Filling Requirements for instructions on replacing the cooling fluid.

Pressure Relief Valve Adjustment

The adjustable pressure relief valve establishes the maximum operating pressure of the unit. If the pressure of the fluid leaving the pump exceeds the valve setting, the relief valve will bypass the fluid within the unit to relieve the pressure. The relief valve does not determine the actual operating pressure; the operating pressure of the system is determined by the back pressure of the connected equipment and the setting of the flow control.

If adjustment is necessary, contact our Service Department.

For applications requiring maximum pressure less than 55 psi, a retrofittable External Pressure Reducer (EPR) is available. An EPR allows an operating pressure of 10 to 50 psi. Contact our Sales Department for more information (see Preface, After-sale Support). Before calling please obtain the following information:

BOM number

Serial number

Pump Motor Lubrication

Units with PD pumps require pump motor lubrication. Refer to the pump identification label on the rear of the unit for the specific pump in your unit.

Motors used to drive the pump are manufactured by several companies. These motors use sleeve type bearings with large oil reservoirs. Oiling instructions are generally posted on each motor. In the absence of legible lubrication instructions, add approximately 30 to 35 drops of SAE 20 non-detergent oil to each bearing on the following schedule (SAE 20 = 142 CS viscosity):

Duty Cycle	Oiling Frequency
Continuous	Each year
Intermittent	Each 2 years
Occasional	Each 5 years

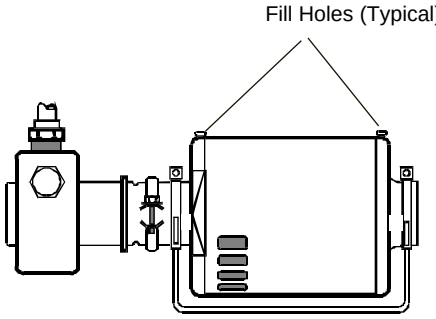

Section VII Troubleshooting

Checklist

Unit will not run (POWER ON/OFF switch is in ON position, HIGH TEMP/LOW LEVEL light is not lit).
Make sure the voltage of the power source meets the specified voltage, ±10%. Refer to the serial number on the rear of the unit for the specific electrical requirements of your unit.

Unit runs when PUSH TO START button is pressed, but stops when button is released.
Press and hold PUSH TO START button for longer period of time.

Check for proper reservoir level. The float switch in the reservoir prevents the unit from operating if the fluid level in the reservoir is below the operating level.
If the fluid level is low, “top off” the reservoir and restart the unit.

Make sure the high temperature monitor is set higher than the temperature of the cooling fluid.

Unit runs for a short period, then stops (HIGH TEMP/LOW LEVEL light is lit).
Check the fluid level in the reservoir. If it is low, check the system for leaks.

Make sure the TEMPERATURE dial is set for a temperature lower than the high temperature limit setting (see Section V, High Temperature Monitor).

Make sure the heat load is not greater than the cooling capacity of the unit (see Section II, Cooling Capacity).

Make sure the cooling water supply meets the requirements outlined in Section III, Facility Water Requirements.

A possible power interruption has occurred, causing the “latch” relay to unlatch. Attempt to restart.

Service Assistance

If, after following these troubleshooting steps, your unit fails to operate properly, contact our Service Department for assistance (see Preface, After-sale Support). Before calling please obtain the following information:

Part number

Serial number

Voltage of unit

Voltage of power source

Temperature at which the problem occurs

Temperature, pressure, and flow rate of cooling water supply

Technical Support

Our Service Department can provide you with a wiring diagram and a complete list of spare parts for your unit (see Preface, After-sale Support). Before calling, please obtain the following information:

Part number

Serial number

Section VIII Diagrams

Flow Diagram

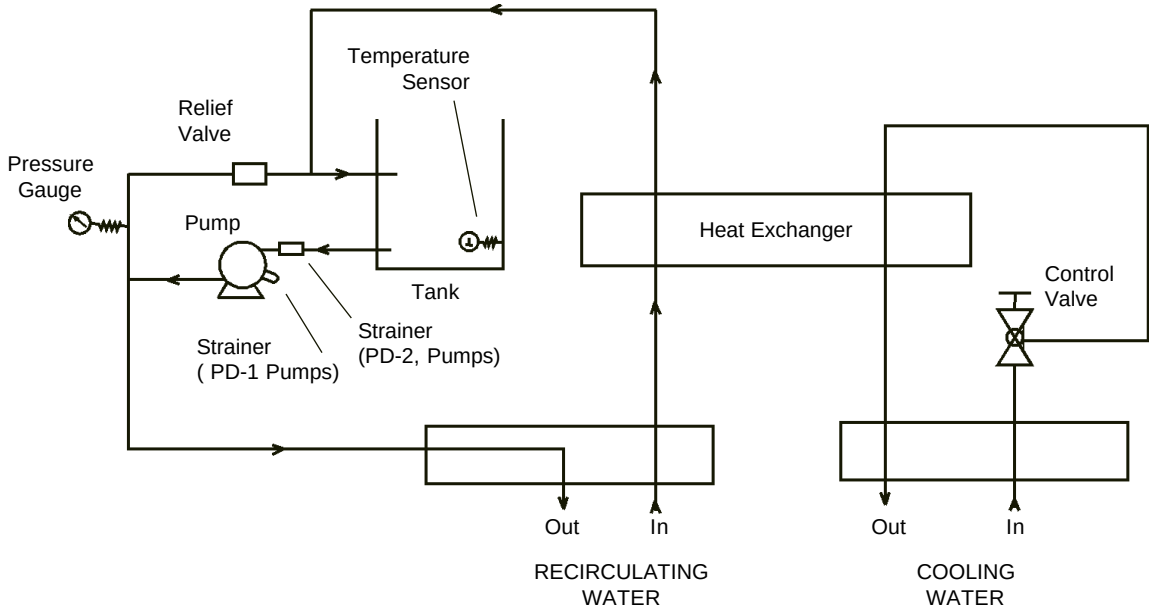

WARRANTY

NESLAB Instruments, Inc. warrants for 12 months from date of shipment any NESLAB unit according to the following terms.

Any part of the unit manufactured or supplied by NESLAB and found in the reasonable judgment of NESLAB to be defective in material or workmanship will be repaired at an authorized NESLAB Repair Depot without charge for parts or labor. The unit, including any defective part must be returned to an authorized NESLAB Repair Depot within the warranty period. The expense of returning the unit to the authorized NESLAB Repair Depot for warranty service will be paid for by the buyer. NESLAB's responsibility in respect to warranty claims is limited to performing the required repairs or replacements, and no claim of breach of warranty shall be cause for cancellation or recision of the contract of sales of any unit.

With respect to units that qualify for field service repairs, NESLAB's responsibility is limited to the component parts necessary for the repair and the labor that is required on site to perform the repair. Any travel labor or mileage charges are the financial responsibility of the buyer.

The buyer shall be responsible for any evaluation or warranty service call (including labor charges) if no defects are found with the NESLAB product.

This warranty does not cover any unit that has been subject to misuse, neglect, or accident. This warranty does not apply to any damage to the unit that is the result of improper installation or maintenance, or to any unit that has been operated or maintained in any way contrary to the operating or maintenance instructions specified in NESLAB's Instruction and Operation Manual. This warranty does not cover any unit that has been altered or modified so as to change its intended use.

In addition, this warranty does not extend to repairs made by the use of parts, accessories, or fluids which are either incompatible with the unit or adversely affect its operation, performance, or durability.

NESLAB reserves the right to change or improve the design of any unit without assuming any obligation to modify any unit previously manufactured.

THE FOREGOING EXPRESS WARRANTY IS IN LIEU OF ALL OTHER WARRANTIES, EXPRESSED OR IMPLIED, INCLUDING BUT NOT LIMITED TO WARRANTIES OR MERCHANTABILITY AND FITNESS FOR A PARTICULAR PURPOSE.

NESLAB'S OBLIGATION UNDER THIS WARRANTY IS STRICTLY AND EXCLUSIVELY LIMITED TO THE REPAIR OR REPLACEMENT OF DEFECTIVE COMPONENT PARTS AND NESLAB DOES NOT ASSUME OR AUTHORIZE ANYONE TO ASSUME FOR IT ANY OTHER OBLIGATION.

NESLAB ASSUMES NO RESPONSIBILITY FOR INCIDENTAL, CONSEQUENTIAL, OR OTHER DAMAGES INCLUDING, BUT NOT LIMITED TO LOSS OR DAMAGE TO PROPERTY, LOSS OF PROFITS OR REVENUE, LOSS OF THE UNIT, LOSS OF TIME, OR INCONVENIENCE.

This warranty applies to units sold in the United States. Any units sold elsewhere are warranted by the affiliated marketing company of NESLAB Instruments, Inc. This warranty and all matters arising pursuant to it shall be governed by the law of the State of New Hampshire, United States. All legal actions brought in relation hereto shall be filed in the appropriate state or federal courts in New Hampshire, unless waived by NESLAB.

System IV Liquid to Liquid Heat Exchanger

NESLAB Manual P/N 013798
Rev. 06/05/97

Instruction and Operation Manual

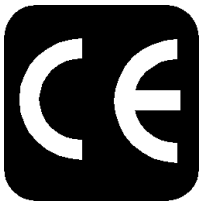

System IV Liquid to Liquid Heat Exchanger
Instruction and Operation Manual

Table of Contents

PREFACE

Compliance 3
Unpacking 3
Warranty 3
After-sale Support 3

SECTION I
Safety

Warnings 4

SECTION II
General Information

Description 5
Specifications 5

SECTION III
Installation

Site 6
Facility Water Requirements 6
Electrical Requirements 7
Voltage Selection 7
Plumbing Requirements 7
Fluids 8
Water Quality Standards and Recommendations 8
Filling Requirements 9

SECTION IV
Operation

Start Up 10
Temperature Adjustment 10
Flow Control 10

SECTION V
Special Features

High Temperature Safety 11
Low Liquid Level Safety 11
External Interlock Contact 11
Fault Response Modes 12
Pump Motor Overload Protector 12

SECTION VI
Maintenance

Service Contracts 13
Facility Water Strainer 13
Algae 13

SECTION VII
Service

Configuration 14
Voltage Selection 14
Fault Selection 14
Pressure Relief Valve 14
Fuses 15
Phase Rotation 15

SECTION VIII
Troubleshooting

Checklist 16
Service Assistance 17
Technical Support 17

SECTION IX
Diagrams

Flow Diagram 18

SECTION X
Warranty 19

Preface

Compliance

Products tested and found to be in compliance with the requirements defined in the EMC standards defined by 89/336/EEC as well as Low Voltage Directive (LVD) 73/23/EEC can be identified by the CE label on the rear of the unit. This label indicates testing has demonstrated compliance with the following directives:

LVD, 73/23/EEC	Complies with UL 3101-1:93
EMC, 89/336/EEC	EN 55011, Class A Verification EN 50082-1:1992 IEC 1000-4-2:1995 IEC 1000-4-3:1994 IEC 1000-4-4:1995

For any additional information refer to the Letter of Compliance that shipped with the unit (Declaration of Conformity).

Unpacking

Retain all cartons and packing material until the unit is operated and found to be in good condition. If the unit shows external or internal damage, or does not operate properly, contact the transportation company and file a damage claim. Under ICC regulations, this is your responsibility.

Warranty

Units have a warranty against defective parts and workmanship for one full year from date of shipment. See back page for more details.

After-sale Support

NESLAB is committed to customer service both during and after the sale. If you have questions concerning the operation of your unit, contact our Sales Department. If your unit fails to operate properly, or if you have questions concerning spare parts or Service Contracts, contact our Service Department, see back cover. Before calling, please obtain the following information from the unit's serial number label on the rear of the unit:

- *BOM number* _____
- *Serial number* _____

Section I Safety

Warnings

Make sure you read and understand all instructions and safety precautions listed in this manual before installing or operating your unit. If you have any questions concerning the operation of your unit or the information in this manual, contact our Sales Department (see After-sale Support).

Performance of installation, operation, or maintenance procedures other than those described in this manual may result in a hazardous situation and may void the manufacturer's warranty.

Observe all warning labels.

Never remove warning labels.

Never operate damaged or leaking equipment.

Never operate the unit without cooling fluid in the reservoir.

Always turn off the unit and disconnect the line cord from the power source before performing any service or maintenance procedures, or before moving the unit.

Always empty the reservoir before moving the unit.

Never operate equipment with damaged line cords.

Refer service and repairs to a qualified technician.

In addition to the safety warnings listed above, warnings are posted throughout the manual. These warnings are designated by an exclamation mark inside an equilateral triangle with text highlighted in bold print. Read and follow these important instructions. Failure to observe these instruction can result in permanent damage to the unit, significant property damage, or personal injury or death.

Section II General Information

Description

The System IV Liquid to Liquid Heat Exchanger is designed to remove heat from water-cooled instruments.

The consists of a heat exchanger, recirculation pump, stainless steel reservoir and an analog temperature controller.

Specifications

Temperature Range	+5°C to +40°C
Temperature Stability	±1.0°C
Cooling Capacity[1]	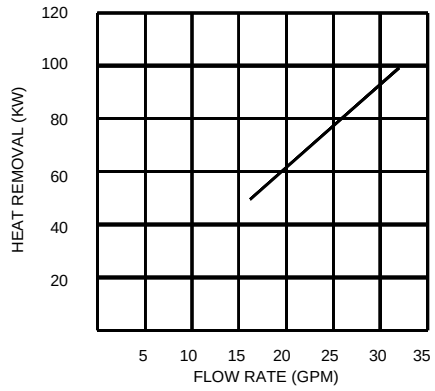
Pumping Capacity[2]	50 gpm at 60 psi
Reservoir Volume *Gallons* *Liters*	 6.5 24.6
Unit Dimensions *(H x W x D)* *Inches* *Centimeters*	 32.5 x 23.0 x 27.0 82.5 x 58.4 x 68.6

1. Cooling capacity is based on a 10°C difference between the temperature of the cooling water supply and 40 gallons per minute facility water flow.
2. CP 100 pump, customizing options available.

Section III Installation

Site

The unit should be placed in a laboratory or clean industrial environment with easy access to a facility cooling water and a drain.

Facility Water Requirements

Refer to the Cooling Capacity chart in Section II, Specifications. The flow rate of the cooling water supply must meet or exceed these requirements for the unit to operate at its full rated capacity. If the cooling water does meet these standards, the cooling capacity will be derated. The chart is based on a 10°C difference between the temperature of the cooling water supply and the process fluid entering the instrument being cooled.

As the heat load increases, the required flow rate of the cooling water supply increases. For example, if the heat load is 60 kilowatts, only 20 gallons per minute is required to remove the heat. However, if the heat load is 80 kilowatts, 26 gallons per minute is required.

The flow meter on the front of the unit does not measure the flow rate of the cooling water supply. The flow meter measures the flow rate of the cooling fluid returning to the instrument being cooled.

The approximate facility side water pressure drop though the unit is shown on the graph below.

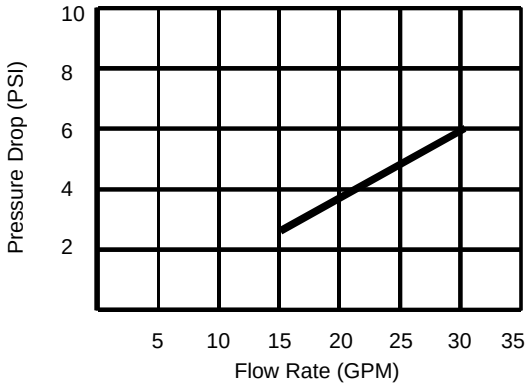

Electrical Requirements



The unit construction provides extra protection against the risk of electric shock by grounding appropriate metal parts . The extra protection may not function unless the power cord is connected to a properly grounded outlet. It is the user's responsibility to assure a proper ground connection is provided.

Refer to the serial number label on the rear of the unit to identify the specific electrical requirements of your unit.

Make sure the voltage of the power source meets the specified voltage, ±10%.

Voltage Selection

If the unit is to be operated from a 220 to 240 volt source, a voltage selector inside the unit must be reset. See Section VII, Service for instructions on changing the voltage selection.

Plumbing Requirements

The plumbing connections are located on the rear of the unit and are labelled FACILITY WATER and RECIRCULATING WATER. The connections are 1 inch nominal FPT.

Before installing the unit to an instrument that previously used tap water as a cooling fluid, flush the instrument several times to remove any rust or scale that has built up. The manufacturer of the instrument should be able to recommend a cleaning fluid for their equipment.

Connect the FACILITY WATER SUPPLY to the cooling water source. Connect the FACILITY WATER RETURN to the drain.

Connect the RECIRCULATING WATER SUPPLY to the inlet of the instrument being cooled. Connect the RECIRCULATING WATER RETURN to the outlet of the instrument being cooled.

Flexible tubing, if used, should be of heavy wall or reinforced construction. All tubing should be rate to withstand 80 psi at +40°C. Make sure all tubing connections are securely clamped. Avoid running tubing near radiators, hot water pipes, etc. If substantial lengths of tubing are necessary, insulation may be required to prevent loss of cooling capacity.

Tubing and insulation are available from NESLAB. Contact our Sales Department for more information (see Preface, After-sale Support).

It is important to keep the distance between the unit and the instrument being cooled as short as possible, and to use the largest diameter tubing practical. Tubing should be straight and without bends. If reductions must be made, they should be made at the inlet and outlet of the instrument being cooled, not at the unit.

If substantial lengths of cooling lines are required, they should be pre-filled with cooling fluid before connecting them to the unit.

Fluids

Refer to Tap Water Quality and Recommendations.

Tap water is the recommended cooling fluid.

Water Quality Standards and Recommendations

	Permissible(PPM)	Desirable(PPM)
Microbiologicals		
(algae,bacteria,fungi)	0	0
Inorganic Chemicals		
Calcium	<40	0.6
Chloride	250	<25
Copper	1.3	1.0
Iron	0.3	<0.1
Lead	0.015	0
Magnesium	<12	0.1
Manganese	0.05	<0.03
Nitrates\Nitrites	10 as N	0
Potassium	<20	0.3
Silicate	25	<1.0
Sodium	<20	0.3
Sulfate	250	<50
Hardness	17	<0.05
Total Dissolved Solids	50	10
Other Parameters		
pH	6.5-8.5	7-8
Resistivity	0.01*	0.05-0.1*

* Megohm-Cm (Compensated at 25C)

Unfavorably high total ionized solids (TIS) can accelerate the rate of galvanic corrosion. These contaminants can function as electrolytes which increase the potential for galvanic cell corrosion and lead to localized corrosion such as pitting which can be observed at the studs and on the outside surface of cooling coils. Eventually, the pitting will become so extensive that the coil will leak refrigerant into the water reservoir.

As an example, raw water in the United States averages 171 ppm (as NaCl). The recommended level for use in a water system is between 0.5 to 5.0 ppm (as NaCl).

Recommendation: Initially fill the tank with distilled/deionized water. Do not use untreated tap water as the total ionized solids level may be too high.

Maintain this water quality at a resistivity of between 1 to 10 megohm-cm (compensated at 25°C) by using a purification system. Although the initial fill may be as high as 10 megohm-cm (compensated at 25°C), the desired level for long time usage is 1 to 3 megohm-cm (compensated at 25°C).

The above two recommendations will reduce the electrolytic potential of the water and prevent or reduce the galvanic corrosion observed.

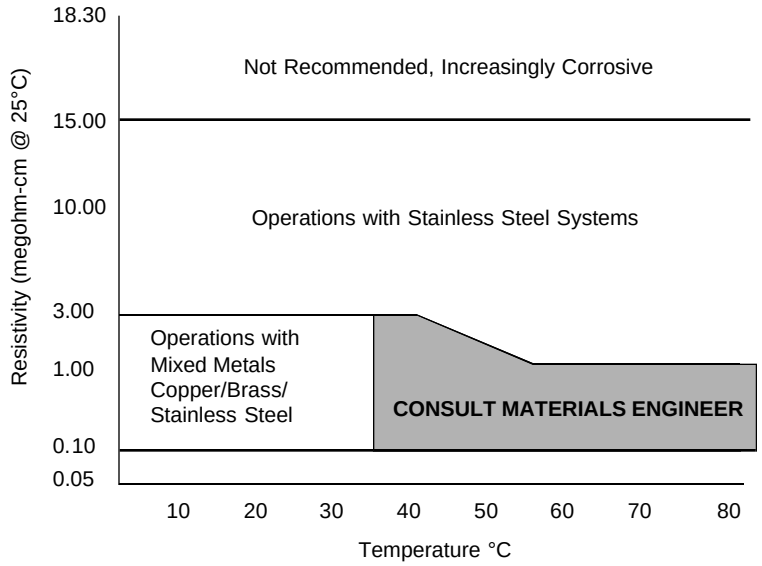

Water Quality Considerations

Filling Requirements

Remove the top access panel and locate the reservoir. Fill the reservoir with cooling fluid to within one inch of the top. Since the reservoir capacity is small compared to the volume of the circulating system, keep extra cooling fluid on hand until the circulating system is full.

Section IV Operation

Start Up

Before starting the unit, double check all electrical and plumbing connections and make sure the circulating system (the System IV, the instrument being cooled, and the tubing that connects them) has been properly filled.

Turn the RECIRCULATING FLOW CONTROL handle to the horizontal position (full closed). To start the unit press the START/PUSH button.

The reservoir's low fluid level monitor prevents the unit from operating if the reservoir fluid is below the safe operating level. By slightly and/or intermittently opening the RECIRCULATING FLOW CONTROL toward the vertical position (full open) and using extra fluid to keep the unit topped off, the system can be filled without repeated tripping of the low fluid level monitor.

If the unit shuts down, top off the reservoir and restart the unit. When the system is full, the reservoir level will no longer drop when the RECIRCULATING FLOW CONTROL valve is opened.

Temperature Adjustment

A control valve, located in the FACILITY WATER SUPPLY line, regulates the flow rate of the cooling water supply as it enters the unit. The valve regulates the flow rate based on the heat load. Flow through the unit stops automatically when the unit is shut off.

To adjust the temperature of the cooling fluid, the unit must be on, circulating cooling fluid, and under a heat load. Turn the TEMPERATURE CONTROL knob to the desired operating temperature. The temperature control system actuates a control valve in the FACILITY WATER SUPPLY line. The control valve adjusts the flow of the cooling water supply to produce the desired operating temperature.

The temperature of the cooling fluid can be monitored on the RECIRCULATING TEMPERATURE gauge.

When selecting an operating temperature, remember that the lowest achievable temperature is a function of the available flow rate, the temperature of the cooling water supply and the heat load.

The amber IDLE and green COOL lights provide an indication of the control valves status. When the temperature control valve is wide open (for maximum cooling), the COOL light is on steady. When the control valve is closed, the IDLE light is on. As the control valve moves between these extremes, the two lights flash with varying on-time to indicate the approximate position of the control valve.

Flow Control

The RECIRCULATING FLOW CONTROL handle controls the flow of the cooling fluid to the instrument being cooled. When the handle is in the full vertical position all available fluid is being supplied. When the handle is in the full horizontal position no cooling fluid is being supplied. Use the flow meter to adjust the desired flow rate.

Section V Special Features

High Temperature Safety

The high temperature safety is connected to a sensor that monitors the cooling fluid temperature as it exits the reservoir. The safety protect the circulating system from exposure to excessively hot cooling fluid. A temperature fault occurs when the cooling fluid temperature exceeds the set temperature limit.

In the event of a high temperature fault, the red FAULT lamp will light, the unit will shut down and the corresponding EXTERNAL INTERLOCK contacts will open. The cause of the fault must be identified and corrected before the unit can be restarted.

Set the temperature limit using the HIGH TEMPERATURE LIMIT dial on the control panel. The temperature scale is in °C.

Low Liquid Level Safety

The low liquid level safety is connected to a float switch in the reservoir. A low liquid level fault occurs when the cooling fluid in the reservoir drops below the operating level.

In the event of a low liquid level fault, the red FAULT lamp will light, the unit will shut down and the corresponding EXTERNAL INTERLOCK contacts will open. The cause of the fault must be identified and corrected before the unit can be restarted.

Fault Interlock Contacts

A set of contacts are connected to a receptacle on the control panel. The contacts are rated for 15 amps, 240V. This is not a power inlet or outlet. The receptacle is isolated from the circuitry. Its ground pin is connected to the chassis. The contacts are closed during normal operation and open when the unit is turned off or when a fault occurs.

Fault Response Modes

In the event of a low fluid level or high temperature fault, two modes of response to a fault are possible: SHUTOFF and SIGNAL ONLY.

In the SHUTOFF mode, if either fault occurs, the fault interlock contacts will open, the FAULT light will light and the unit will shut down.

In the SIGNAL ONLY mode, the fault interlock contacts will open, the FAULT light will light, but the unit will continue to operate. This mode is available for customers who prefer to accept the risk of damage to the System IV in order to continue to provide all available cooling fluid to the instrument being cooled in the event of a failure.

The unit is shipped from the factory with the SHUTOFF mode selected. The mode selector switch is inside the unit to prevent tampering or inadvertent operation. Refer to Section VII, Fault Selection for instructions on changing the fault response mode.

Pump Motor Overload Protector

The unit has a pump motor overload protector. The overload protector prevents the pump motor from exposure to excessively high current. If an overload fault occurs, due, for example, to a heavy work load, the MOL light will light and the unit will shut down. The overload protector will automatically reset after about two minutes. The unit must be manually restarted.

Section VI Maintenance

Service Contracts

NESLAB offers on-site Service Contracts that are designed to provide extended life and minimal down-time for your unit. For more information, contact our Service Department (see Preface, After-sale Support).

Pump Strainer

For units with other than a CP pump, a wire mesh pump strainer is located at the bottom of the reservoir. If debris is drawn into the reservoir, the strainer will prevent the material from being sucked into the pump and damaging the pump vanes.

After initial installation, the strainer may become clogged with debris and scale within the first week. Therefore, the strainer must be cleaned after the first week of installation. After this first cleaning, the frequency of cleaning depends on the purity of the cooling water. We recommend a visual inspection of the reservoir be made monthly after the initial cleaning. After several months, the frequency of cleaning will be established.

If the strainer is visibly clogged, cleaning is required.

Disconnect the power cord from the power source and drain the reservoir before cleaning the strainer.

Remove the strainer by unscrewing it.

Clean the strainer by rinsing it with water.

Refer to Section III, Filling Requirements for instructions on replacing the cooling fluid.

Facility Water Strainer

The facility water strainer is the user-installed basket strainer on the FACILITY WATER SUPPLY line. Clean the strainer when it becomes visibly clogged or dirty.

Disconnect the power cord from the power source and turn off the facility cooling water.

Place a container under the strainer to collect any water that spills out of the basket when it is removed.

Unscrew the clear plastic basket. Remove the screen and rinse it with water. Replace the screen and the basket.

Algae

To restrict the growth of algae in the reservoir, it is recommended that the reservoir cover be kept in place and that all circulation lines be opaque. This will eliminate the entrance of light which is required for the growth of most common algae.

NESLAB recommends the use of Chloramine-T, one gram per gallon.

Section VII Service



For personal safety and equipment reliability, the following procedure should only be performed by a competent technician. Contact our Service Department for assistance (see Preface, After-sale Support).

Configuration

The unit top is secured to the cabinet by four ball stud retainers; one at each corner. Remove cabinet top by prying upward gently (cover pops off) in order to perform the following adjustments.

In some cases, the side access panels may need to be removed. The access panels are secured using screws installed up through the bottom of the cabinet.

Voltage Selection

Remove the top cover from the cabinet.

The VOLTAGE SELECT toggle switch is located on the right side of the control box (below the heat exchanger). Two ranges are available: 200-208V and 220-240V. Set the switch for the appropriate range.

Replace the top cover.

Fault Selection

Remove the top cover from the cabinet.

See Section V, Fault Interlock Modes for a discussion of these options. Locate the SHUTOFF/SIGNAL ONLY toggle switch on the right side of the control box (below the heat exchanger). Set the switch for the desired mode.

Replace the top cover.

Pressure Relief Valve

Units with other than a CP have a pressure relief valve located on the pump discharge line. The relief valve establishes the maximum operating pressure of the unit. If the pressure of the fluid leaving the pump exceeds the valve setting, the relief valve will bypass the fluid within the unit to relieve to the pressure. The relief valve does not determine the actual operating pressure; the actual operating pressure is determined by the flow control valve setting and pressure drop through the instrument being cooled.

If adjustment is necessary, consult our Service Department for assistance (see Preface, After-sale Support).

Fuses

Refer to the serial number label on the rear of the unit for the specific electrical requirements of your unit. Replacement fuses are 3/4 amp, time delay fuses. **Do not replace with an alternate amperage.**

Remove the top cover, the right access panel and the control box cover. The fuses are located inside the control box.

Phase Rotation

Three phase units with three phase pump motors are equipped with a phase rotation interlock.

This interlock prevents the unit from starting if the phase rotation is wrong. If the phasing is wrong, the PHASE light will light and the unit will not start.

Unplug the unit. Reverse any two power cord wires in the power cord plug.



Never remove the green ground wire.

Plug in the unit. The PHASE light should be off and the unit should start.

Section VIII Troubleshooting

Checklist

Unit does not start, FAULT light does not come on when STARTbutton is pushed.

- Check the voltage of the power source. Refer to the serial number on the rear of the unit for the specific electrical requirements of your unit. Make sure the voltage of the power source meets the specified voltage, ±10%.
- Check the fuses (see Section VII, Fuses).

When START switch is pushed, unit does not run, FAULT light comes on (SHUTOFF mode)

- Check fluid level in the reservoir. The low fluid level monitor prevents the unit from starting if the fluid level is below the safe operating level.
- Make sure the TEMPERATURE CONTROL setting is less than the HIGH TEMPERATURE LIMIT setting.

Unit runs, but FAULT light is on (SIGNAL ONLY mode)

- Check fluid level in the reservoir. The low fluid level monitor indicates a fault if the fluid level is below the safe operating level.
- Make sure the TEMPERATURE CONTROL setting is less than the HIGH TEMPERATURE LIMIT setting.

Unit continues to run for a short periods and then stops

- Check fluid level in the reservoir. If low, check the system for leaks.
- Make sure the heat load is not greater than the cooling capacity (see . Section II, Cooling Capacity).
- Make sure the cooling water supply meets the requirements outlined in Section III, Facility Water Requirements.
- Possible power interruption has occurred causing “latch” relay to unlatch. Attempt to restart.
- Ensure proper voltage (see Section III, Voltage Selection).

COOL light always on, temperature is not dropping

- Make sure the heat load is not greater than the cooling capacity (see . Section II, Specifications).
- Make sure the cooling water supply meets the requirements outlined in Section III, Facility Water Requirements.
- Clean the pump and facility water strainers, if applicable.

IDLE light always on, temperature is not rising

- Little, to no, heat load exists in instrument being cooled.

Service Assistance

If, after following these troubleshooting steps, your units fails to operate properly, contact our Service Department for assistance (see Preface, After-sale Support). Before calling please obtain the following information:

Part number

Serial number

Voltage of unit

Voltage of power source

Technical Support

Our Service Department can provide you with a complete list of spare parts for your unit (see Preface, After-sale Support). Before calling, please obtain the following information:

Part number

Serial number

Section IX Diagrams

Flow Diagram

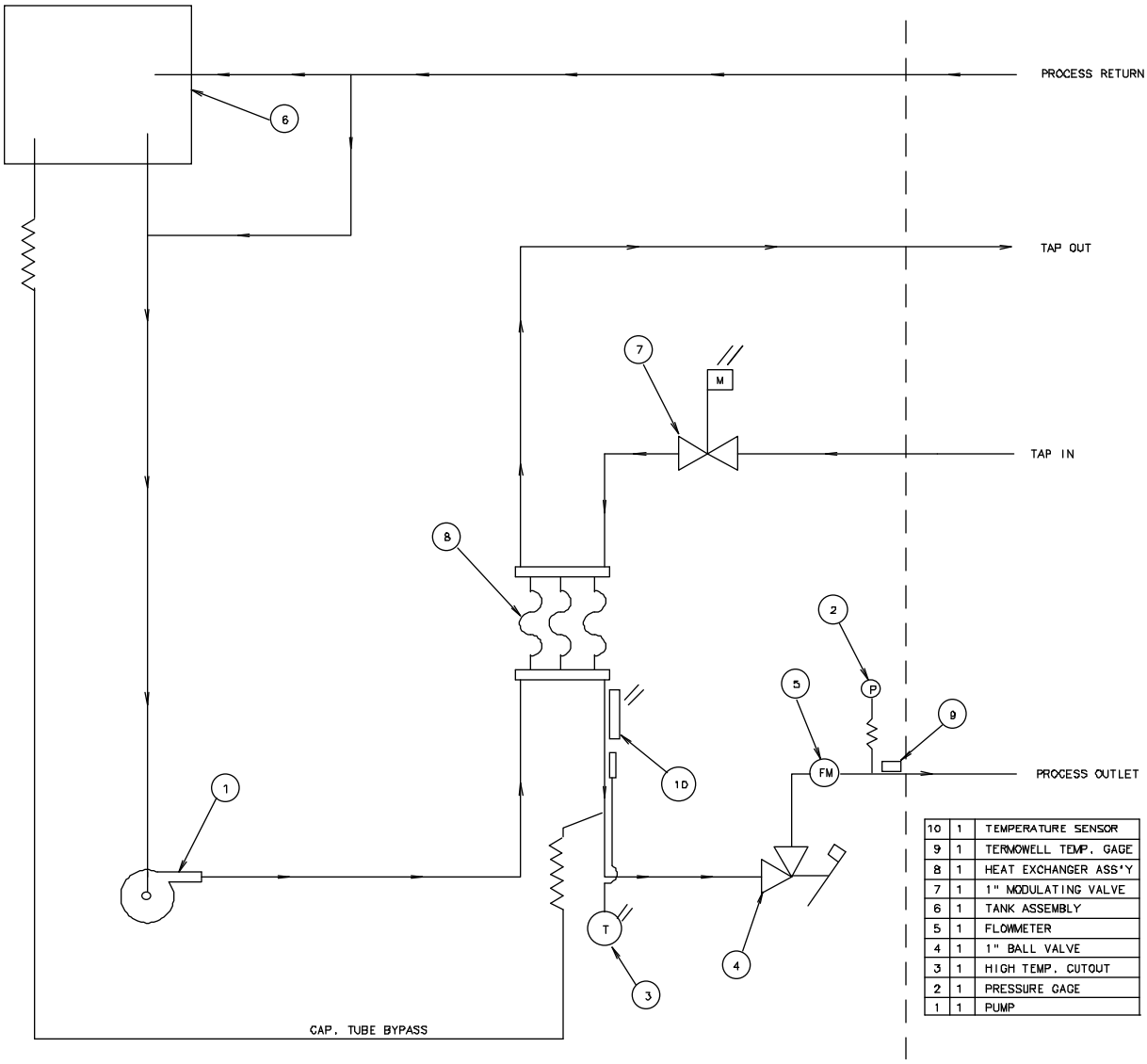

10	1	TEMPERATURE SENSOR
9	1	TERMOWELL TEMP. GAGE
8	1	HEAT EXCHANGER ASS'Y
7	1	1" MODULATING VALVE
6	1	TANK ASSEMBLY
5	1	FLOWMETER
4	1	1" BALL VALVE
3	1	HIGH TEMP. CUTOUT
2	1	PRESSURE GAGE
1	1	PUMP

WARRANTY

NESLAB Instruments, Inc. warrants for 12 months from date of shipment any NESLAB unit according to the following terms.

Any part of the unit manufactured or supplied by NESLAB and found in the reasonable judgment of NESLAB to be defective in material or workmanship will be repaired at an authorized NESLAB Repair Depot without charge for parts or labor. The unit, including any defective part must be returned to an authorized NESLAB Repair Depot within the warranty period. The expense of returning the unit to the authorized NESLAB Repair Depot for warranty service will be paid for by the buyer. NESLAB's responsibility in respect to warranty claims is limited to performing the required repairs or replacements, and no claim of breach of warranty shall be cause for cancellation or recision of the contract of sales of any unit.

With respect to units that qualify for field service repairs, NESLAB's responsibility is limited to the component parts necessary for the repair and the labor that is required on site to perform the repair. Any travel labor or mileage charges are the financial responsibility of the buyer.

The buyer shall be responsible for any evaluation or warranty service call (including labor charges) if no defects are found with the NESLAB product.

This warranty does not cover any unit that has been subject to misuse, neglect, or accident. This warranty does not apply to any damage to the unit that is the result of improper installation or maintenance, or to any unit that has been operated or maintained in any way contrary to the operating or maintenance instructions specified in NESLAB's Instruction and Operation Manual. This warranty does not cover any unit that has been altered or modified so as to change its intended use.

In addition, this warranty does not extend to repairs made by the use of parts, accessories, or fluids which are either incompatible with the unit or adversely affect its operation, performance, or durability.

NESLAB reserves the right to change or improve the design of any unit without assuming any obligation to modify any unit previously manufactured.

THE FOREGOING EXPRESS WARRANTY IS IN LIEU OF ALL OTHER WARRANTIES, EXPRESSED OR IMPLIED, INCLUDING BUT NOT LIMITED TO WARRANTIES OR MERCHANTABILITY AND FITNESS FOR A PARTICULAR PURPOSE.

NESLAB'S OBLIGATION UNDER THIS WARRANTY IS STRICTLY AND EXCLUSIVELY LIMITED TO THE REPAIR OR REPLACEMENT OF DEFECTIVE COMPONENT PARTS AND NESLAB DOES NOT ASSUME OR AUTHORIZE ANYONE TO ASSUME FOR IT ANY OTHER OBLIGATION.

NESLAB ASSUMES NO RESPONSIBILITY FOR INCIDENTAL, CONSEQUENTIAL, OR OTHER DAMAGES INCLUDING, BUT NOT LIMITED TO LOSS OR DAMAGE TO PROPERTY, LOSS OF PROFITS OR REVENUE, LOSS OF THE UNIT, LOSS OF TIME, OR INCONVENIENCE.

This warranty applies to units sold in the United States. Any units sold elsewhere are warranted by the affiliated marketing company of NESLAB Instruments, Inc. This warranty and all matters arising pursuant to it shall be governed by the law of the State of New Hampshire, United States. All legal actions brought in relation hereto shall be filed in the appropriate state or federal courts in New Hampshire, unless waived by NESLAB.

HX Series
Recirculating Chiller
TC-400 Controller

NESLAB Manual P/N U00244
Rev. 07/03/97

Installation, Operation, and Maintenance Manual



NESLAB online

Product Service Information, Electronic Catalog, Applications Notes, MSDS Forms, e-mail.

(603)427-2490

Set modem to 8-N-1 protocol, 1200 - 14400 baud

Voice Info: (800) 4-NESLAB

Comments on this manual can be sent to:

NESLAB@lifesciences.com

or visit our Web page at:

http://www.neslabinc.com

HX Series Recirculating Chiller
Installation, Operation, and Maintenance Manual

Table of Contents

PREFACE

Compliance 5
Unpacking 5
Warranty 5
After-sale Support 5

SECTION I
Safety

Warnings 6

SECTION II
General Information

Description 7
Specifications 8
Cooling Capacity 9
Pump Capacity 10

SECTION III
Installation

Site (Air-cooled Units) 12
Site (Water-cooled Units) 14
Electrical Requirements 16
Plumbing Requirements 17
Fluids 19
Water Quality Standards andRecommendations 20
Filling Requirements 21

SECTION IV
Temperature Controller

Controller Keypad 22
Status Indicators 23
Changing a Value 25
Controller Displays 25

SECTION V
Operation

Flow Control 28
Start Up 28
Pressure Gauge 28
Pressure Relief Valve 29
High Pressure Cutout 29
Pump Motor Overload Protector 30

SECTION VI
Optional Features

Automatic Refill Device 31
Heater Package 32
External Pressure Regulator 34
Remote Condenser 35
Nitrogen Purge 35
Particulate Filters 35

SECTION VII
Maintenance

Service Contracts 36
Condenser Cleaning 36
Algae 36

SECTION VIII
Service

Configuration 37
Reservoir Cleaning 38
Pump and Flow Switch Strainers 39
Pump Motor Lubrication 41
Phase Rotation 41
Suction Discharge Pressure and Speed Check 42

SECTION IX
Troubleshooting

Checklist 43
Service Assistance 43

SECTION X
Diagrams

Refrigeration Flow (HX-75 through HX-150) 44
Refrigeration Flow (HX-200 through HX-750) 44
Pump Flow (CP Pumps) 45
Pump Flow (PD and TU Pumps) 45
Dimensoins 46

APPENDIX A

Standard Analog Interface

APPENDIX B

Programming Software

WARRANTY

Quick Start Procedures Air-Cooled Models

Installation

Position the unit so the intake and discharge are not impeded. Inadequate ventilation will cause a reduction in cooling capacity and, in extreme cases, compressor failure.

Avoid excessively dusty areas and institute a periodic cleaning schedule. For proper operation, the unit needs to pull substantial amounts of air through a condenser. A build up of dust or debris on the fins of the condenser will lead to a loss of cooling capacity.

The unit will retain its full rated capacity in ambient temperatures up to approximately +24°C.

Ensure the voltage of the power source meets the specified voltage, ±10%.

The plumbing connections are located on the rear of the unit and are labelled SUPPLY and RETURN. These connections are ¾ inch FPT. Remove the plastic protective plugs from both plumbing connections. Connect the SUPPLY fitting to the inlet of your application. Connect the RETURN fitting to the outlet of your application.

To fill the reservoir open the access panel on the left rear corner of the case top and remove the reservoir cover by unscrewing the thumbscrews. Fill the reservoir to within one inch of the top. If the fluid capacity of your application and recirculation lines are significant, have extra fluid on hand.

Tap water is the recommended fluid for operation from +8°C to +80°C. Below +8°C, a non-freezing fluid must be used. A mixture of tap water and laboratory grade ethylene glycol is suggested.

Operation

Before starting the unit, double check all electrical and plumbing connections. Make sure the circulating system has been filled with cooling fluid.

On models HX-200 through HX-750, the unit must be connected to the power source for at least 12 hours to allow the oil to be heated and separated from the refrigerant

To start the unit, place the circuit breaker located on the rear of the unit to the on position. The MAIN indicator will illuminate. Place the ON/OFF switch to the ON position then press the ON/OFF key on the temperature controller. The unit will start and the SYSTEM and SYS ON indicators will illuminate. The controller will indicate the temperature of the reservoir fluid.

When the unit is shut off, wait five minutes before restarting to allow time for the refrigeration pressures to equalize. If the pressures are not allowed to equalize, the compressor will short-cycle and no cooling will occur.

Temperature Adjustment

To display the temperature setpoint, while in the Operator's Loop press and NEXT key. To adjust the temperature setpoint use the Setup Loop as described in this manual.

Flow Control

The RECIRCULATING FLOW CONTROL handle controls the flow rate to your application. In the “+” position you receive full flow, the “-” position is no flow.

Periodic Maintenance

Periodically inspect the reservoir fluid. If cleaning is necessary, flush the reservoir with a cleaning fluid compatible with the circulating system and the cooling fluid.

The cooling fluid should be replaced periodically. When operating at low temperatures, the concentration of water in the cooling fluid will increase over time, leading to a loss of cooling capacity.

Periodic vacuuming of the condenser fins is necessary. The frequency of cleaning depends on the operating environment. We recommend a visual inspection of the condenser be made monthly after initial installation. After several months, the cleaning frequency will be established.

Units with PD and TU pumps have a strainer. If debris is in the system, the strainer will prevent the material from being drawn into the pump and damaging the pump vanes.

After initial installation, the strainer may become clogged. The strainer must be cleaned after the first week of installation. After this first cleaning, a monthly visual inspection is recommended. After several months, the frequency of cleaning will be established.

Before cleaning the strainer, disconnect the power cord from the power source and drain the reservoir.

Quik Start Procedures Water-Cooled Models

Installation

Position the unit in a clean environment with easy access to facility cooling water and a drain. The facility water requirements must meet those specified in the instruction or unit performance will be derated.

Ensure the voltage of the power source meets the specified voltage, ±10%.

The plumbing connections are located on the rear of the unit and are labelled TAP WATER, DRAIN, SUPPLY and RETURN. Remove the plastic protective plugs from all the plumbing connections. Connect the TAP WATER fitting to the facility cooling water and the DRAIN fitting to a drain. Connect the SUPPLY fitting to the inlet of your application and the RETURN fitting to the outlet of your application.

To fill the reservoir open the access panel on the left rear corner of the case top and remove the reservoir cover by unscrewing the thumbscrews. Fill the reservoir to within one inch of the top. If the fluid capacity of your application and recirculation lines are significant, have extra fluid on hand.

Tap water is the recommended fluid for operation from +8°C to +80°C. Below +8°C, a non-freezing fluid must be used. A mixture of tap water and laboratory grade ethylene glycol is suggested.

Operation

Before starting the unit, double check all electrical and plumbing connections. Make sure the circulating system has been filled with cooling fluid.

Ensure the facility water is turned on.

On models HX-200 through HX-750, the unit must be connected to the power source for at least 12 hours to allow the oil to be heated and separated from the refrigerant

To start the unit, place the circuit breaker located on the rear of the unit to the on position. The MAIN indicator will illuminate. Place the ON/OFF switch to the ON position then press the ON/OFF key on the temperature controller. The unit will start and the SYSTEM and SYS ON indicators will illuminate. The controller will indicate the temperature of the reservoir fluid.

When the unit is shut off, wait five minutes before restarting to allow time for the refrigeration pressures to equalize. If the pressures are not allowed to equalize, the compressor will short-cycle and no cooling will occur.

Temperature Adjustment

To display the temperature setpoint, while in the Operator's Loop press and NEXT key. To adjust the temperature setpoint use the Setup Loop as described in this manual.

Flow Control

The RECIRCULATING FLOW CONTROL handle controls the flow rate to your application. In the "+" position you receive full flow, the "-" position is no flow.

Periodic Maintenance

Periodically inspect the reservoir fluid. If cleaning is necessary, flush the reservoir with a cleaning fluid compatible with the circulating system and the cooling fluid.

The cooling fluid should be replaced periodically. When operating at low temperatures, the concentration of water in the cooling fluid will increase over time, leading to a loss of cooling capacity.

Periodic vacuuming of the condenser fins is necessary. The frequency of cleaning depends on the operating environment. We recommend a visual inspection of the condenser be made monthly after initial installation. After several months, the cleaning frequency will be established.

Units with PD and TU pumps have a strainer. If debris is in the system, the strainer will prevent the material from being drawn into the pump and damaging the pump vanes.

After initial installation, the strainer may become clogged. The strainer must be cleaned after the first week of installation. After this first cleaning, a monthly visual inspection is recommended. After several months, the frequency of cleaning will be established.

Before cleaning the strainer, disconnect the power cord from the power source and drain the reservoir.

Preface

Compliance

Products tested and found to be in compliance with the requirements defined in the EMC standards defined by 89/336/EEC as well as Low Voltage Directive (LVD) 73/23/EEC can be identified by the CE label on the rear of the unit. The testing has demonstrated compliance with the following directives:

LVD, 73/23/EEC	Complies with UL 3101-1:93
EMC, 89/336/EEC	EN 55011, Class A Verification EN 50082-1:1992 IEC 1000-4-2:1995 IEC 1000-4-3:1994 IEC 1000-4-4:1995

For any additional information refer to the Letter of Compliance that shipped with the unit (Declaration of Conformity).

Unpacking

Retain all cartons and packing material until the unit is operated and found to be in good condition.

On units with a remote control box, the box is packed in a separate carton. Be sure to locate this separate carton; do not dispose of it by mistake.

If the unit shows external or internal damage, or does not operate properly, contact the transportation company and file a damage claim. Under ICC regulations, this is your responsibility.

Warranty

The unit has a warranty against defective parts and workmanship for one full year from date of shipment. Refer to the last page of this manual for complete warranty details.

After-sale Support

NESLAB is committed to customer service both during and after the sale. If you have questions concerning the operation of your unit or the information in this manual, contact our Sales Department. If your unit fails to operate properly or if you have questions concerning spare parts or Service Contracts, contact our Service Department.

Before calling, please refer to the serial number label on the rear of the case top to obtain the following information (see Section II, Description for the serial number label location):

- BOM number _____

- Serial number _____

Section I Safety

Warnings

Make sure you read and understand all instructions and safety precautions listed in this manual before installing or operating your unit. If you have any questions concerning the operation of your unit or the information in this manual, contact our Sales Department for assistance (see Preface, After-sale Support).

Performance of installation, operation, or maintenance procedures other than those described in this manual may result in a hazardous situation and may void the manufacturer's warranty.

Transport the unit with care. Sudden jolts or drops can damage the refrigeration lines.

Do not attempt to defeat any of the interlock switches or safety features built into the unit.

Observe all warning labels.

Never remove warning label.

Never operate damaged or leaking equipment.

Never operate the unit without cooling fluid in the fluid reservoir.

Make sure the unit is off before connecting or disconnecting the power cord or other cables.

Always turn off the unit and disconnect the power cord from the power source before performing any service or maintenance procedures, or before moving the unit.

Always empty the fluid reservoir before moving the unit.

Never operate equipment with damaged power cords.

Refer service and repairs to a qualified NESLAB technician.

In addition to the safety warnings listed above, warnings are posted throughout the manual. These warnings are designated by an exclamation mark inside an equilateral triangle with text highlighted in bold. Read and follow these important instructions. Failure to observe these instructions can result in permanent damage to the unit, significant property damage, or personal injury or death.

Section II General Information

Description

The HX Series Recirculating Chiller is designed to provide a continuous flow of cooling fluid at a constant temperature and volume.

The unit consists of an air-cooled or water-cooled refrigeration system, a fluid reservoir, a fluid recirculation pump, and a temperature controller.

HX units are available with a large number of options. This manual explains how to install, operate, and maintain a “standard” HX unit. This manual also explains some of the available options. Supplemental manuals are supplied with units equipped with options not covered in this manual.

Throughout the manual, you will be asked to consult the unit’s serial number label, or the pump identification label, or both, for specific information. Both labels are located on the rear of the case top.

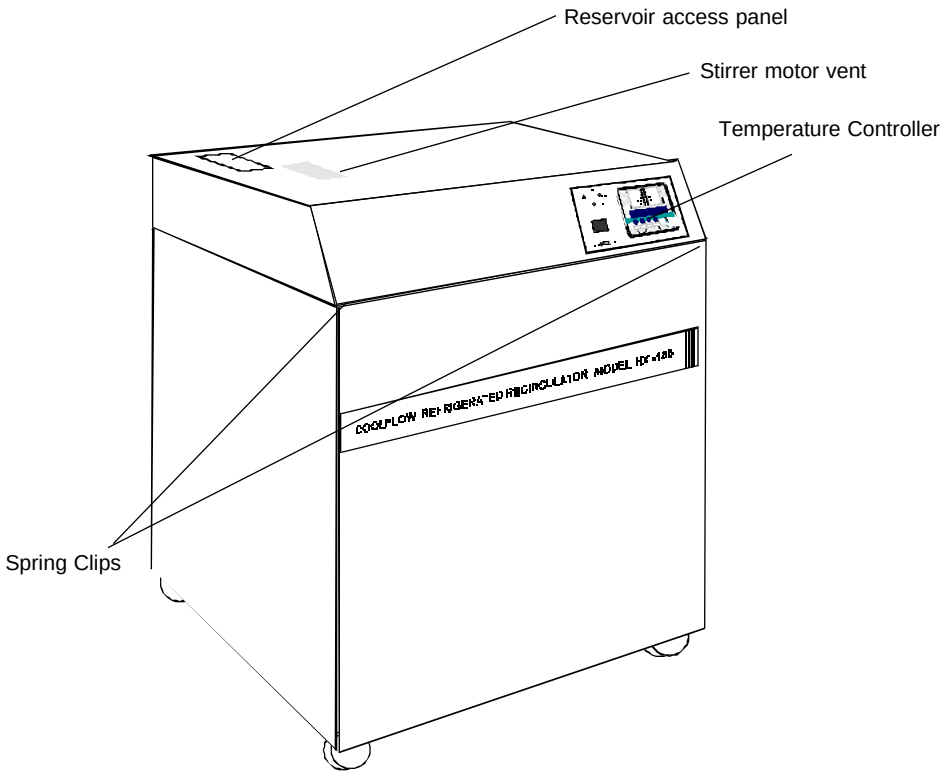

Specifications

	HX-75	HX-100	HX-150
Temperature Range	+5°C to +35°C		
Temperature Stability	±0.1°C		
Unit Dimensions (H x W x D) *Inches* *Centimeters*	36 ¾ x 23 ¼ x 18 ¾ 93.3 x 59.0 x 47.6	40 5/8 x 26 ¼ x 21 1/8 103.2 x 66.6 x 53.6	
Reservoir Volume *Gallons* *Liters*	5.0 19.0	8.0 30.3	
Shipping Weight *Pounds* *Kilograms*	261 118	300 136	320 145

	HX-200	HX-300	HX-500	HX-750
Temperature Range	+5°C to +35°C			
Temperature Stability	±0.1°C			
Unit Dimensions[1] (H x W x D) *Inches* *Centimeters*	46 7/8 x 33 ¾ x 25 ¼ 119.1 x 85.7 x 64.1		51 5/8 x 46 x 28 ¾ 131.1 x 116.8 x 73.0	64 ¾ x 46 x 29 163.2 x 116.8 x 73.6
Reservoir Volume *Gallons* *Liters*	15.0 56.8		28.0 106.0	40.0 151.0
Shipping Weight *Pounds* *Kilograms*	471 214	531 241	746 338	971 440

1. The model HX-750 with a water-cooled refrigeration system has the same dimensions as the HX-500. For additional dimensions see page 46.

Cooling Capacity

Cooling capacity will vary depending on fluid temperature, ambient temperature, and cooling fluid.

Cooling capacities for models HX-75 through HX-750 were obtained under the following conditions:

1. *air-cooled unit operating at +20°C (+68°F) ambient temperature.*
2. *cooling fluid with specific heat of 1.0 was used for fluid temperatures from +5°C to +35°C.*

HX-75, 100, & 150

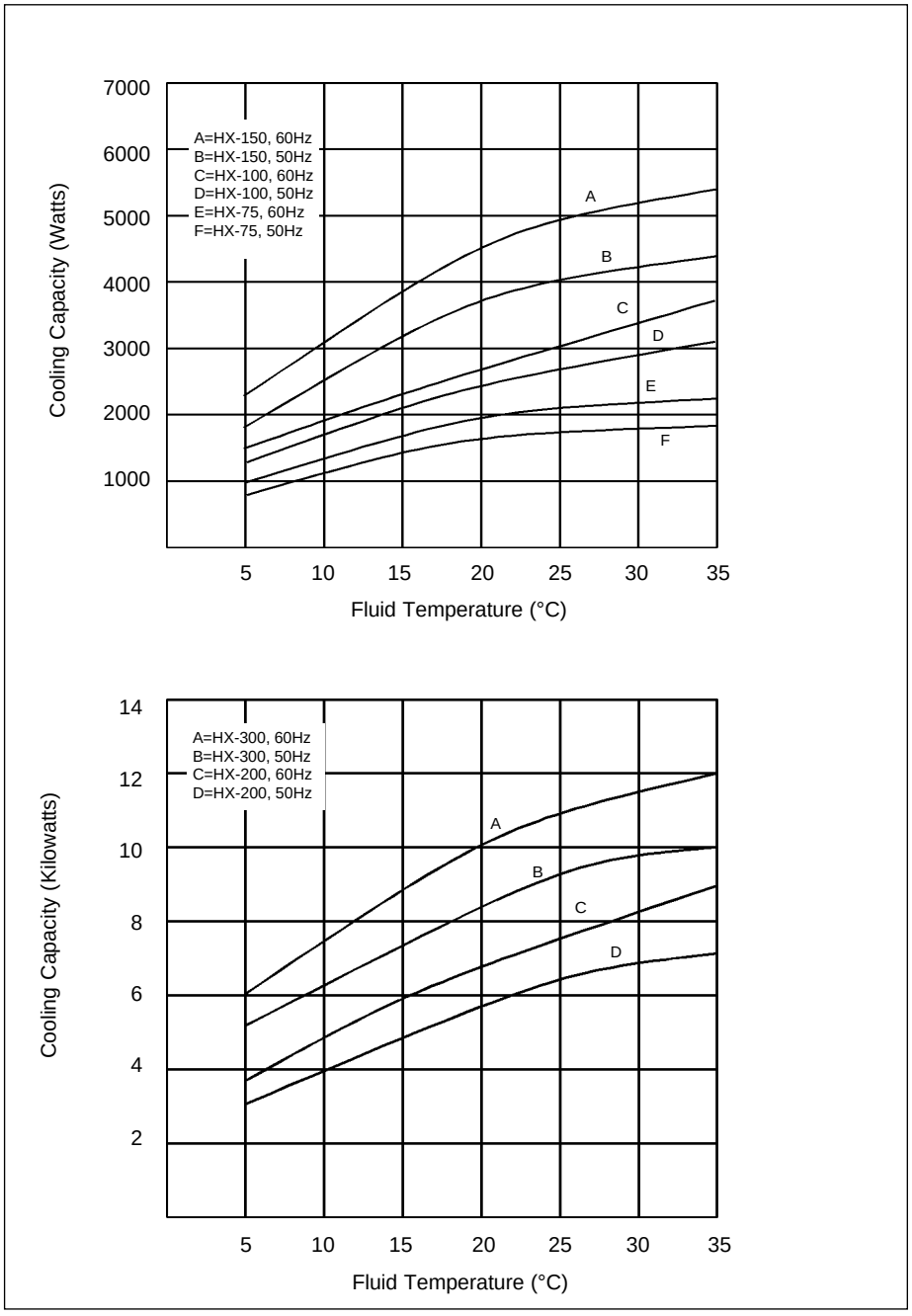

HX-200 & 300

HX-500 & 750

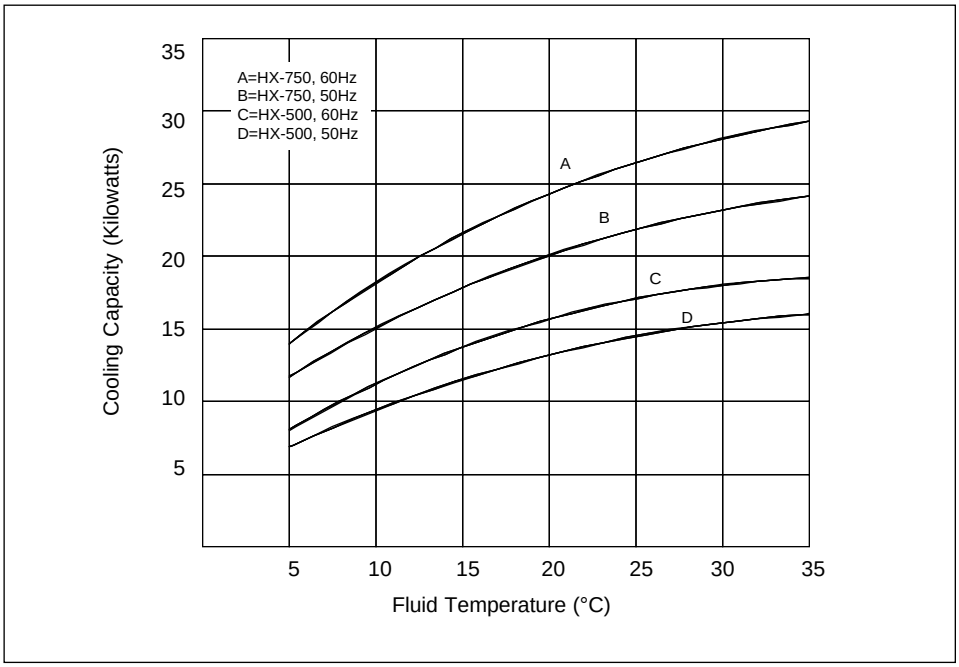

Pump Capacity

HX units are available with one of three standard pump types: positive displacement (PD), centrifugal (CP), and turbine (TU). Refer to the pump identification label on the rear of the case top or rear of analog temperature controller to identify the specific pump in your unit.

PD1, PD2 & TU1

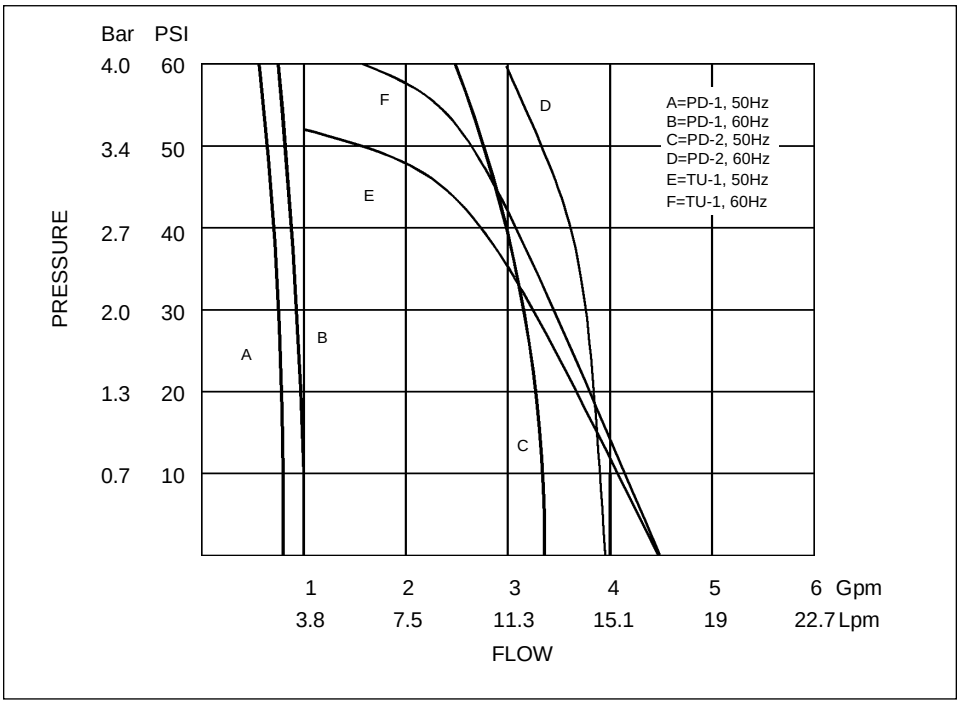

CP

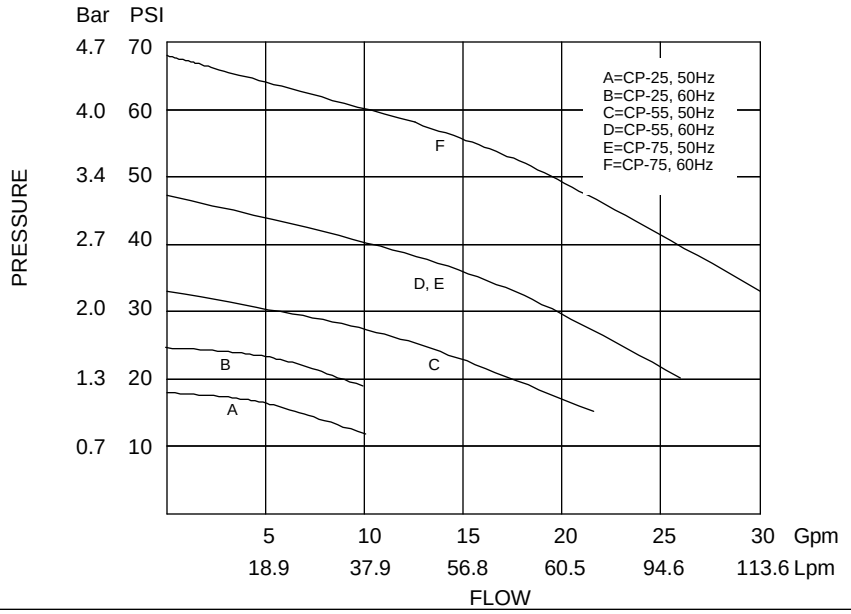

TU-3, 5 & 6

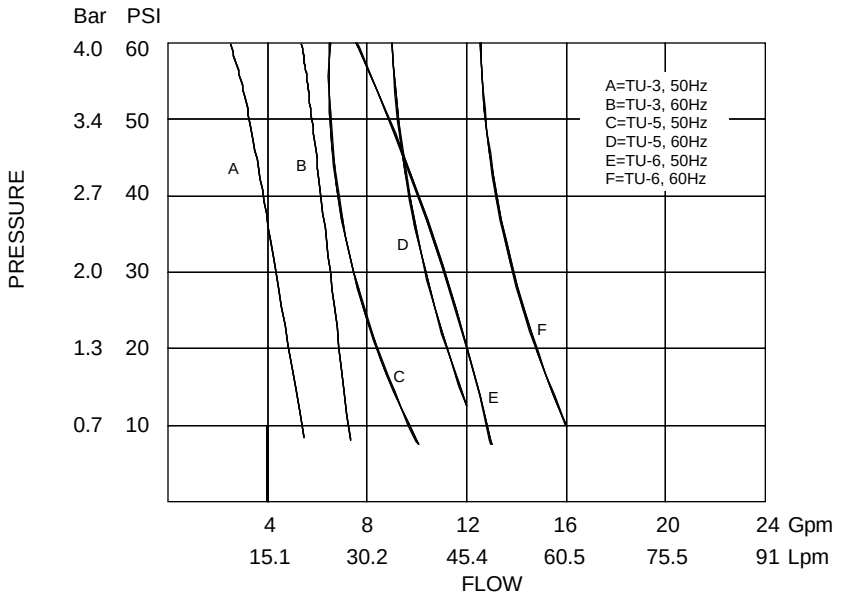

TU-7, 8 & 9

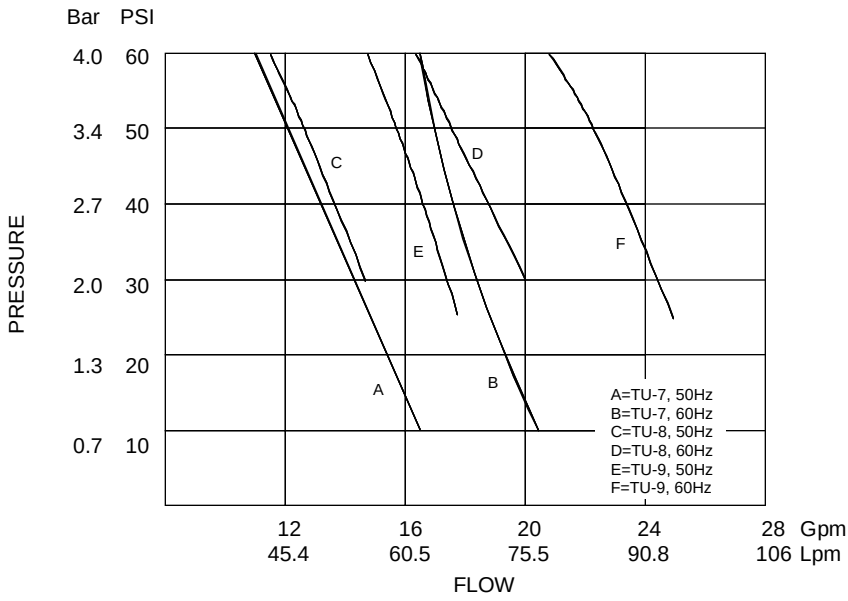

Section III Installation

Site (Air-cooled Units)

The unit should be located in a laboratory or clean industrial environment where ambient temperatures are inside the range of +55°F to +95°F (+13°C to +35°C).

The unit will retain its full rated capacity in ambient temperatures to approximately +75°F (+24°C). Above +75°F, derate the cooling capacity 1% for every 1°F above +75°F, to a maximum ambient temperature of +95°F. In degrees Celsius, derate the cooling capacity 1% for every 0.5°C above +24°C, to a maximum ambient temperature of +35°C.



Never place the unit in a location where excessive heat, moisture, or corrosive materials are present.

The unit has an air-cooled refrigeration system. It must be positioned so the air intake and discharge are not impeded.

On models HX-75 through HX-150, air is drawn through the left side of the unit and discharged through the right and rear. A minimum clearance of 2 feet (0.6 meter) on these three sides is necessary for adequate ventilation.

On models HX-200 through HX-750, air is drawn through the front of the unit and discharged through the side and rear panels. A minimum of 5 feet (1.5 meters) on all four sides of the unit is necessary for ventilation.

In some applications where space is at a premium, the minimum ventilation clearance can be compromised. However, consult our Sales Department before positioning the unit in a location with less minimum clearance than listed above. Inadequate ventilation will cause a reduction in cooling capacity and, in extreme cases, compressor failure.

Excessively dusty areas should be avoided and a periodic cleaning schedule should be instituted (see Section VII, Condenser Cleaning).

On models HX-100 through HX-750 the stirrer motor is located under the case top. (Models HX-500 and HX-750 have two stirrer motors.) Heat generated by the stirrer motor is discharged through vents in the case top. Do not block the vents. A minimum clearance of 2 inches (5 centimeters) is necessary for adequate ventilation. See illustration on page 7.

NOTE: Units with plate heat exchangers do not have stirrer motors.



NOTE: The HX-750 380/480V model contains a three phase condenser fan motor. It is possible to misconnect the main power and have the motor turn in the wrong direction resulting in incorrect airflow over the condenser. Proper airflow is achieved by exchanging any two main power connectors.

Refer to the table below to determine the approximate amount of air intake required for the unit to retain its full rated capacity. If the air intake does not meet these standards, cooling capacity will be derated.

	HX-75	HX-100	HX-150	HX-200
Air Intake				
Cubic feet per minute	600	710	1050	2000
Liters per minute	17000	20100	29730	56640

	HX-300	HX-500	HX-750
Air Intake			
Cubic feet per minute	1900	5000	5600
Liters per minute	53800	141750	158800

Site (Water-cooled units)

The unit should be located in a laboratory or clean industrial environment with easy access to a facility cooling water supply and a drain.

All units are equipped with castors for easy movement. This allows the unit to be placed in a small area, as long as there is ample space for the unit to be moved for access on all four sides. A minimum access clearance of 3 feet (1 meter) on two adjacent sides is recommended.

The facility cooling water supply must meet or exceed the requirements listed in the table shown on the next page for the unit to operate at its full rated capacity. If the facility cooling water does not meet these standards, the cooling capacity will be derated.

As the temperature of the cooling water supply increases, the required flow rate and pressure of the cooling water supply increases.

For example, with a model HX-150, if the temperature of the cooling water supply is +65°F, the flow rate must be at least 1.5 gallons per minute, with a pressure differential of at least 3.5 PSI. However, if the temperature of the cooling water supply is +85°F, the flow rate must be at least 4.0 gallons per minute, with a pressure differential of at least 10 PSI.

If the unit is being used with a building water supply, the back pressure of the drain must be less than the supply pressure.

A water regulating valve, located in the TAP WATER line, regulates the flow rate of the cooling water supply as it enters the unit. The valve regulates the flow rate based on the heat load. Flow through the unit stops automatically when the unit is shut off.

On models HX-100 through HX-750 the stirrer motor is located under the case top. (Models HX-500 and HX-750 have two stirrer motors.) Heat generated by the stirrer motor is discharged through vents in the case top. Do not block the vents. A minimum clearance of 2 inches (5 centimeters) is necessary for adequate ventilation. See illustration on page 7.

NOTE: Units with plate heat exchangers do not have stirrer motors.

	Temperature of cooling water supply			
	+55°F (+13°C)	**+65°F (+18°C)**	**+75°F (+24°C)**	**+85°F (+29°C)**
HX-75				
Flow Rate				
Gallons per minute	0.75*	1.0	1.5	3.0
Liters per minute	2.8*	3.7	5.7	11.4
Pressure Drop				
PSI	1.5*	2.0	3.5	8.0
Bar	0.10*	0.13	0.24	0.55
HX-100				
Flow Rate				
Gallons per minute	1.0*	1.5	2.0	3.5
Liters per minute	3.8*	5.7	7.6	13.2
Pressure Drop				
PSI	2.0*	3.5	5.0	10.0
Bar	0.13*	0.24	0.34	0.69
HX-150				
Flow Rate				
Gallons per minute	1.0*	1.5	2.5	4.0
Liters per minute	3.8*	5.7	9.5	15.1
Pressure Drop				
PSI	2.0*	3.5	6.0	10.0
Bar	0.13*	0.24	0.41	0.69
HX-200				
Flow Rate				
Gallons per minute	1.8*	2.5	3.5	6.0
Liters per minute	6.8*	9.5	13.2	22.7
Pressure Drop				
PSI	5.0*	6.0	7.0	18.0
Bar	0.34*	0.41	0.48	1.24
HX-300				
Flow Rate				
Gallons per minute	2.5*	4.0	6.5	11.0
Liters per minute	9.5*	15.1	24.6	41.6
Pressure Drop				
PSI	6.0*	8.0	13.5	25.0
Bar	0.41*	0.55	0.93	1.72
HX-500				
Flow Rate				
Gallons per minute	3.5	5.0	8.0	16.0
Liters per minute	13.2	18.9	30.3	60.6
Pressure Drop				
PSI	13.0	17.0	23.0	57.0
Bar	0.89	1.17	1.58	3.93
HX-750				
Flow Rate				
Gallons per minute	6.0	8.0	12.5	16.6
Liters per minute	22.7	30.3	47.3	62.8
Pressure Drop				
PSI	14.0	20.0	28.5	40.0
Bar	0.96	1.38	1.96	2.76

*Estimater Value

Electrical Requirements

Refer to the table below to determine the unit's electrical requirements. Verify the requirements by reviewing the ratings listed on the serial number label on the rear of the case top or rear of analog temperature controller.

	HX-75	HX-100	HX-150
Volts	208/230 220/240		
Hertz	60 50		
Phase	1 1		
Plug	NEMA L6-30P or L6-20P		

	HX-200	HX-300	HX-500	HX-750
Volts	208/230 200/220	380/420	208/230	380/420
Hertz	60 50	50	60	50
Phase	3 3	3	3	3
Plug	NEMA L15-30P or L16-20P		N/A	

Make sure the voltage of the power source agrees with the unit's voltage and frequency rating. The unit is designed to tolerate deviations of ±10% from the rated line voltage.

Models HX-75 through HX-300 have an 8 foot (2.4 meter) power cord installed on the unit at the time of shipment.

NOTE: Custom units equipped with heaters may not have a power cord. See Section VI, Special Features.

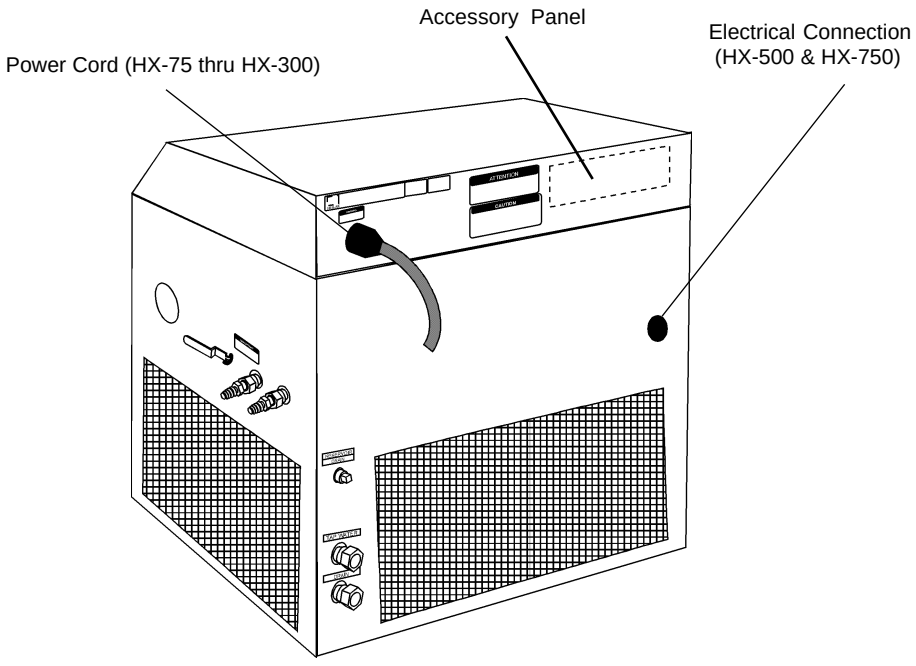



The unit construction provides extra protection against the risk of electric shock by grounding appropriate metal parts. The extra protection may not function unless the power cord is connected to a properly grounded outlet. It is the user's responsibility to assure a proper ground connection is provided.

Models HX-500 and HX-750 are not equipped with a power cable. Installation of the cable is the user's responsibility. Wire the unit in conformance to local, state, and federal electrical codes. Double check all wiring to make sure it is properly connected and protected from the elements.

Models HX-200 through HX-750 are equipped with a compressor crankcase heater. The crankcase heater warms the oil in the compressor and prevents refrigerant from mixing with the oil. Before start up, the unit must be connected to its power source for at least 12 hours. This allows time for the oil to be heated and separate from the refrigerant.

Plumbing Requirements

Air-cooled and water-cooled units

Before installing the unit to an instrument that previously used tap water as a cooling fluid, flush the instrument several times to remove any rust or scale that has built up. Consult the manufacturer of the instrument for a cleaning fluid recommendation.

The plumbing fittings used to connect the HX to the instrument being cooled are located on the right side of the unit (labelled SUPPLY and RETURN). These connections are ¾ inch FPT.

Remove the protective plugs from the SUPPLY and RETURN connections. Connect the SUPPLY fitting to the inlet of the instrument being cooled. Connect the RETURN fitting to the outlet of the instrument being cooled.

The RESERVOIR DRAIN connection, located on the rear of the unit, is a ½ inch FPT fitting connected internally to the unit's fluid reservoir. This fitting is for draining the reservoir. The unit is shipped with a ½ inch MPT plug installed in this fitting. Remove the plug to drain the reservoir.

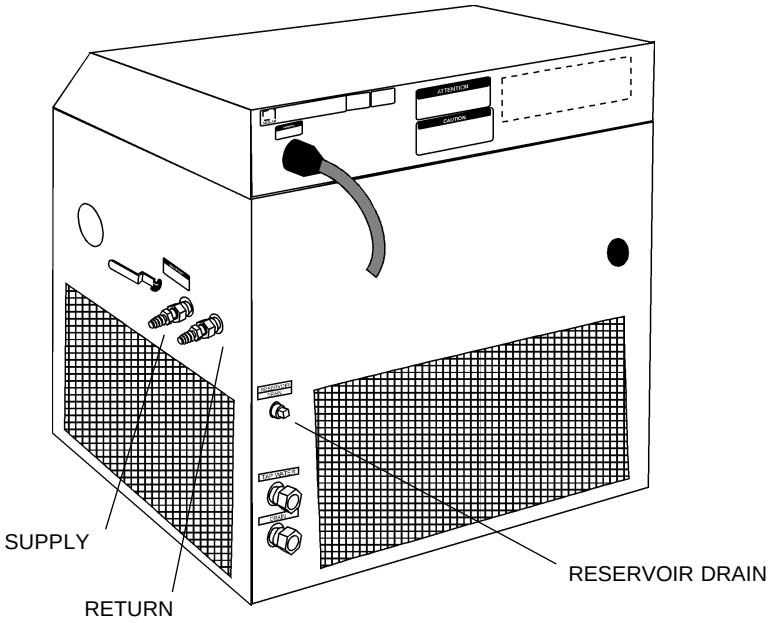

Two plumbing adapters (¾ inch MPT x 5/8 inch hose) are included with the unit. If the unit is being plumbed to the instrument being cooled using flexible tubing, install the adapters in the SUPPLY and RETURN plumbing ports. To prevent leaking, wrap the threads of the adapters with Teflon® sealing tape before installing them in the plumbing ports. The adapters will accept ½ or 5/8 inch ID flexible tubing.

If the unit is "hard plumbed" to the instrument being cooled or to the cooling water supply, damage can occur if the unit is bumped or jolted from its site. Provisions should be made to prevent the unit from being moved after installation. Once the unit is plumbed, secure the locking castors on the unit's base. If the unit is located in a heavy traffic area where the possibility of collision is imminent, it may be necessary to secure the unit to the site using blocks or mounting brackets.

Flexible tubing, if used, should be heavy wall or reinforced construction. All tubing should be rated to withstand 110 psi at +35°C. Make sure all tubing connections are securely clamped. Avoid running tubing near radiators, hot water pipes, etc. If substantial lengths of tubing are necessary, insulation may be required to prevent loss of cooling capacity.

Tubing and insulation are available from NESLAB. Contact our Sales Department for more information (see Preface, After-sale Support).

It is important to keep the distance between the unit and the instrument being cooled as short as possible, and to use the largest diameter tubing practical. Tubing should be straight and without bends. If diameter

reductions must be made, they should be made at the inlet and outlet of the instrument being cooled, not at the HX.

If substantial lengths of connecting tubing are required, they should be pre-filled with cooling fluid before connecting them to the unit.

Water-cooled units
The plumbing connections used to connect the water-cooled condenser in the HX to the facility cooling water supply are located at the rear of the unit (labelled TAP WATER and DRAIN). On models HX-75 through HX-300, these fittings are ½ inch FPT. On models HX-500 and HX-750, these fittings are 1 inch FPT.

Remove the plastic protective plugs from the TAP WATER and DRAIN connections. Connect the TAP WATER fitting to the facility cooling water supply. Connect the DRAIN fitting to a drain.

Fluids

The selected cooling fluid must have a viscosity of 50 centistokes or less at the lowest operating temperature.



If your unit is equipped with a plate heat exchanger, do not use 100% water as a recirculating fluid. Due to the physical nature of a plate heat exchanger, and its response to temperature changes, using 100% water may cause the plate heat exchanger to rupture.



Never use flammable or corrosive fluids with this unit. Distilled and deionized water may be aggressive and cause material corrosion. Please contact NESLAB before subjecting this unit to prolonged exposure to distilled or deionized water.

Tap water is the recommended fluid for operation from +8°C to +35°C. See Water Quality Standards and Recommendations in this section.

Below +8°C, a non-freezing solution is required. A 50/50 mixture, by volume, of water and laboratory grade ethylene glycol is suggested.



Do not use automobile anti-freeze. Commercial anti-freeze contains silicates that can damage the pump seals. Use of automobile anti-freeze will void the manufacturer's warranty.

For units with extended temperature ranges above +35°C, tap water is the recommended fluid up to +80°C. Above +80°C, the user is responsible for the fluid(s) used.

Water Quality Standards and Recommendations

	Permissible(PPM)	Desirable(PPM)
Microbiologicals		
(algae,bacteria,fungi)	0	0
Inorganic Chemicals		
Calcium	<40	0.6
Chloride	250	<25
Copper	1.3	1.0
Iron	0.3	<0.1
Lead	0.015	0
Magnesium	<12	0.1
Manganese	0.05	<0.03
Nitrates\Nitrites	10 as N	0
Potassium	<20	0.3
Silicate	25	<1.0
Sodium	<20	0.3
Sulfate	250	<50
Hardness	17	<0.05
Total Dissolved Solids	50	10
Other Parameters		
pH	6.5-8.5	7-8
Resistivity	0.01*	0.05-0.1*

* Megohm-Cm (Compensated at 25C)

Unfavorably high total ionized solids (TIS) can accelerate the rate of galvanic corrosion. These contaminants can function as electrolytes which increase the potential for galvanic cell corrosion and lead to localized corrosion such as pitting which can be observed at the studs and on the outside surface of cooling coils. Eventually, the pitting will become so extensive that the coil will leak refrigerant into the water reservoir.

As an example, raw water in the United States averages 171 ppm (as NaCl). The recommended level for use in a water system is between 0.5 to 5.0 ppm (as NaCl).

Recommendation: Initially fill the tank with distilled/deionized water. Do not use untreated tap water as the total ionized solids level may be too high.

Maintain this water quality at a resistivity of between 1 to 10 megohm-cm (compensated at 25°C) by using a purification system. Although the initial fill may be as high as 10 megohm-cm (compensated at 25°C), the desired level for long time usage is 1 to 3 megohm-cm (compensated at 25°C).

The above two recommendations will reduce the electrolytic potential of the water and prevent or reduce the galvanic corrosion observed.

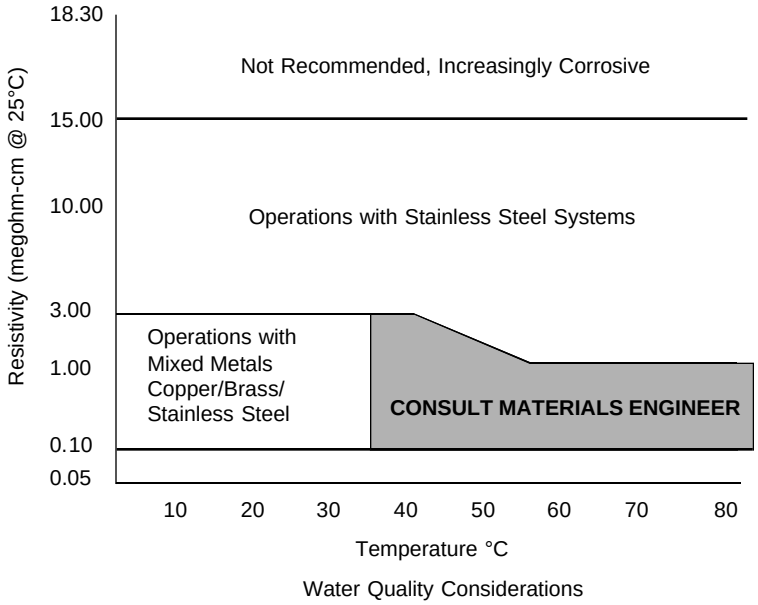

Filling Requirements

The reservoir access panel is located at the left rear corner of the case top. To open the access panel, slide the latch back (towards the rear of the unit) and lift.

The reservoir cover is located below the access panel. Loosen the thumbscrews and remove the reservoir cover.

Fill the fluid reservoir with cooling fluid to within 1 inch of the top.

The fluid capacity of the instrument being cooled and the recirculation lines may be significant. To prevent the lowering of the fluid level in the reservoir below the operating level, have extra cooling fluid on hand to keep the reservoir filled to within 1 inch of the top.

When the recirculating system is full, replace the reservoir cover and the access panel.

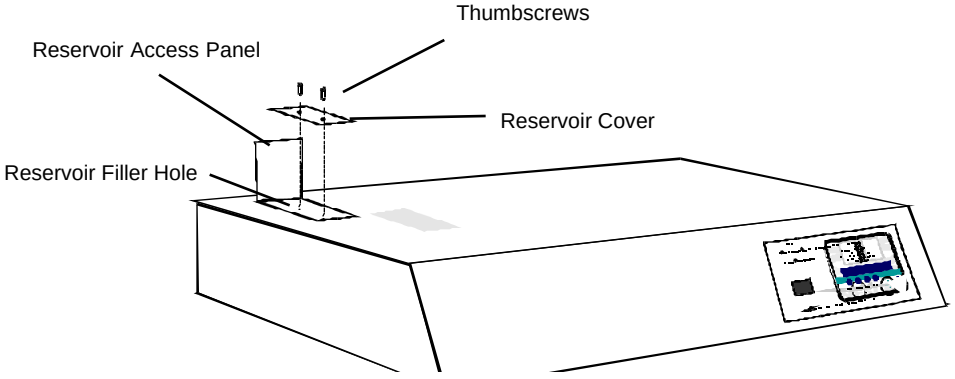

Section IV Temperature Controller

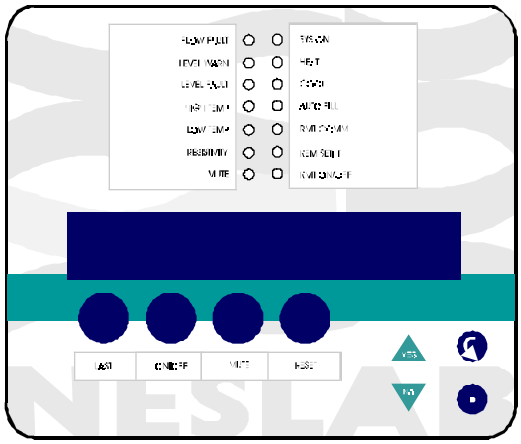

Controller Keypad

The front panel mounted unit/temperature controller allows the operator to start, control and monitor many features of the unit.

LAST
Scrolls backward through the menus.

ON/OFF
Energizes/De-energizes the unit.

MUTE
Toggles audible alarm silence function for the current alarm. When alarm is silenced, the MUTE LED lights.

RESET
Clears alarm indications after fault condition has been corrected. Alarm LEDs will remain lit after problem is eliminated to provide indication of problem cause for operator. RESET clears these indicators.

YES, ▲
Answers Yes to Y/N questions, increments numerical values upward for setting numeric values.

NO, ▼
Answers NO to Y/N questions, increments numerical values downward for setting numeric values.

NEXT
Scrolls forward through the menus.

ENTER 
Confirms entry of numeric values.

NOTE: If NEXT is pressed while the value still flashes, the new value will not be accepted. The display will stop flashing and the original value will be displayed. In this case the NEXT key can be used to abort data entry. The display will not sequence unless the NEXT key is depressed again.

For large Values, the displayed can be changed by manipulating the individual digits. Press YES and NO at the same time, the most significant digit will start to flash. The YES key increments and the NO key decrements the digit. Press the ENTER key to accept the digit and to move to the next most significant digit. Repeat until all digits are entered. Pressing the NEXT key before all digits are entered will abort the procedure and return the display to the original value.

The controller will not allow out to enter a value above the maximum or below the minimum value, or any illegal value. If you try to enter an illegal value the display will revert to its original value when the last digit was entered.

Status Indicators

Units can be configured in one of two ways. Units are designed to either shut down in the case of a fault, Cutout Option, or, for those customers willing to take the risk of damage to their unit in order to continue providing all available cooling to their application, a Switches Option. Contact our Service Department for more information.

Status indicators are provided to show the state of the various functions.

FLOW FAULT indicates the unit flow is too low. The unit will shut down.

LEVEL WARN indicates the reservoir level is below the float switch mounted in the reservoir. The unit will continue to run.

LEVEL FAULT indicates the reservoir level is too low for safe operation. The unit will shut down.

HIGH TEMP indicates that the reservoir temperature is above the high temperature limit setpoint.

If the reservoir temperature is started above the high limit setpoint the unit will continue to run and the HIGH TEMP indicator will continue to flash until the reservoir setpoint is below the high limit setpoint. Should the reservoir go above the high limit setpoint, a fault will be declared.

LOW TEMP indicates that the reservoir temperature is below the low temperature limit setpoint.

If a unit is started with the a reservoir temperature below the temperature limit setpoint, the unit will run and the LOW TEMP status indicator will continue to flash until the reservoir is above the low limit reservoir overtemperature switch. Should the reservoir temperature subsequently go below the low limit setpoint, a fault will be declared.

RESISTIVITY (Optional) displays measurement value on the controller and a 0-10VDC signal to the analog interface connector on the rear of he unit.

The controller is designed to measure and/or control resistivity. Should the resistivity go above the specific level set in the Setup Loop (see page 27), a warning will be declared.

MUTE indicates the buzzer has been turned off.

SYS ON indicates unit is running.

HEAT indicates a heater in the unit to maintain constant temperature to this application.

COOL indicates the refrigeration system is removing heat from the reservoir system to maintain constant temperature.

As the fluid temperature approaches the temperature setpoint, the COOL indicator cycles on and off to indicate the duty cycle of the system. The unit can be in COOL or HEAT mode, but never both at the same time. A balance between COOL and HEAT controls the temperature.

AUTO FILL (Optional) depends upon configuration of unit to automatically refill the reservoir.

RMT COMM (Optional) indicates the unit receives communication via the optional RS-232 interface from the remote computer equipped with NEScom software.

REM SETPT indicates the temperature is set from the remote computer.

RMT ON/OFF indicates unit is in either the remote or local mode.

Changing a Value

The **YES** key increments the value. The **NO** key decrements the value.

The display will flash as soon as either key is depressed, and will continue to flash until the **ENTER** key is pressed to accept the new value. The new value will not be used by the controller until the **ENTER** key is depressed and the display stops flashing.

If the **NEXT** key is pressed while the value is flashing, the new value will not be accepted. The display will stop flashing and the original value will be displayed. In this case the **NEXT** key can be used to abort data entry. The display will not sequence unless the **NEXT** key is depress again.

For large values the display can be changed by manipulating the individual digits. Press the **YES** key and the **NO** key at the same time. The most significant digit will start to flash. The **YES** key increments or the **NO** key decrements the digit. Press the **ENTER** key to accept the digit and to move to the next most significant digit. Repeat until all digits are entered. Pressing the **NEXT** key before all digit are entered will abort the procedure and return the display to the original value.

The controller will not allow you to enter a value above the maximum (+35°C) or below the minimum (5°C). If you try to enter an illegal value outside the operating range, the display will revert to its original value.

Controller Displays

An alphanumeric display presents numeric readings of various operating conditions within the chiller. Display function is selected by pressing the appropriate keys to move through a menu of available information.

An Operator's Loop and a Setup Loop loops allow you to display and/or alter different parameters of the controller. The Setup Loop can be accessed from the temperature display by pressing and holding the key combinations shown on Figure 1 on the next page.

When the controller is first powered up it goes through a short self test and then enters the Operator's Loop, displaying the reservoir fluid temperature.

NOTE: Should you desire to return to the temperature display and abort any changes, keep pressing the **NEXT** until the display reads **SAVE?** Press **NO.**

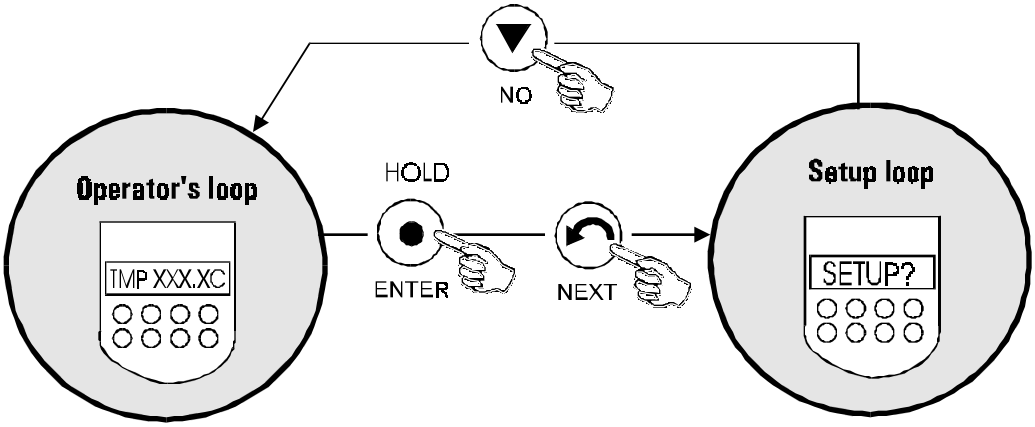

Figure 1 Changing Loops

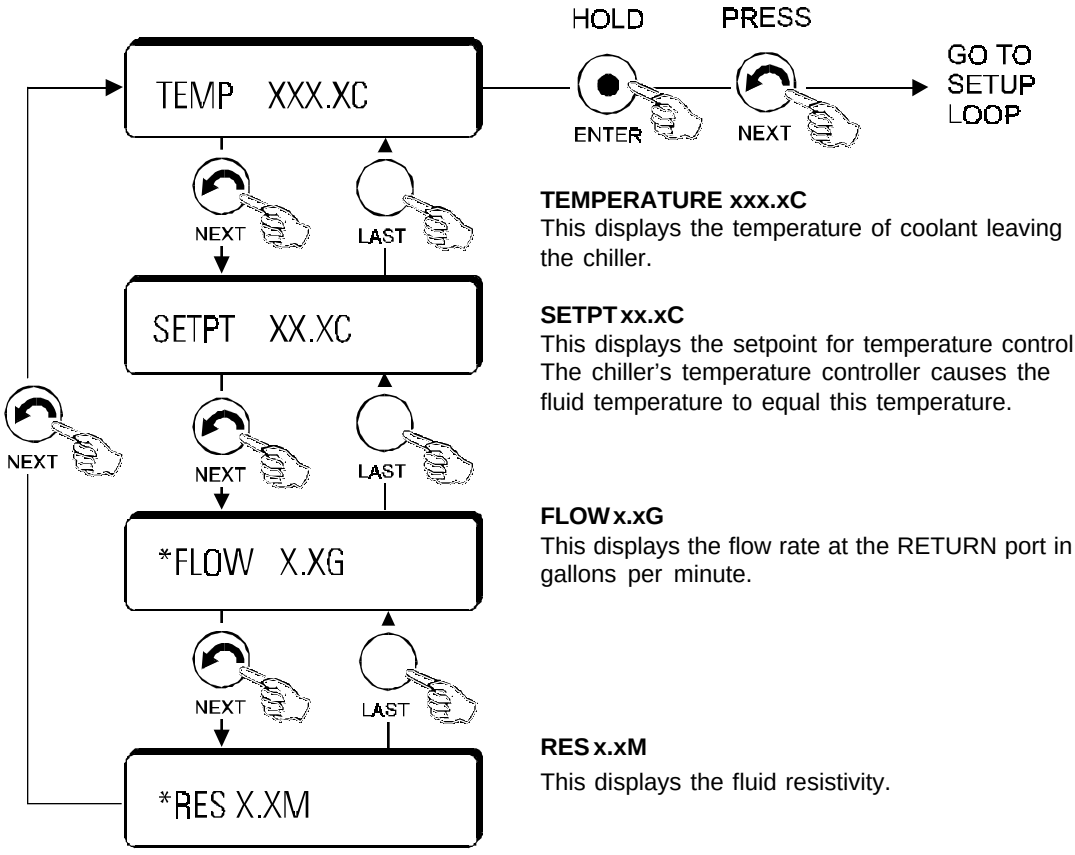

TEMPERATURE xxx.xC
This displays the temperature of coolant leaving the chiller.

SETPT xx.xC
This displays the setpoint for temperature control. The chiller's temperature controller causes the fluid temperature to equal this temperature.

FLOW x.xG
This displays the flow rate at the RETURN port in gallons per minute.

RES x.xM
This displays the fluid resistivity.

* Display is shown only when option is enabled in Configuration Loop, contact our Service Department for assistance.

Figure 2 Operator's Loop

Setup Loop

The setup loop allows the operator to change temperature and flow limits, and to change the tempraturre controller's tuning constants.

To enter this loop you must be in the operators loop and displaying temperature, see Figure 2. Depress and hold the **ENTER** key then press **NEXT**. Adjust values with the **YES** and **NO** keys. Press **ENTER** for the controller to accept each new entry.

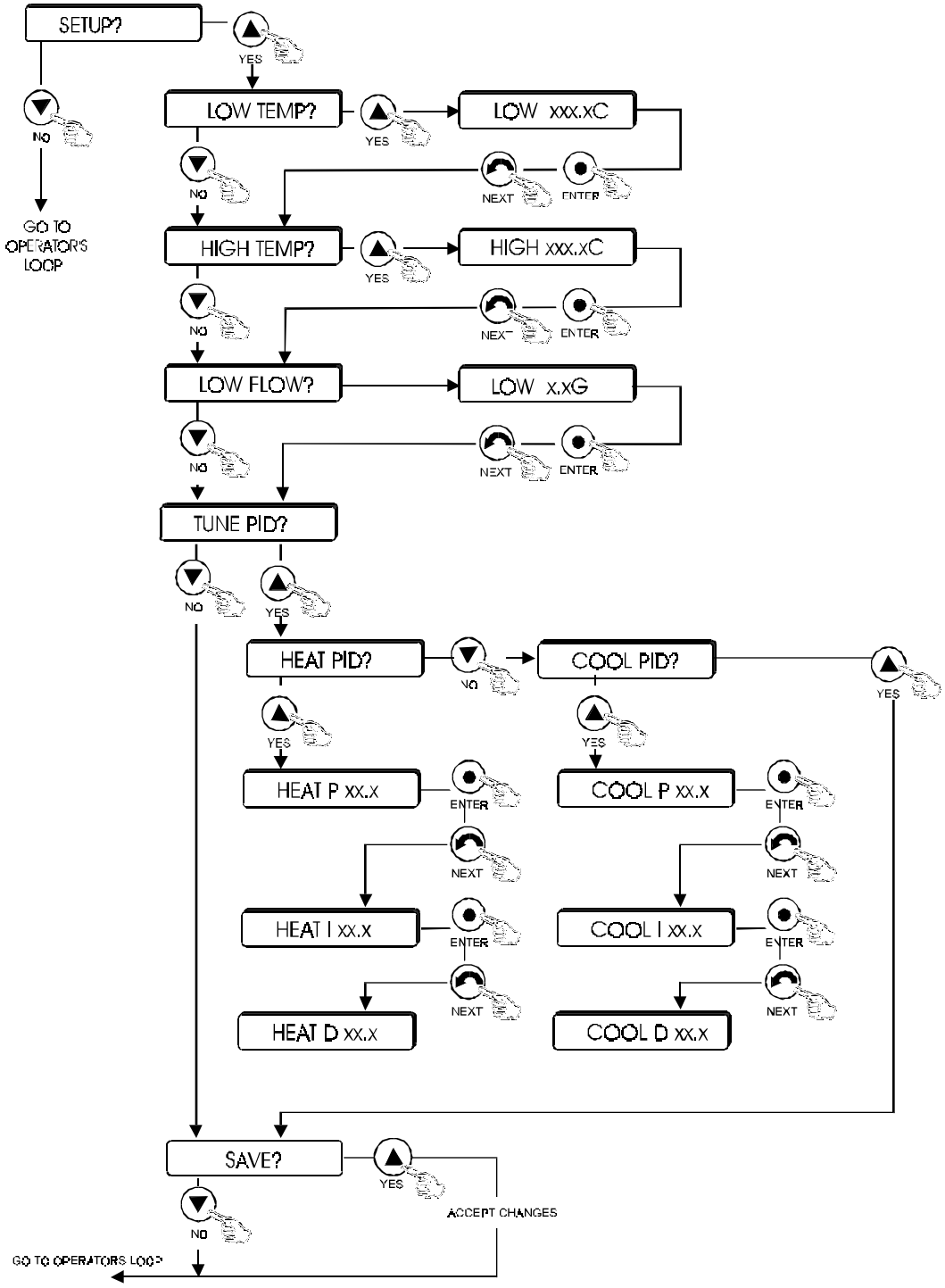

Figure 3 Setup Loop

Section V Operation

Flow Control

The RECIRCULATING FLOW CONTROL handle, located on the right-hand side of your unit, is connected to a valve that controls the flow rate of the cooling fluid to the instrument being cooled.

When the handle is in the “+” position, the valve is open and all possible cooling fluid is supplied to the instrument being cooled. When the handle is in the “-” position, the valve is closed and no cooling fluid is supplied to the instrument being cooled. When the handle is between these two positions, the flow rate of the cooling fluid is between full flow and no flow. Use a flow meter on the SUPPLY line to adjust the desired flow rate.

The flow control valve must be opened slightly to allow fluid to circulate through the flow switch that monitors the flow rate. A flow rate of more than 0.3 gallons per minute (1.0 liters per minute) is necessary. If the flow is completely shut off, or if the flow is not adequate, a low flow fault will occur and the unit will not start.

Never “crank” the valve wide open from the closed or slightly open position.

Start Up

For CE Mark units check the circuit breaker setting on the rear of the bonnet. With the breaker on the MAIN indicator will illuminate.

Models HX-200 through HX-750 are equipped with a compressor crankcase heater. The crankcase heater warms the oil in the compressor and prevents refrigerant from mixing with the oil. Before start up, the unit must be connected to its power source for at least 12 hours. This allows time for the oil to be heated and separate from the refrigerant.

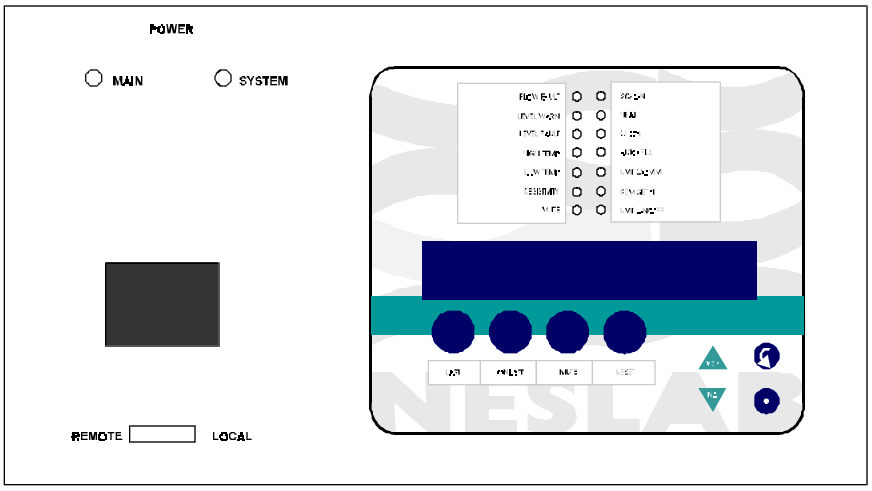



On water-cooled units, ensure the facility water is on and make sure the cooling water supply is connected to the TAP WATER connection, not the DRAIN connection.

Press the ON/OFF switch to the ON position. The MAIN indicator will illuminate. Press the ON/OFF key on the temperature controller. The unit will start and the SYSTEM and SYS ON indicators will illuminate. The controller will indicate the temperature of the reservoir fluid.

When the unit is shut off, wait approximately 5 minutes before restarting. This allows time for the refrigeration pressures to equalize. If the pressures are not allowed to equalize, the compressor will short-cycle (clicking sound) and no cooling will occur.

Pressure Gauge

The RECIRCULATING PRESSURE gauge is located next to the flow control handle. The gauge indicates the operating pressure of the system.

Pressure Relief Valve
(PD and TU Pumps Only)

Units with a PD-1, PD-2, or any TU type pump have an adjustable pressure relief valve. Refer to the pump identification label on the rear of the case top or rear of analog controller to identify the specific pump in your unit.

The pressure relief valve establishes the maximum operating pressure of the unit. If the pressure of the fluid leaving the pump exceeds the valve setting, the relief valve will bypass the fluid within the unit to relieve the pressure. The valve does not determine the actual operating pressure; the operating pressure of the system is determined by the back pressure of the connected equipment and the setting of the flow control valve. If adjustment seems necessary, consult our Service Department for assistance.

Before calling, refer to the serial number label on the rear of the case top to obtain the following:

- *BOM number*
- *Serial number*

High Pressure Cutout
(Water-Cooled Units Only)

Should the unit's refrigeration discharge pressure become too high the high pressure cutout will activate and shut down the unit. High pressures can be caused by a lack of cooling water to the compressor or debris in the refrigeration lines.

Once the cause of the problem has been identified and corrected you must manually reset the cutout. The cutout location depends on the size of your

unit. On the HX-75, it is behind the right side panel, on the HX-100 and HX-150 it is behind the left side panel, and on the HX-200 through HX-750 it is behind the rear panel.

Locate the white reset switch on the high pressure cutout. Press in on the switch until a "click" is heard. If the reset does not "click" the cutout was not activated and the unit shut down occurred for another reason.

Pump Motor Overload Protector

The overload protector prevents the pump motor from exposure to excessive current. If an overload fault occurs, due, for example, to excessive pressure or flow, or excessive ambient temperature, the overload protector will shut off the pump motor. The overload protector will automatically reset after approximately one to two minutes.

If a fault occurs, a SYS FAULT message appears on the controller and the pump will shut down.

The overload protector can be adjusted to require manual resetting after an overload fault. Contact our Service Department for adjustment instructions (see Preface, After-sale Support).

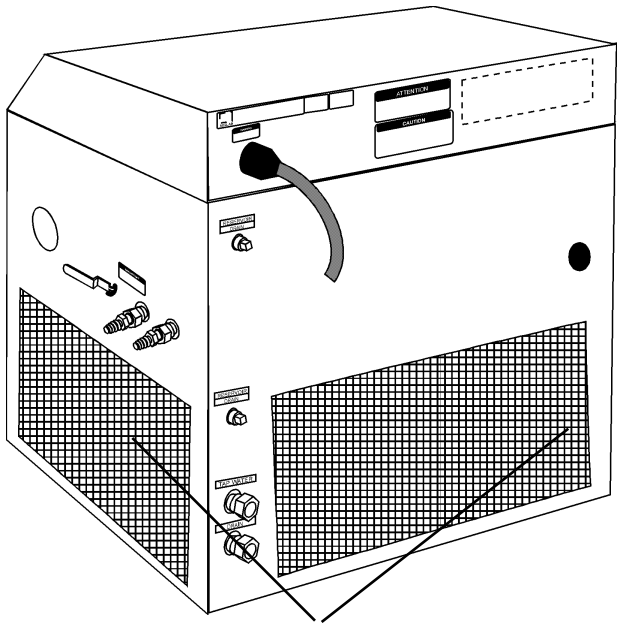

The pump motor overload protector is located directly under the fluid reservoir. It is in the left rear corner for HX200s and HX300s units. It is at the side access panel for HX500s and HX750s units.

Section VI Optional Features

Automatic Refill Device

The automatic refill device is designed to maintain the correct level of cooling fluid in the reservoir. The device consists of a float switch in the reservoir and a solenoid valve on top of the reservoir. If the cooling fluid level falls, the float switch will drop, opening the solenoid valve and allowing make-up fluid to fill the reservoir. Once the cooling fluid level reaches the proper level, the float switch will rise and the solenoid valve will close.

The plumbing connection for the refill device is located at the right rear corner of the unit and is labelled AUTO REFILL. This connection is a $^{3}/_{8}$ inch OD stainless steel barbed fitting.

Connect this fitting to a make-up fluid source using $^{5}/_{16}$ or $^{3}/_{8}$ inch ID flexible tubing. Make sure all tubing connections are securely clamped.

Tubing is available from NESLAB. Contact our Sales Department for more information (see Preface, After-sale Support).

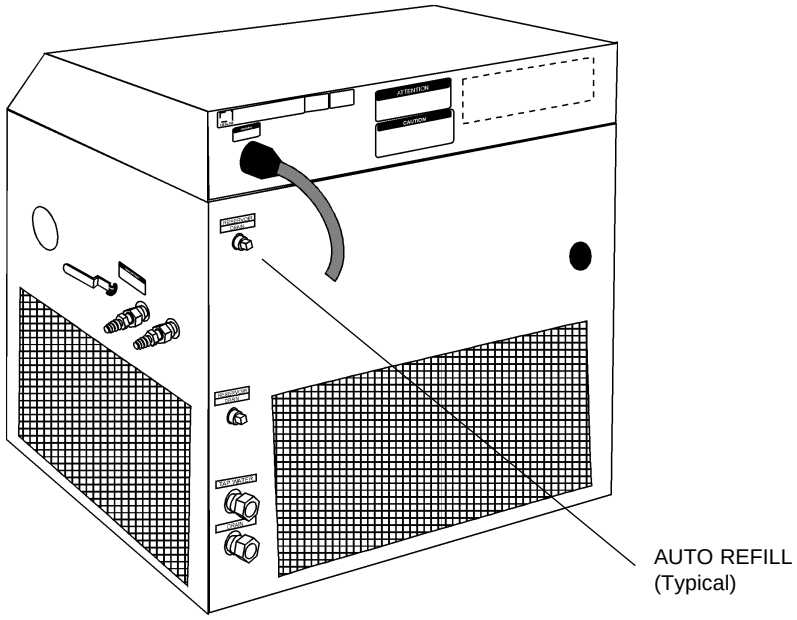

Heater Package

The heater package option consists of an immersion heater in the unit's fluid reservoir, a high temperature limit device, and a solid state zero-crossing relay. A HTC FAULT mesage on the controller will light if the high temperature limit device is tripped. The high temperature limit device will disconnect power to the heater if the heater surface temperature exceeds a preset limit.

Heater Package Control Box (Typical)

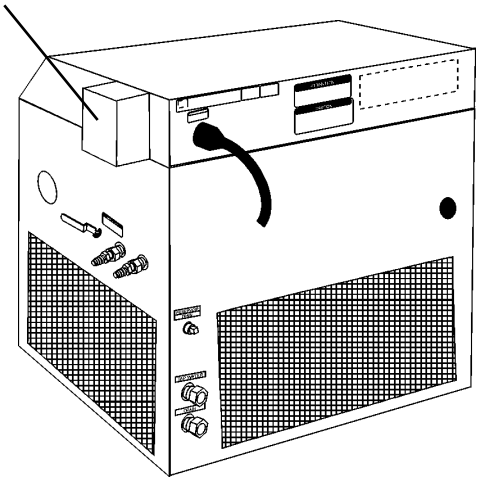

The heater surface temperature may operate several degrees higher than the reservoir fluid. The limit device is factory set to a temperature above the upper limit of the temperature controller's range.

For personal safety and equipment reliability, the following procedure must only be performed by a qualified technician. Contact our Service Department for assistance (see Preface, After-sale Support).

To reset a tripped temperature limit device, lift and open the case top. The case top is secured to the unit base by a hinge between the case top and the base (along the rear of the unit), and by two spring clips located at the front corners. To gain access to the temperature limit device, disengage the spring clips with a flat bladed screw driver and lift the front of the case top and tilt it back. A support brace, located on the right side of the inner case, will stop and support the case top.

You must identify and correct the fault before restarting the unit.

The protection device and the heater power connections are located in a small stainless steel box on top of the fluid reservoir. The protection device has a reset button and a temperature limit adjustment shaft. Press the reset button to restore operation.

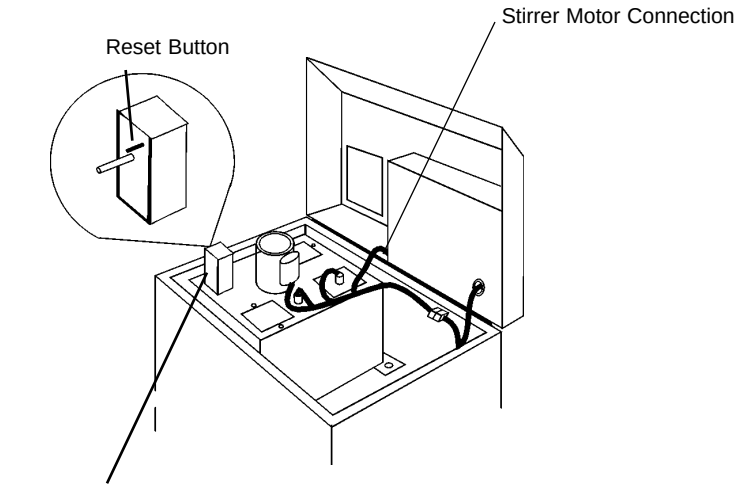

Some units equipped with heaters do not have a power cable. Installation of the cable is your responsibility. Wire the unit in conformance to local, state and federal electrical codes. Double check all wiring to make sure it is properly connected and protected from the elements.

The unit construction provides extra protection against the risk of electric shock by grounding appropriate metal parts. The extra protection may not function unless the power cord is connected to a properly grounded outlet. It is your responsibility to assure a proper ground connection is provided. For personal safety and equipment reliability, the following procedure should only be performed by a qualified technician.

To access the power cable connection box and install the cable:

- Lift the unit's bonnet.
- Remove the panel under the right half of the bonnet by removing the screws and the stirrer motor connection. (The stirrer motor connection is located at the lower left corner of the bonnet, see illustration above.)
- Remove the plastic plug on the rear of the bonnet. We recommend that you install an electrical conduit in place of the plastic plug.
- Insert your cable through the conduit.
- Locate the connection box and connect your cable to L1 and L2 (both connections are labeled) and to the ground stud (not labeled).
- Replace the panel and stirrer motor connection.

External Pressure Regulator

For applications requiring a maximum pressure less than 55 psi, an External Pressure Reducer (EPR) is available. An EPR allows an adjustable operating pressure of 10 to 50 psi. If the pressure of the fluid leaving the unit exceeds the valve setting the relief valve will bypass the fluid back into the unit to relieve the pressure. The pressure of the system is determined by the back pressure of the connected equipment and the flow rate of the recirculating fluid to your application.

Connect the EPR assembly as shown below. Tighten the hose clamps tight enough to prevent leakage. Do not over-tighten or the clamps will “bite” into the flexible tubbing and can cause excessive wear.

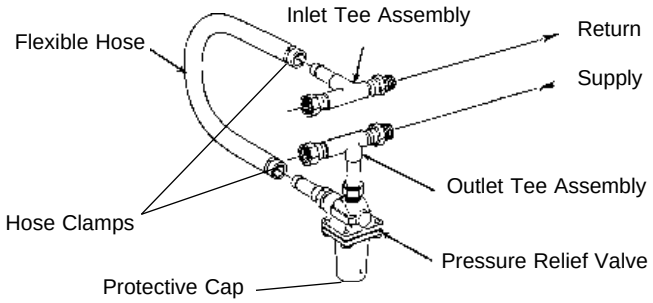

Connect the outlet tee assembly to the inlet of your application. Connect the inlet tee assembly to the outlet of your application.

Adjustment

When adjusting the relief valve some leaking may occur, place a container under the valve during adjustment.

Remove the protective cap and locate a threaded fitting with a slot for a large screwdriver. Hold the threaded fitting in place and loosen the lock nut on the valve body until it is almost flush with the threaded fitting. Unscrew the threaded fitting three to four turns. (If the threaded fitting unscrews completely from the valve housing, screw it back in two to three turns.)

To simulate blockage, close (or pinch off) the hose between the EPR outlet tee assembly and your application. Monitor the operating pressure of the HX unit. Turn the threaded fitting until the desired relief pressure is set (the EPR valve cannot be set lower than the total back pressure of your instrument, or flow will not be received).

Tighten the locknut to secure the position of the threaded fitting. Open the hose between the EPR outlet tee assembly and your application.

Remote Condenser

Units with the optional remote air-cooled condenser are equipped with high and low refrigeration pressure monitors. The monitors are connected internally to a pressure gauge that monitors refrigeration pressure at the suction side of the compressor. The monitors protect the refrigeration system from operating under excessively high and low refrigeration pressures. A pressure fault occurs when the refrigeration pressure exceeds the set pressure limit.

Any problem is indicated by a SYS FAULT message on the controller. In the event of either a low or high refrigeration pressure fault, the compressor will shut down. The pump and heater will continue to run. The compressor must be manually restarted after the cause of the fault has been identified and corrected.

Nitrogen Purge

Units equipped with nitrogen purge valves are designed to accept a constant flow of dry nitrogen into the reservoir. The nitrogen blankets the cooling fluid reducing fluid evaporation.

Remove the reservoir cover by removing the screws. Fill the reservoir with fluid. Replace the reservoir cover and screws. Connect the nitrogen line to the valve on the reservoir cover.

A pressure regulator, set to 0.5 psig (0.35 kg/cm^3) or lower, should be used to prevent fluid overflow.

Particulate Filters

Some custom units are fitted with particulate filter assemblies attached to the supply side of the recirculation water. The frequency for cleaning/changing the filter depends on your usage. Should the unit's performance be degraded, check the filter.

Filters are available from NESLAB, contact our Customer Service Center. Before calling refer to the serial number label on the rear of the unit to obtain the following information:

-BOM number
-Serial number

Section VII Maintenance

Service Contracts

NESLAB offers on-site Service Contracts that are designed to provide extended life and minimal down-time for your unit. For more information, contact our Service Department (see Preface, After-sale Support).

Condenser Cleaning (Air-cooled units only)

For proper operation, the unit needs to pull substantial amounts of air through a finned condenser. A build up of dust or debris on the fins of the condenser will lead to a loss of cooling capacity.

The frequency of cleaning depends on the operating environment. It is recommended that a visual inspection of the condenser be made monthly after initial installation. After several months, the frequency of cleaning will be established.

For "standard" air-cooled units, periodic vacuuming of the fins on the condenser is necessary.

For units with the optional remote air-cooled condenser, remove any debris from around the condenser site. If a visible accumulation of dust or dirt is found on the condenser fins, the condenser should be cleaned with a condenser cleaning solvent and rinsed with water.



Exercise caution not to damage the condenser fins or coil. Condenser fin or coil damage can result in a loss of performance and, in extreme cases, refrigeration system failure.

Algae

To restrict the growth of algae in the fluid reservoir, it is recommended that the reservoir cover be kept in place and that all recirculation lines be opaque. This will eliminate the entrance of light which is required for the growth of most common algae.

NESLAB recommends the use of Chloramine-T, one gram per gallon.

Section VIII Service

For personal safety and equipment reliability, the following procedure should only be performed by a qualified technician. Contact our Service Department for assistance (see Preface, After-sale Support).

Configuration

Case Top

The unit has a hinged case top to allow service access. The case top is secured to the top of the unit base by a hinge between the case top and base (along the rear of the unit), and by two spring clips located at the front corners, see illustration on page 7. To gain access to the pump assembly or the reservoir area, disengage the spring clips with a flat bladed screw driver and lift the front of the top cover and tilt it back. A support brace, located on the right side of the inner base, will stop and support the case top. Ensure the spring clips engage when the top is lowered back into position.

Reservoir Cover

Access to the inside of the fluid reservoir is necessary to clean the reservoir. The figure below illustrates a typical layout of the components mounted on top of the reservoir cover. The component layout varies depending on the unit size. If you are unable to identify the components on your unit's reservoir cover, contact our Customer Service Department for assistance (see Preface, After-sale Support).

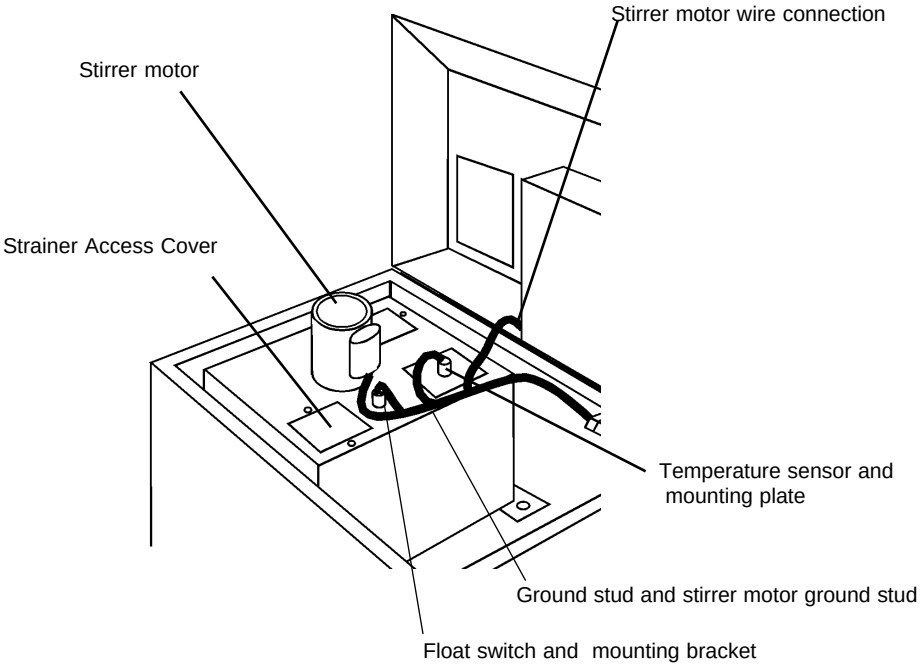

Disconnect the unit from its power source before removing the reservoir cover.

Locate the reservoir stirrer motor (units with plate heat exchangers and HX-75s do not have a stirrer motor; HX-500s and HX-750s have two stirrer motors). Disconnect the motor wires at the plug located on the side of the electrical box cover. Also disconnect the green ground wire that connects the ground stud on the reservoir cover to the unit's grounding bar.

Locate the float switch mounting bracket. Remove the two stainless steel screws that secure the bracket to the reservoir cover. Carefully remove the mounting bracket and place the assembly in an area adjacent to the reservoir. Make sure not to strain the connecting wires.

Locate the temperature sensor mounting plate. Remove the two stainless screws that secure the bracket to the reservoir. Carefully remove the sensor mounting plate with the sensor(s) attached and place the assembly in a protected area adjacent to the reservoir. Make sure not to damage the sensor(s) or strain the connecting wires.

Remove the stainless steel screws that secure the reservoir cover to the reservoir. Remove the cover and place it to one side in a manner that protects the stirrer motor blades from being bent.

Service Access Panels
Service access panels on your unit allow easy access to the pump and refrigeration assemblies. Panel location varies with the size and type of unit. The panels are designed to allow removal without disconnecting the HX from the instrument being cooled.



Disconnect the unit from its power source before removing any of the access panels.

Reservoir Cleaning

Periodic reservoir cleaning is necessary. We recommend that a visual inspection of the reservoir be made monthly after initial installation. After several months, the frequency of cleaning will be established.



Disconnect the unit from its power source and drain the reservoir before cleaning the reservoir.

Lift the top cover to access the reservoir. Remove the reservoir cover as described in Section VIII, Configuration. Clean the reservoir with a cleaning fluid compatible with the recirculating system and the cooling fluid.



Do not use steel wool or other abrasive materials. They can scratch the stainless steel surface and initiate rusting.

When the reservoir is clean, re-assemble the cover assembly and close the case top. Refer to Section III, Filling Requirements for instructions on replacing the cooling fluid.

Pump and Flow Switch Strainers

The pump and flow switch strainers require cleaning. If debris is drawn into the recirculating system, the pump strainer will prevent the material from being drawn into the pump and damaging the pump vanes and the filter strainer will prevent material from clogging the flow switch.

After initial installation, the strainers may become clogged with debris and scale. Clean the strainer after the first week of installation. After this first cleaning, a monthly visual inspection is recommended. After several months, the frequency of cleaning will be established.

Disconnect the power cord from the power source and drain the fluid reservoir before cleaning the strainer. Do not operate the unit with any strainer removed.

PD-2 and TU Pumps

The wire mesh pump strainer is located in the reservoir on the pump suction line. Remove the strainer access panel located on top of the reservoir cover to access the strainer.

Cover the strainer with a plastic bag to help catch any debris which may become free.

Unscrew the strainer and rinse it with water. Replace the strainer. Refer to Section III, Filling Requirements for instructions on replacing the cooling fluid.

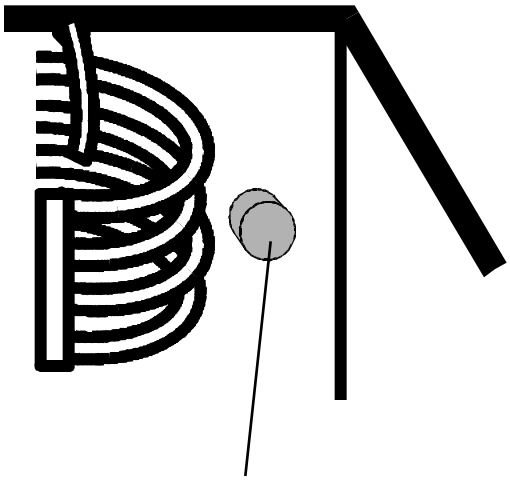

Pump Strainer

PD-1 Pumps

The wire mesh pump strainer is located on the inlet (suction) side in the pump head.

Lift the case top and remove the top right access panel to access the pump area. Unscrew the larger of the two acorn nuts on the pump head and remove the screen. Clean the screen by rinsing it with water.

When the screen is clean, replace it in the pump head and tighten the acorn nut. Replace the access panel and close the case top.

Refer to Section III, Filling Requirements for instructions on replacing the cooling fluid.

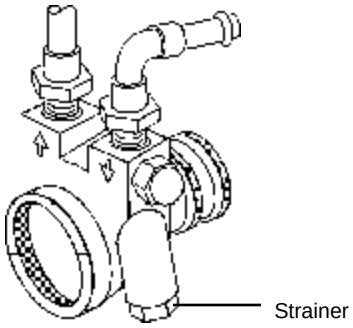

Flow Filter Strainer

The flow filter strainer is located behind the top right access panel on the inlet side of the flow switch.

Unscrew the locknut and remove the screen. Clean the screen by rinsing it with water.

Replace the strainer and locknut. Refer to Section III, Filling Requirements for instructions on replacing the cooling fluid.

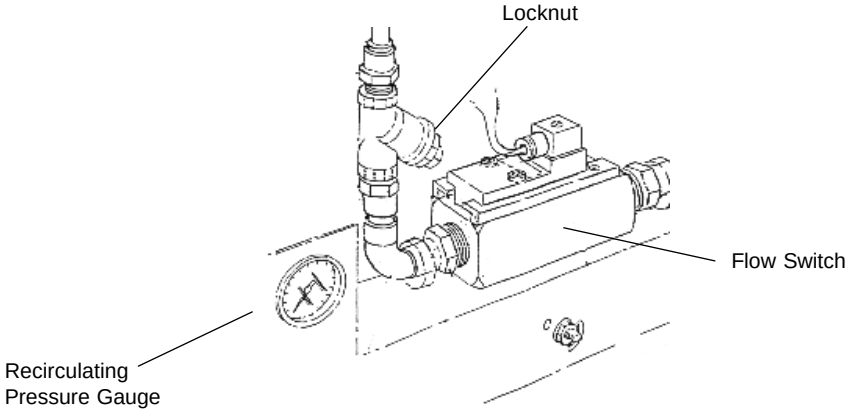

Pump Motor Lubrication

Units with PD-1 and PD-2 pumps require pump motor lubrication. Refer to the pump identification label on the rear of the case top to identify the specific pump in your unit.

Motors used to drive the pump are manufactured by several companies. These motors use sleeve type bearings with large oil reservoirs. Oiling instructions are generally posted on each motor. In the absence of instructions, add approximately 30 to 35 drops of SAE 20 non-detergent oil in each fill hole on the following schedule (SAE 20 = 142 CS viscosity):

Duty Cycle	Oiling Frequency
Continuous	Once every year
Intermittent	Once every 2 years
Occasional	Once every 5 years

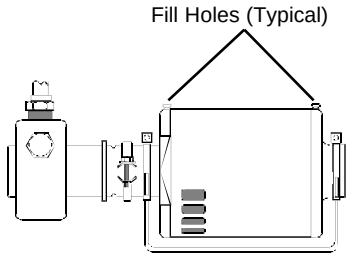

Phase Rotation

Three phase units with three phase pump motors are equipped with a phase rotation interlock. Refer to the serial number label on the rear of the case top for the specific electrical requirements of your unit. The interlock prevents the unit from starting if the phase rotation is wrong. If the unit will not start, see Section IX, Checklist. If the options in the checklist are not applicable, the problem may be phase rotation.

Disconnect the unit from its power source, remove the rear panel and the junction box cover (if so equipped). Reverse any two line conductors on the line side of the relay.

Never remove the green ground wire.

Replace the junction box and the rear panel. Reconnect the unit to its power source. If the unit will not start, contact our Customer Service Department.

Suction Discharge Pressue Speed Check (R-22)

Air-Cooled Standard and High Temperature Units (All Pump Types)[1]

Unit	Suction(psi)	Discharge(psi)	Speed Check(°C/Minute)
HX-75	77 - 84	225 - 250	1.5 - 1.7
HX-100	75 - 83	245 - 265	1.3 - 1.6
HX-150	70 - 73	240 - 270	2.0 - 2.5
HX-200	85 - 105	230 - 255	1.6 - 1.9
HX-300	84 - 105	270 - 305	2.4 - 2.7
HX-500	80 - 90	215 - 235	2.0 - 2.4
HX-750	65 - 75	185 - 215	

Water-Cooled Standard and High Temperature Units (All Pump Types)[2]

Unit	Suction(psi)	Discharge(psi)
HX-75	72	170
HX-100	86 - 92	180
HX-150	65	175
HX-200	85 - 90	180
HX-300	73 - 78	180
HX-500	75 - 82	150
HX-750	50 - 60	180

1. 27°C unit temperature, water in reservoir, access panel removed.
2. 25°C unit temperature, water in reservoir.

NOTE: Refrigerant R-22. For low temperature units please call NESLAB.

Section IX Troubleshooting

Checklist

Unit will not start

For CE Mark units, ckeck the circuit breaker setting on the rear of the bonnet.

Check power source for correct voltage output. Refer to the serial number label on the rear of the unit for the specific electrical requirements of your unit. Power source must be specified voltage, ±10%.

Check house circuit breaker.

On three phase units with three phase pump motors, the phase rotation may be reversed (see Section VIII, Phase Rotation).

On water-cooled units, ensure the facility water is on and make sure the cooling water supply is connected to the TAP WATER connection, not the DRAIN connection. Check the High Pressure Cutout, it may need to be reset (see Section V, Operation).

Unit will not circulate fluid

Check the tubing, flow switch strainer, and any optional filters/cartridges between the unit and your application for obstructions or for cleaning/ replacement.

Units with PD and TU type pumps may require pump strainer cleaning. Refer to the pump identification label on the rear of the case top to identify the specific pump in your unit. For instructions on cleaning the pump strainer, see Section VIII, Pump Strainer.

On units with CP type pumps, if the back pressure of the instrument being cooled is greater than the maximum pressure of the pump, adequate flow may not be obtained. Check for obstructions in the tubing.

Inadequate temperature control

Make sure the installation of the unit is in compliance with the conditions described in Section III.

Make sure the heat load of the instrument being cooled is not greater than the cooling capacity of the unit.

When the unit is shut off, wait approximately five minutes before restarting. This allows time for the refrigeration pressures to equalize. If the pressures are not allowed to equalize, the compressor will short-cycle (clicking sound) and no cooling will occur.

Service Assistance

If, after following these troubleshooting steps, your unit fails to operate properly, contact our Service Department for assistance (see Preface, After-sale Support). Before calling, please obtain the following information:

- BOM number
- Serial number

Section X Diagrams

Refrigeration Flow Diagram
(HX-75 through HX-150)

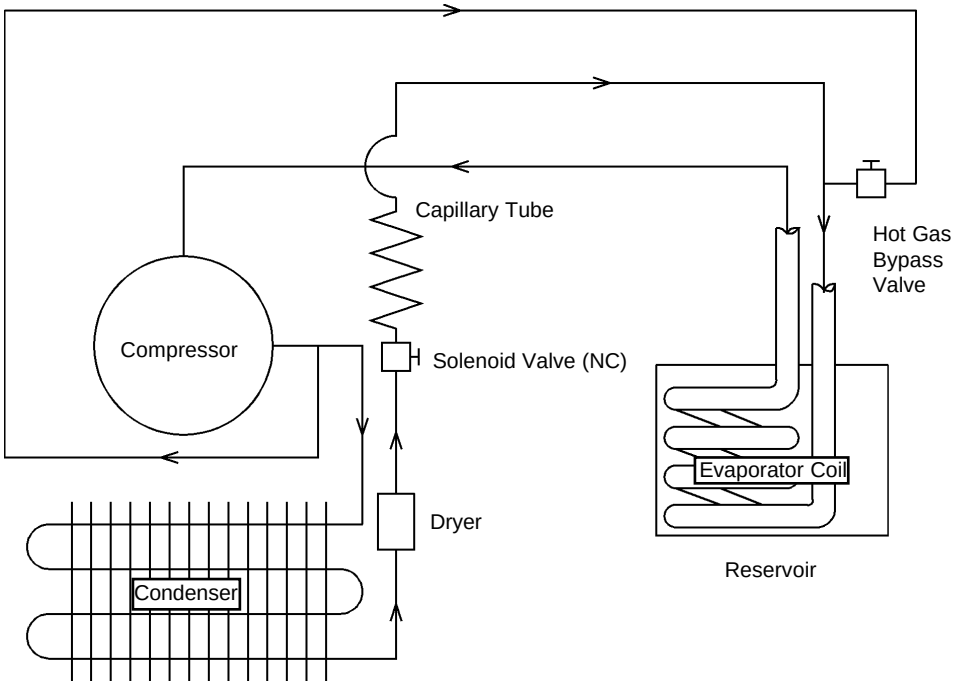

Refrigeration Flow Diagram
(HX-200 through HX-750)

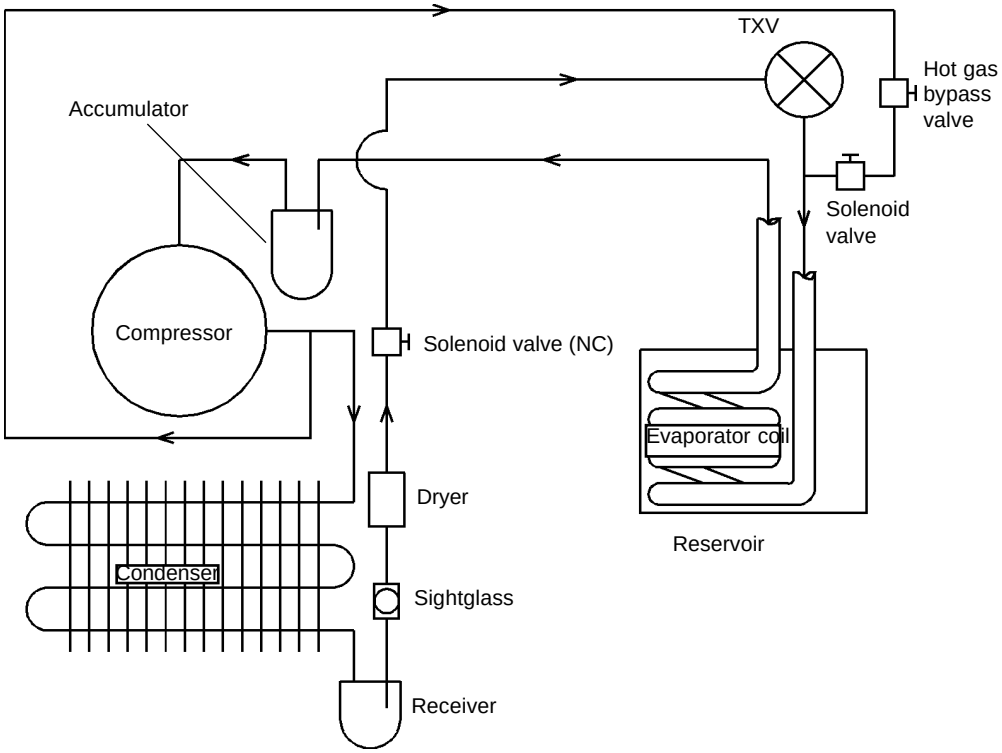

Pump Flow Diagram (CP Pumps)

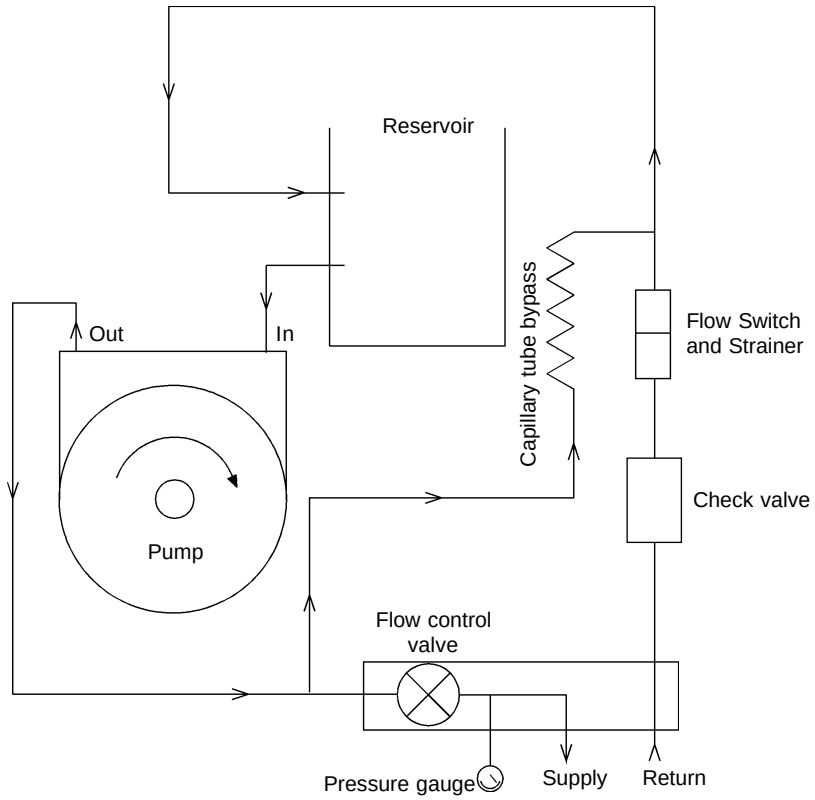

Pump Flow Diagram (PD and TU Pumps)

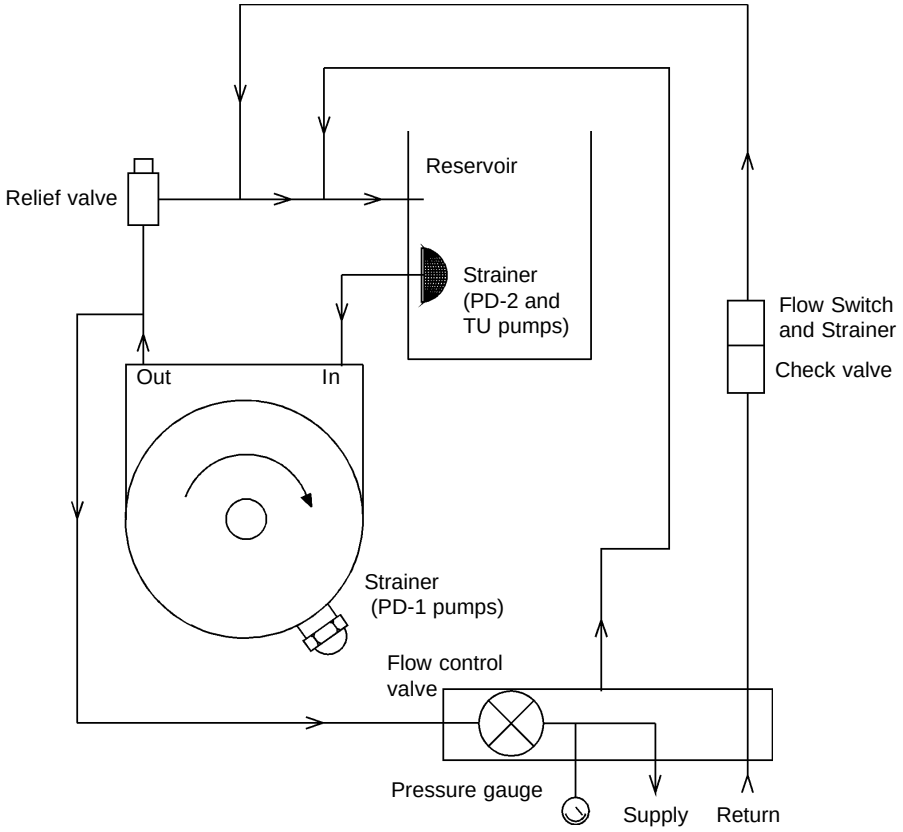

Dimensions

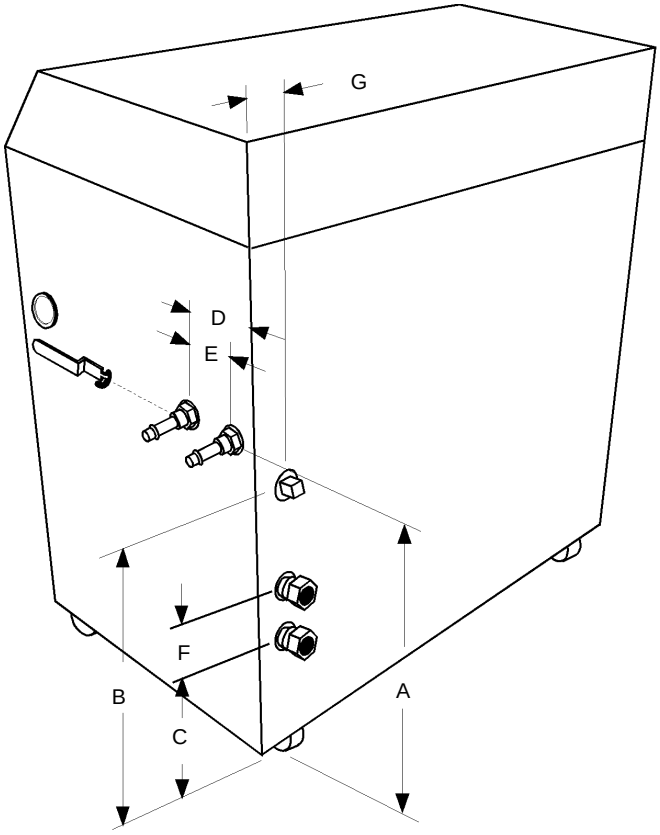

Unit Dimensions	HX75	HX100/HX150	HX200/HX300	HX500/HX900WC	HX750*/HX900AC
Dimension A	16	20	25 3/8	25¼	41
Dimension B	15¼	19¼	23½	21 1/8	33¾
Dimension C	8¼	9¼	8 3/8	5½	NA
Dimension D	7¼		7½	9½	
Dimension E	3				
Dimension F	3		3	5½	NA
Dimension G	1 3/8		1½	2¼	NA
Dimension H	2½		2 3/8	2¼	
Dimension I	25 7/8	28½	32½	36 1/8	36
Dimension J	48½	54	64 7/8	73½	86¼
Crate Dimensions (H x W x D)	46x30x27	49x33x29	55x40x33	61x54x36	74x54x36

* HX-750 air-cooled units. HX-750 water-cooled are the same size as the HX-500 units.

1. Dimensions are given in inches, ±1/8 inch.
2. Model HX-750 with a water-cooled condenser has the same dimensions as an HX-500.
4. Dimension A is the distance from the floor to the center of the SUPPLY and RETURN connections.
5. Dimension B is the distance from the floor to the center of the DRAIN connection.
6. Dimension C is the distance from the floor to the center of the tap water outlet connection.
7. Dimension D is the distance from the center of the SUPPLY connection to the rear of the unit case.
8. Dimension E is the distance between the SUPPLY and RETURN connections
9. Dimension F is the distance between the center of the TAP WATER connections (upper inlet and lower outlet).
10. Dimension G is the distance from the edge of the unit case to the center of the three plumbing connections.
11. Dimension H is the distance from the floor to the bottom of the case, height of the castors (not shown).
12. Dimension I is the depth of the unit with the case top open (not shown).
13. Dimension J is the height of the unit with the case top open (not shown).

Appendix A Standard Analog Interface J-100

Pin#	Alarm Circuitry	Control Circuitry	Definitions
1	Chassis Ground	Chassis Ground	Chassis Ground
2		Analog Ground	Electrical Ground
3	Low Level		Dry Contact
4	Warn		Dry Contact
5	System (Pump) On		Dry Contact
6		Resistivity Out	Selectable Scale 0-10VDC or 10mV/°C
7		Sensor Temperature Out	Selectable Scale 0-10VDC or 10mV/°C
8	Low Flow		Dry Contact
9	Horn (Optional)/Fault		Optional Buzzer
10	NA	NA	
11	NA	NA	
12	NA	NA	
13	NA	NA	
14	NA	NA	
15		Remote Setpoint In	Selectable Scale 0-10VDC or 10mV/°C

Low Level Fault - a dry contact in the Normally Open position, the contact closes when the controller detects a low level fault.

Low Flow Fault - a dry contact in the Normally Open position, the contact closes when the controller detects a low flow fault.

Overrange/Resistivity - a dry contact in the Normally Open position, the contact closes when the controller detects a high temperature warning or fault, low temperature warning or fault, overrrange/resistivity, system fault or high temperature cutout fault.

System On - a dry contact in the Normally Open position, the contact closes when the system is operational.

Horn (Optional) Fault - a dry contact in the Normally Open position, the optional horn sounds and/or the contact closes when the controller detects a low flow fault, level fault, overrange/resistivity, system fault or high temperature cutout fault.

Resistivity Out - scale is 0.5VDC/M-cm.

Reservoir Temperature Out - customer specified scale of either 1-10VDC or 10mV/°C.

Remote Setpoint In - customer specified scale of either 1-10VDC or 10mV/°C.

Appendix B Programming Software

NEScom Software

The NESLAB Communications Software is a user friendly software that allows you to automate your temperature control process. The software includes a 3½" disk, Comprehensive Operator's Manual and a toll-free number to a trained technical staff.

NEScom Software allows you to write custom temperature programs for our Digital or Microprocessor based temperature control apparatus. Choose upper or lower temperature limits and monitor system status with an alarm. NEScom can also record your results on a user selectable graph. NesCom must be used with an IBM or 100% compatible computer.

Select from easy to use product icons.

Create graphs and charts.

Easily configure ramping functions which set the setpoint over time.

View pop-up alarm windows which display if an alarm condition occurred.

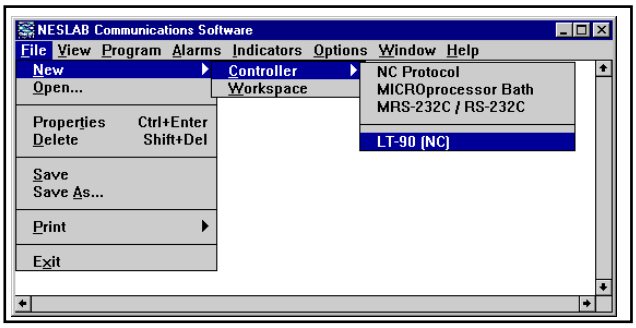

Select software functions from the easy to use pulldown menus.



View a virtual controller screen which allows remote monitoring and operation of product control panel.

DeltaTemp

DeltaTemp programming software is now available for free download from NESLAB ONLINE BBS (Bulletin Board System) at 603-427-2490.

DeltaTemp software allows you to write custom temperature programs for NESLAB digital units (any unit with a digital temperature readout AND a 10-15 pin INTERFACE port). The menu-driven program provides a table format for entering temperature parameters and a visual graph confirmation of the program you have designed. Program time can range from 0 to 999 minutes with unlimited looping. Choose upper and lower temperature limits and monitor system status with an audible alarm. DeltaTemp can also record your results on a printed graph or file. DeltaTemp is a DOS program, and requires an IBM or 100% compatible computer.

DeltaTemp may require use of a computer interface device, depending on which NESLAB unit is being used. Refer to the setup diagram in the DeltaTemp folder for full details.

To download the software, go to: CONFERENCES / SOFTWARE / DeltaTemp.

The folder also contains the operating manual, setup diagrams, application notes, and directions on making your own interface cable.

NESLAB ONLINE is a FirstClass® system accessible by general terminal software (Windows Terminal accessory, ClarisWorks Communications, Z-Term, Pro-Comm, or similar).

To use the full graphics and features of the BBS we recommend using FirstClass® Client software. FirstClass® Client is available for Macintosh or Windows platforms. It is available from many sources:

NESLAB ONLINE
Mac: Conferences/Software/Macintosh
Windows: Conferences/Software/Windows

AMERICA ONLINE
Mac: Computing/software center/mac communications forum/industry connection/softarc
Windows: Computing/software center/communications programs

COMPUSERVE:
Mac: TWEUROPA/Teletools/FCMAC.ZIP
Windows: PCBBS/BBS programs/FC300.EXE

WORLD WIDE WEB
http://www.softarc.com/try.htm

WARRANTY

NESLAB Instruments, Inc. warrants for 12 months from date of shipment any NESLAB unit according to the following terms.

Any part of the unit manufactured or supplied by NESLAB and found in the reasonable judgment of NESLAB to be defective in material or workmanship will be repaired at an authorized NESLAB Repair Depot without charge for parts or labor. The unit, including any defective part must be returned to an authorized NESLAB Repair Depot within the warranty period. The expense of returning the unit to the authorized NESLAB Repair Depot for warranty service will be paid for by the buyer. NESLAB's responsibility in respect to warranty claims is limited to performing the required repairs or replacements, and no claim of breach of warranty shall be cause for cancellation or recision of the contract of sales of any unit.

With respect to units that qualify for field service repairs, NESLAB's responsibility is limited to the component parts necessary for the repair and the labor that is required on site to perform the repair. Any travel labor or mileage charges are the financial responsibility of the buyer.

The buyer shall be responsible for any evaluation or warranty service call (including labor charges) if no defects are found with the NESLAB product.

This warranty does not cover any unit that has been subject to misuse, neglect, or accident. This warranty does not apply to any damage to the unit that is the result of improper installation or maintenance, or to any unit that has been operated or maintained in any way contrary to the operating or maintenance instructions specified in NESLAB's Instruction and Operation Manual. This warranty does not cover any unit that has been altered or modified so as to change its intended use.

In addition, this warranty does not extend to repairs made by the use of parts, accessories, or fluids which are either incompatible with the unit or adversely affect its operation, performance, or durability.

NESLAB reserves the right to change or improve the design of any unit without assuming any obligation to modify any unit previously manufactured.

THE FOREGOING EXPRESS WARRANTY IS IN LIEU OF ALL OTHER WARRANTIES, EXPRESSED OR IMPLIED, INCLUDING BUT NOT LIMITED TO WARRANTIES OR MERCHANTABILITY AND FITNESS FOR A PARTICULAR PURPOSE.

NESLAB'S OBLIGATION UNDER THIS WARRANTY IS STRICTLY AND EXCLUSIVELY LIMITED TO THE REPAIR OR REPLACEMENT OF DEFECTIVE COMPONENT PARTS AND NESLAB DOES NOT ASSUME OR AUTHORIZE ANYONE TO ASSUME FOR IT ANY OTHER OBLIGATION.

NESLAB ASSUMES NO RESPONSIBILITY FOR INCIDENTAL, CONSEQUENTIAL, OR OTHER DAMAGES INCLUDING, BUT NOT LIMITED TO LOSS OR DAMAGE TO PROPERTY, LOSS OF PROFITS OR REVENUE, LOSS OF THE UNIT, LOSS OF TIME, OR INCONVENIENCE.

This warranty applies to units sold in the United States. Any units sold elsewhere are warranted by the affiliated marketing company of NESLAB Instruments, Inc. This warranty and all matters arising pursuant to it shall be governed by the law of the State of New Hampshire, United States. All legal actions brought in relation hereto shall be filed in the appropriate state or federal courts in New Hampshire, unless waived by NESLAB.

Thermo Scientific NESLAB ThermoFlex™

Recirculating Chillers

(Basic Controller)

Thermo Scientific Manual P/N U00933 Rev. 07/24/09

Installation
Operation
Basic Maintenance

Visit our Web site at:

http://www.thermo.com/tc

Product Service Information, Applications Notes, MSDS Forms, e-mail.

Voice Info: (800) 258-0830

C US

Label 1

Label 2

Thermo Fisher Scientific

25 Nimble Hill Road
Newington, NH 03801
Tel : (800) 258-0830 or
(603) 436-9444
Fax : (603) 436-8411
www.thermo.com/tc

Sales, Service, and Customer Support

25 Nimble Hill Road
Newington, NH 03801
Tel: (800) 258-0830
Sales: 8:00 am to 5:00 pm
Service and Support: 8:00 am to 6:00 pm
Monday through Friday (Eastern Time)
Fax: (603) 436-8411
service.tc.us@thermofisher.com

Dieselstrasse 4
D-76227 Karlsruhe, Germany
Tel : +49 (0) 721 4094 444
Fax : +49 (0) 721 4094 300
info.tc.de@thermofisher.com

Building 6, No. 27
Xin Jinqiao Rd., Shanghai 201206
Tel : +86(21) 68654588
Fax : +86(21) 64457830
info.china@thermofisher.com

Ion Path, Road Three,
Winsford, Cheshire, CW73GA, United Kingdom
Phone: +44 (0)8706 099254
Fax: +44 (0)1606 548103

Statement of Copyright
Copyright © 2009 Thermo Fisher Scientific. All rights reserved.
This manual is copyrighted by Thermo Fisher Scientific.
Users are forbidden to reproduce, republish, redistribute, or resell any materials from this manual in either machine-readable form or any other form.

Contents

Preface ..... **i**
Compliance i
WEEE i
After-Sale Support ii
Unpacking ii
Warranty ii
Feedback ii

Section 1 **Safety 1-1**
Warnings 1-1

Section 2 **General Information 2-1**
Description 2-1
Specifications 2-1

Section 3 **Installation 3-1**
Site Requirements 3-1
Electrical Requirements 3-2
Hard Wire Installation 3-5
Plumbing Requirements 3-6
Process Fluid Requirements 3-8
Compatibility with Acceptable Fluids 3-9
Water Quality - Standards and Recommendations 3-10
Water Treatment Kit (North America Only) 3-11
Facility Water Requirements (water-cooled units) 3-11
Filling Requirements 3-14

Section 4 **Operation 4-1**
Basic Controller 4-1
Setup 4-2
Start Up 4-2
Controller Loops 4-4
Setpoint Loop 4-5
Setup Loop 4-6
Shut Down 4-12

Section 5 Additional Options/Accessories 5-1
Auto Refill 5-1
Internal DI Cartridge 5-2
P1 P2 T1 Pump Pressure Relief Valve (Internal Configuration) 5-3
P1 P2 T1 Pump Pressure Relief Valve (External Configuration) 5-4
Flow Control with Flow Readout 5-5
P1 P2 T1 Pump Pressure Relief with Flow Readout 5-5
Anti Drainback 5-6
SEMI 5-6
Other Accessories 5-10

Section 6 Preventive Maintenance 6-1
Preventive Maintenance Timer 6-1
Fluid Bag Filter 6-2
Fluid Diffuser 6-2
Reservoir Cleaning 6-3
Condenser Filter 6-4
DI Filter (Optional) 6-6
Diagnostic Loop 6-7
Service Codes 6-8

Section 7 Troubleshooting 7-1
Operational Error Codes 7-1
Checklist 7-10
Verifying/Adjusting the Controller PID Values 7-12

Section 8 Additional Information 8-1
Draining 8-1
Wetted Materials 8-3
Internal Process Fluid Temperature Sensor (rdt1) Calibration 8-4
Process Fluid Pressure (P1) Transducer Calibration 8-6
Optional Process Fluid Flow (FLo) Transducer Calibration 8-8
Shipment/Storage 8-10

Appendix A
Country Specific 230 VAC, 50 Hz, 1 Ø Requirements

Appendix B
Voltage Configuration Instructions

Appendix C
Analog I/0 and Remote Sensor

Appendix D
Serial Communications

WARRANTY

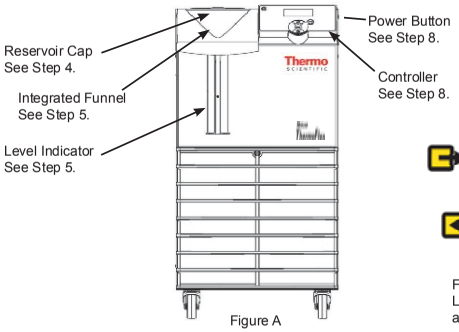

Figure A

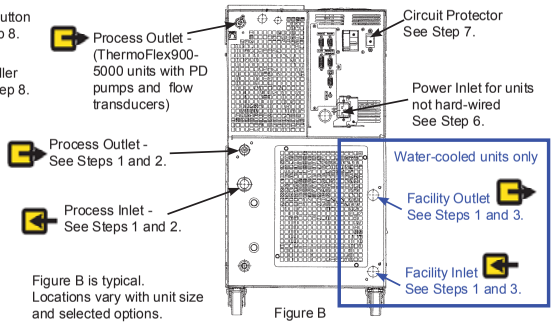

Figure B is typical. Locations vary with unit size and selected options.

Figure B

What you need to get started:

- An adjustable wrench
- Facility water supply and return (water-cooled units)
- Appropriate hose or plumbing
- Appropriate size clamps or connection type
- Teflon® Tape or appropriate sealant

Process Fluid Connections (FNPT)

Outlet		
ThermoFlex900 - 10000	P1 P2 T1	1/2" cast bronze
ThermoFlex3500 - 5000	P3 P4	3/4" cast bronze
ThermoFlex7500 - 10000	P3 P5	1" wrought copper
Inlet - Same size as outlet		all units stainless steel

Facility Water Connections (FNPT)

Inlet/Outlet	
ThermoFlex1400 - 5000	½" cast bronze
ThermoFlex7500 - 10000	¾" cast bronze

1 Pull out the plastic shipping plugs.

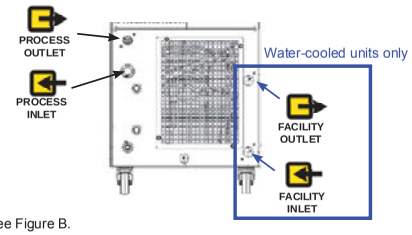

See Figure B.

2 Connect the ThermoFlex PROCESS OUTLET (A) to the fluid inlet on your application. Connect the ThermoFlex PROCESS INLET (B) to the fluid outlet on your application. Ensure the connections are sealed and secure. **For air-cooled units skip to Step 4.**



See Figure B.

3 Connect the ThermoFlex FACILITY OUTLET (A) to your facility water return or drain. Connect the ThermoFlex FACILITY INLET (B) to your facility water supply. Ensure the connections are sealed and secure.

For water-cooled units only.

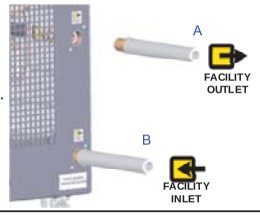

See Figure B.

4 Remove the reservoir cap by unscrewing it counter-clockwise.



See Figure A.

5 *Slowly* fill reservoir with clean process fluid (see Table 1), utilizing sight tube for easy fluid level monitoring. When the reservoir is full replace the reservoir cap, hand tight. Since the reservoir capacity may be small compared to your application and air may need to be purged from the lines, have extra cooling fluid on hand to keep the system topped off when external circulation is started.

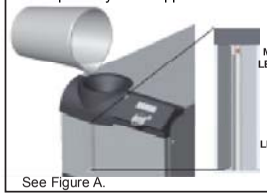

Note: Be careful not to fill the reservoir above MAX LEVEL fill line. This will result in a unit over flow error (O FLO) which will cause the unit to shut down.

See Figure A.

6 Verify the appropriate voltage. For units supplied with a line cord, insert female end of power cord into chiller and then insert male end of power cord into power outlet. (The line cord is located under the shipping crate's lid. Do not discard the lid until the cord is located.)



Note: ThermoFlex900-5000 units equipped with the Variable Voltage or Global Voltage option have a voltage configuration panel located behind an access panel on the rear of the unit. Refer to the Voltage Instruction Sheet shipped with the unit, or see manual Appendix B.

Note: For units requiring hard wiring see Section 3 in the manual.

See Figure B.

7 Place the circuit protector to the on (I) position. The controller display will indicate a series of scrolling bars ( ). The bars will scroll upward indicating the unit is initializing, this takes approximately 15 seconds.

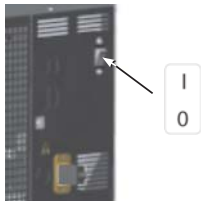

See Figure B.

8 Press .

The controller will display **SEtuP**.

Note: If the unit is equipped with a deionization filter cartridge refer to the manual, Section 5, for installation.

Please see reverse side for additional steps.



See Figure A.

Safety Precautions:

The unit is designed for indoor use only.

Never place unit in a location where excessive heat, moisture, inadequate ventilation, or corrosive materials are present.

Never use flammable or corrosive fluids with this unit.

Never connect process fluid lines to your facility water supply or to any pressurized liquid source.

If your unit is equipped with a positive displacement pump (P1 or P2), ensure your application plumbing lines and fittings are rated to withstand a minimum of 185 psi.

Before using any fluid or performing maintenance where contact with the fluid is likely refer to the manufacturer's MSDS for handling precautions.

Table 1 - Acceptable Fluids:

Use of any fluid not listed below will void the manufacturer's warranty.

- Filtered/Single Distilled Water
- Deionized water (1-3 MΩ-cm, compensated)
- 0 – 75% Ethylene Glycol/Water
- 0 – 75% Propylene Glycol/Water

Quick Start - Used for Initial Start Up Only — perform steps 9 to 20 for all units.

NOTE: Some ranges/defaults are pump dependent, see Section 4 in the manual. Once any Setup step is completed, meaning you pressed the enter key a second time, you can not repeat the step to make corrections. You *can* make changes after the unit is started.

SEtuP — Press enter to continue the setup procedure.

9 Un itS — **UnitS are the temperature, fluid flow (optional) and pressure scales.**

Scales: °C/°F GPM/LPM PSI/Bar/KPAS

- Press enter
- The display will flash between **UnitS** and **°C**
- If desired, use ▲ to change the scale to °F
- Press enter to sequence to the next display
- Do the same for **Flow** and Pressure scales

10 Hi t — **Hi t sets the fluid's High Temperature Alarm Limit.**

Range: +3°C to +42°C
Factory Default: +42°C

- Press enter
- The display will flash between **Hi t** and **42**
- If desired, use ▲▼ to adjust the value
- Press enter to sequence to the next display

11 Lo t — **Lo t sets the fluid's Low Temperature Alarm Limit.**

Range: +3°C to +42°C
Factory Default: 3°C

- Press enter
- The display will flash between **Lo t** and **3**
- If desired, use ▲▼ to adjust the value
- Press enter

12 Hi P1 — **Hi P1 sets the Pump's High Pressure Discharge Alarm Limit.**

Range: Varies by pump
Factory Default: Varies by pump

- Press enter
- The display will flash between **Hi P1** and the default
- If desired, use ▲▼ to adjust the value
- Press enter

13 dELAY — **dELAY is the length of time the pump can exceed the Hi P1 Alarm Limit before shutting down.**

Range: Varies by pump
Factory Default: 0 seconds

- The display will flash between **dELAY** and **0**
- If desired, use ▲▼ to adjust the value
- Press enter

NOTE This feature is active only if the unit is configured to shut down, see Step 16.

14 Lo P1 — **Lo P1 sets the Pump's Low Pressure Discharge Alarm Limit.**

Range: Varies by pump
Factory Default: Varies by pump

- Press enter
- The display will flash between **Lo P1** and the default
- If desired, use ▲▼ to adjust the default
- Press enter

15 dELAY — **dELAY is the length of time the pump can exceed the Lo P1 Alarm Limit before shutting down.**

Range: 0 to 30 seconds
Factory Default: 10 seconds

- The display will flash between **dELAY** and **10**
- If desired, use ▲▼ to adjust the value
- Press enter

NOTE This feature is active only if the unit is configured to shut down, see Step 16.

16 ALr — **ALr configures the unit's reaction to temperature, pressure, and flow (optional) alarm limits - either shut down (fLt) or continue to run (indC). See Section 4 in the manual for more information.**

Range: fLt* or indC**
Factory Default: fLt

- Press enter
- The display will flash between **ALr** and **fLt**
- If desired, press ▼ to display **indC**
- Press enter

*fLt = fault (shut down)
**indC = indicate (continue to run)

17 Sound — **Turns the unit's audible alarm on or off.**

Range: on or OFF
Factory Default: on

- Press enter
- The display will flash between **Sound** and **on**
- If desired, press ▼ to display **OFF**
- Press enter

18 StArt — **StArt enables/disables auto restart.**

Range: on or OFF
Factory Default: OFF

- Press enter
- The display will flash between **StArt** and **OFF**
- If desired, press ▲ to display **on**
- Press enter

19 CArE — **CArE is used to set the preventative care cleaning frequency reminder for the unit's air and fluid filters.**

Range: off, L1 - 1000 hours, L2 - 2000 hours, L3 -3000 hours
Factory Default: L1

- Press enter
- The display will flash between **CArE** and **L1**
- If desired, use ▲▼ to change display to off, L2 or L3
- Press enter

If applicable, see boxes on right to set up options. For units with Analog I/O (ACOM) refer to the additional quick start supplied with your unit.

20 StorE

- Press ▲ to save *all* settings

The unit will automatically start.

- Press ▼ to disregard *all* changes and restore the factory default values.

The display will go blank.

The Setup procedure is now complete.

When the unit starts the controller will display the process fluid temperature.

If desired, you can change/verify the unit's setpoint by pressing mode.

SP — **SP is used to adjust the setpoint.**

Range: +5°C to +40°C
Factory Default: +20°C

- The display will flash between **SP** and **20**
- If desired, use ▲▼ to change the setting
- Press enter to save the new setpoint and return to the temperature display

Option - Voltage — Step A

A HZ

HZ is used to identify the incoming frequency for units with P3 - P5 pumps *and* variable voltage capability. The selected frequency automatically adjusts the firmware's *fixed* high pressure default setting.

- Press enter
- The display will flash between **HZ** and **60**
- If needed, use ▲ to change the frequency
- Press enter

If your unit does not have a flow transducer or serial communications see Step 20.

Option - Flow Transducer — Steps B and C

B HiFLo — **HiFLO sets the high flow alarm limit.**

Range: Varies by pump
Factory Default: Varies by pump

- Press enter
- The display will flash between **HiFLO** and the default
- If desired, use ▲▼ to adjust the value
- Press enter

C LoFLo — **LoFLO sets the low flow alarm limit.**

Range: Varies by pump
Factory Default: Varies by pump

- Press enter
- The display will flash between **LoFLO** and the default
- If desired, use ▲▼ to adjust the value
- Press enter

If your unit does not have serial communications see Step 20.

Option - Serial Communications (DCOM) — Steps D to I

D SEr — **SEr is used to enable/disable and to configure serial communications mode.**

Range: off, rS232, rS485
Factory Default: off

- Press enter
- The display will flash between **SEr** and **OFF**
- If desired, use ▲▼ to change the mode
- Press enter

E BAud — **BAud is used to select the baud rate (speed) for serial communication.**

Range: 9600, 4800, 2400, 1200, 600, or 300 bits per second.

- Press enter
- The display will flash between **BAud** and **9600**
- If desired, use ▲▼ to change the rate
- Press enter

F dAtA — **dAtA is used to display the number of bits.**

Display: 8

- Press enter
- The display will flash between **dAtA** and **8**
- Press enter

G StoP — **StoP is used to indicate the number of stop bits.**

Range: 2 or 1
Factory Default: 1

- Press enter
- The display will flash between **StoP** and **1**
- If desired, use ▲▼ to change the setting
- Press enter

H PAr — **PAr is used as a means to check for communication errors.**

Range: even, odd, or none
Factory Default: none

- Press enter
- The display will flash between **PAr** and **none**
- If desired, use ▲▼ to change the setting
- Press enter

I u id — **u id (unit id) is used in RS485 only. Identifies devices connected to the RS485 port.**

Range: 1 to 99
Factory Default: 1

- Press enter
- The display will flash between **u id** and **1**
- If desired, use ▲▼ to change the setting
- Press enter

See Step 20.

Preface

Compliance

CSA Approved - Laboratory equipment-electrical

File # 105974_C_000

CLASS: 8721-05 CAN/CSA-C22.2 No. 61010-1-04

CLASS: 8721-05 ANSI/UL Standard 61010-1

Products tested and found compliant with the requirements defined in the EMC standards defined by 89/336/EEC as well as Low Voltage Directive (LVD) 73/2 can be identified by the CE Mark on the rear of the unit. The testing has demonstrated compliance with the following directives:

- LVD, 73/23/EEC IEC/EN 61010-1
- EMC, 89/336/EEC IEC/EN 61326-1

For any additional information, refer to the Declaration of Conformity that shipped with the unit.

NOTE ThermoFlex7500 and ThermoFlex10000 compliance is pending. ▲

WEEE

This product is required to comply with the European Union's Waste Electrical & Electronic Equipment (WEEE) Directive 2002/96/EC. It is marked with the following symbol:



Thermo Fisher Scientific has contracted with one or more recycling/ disposal companies in each EU Member State, dispose of or recycle this product through them. Further information on Thermo Fisher Scientific's compliance with these Directives is available at:

www.thermo.com/WEEERoHS

After-sale Support

Thermo Fisher Scientific is committed to customer service both during and after the sale. If you have questions concerning the unit operation, or questions concerning spare parts or Service Contracts, call our Sales, Service and Customer Support phone number, see inside cover for contact information.

When calling, please refer to the labels on the inside cover. These labels list all the necessary information needed to properly identify your unit.

Feedback

We appreciate any feedback you can give us on this manual. Please e-mail us at thermoscientificmanuals@thermofisher.com. Be sure to include the manual part number and the revision date listed on the front cover.

Warranty

Thermo Scientific NESLAB ThermoFlex units have a warranty against defective parts and workmanship for 24 months from date of shipment. See back page for more details.

Unpacking

Retain all cartons and packing material until the unit is operated and found to be in good condition. If the unit shows external or internal damage contact the transportation company and file a damage claim. Under ICC regulations, this is your responsibility.

Out of Box Failure
An Out of Box Failure is defined as any product that fails to operate in conformance with sellers published specifications at initial power up. Install the unit in accordance with manufacturer's recommended operating conditions within 30 days of shipment from the seller.

Any Temperature Control product meeting the definition of an Out of Box Failure must be packed and shipped back in the original packaging to Thermo Fisher Scientific for replacement with a new unit; seller to pay the cost of shipping. Customer must receive a Return Material Authorization (RMA) from Thermo Fisher prior to shipping the unit.

Section 1 Safety

Safety Warnings



Warnings are posted throughout the manual. These warnings are designated by an exclamation mark inside an equilateral triangle and text highlighted in bold. Read and follow these important instructions. Failure to observe these instructions can result in permanent damage to the unit, significant property damage, or personal injury or death.



The lightning flash with arrow symbol, within an equilateral triangle, is intended to alert the user to the presence of non-insulated "dangerous voltage" within the unit's enclosure. The voltage magnitude is significant enough to constitute a risk of electrical shock.

Make sure you read and understand all instructions and safety precautions listed in this manual before installing or operating your unit. If you have any questions concerning the operation of your unit or the information in this manual, please contact us. See inside cover for contact information.

Never place the unit in a location where excessive heat, moisture, or corrosive materials are present. ▲

The unit construction provides protection against the risk of electrical shock by grounding appropriate metal parts. The protection may not function unless the power cord is connected to a properly grounded outlet. It is the user's responsibility to assure a proper ground connection is provided. ▲

Always turn the unit off and disconnect the supply voltage from its power source before moving the unit. ▲

Never connect the process fluid inlet or outlet fittings to your building water supply or any water pressure source. ▲

Never use flammable or corrosive fluids with this unit. Use of these fluids will void the manufacturer's warranty. ▲

Do not use automotive antifreeze. Commercial antifreeze contains silicates that can damage the pump seals. Use of automotive antifreeze will void the manufacturer's warranty. ▲

To prevent freezing/glazing of the plate exchanger, ThermoFlex7500 and ThermoFlex10000 units require the use of 50/50 EG/water or 50/50 PG/water below 10°C process temperature. ▲

Before using any fluid or performing maintenance where contact with the fluid is likely refer to the manufacturer's MSDS for handling precautions. ▲

When using a process fluid mixture of ethylene glycol and water or propylene glycol and water, check the fluid concentration and pH on a regular basis. Changes in concentration and pH can impact system performance. See Section 3. ▲

Performance of installation, operation, or maintenance procedures other than those described in this manual may result in a hazardous situation and may void the manufacturer's warranty. ▲

Transport the unit with care. Sudden jolts or drops can damage the unit's components. ▲

Drain the unit before it is transported and/or stored in near or below freezing temperatures, see Draining in Section 8. Store the unit in the temperature range -25°C to 60°C (with packaging), and <80% relative humidity. ▲

The circuit protector located on the rear of the unit is not intended to act as a disconnecting means. ▲

Observe all warning labels. ▲

Never remove warning labels. ▲

Never operate damaged or leaking equipment. ▲

Never operate the unit without process fluid in the reservoir. ▲

Always turn off the unit and disconnect the power cord from the power source before performing any service or maintenance procedures, or before moving the unit. ▲

Never operate the unit with panels removed. ▲

Never operate equipment with damaged power cords. ▲

Refer service and repairs to a qualified technician. ▲

Section 2 General Information

Description

The Thermo Scientific NESLAB ThermoFlex™ recirculating chiller is designed to provide a continuous supply of fluid at a constant temperature and volume. The unit consists of an air-cooled or water-cooled refrigeration system, heat exchanger, recirculating pump, polyethylene reservoir, and a microprocessor controller.

Specifications

	ThermoFlex900	ThermoFlex1400	ThermoFlex2500
Process Fluid Temperature and Setpoint Range	+5°C to +40°C +41°F to +104°F	+5°C to +40°C +41°F to +104°F	+5°C to +40°C +41°F to +104°F
Ambient Temperature Range	+10°C to +40°C +50°F to +104°F	+10°C to +40°C +50°F to +104°F	+10°C to +40°C +50°F to +104°F
Temperature Stability	±0.1°C	±0.1°C	±0.1°C
Cooling Capacity at 20°C 60 Hz 50 Hz	900 W (3074 BTU) 750 W (2561 BTU)	1400 W (4781 BTU) 1170 W (3996 BTU)	2500 W (8538 BTU)* 2200 W (7513 BTU)
	*To meet this specification, the ThermoFlex2500 air-cooled units require the fan to be operating in the high-speed mode, see Section 3.		
Refrigerant	R134A	R134A	R134A
Reservoir Volume Gallons Liters	1.9 7.2	1.9 7.2	1.9 7.2
Footprint or Dimensions (H x W x D)			
Inches Centimeters	27.3 x 14.2 x 24.6 69.2 x 36.0 x 62.4	27.3 x 14.2 x 24.6 69.2 x 36.0 x 62.4	29.0 x 17.2 x 26.5 73.6 x 43.6 x 67.3
Unit Weight (empty) lb kg	130.5 59.2	130.5 59.2	175.5 79.6
Pumping Capacity			
P1 - Positive Displacement 60 Hz 50 Hz	2.1 gpm @ 60 psig (7.9 lpm @ 4.1 bar) 1.7 gpm @ 60 psig (6.4 lpm @ 4.1 bar)		
P2 - Positive Displacement 60 Hz 50 Hz	4.0 gpm @ 60 psig (15.1 lpm @ 4.1 bar) 3.3 gpm @ 60 psig (12.5 lpm @ 4.1 bar)		
T1 - Turbine 60 Hz* 50 Hz*	3.5 gpm @ 60 psig (13.3 lpm @ 4.1 bar) 2.5 gpm @ 60 psig (9.5 lpm @ 4.1 bar)		
* Pumping capacity pressure values for turbine pumps are differential pressures between the inlet and the outlet of the unit.			

- Cooling capacity based on P2 pumps with no backpressure. Heat input from the pump will result in a reduction in cooling capacity. The cooling capacity reduction will vary based on the pump chosen as well as pump backpressure and flow.
- Specifications obtained at sea level using water as the recirculating fluid, at a 20°C process setpoint, 25°C ambient condition, at nominal operating voltage. Other fluids, fluid temperatures, ambient temperatures, altitude or operating voltages will affect performance. See Section 3.
- Additional dimensions are at the end of this section, add 1/8" (3 mm) to height for SEMI units.
- Add 5 pounds (2 kilograms) for global voltage units.
- Thermo Fisher Scientific reserves the right to change specifications without notice.

Specifications

	ThermoFlex3500	ThermoFlex5000
Process FluidTemperature and Setpoint Range	+5°C to +40°C +41°F to +104°F	+5°C to +40°C +41°F to +104°F
Ambient Temperature Range	+10°C to +40°C +50°F to +104°F	+10°C to +40°C +50°F to +104°F
Temperature Stability	± 0.1°C	± 0.1°C
Cooling Capacity at 20°C 60 Hz 50 Hz	3500 W (11953 BTU) 3050 W (10416 BTU)	5000 W (17076 BTU) 4400 W (15027 BTU)
Refrigerant	R407C	R407C
Reservoir Volume Gallons Liters	1.9 7.2	1.9 7.2
Footprint or Dimensions (H x W x D)		
Inches Centimeters	38.9 x 19.3 x 30.9 98.7 x 48.8 x 78.4	38.9 x 19.3 x 30.9 98.7 x 48.8 x 78.4
Unit Weight P1/ P2/P3/P4 (empty) lb kg	264/264/270/303 120/120/123/138	NA/264/270/303 NA/120/123/138
Pumping Capacity		
P1 - Positive Displacement 60 Hz 50 Hz	2.1 gpm @ 60 psig (7.9 lpm @ 4.1 bar) 1.7 gpm @ 60 psig (6.4 lpm @ 4.1 bar)	Not Available Not Available
P2 - Positive Displacement 60 Hz 50 Hz	4.0 gpm @ 60 psig (15.1 lpm @ 4.1 bar) 3.3 gpm @ 60 psig (12.5 lpm @ 4.1 bar)	4.0 gpm @ 60 psig (15.1 lpm @ 4.1 bar) 3.3 gpm @ 60 psig (12.5 lpm @ 4.1 bar)
T1 - Turbine 60 Hz* 50 Hz*	3.5 gpm @ 60 psig (13.3 lpm @ 4.1 bar) 2.5 gpm @ 60 psig (9.5 lpm @ 4.1 bar)	3.5 gpm @ 60 psig (13.3 lpm @ 4.1 bar) 2.5 gpm @ 60 psig (9.5 lpm @ 4.1 bar)
P3 - Centrifugal Pump 60 Hz* 50 Hz*	10 gpm @ 32 psid (37.9 lpm @ 2.2 bar) 10 gpm @ 20 psid (37.9 lpm @ 1.4 bar)	10 gpm @ 32 psid (37.9 lpm @ 2.2 bar) 10 gpm @ 20 psid (37.9 lpm @ 1.4 bar)
P4 - Centrifugal Pump 60 Hz* 50 Hz*	15 gpm @ 57 psid (56.8 lpm @ 3.9 bar) 15 gpm @ 34 psid (56.8 lpm @ 2.3 bar)	15 gpm @ 57 psid (56.8 lpm @ 3.9 bar) 15 gpm @ 34 psid (56.8 lpm @ 2.3 bar)

* Pumping capacity pressure values for turbine and centrifugal pumps are differential pressures between the inlet and the outlet of the unit.

- Cooling capacity based on P2 pumps with no backpressure. Heat input from the pump will result in a reduction in cooling capacity. The cooling capacity reduction will vary based on the pump chosen as well as pump backpressure and flow.
- Specifications obtained at sea level using water as the recirculating fluid, at a 20°C process setpoint, 25°C ambient condition, at nominal operating voltage. Other fluids, fluid temperatures, ambient temperatures, altitude or operating voltages will affect performance. See Section 3.
- Additional dimensions are at the end of this section, add 1/8" (3 cm) to height for SEMI units.
- Add 30 pounds (14 kilograms) for global voltage units.
- Thermo Fisher Scientific reserves the right to change specifications without notice.

Specifications

	ThermoFlex7500	ThermoFlex10000
Process Fluid Temperature and Setpoint Range	+5°C to +40°C +41°F to +104°F	+5°C to +40°C +41°F to +104°F
Ambient Temperature Range	+10°C to +40°C +50°F to +104°F	+10°C to +40°C +50°F to +104°F
Temperature Stability	±0.1°C	±0.1°C
Cooling Capacity at 20°C 60 Hz 50 Hz	7500 W (25575 BTU) 6425 W (21910 BTU)	10000 W (34100 BTU) 8500 W (28985 BTU)
Refrigerant	R407C	R407C
Reservoir Volume Gallons Liters	4.75 17.9	4.75 17.9
Footprint or Dimensions (H x W x D)		
Air-Cooled Inches Centimeters	52.3 x 25.2 x 33.8 132.7 x 63.9 x 85.6	52.3 x 25.2 x 33.8 132.7 x 63.9 x 85.6
Water-Cooled Inches Centimeters	45.9 x 25.2 x 33.8 116.6 x 63.9 x 85.6	45.9 x 25.2 x 33.8 116.6 x 63.9 x 85.6
Unit Weight P2/P3/P5 (empty)		
Air-Cooled lb kg	356/372.5/405.5 161.5/169/184	356/372.5/405.5 161.5/169/184
Water-Cooled lb kg	315/331.5/364.5 143/150/165	315/331.5/364.5 143/150/165
Pumping Capacity		
P2 - Positive Displacement 60 Hz 50 Hz	4.0 gpm @ 60 psig (15.1 lpm @ 4.1 bar) 3.3 gpm @ 60 psig (12.5 lpm @ 4.1 bar)	4.0 gpm @ 60 psig (15.1 lpm @ 4.1 bar) 3.3 gpm @ 60 psig (12.5 lpm @ 4.1 bar)
P3 - Centrifugal Pump 60 Hz* 50 Hz*	10 gpm @ 32 psid (37.9 lpm @ 2.2 bar) 10 gpm @ 20 psid (37.9 lpm @ 1.4 bar)	10 gpm @ 32 psid (37.9 lpm @ 2.2 bar) 10 gpm @ 20 psid (37.9 lpm @ 1.4 bar)
P5 - Centrifugal Pump 60 Hz* 50 Hz*	20 gpm @ 60 psid (75.7 lpm @ 4.1 bar) 20 gpm @ 35 psid (75.7 lpm @ 2.4 bar)	20 gpm @ 60 psid (75.7 lpm @ 4.1 bar) 20 gpm @ 35 psid (75.7 lpm @ 2.4 bar)

* Pumping capacity pressure values for centrifugal pumps are differential pressures between the inlet and the outlet of the unit.

- Cooling capacity based on P2 pumps with no backpressure. Heat input from the pump will result in a reduction in cooling capacity. The cooling capacity reduction will vary based on the pump chosen as well as pump backpressure and flow.
- Specifications obtained at sea level using water as the recirculating fluid, at a 20°C process setpoint, 25°C ambient condition, at nominal operating voltage. Other fluids, fluid temperatures, ambient temperatures, altitude or operating voltages will affect performance. See Section 3.
- Additional dimensions are at the end of this section.
- Add 30 pounds (14 kilograms) for global voltage units with a P2 pump. Add 10 pounds (4.5 kilograms) for units with a P3 or P5 pump.
- Thermo Fisher Scientific reserves the right to change specifications without notice.

Cooling Capacity

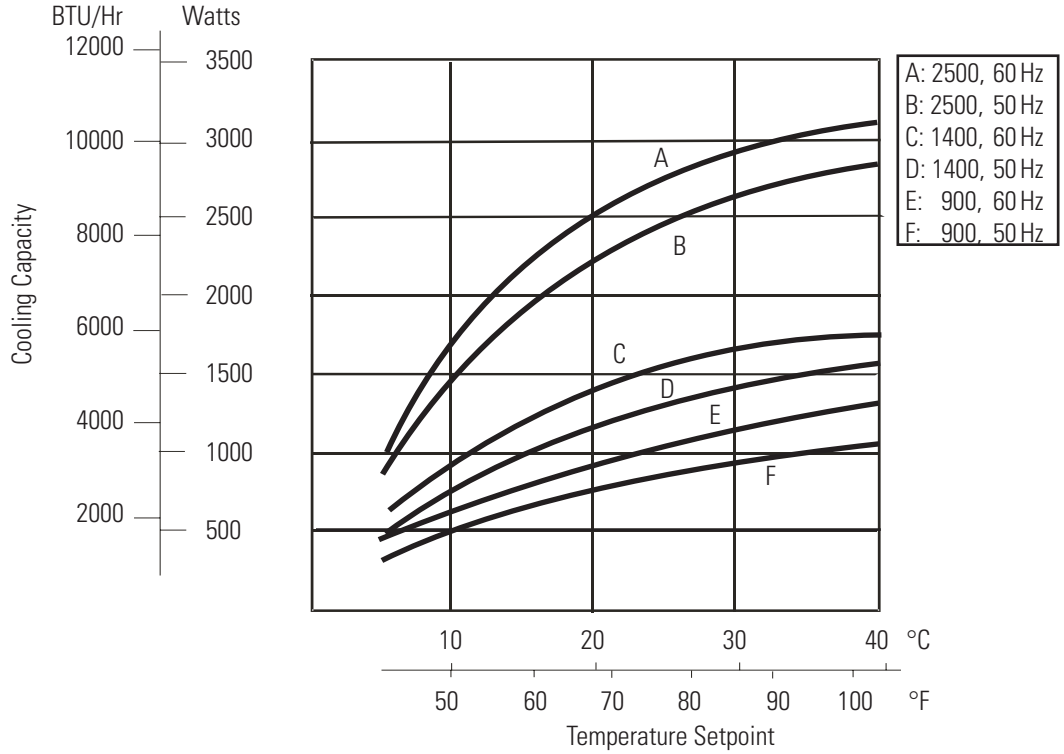

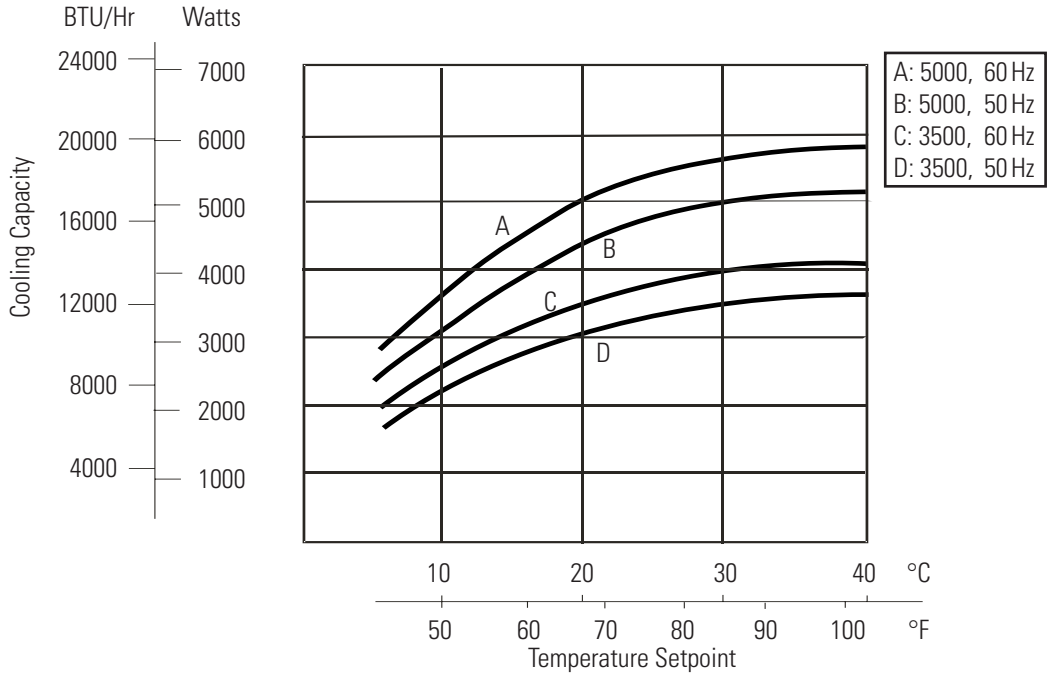

- Specifications obtained at sea level using water as the recirculating fluid, at a 20°C process setpoint, 25°C ambient condition, at nominal operating voltage, on units with P2 pumps with no back pressure. Other fluids, fluid temperatures, ambient temperatures, altitude, operating voltages or pumps will affect performance. See Section 3.
- Thermo Fisher Scientific reserves the right to change specifications without notice.

Cooling Capacity

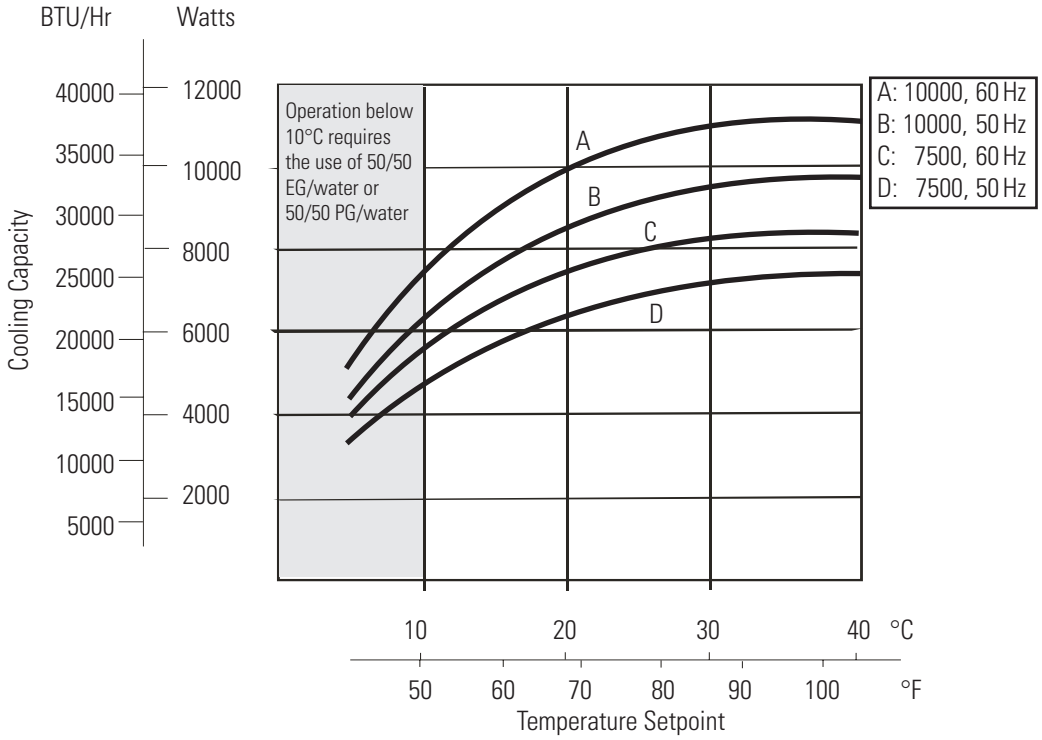

- Specifications obtained at sea level using water as the recirculating fluid, at a 20°C process setpoint, 25°C ambient condition, at nominal operating voltage, on units with P2 pumps with no back pressure. Other fluids, fluid temperatures, ambient temperatures, altitude, operating voltages or pumps will affect performance. See Section 3.
- Units require the use of 50/50 EG/water or 50/50 PG/water below 10°C process temperature to prevent freezing/glazing of the plate exchanger.
- Thermo Fisher Scientific reserves the right to change specifications without notice.

Pumping Capacity
Positive Displacement Pump P1/P2

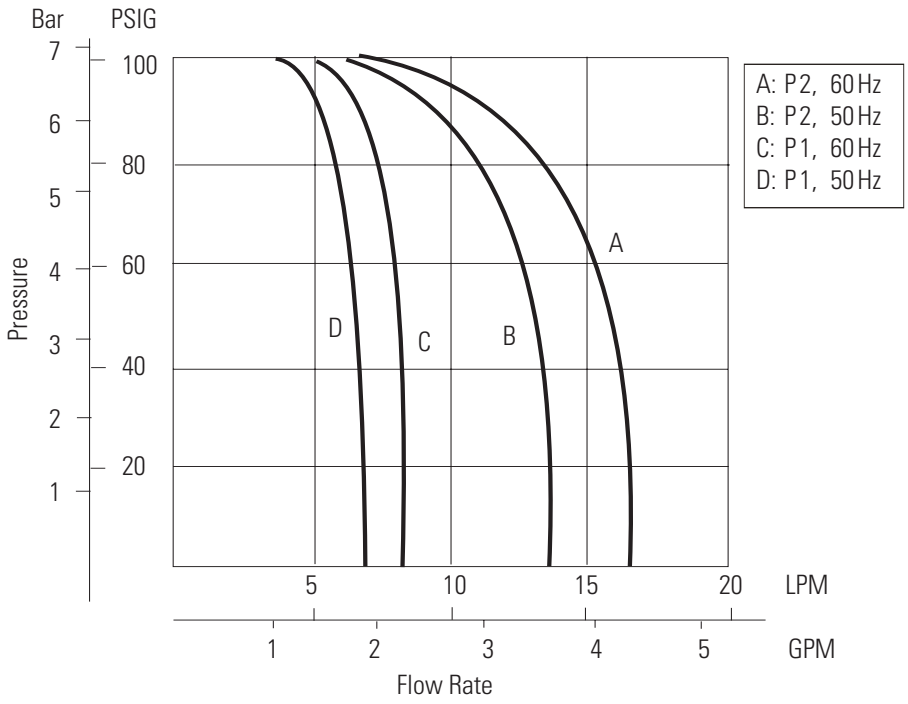

Pumping Capacity
Turbine Pump T1

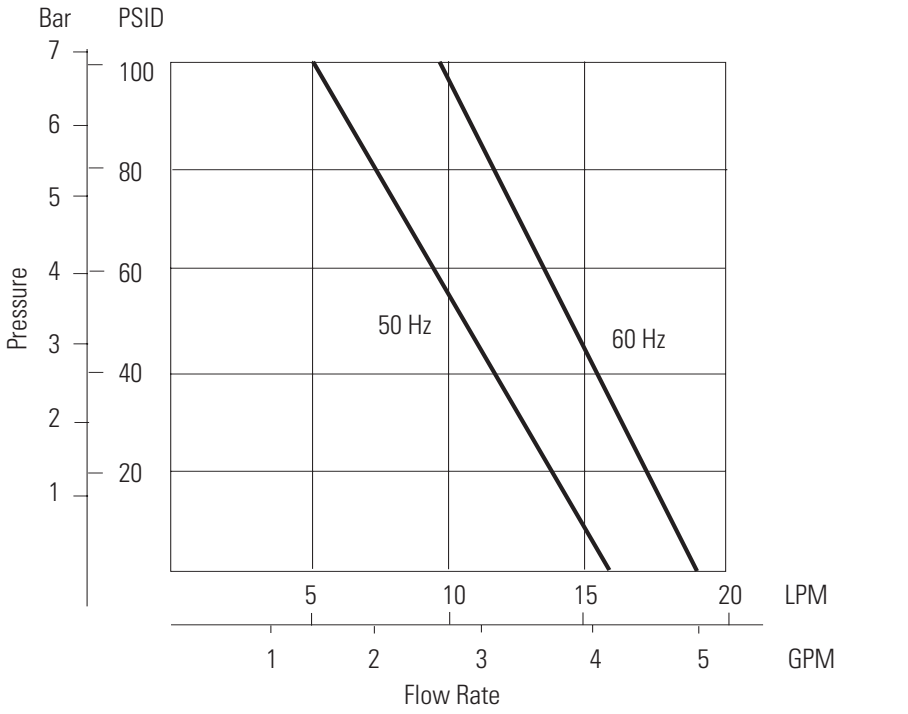

- Pump curves are nominal values. Pressure values for turbine pumps are differential pressures between the inlet and the outlet of the unit.
- Pump performance results were obtained with no restrictions on the return to the system or with any options installed. For example, utilizing the DI option will result in a 0.5 gpm flow reduction .
- Specifications obtained at sea level using water as the recirculating fluid, at a 20°C process setpoint, 25°C ambient condition, at nominal operating voltage. Other fluids, fluid temperatures, ambient temperatures, altitude or operating voltages will affect performance. See Section 3.

Pumping Capacity
Centrifugal Pump P3/P4

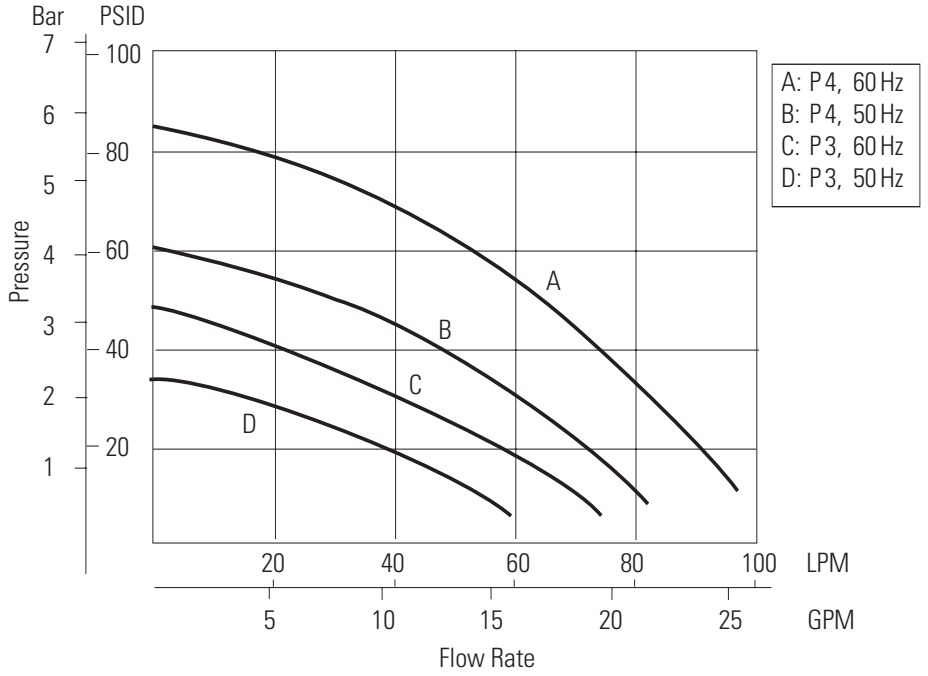

Pumping Capacity
Centrifugal Pump P5

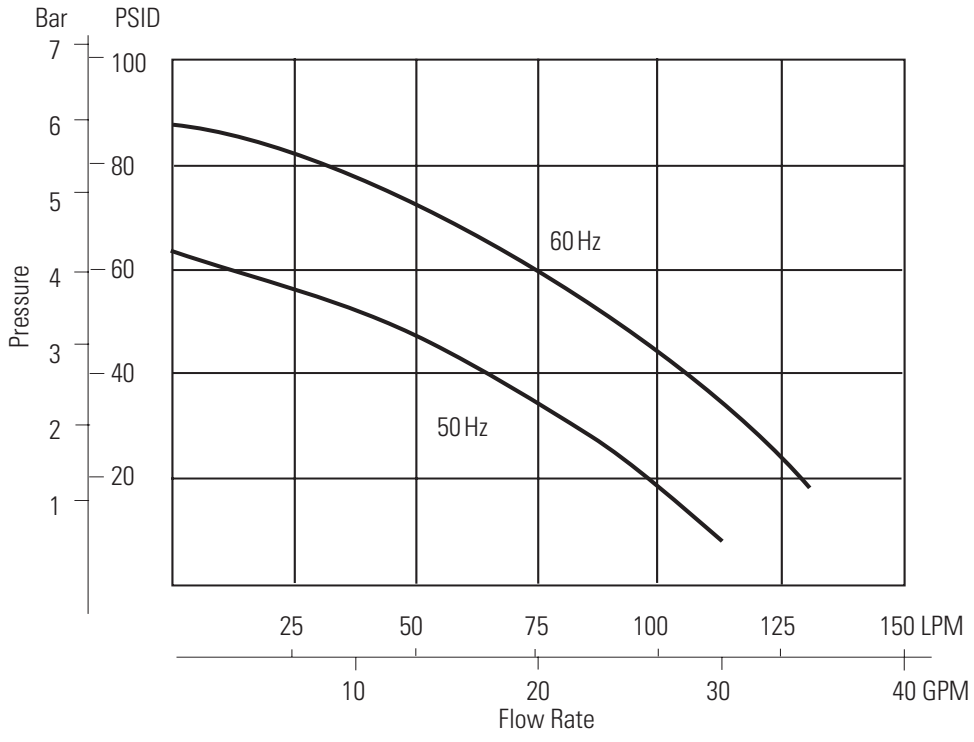

- Pump curves are nominal values. Pressure values for centrifugal pumps are differential pressures between the inlet and the outlet of the unit.
- Pump performance results were obtained with no restrictions on the return to the system or with any options installed. For example, utilizing the DI option will result in a 0.5 gpm flow reduction.
- Specifications obtained at sea level using water as the recirculating fluid, at a 20°C process setpoint, 25°C ambient condition, at nominal operating voltage. Other fluids, fluid temperatures, ambient temperatures, altitude or operating voltages will affect performance. See Section 3.
- Thermo Fisher Scientific reserves the right to change specifications without notice.

ThermoFlex900/1400
Dimensions
(inches/centimeters)

Front View

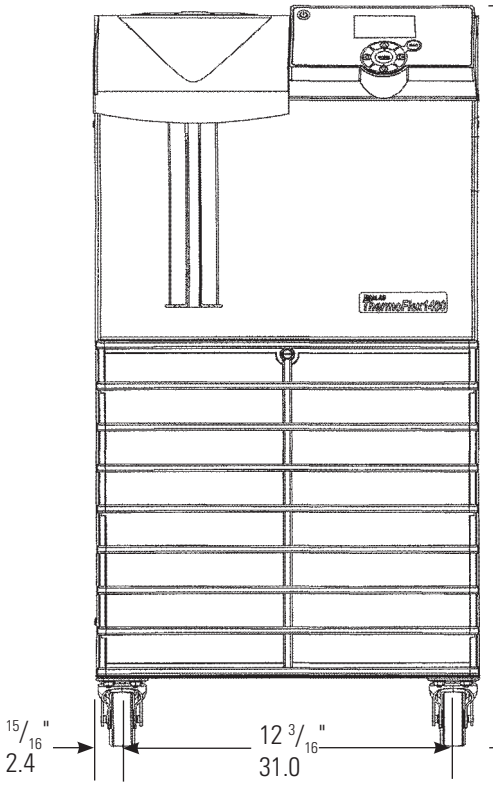

* Add 1/8" (3 mm) for SEMI units, see Section 5.

Side View

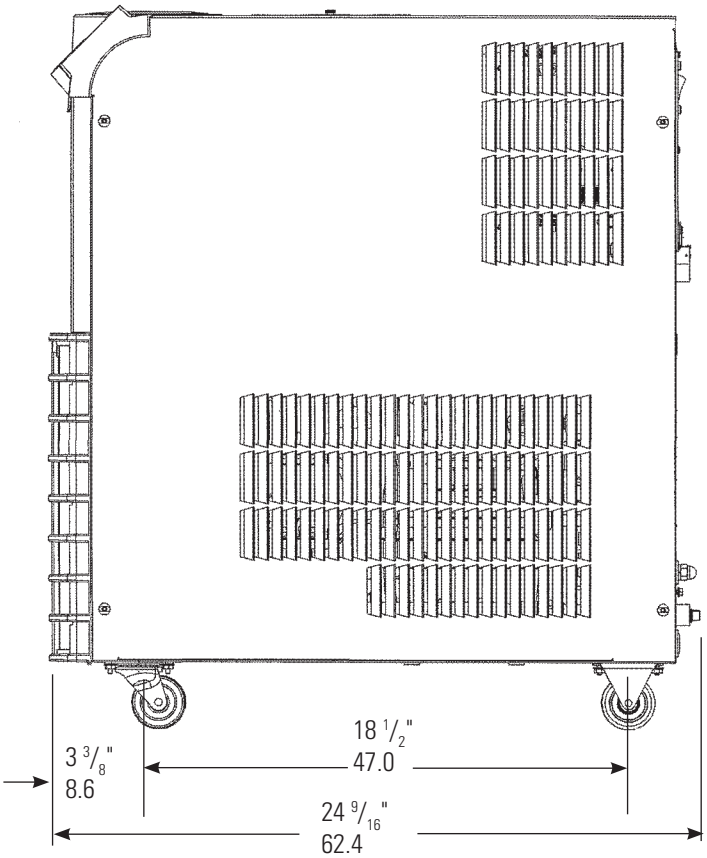

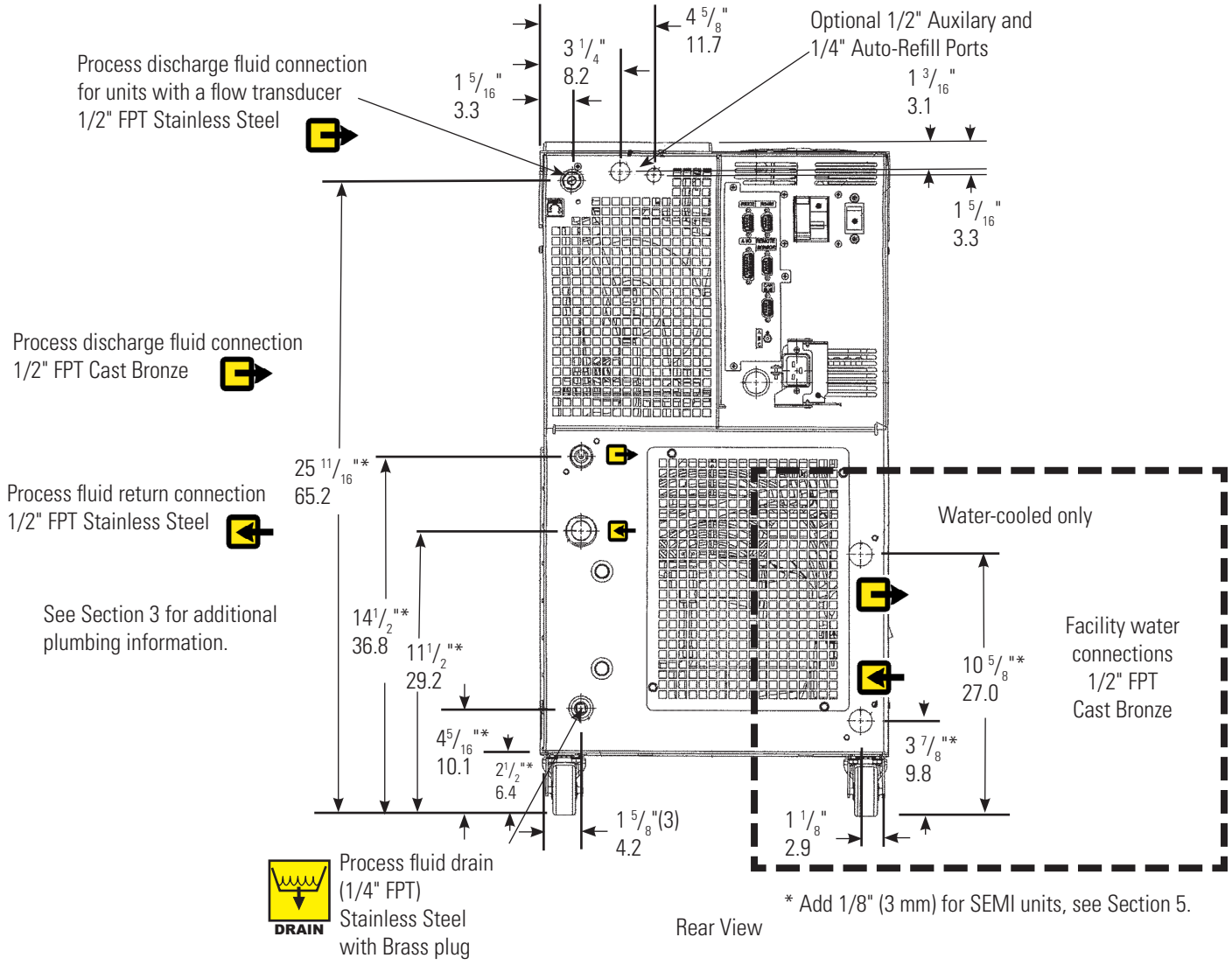

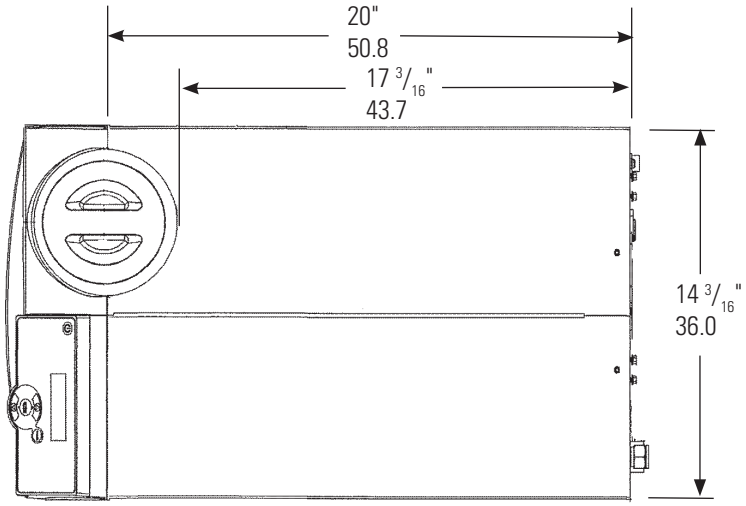

Shipping crate dimensions (approximate):

21" (53 cm) wide

35" (89 cm) tall

40" (102 cm) deep

- Thermo Fisher Scientific reserves the right to change specifications without notice.

ThermoFlex2500
Dimensions
(inches/centimeters)

Front View

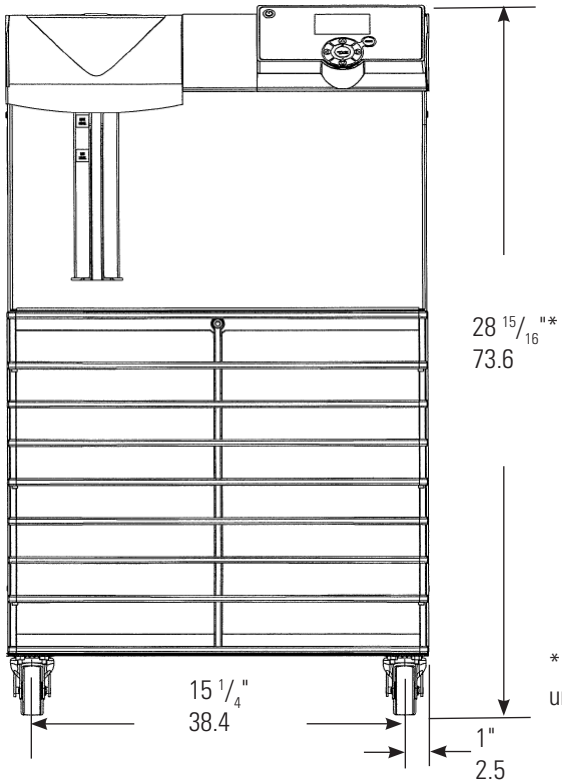

* Add 1/8" (3 mm) for SEMI units, see Section 5.

Side View

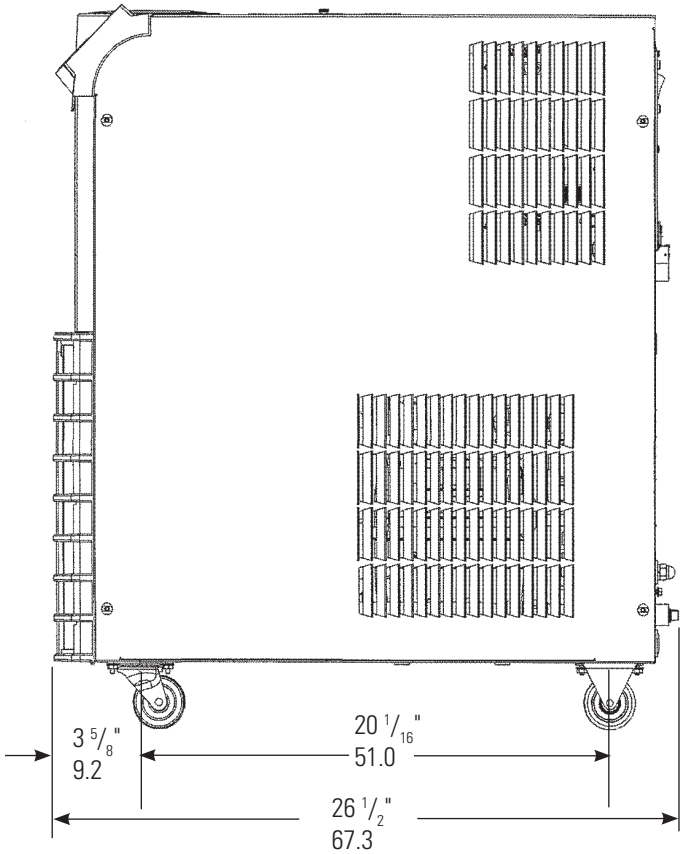

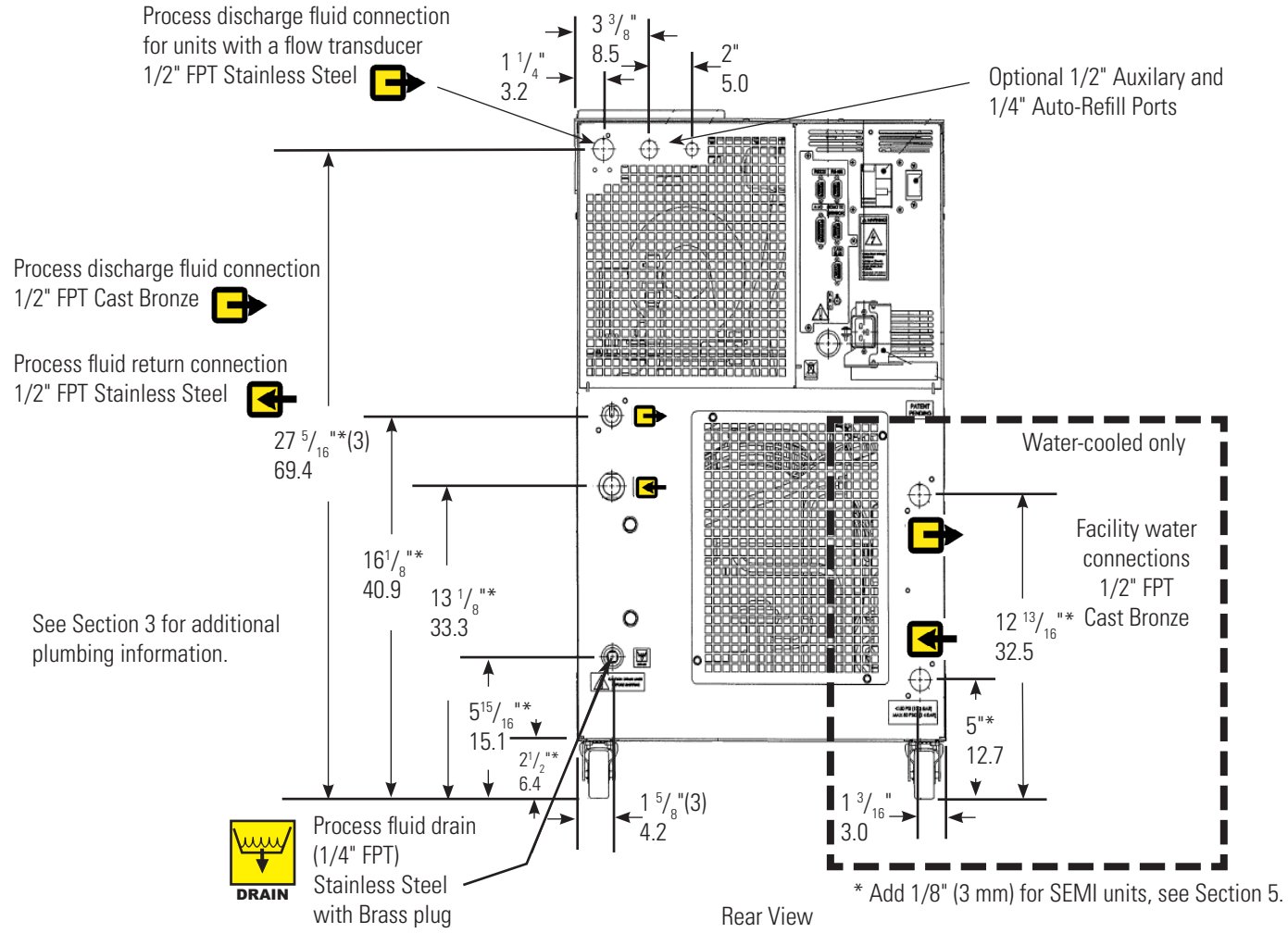

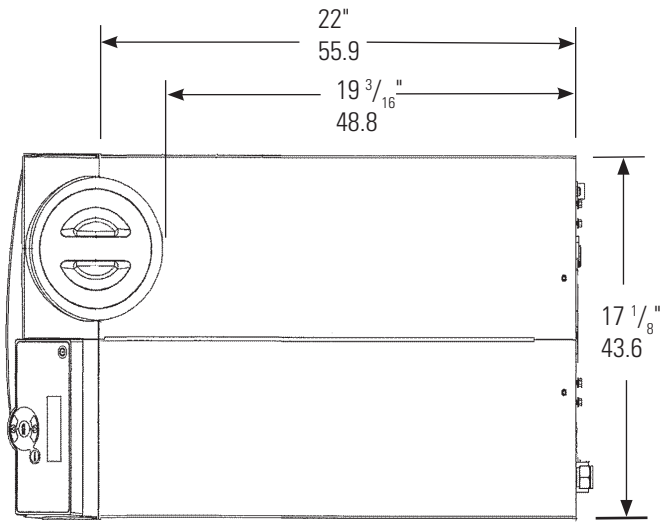

Top View

Shipping crate dimensions (approximate):

23" (58 cm) wide

36" (91 cm) tall

40" (102 cm) deep

- Thermo Fisher Scientific reserves the right to change specifications without notice.

ThermoFlex3500/5000
Dimensions
(inches/centimeters)

Front View

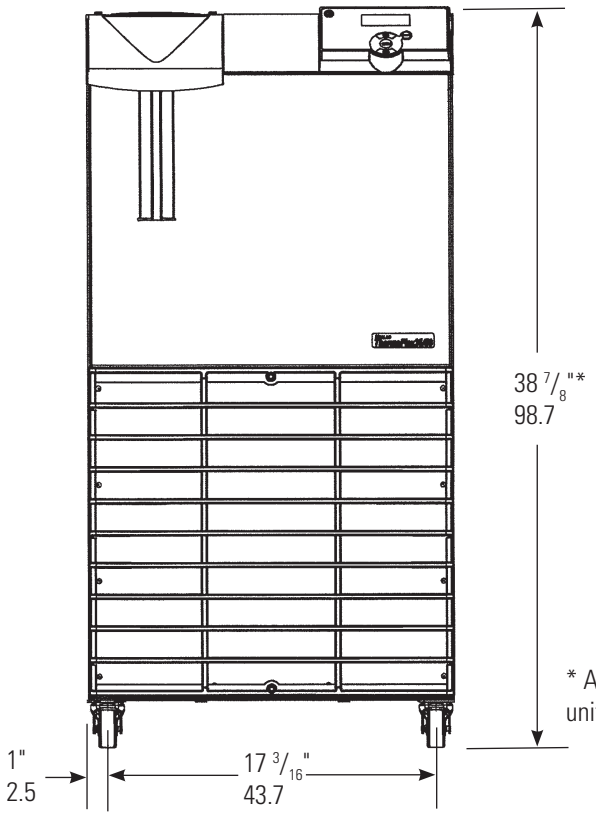

Side View

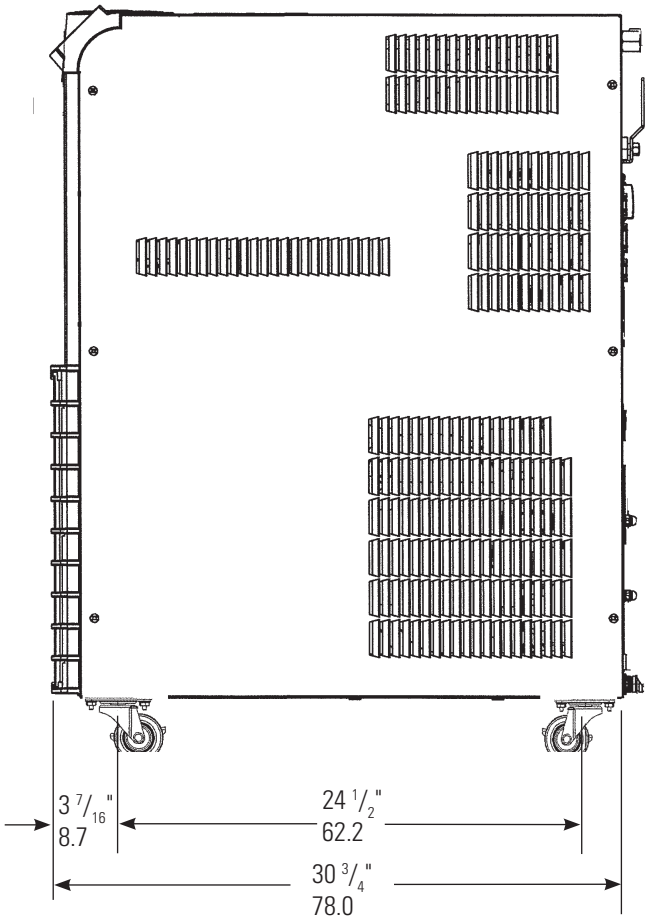

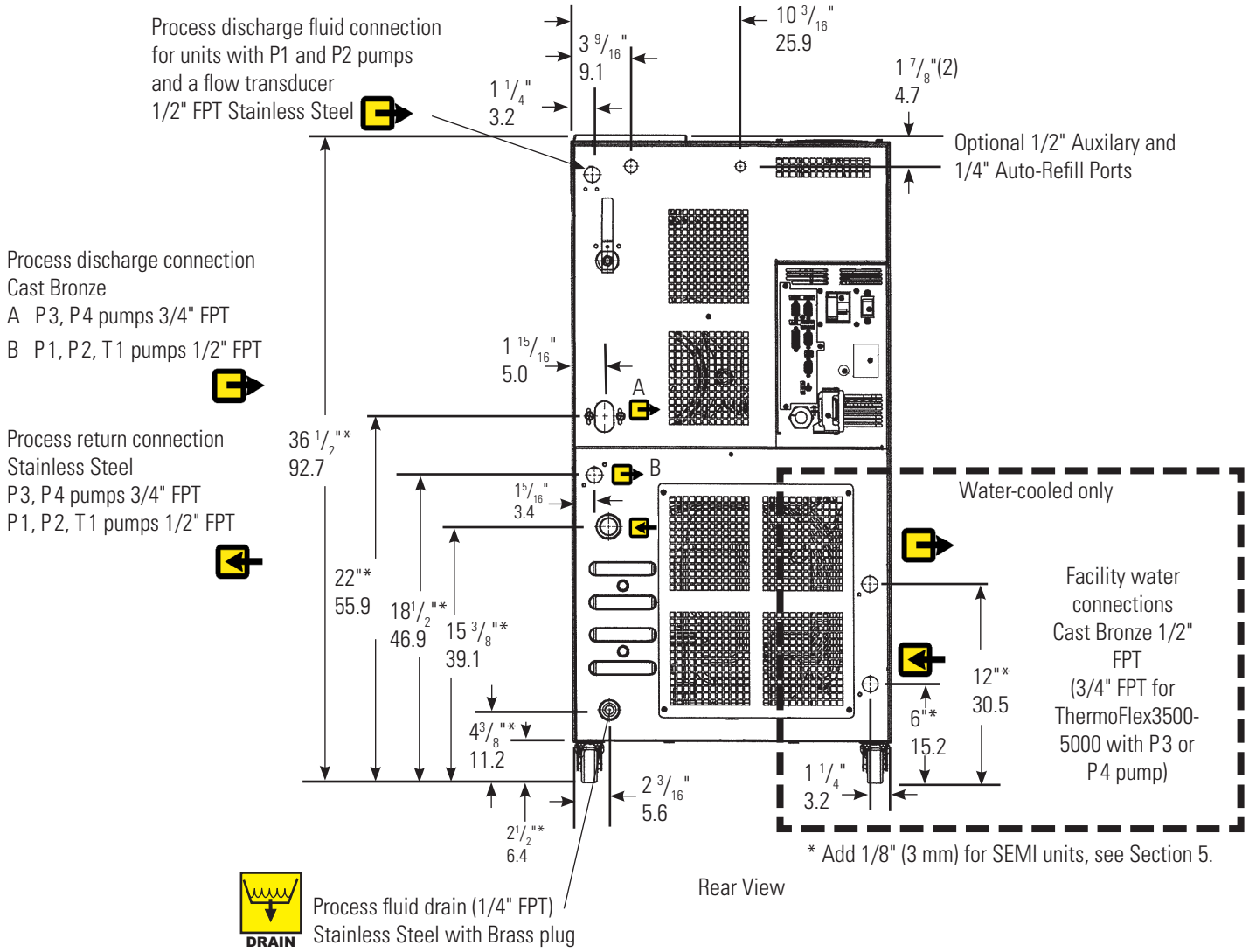

* Add 1/8" (3 mm) for SEMI units, see Section 5.

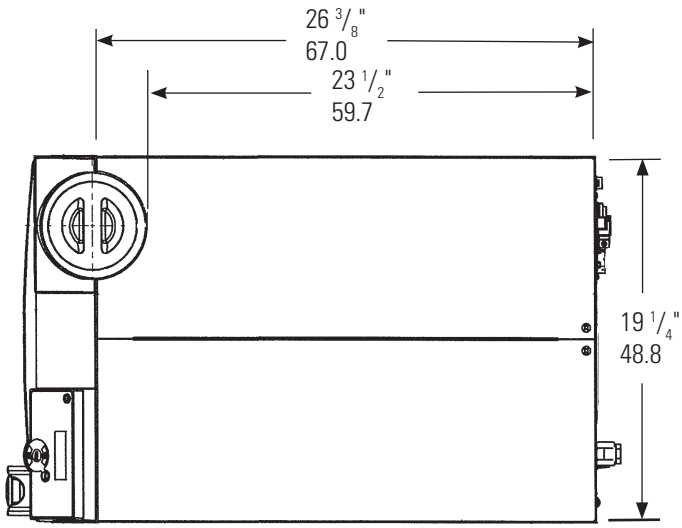

Top View

Shipping crate dimensions (approximate):

26" (66 cm) wide

48" (122 cm) tall

47" (119 cm) deep

- Thermo Fisher Scientific reserves the right to change specifications without notice.

ThermoFlex7500/10000
Dimensions
(inches/centimeters)

Side View

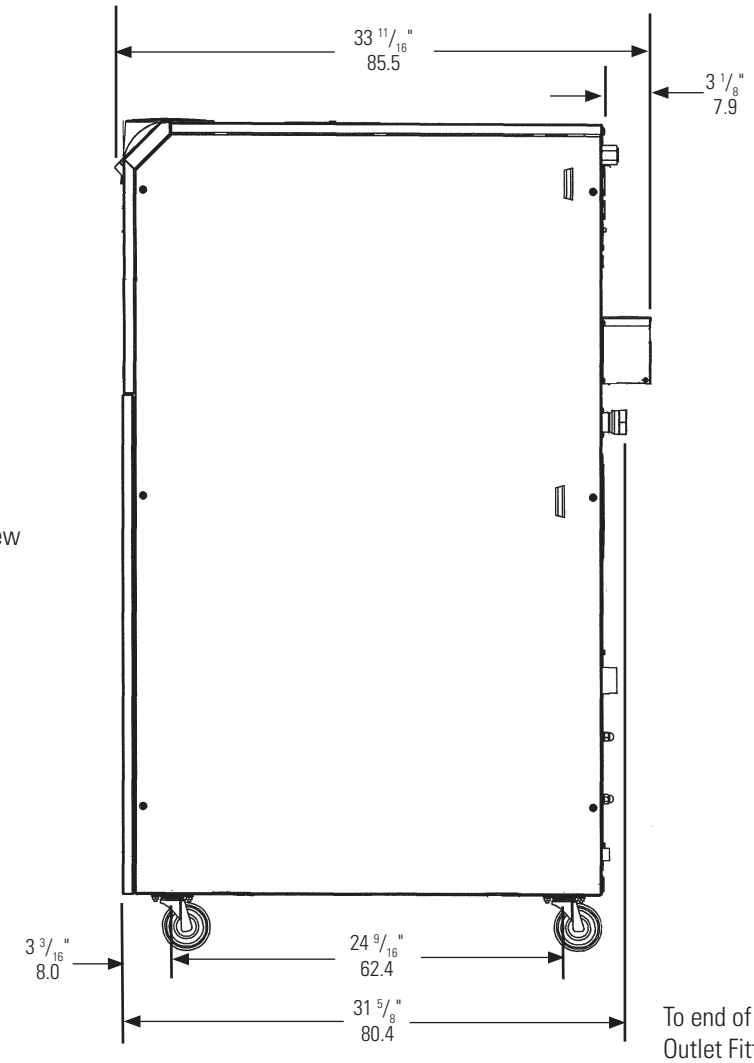

Top View

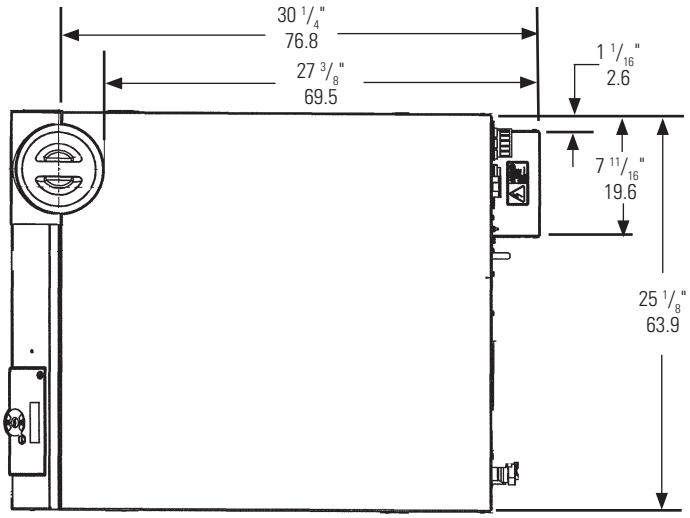

Air-cooled shipping crate dimensions (approximate):

35 3/4" (91 cm) wide

61 1/2" (156 cm) tall

46 3/8" (118 cm) deep

Water-cooled shipping crate dimensions (approximate):

35 3/4" (91 cm) wide

55 1/2" (141 cm) tall

46 3/8" (118 cm) deep

- Thermo Fisher Scientific reserves the right to change specifications without notice.

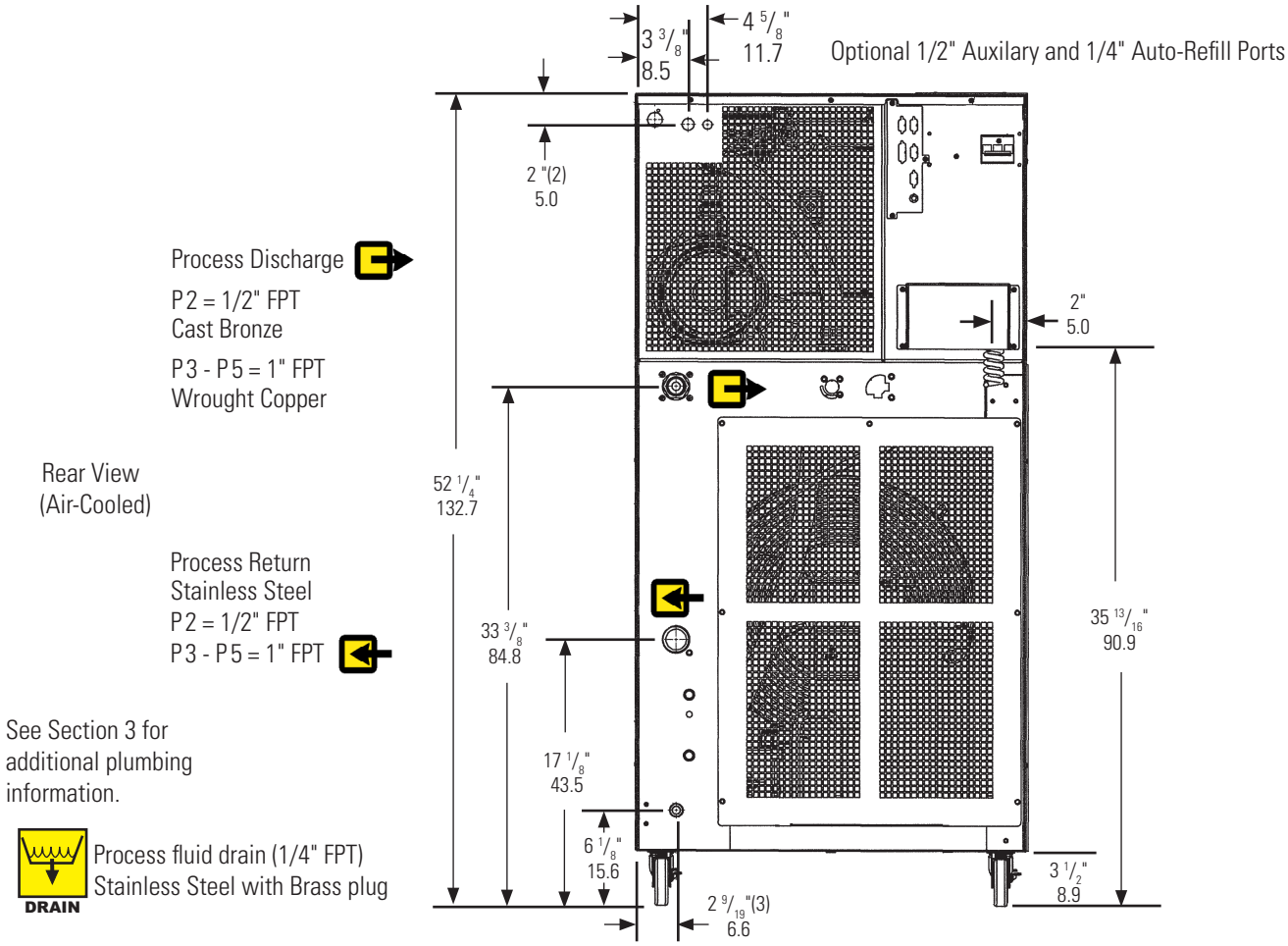
Optional 1/2" Auxilary and 1/4" Auto-Refill Ports
3 3/8" 8.5
4 5/8" 11.7
2 "(2) 5.0
Process Discharge
P2 = 1/2" FPT
Cast Bronze
P3 - P5 = 1" FPT
Wrought Copper
Rear View
(Air-Cooled)
Process Return
Stainless Steel
P2 = 1/2" FPT
P3 - P5 = 1" FPT
See Section 3 for
additional plumbing
information.
DRAIN
Process fluid drain (1/4" FPT)
Stainless Steel with Brass plug
52 1/4" 132.7
33 3/8" 84.8
17 1/8" 43.5
6 1/8" 15.6
2 9/19"(3) 6.6
2" 5.0
35 13/16" 90.9
3 1/2" 8.9

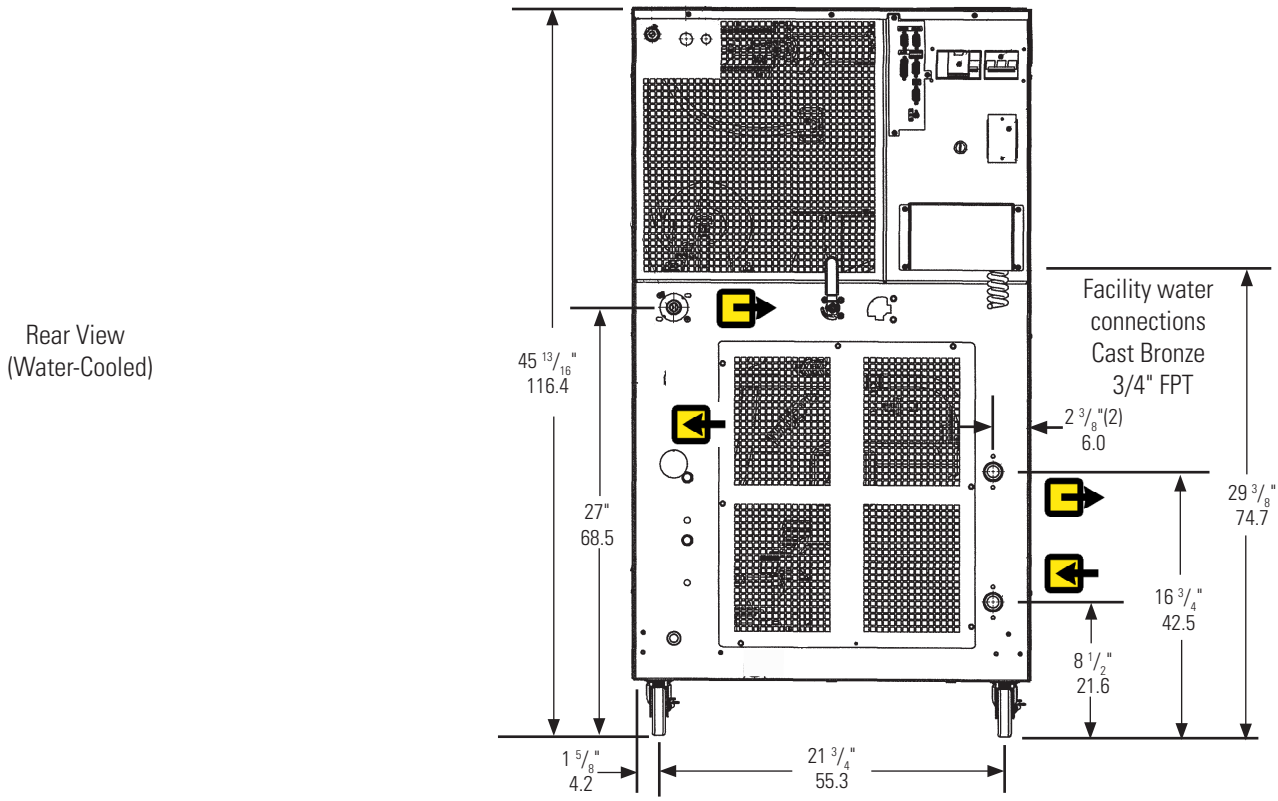
Rear View
(Water-Cooled)
Facility water
connections
Cast Bronze
3/4" FPT
45 13/16" 116.4
27" 68.5
2 3/8"(2) 6.0
29 3/8" 74.7
16 3/4" 42.5
8 1/2" 21.6
1 5/8" 4.2
21 3/4" 55.3

Section 3 Installation

Site Requirements

Ambient Temperature Range*	10°C to 40°C (50°F to 104°F)
Relative Humidity Range	10% to 80% (non-condensing)
Operating Altitude*	Sea Level to 8000 feet (2438 meters)
Overvoltage Category	II
Pollution Degree	2

*Because of the decrease in air density, maximum temperature for the air entering an air-cooled ThermoFlex is reduced by 1°C per 1,000 feet above sea level. In addition, cooling capacity is reduced 1.2% per 1,000 feet above sea level.



Never place the unit in a location where excessive heat, moisture, inadequate ventilation, or corrosive materials are present. ▲

Air-cooled units retain their full rated capacity at 20°C setpoint in ambient temperatures up to 25°C (77°F). For ambient temperatures above 25°C please de-rate the cooling capacity 3% for every 1°C above 25°C (77°F), up to a maximum ambient temperature of 40°C (104°F). Please note that when operating at a process temperature lower than 20°C the de-rate percentage may increase due to additional gains from losses to ambient.

NOTE Depending on the setpoint and ambient temperatures, there may be a heat gain or loss through the plumbing resulting in a variation from setpoint temperature at the application inlet. Applications with large temperature variations between ambient and setpoint temperatures, and/or long plumbing lengths, may require additional insulation. ▲

ThermoFlex2500 air-cooled units are equipped with a two-speed fan. Should the unit's internal ambient temperature reach 50°C for 30 seconds, or reach 53°C, the fan speed will switch from slow speed to high speed to maintain internal temperatures within acceptable limits. When the temperature reaches 44°C or below for at least 15 minutes the speed will return to low. When in high speed the unit's decibel level increases significantly.

NOTE High speed is required for the unit to achieve its 2500 watt cooling capacity. At high-end operating conditions the fan can be set to run at high speed all the time using the controller's Setup Loop, see Section 4. ▲

Units installed below the end-user application may enable system fluid to drain back into the chiller and cause spillage. Thermo Fisher offers an anti-drainback kit to prevent any spillage, see Section 5.

Air-cooled units can be installed with both sides blocked, or one side and the rear. See Figure 3-1. The front of the unit needs a minimum clearance of 24". Air will enter the front of the system and exit through the sides and rear.

Having two sides blocked can impact the unit's performance due to changes in air flow. If your installation requires two blocked sides please ensure that the following requirements are met:

Process Setpoint Temperature: Below 30°C (86°F)

Ambient: Below 40°C (104°F)

Before operating the unit in conditions outside any of those listed on this page please contact Thermo Fisher Scientific's Sales, Service and Customer Support to review your installation.

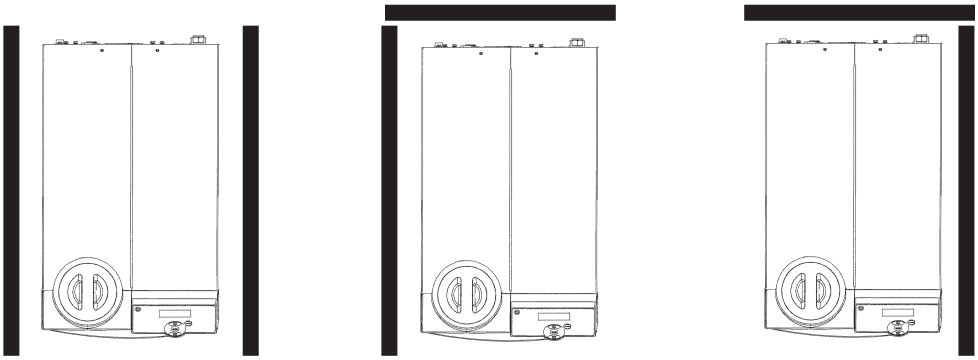

Figure 3-1 Minimum Clearance

Electrical Requirements



The unit construction provides protection against the risk of electrical shock by grounding appropriate metal parts. The protection may not function unless the power cord is connected to a properly grounded outlet. It is the user's responsibility to assure a proper ground connection is provided. ▲

The user is responsible to ensure that the power cord provided meets local electrical codes. If not, contact qualified installation personnel.

The unit is intended for use on a dedicated outlet. The ThermoFlex has an internal circuit protection that is equivalent (approximately) to the branch circuit rating. This is to protect the ThermoFlex, and is not intended as a substitute for branch circuit protection.

Electrical Service Requirements (Standard units):

ThermoFlex900	Voltage	Frequency	Phase	Branch Circuit Requirements	Line Cord Plug
	100 VAC	50 Hz	1Ø	15A	5-15P
	115 VAC	60 Hz	1Ø	15A	5-15P
	200 VAC	50 Hz	1Ø	15A	6-15P
	208-230 VAC	60 Hz	1Ø	15A	6-15P
	230 VAC	50 Hz	1Ø	*16A[1], 15A[2], 13A[3]	-

ThermoFlex1400	Voltage	Frequency	Phase	Branch Circuit Requirements	Line Cord Plug
	100 VAC	50 Hz	1Ø	20A	5-20P
	115 VAC	60 Hz	1Ø	20A	5-20P
	200 VAC	50 Hz	1Ø	15A	6-15P
	208-230 VAC	60 Hz	1Ø	15A	6-15P
	230 VAC	50 Hz	1Ø	*16A[1], 15A[2], 13A[3]	-

ThermoFlex2500	Voltage	Frequency	Phase	Branch Circuit Requirements	Line Cord Plug
	200 VAC P 1 P 2 Pump	50 Hz	1Ø	15A	6-15P
	208-230 VAC P 1 P 2 Pump	60 Hz	1Ø	15A	6-15P
	200 VAC T 1 Pump	50 Hz	1Ø	20A	6-20P
	208-230 VAC T 1 Pump	60 Hz	1Ø	20A	6-20P
	230 VAC	50 Hz	1Ø	*16A[1], 15A[2], 13A[3]	-

ThermoFlex3500/5000	Voltage	Frequency	Phase	Branch Circuit Requirements	Line Cord Plug
	200 VAC P 1 P 2 Pump	50 Hz	1Ø	15A	6-15P
	200 VAC T 1 P 3 Pump	50 Hz	1Ø	20A	6-20P
	200 VAC P 4 Pump	50 Hz	1Ø	30A	6-30P
	208-230 VAC P 1 P 2 Pump	60 Hz	1Ø	15A	6-20P
	208-230 VAC T 1 P 3 Pump	60 Hz	1Ø	20A	6-20P
	208-230 VAC P 4 Pump	60 Hz	1Ø	30A	6-30P
	230 VAC P 1 - P 4 Pump	50 Hz	1Ø	*16A[1], 15A[2], 13A[3]	-

ThermoFlex7500/10000	Voltage	Frequency	Phase	Branch Circuit Requirements	Line Cord Plug
	200 VAC P 2 P 3 Pump	50 Hz	3Ø	20A	L15-20P
	208-230 VAC P 2 P 3 Pump	60 Hz	3Ø	20A	L15-20P
	200 VAC P 5 Pump	50 Hz	3Ø	30A	L15-30P
	208-230 VAC P 5 Pump	60 Hz	3Ø	30A	L15-30P
	400 VAC	50 Hz	3Ø	16A	IEC309

* Refer to Appendix A for country specific ratings.

Electrical Service Requirements (Variable voltage units):

ThermoFlex900	Voltage	Frequency	Phase	Branch Circuit Requirements	Line Cord Plug
	115 VAC	60 Hz	1Ø	15A	5-15P*
	100 VAC	50/60 Hz	1Ø	15A	5-15P*

ThermoFlex1400	Voltage	Frequency	Phase	Branch Circuit Requirements	Line Cord Plug
	115 VAC	60 Hz	1Ø	20A	-
	100 VAC	50/60 Hz	1Ø	20A	-

* United States and Japan only. All other plugs are country specific.

Electrical Service Requirements (Global Voltage units):

ThermoFlex900	Voltage	Frequency	Phase	Branch Circuit Requirements	Line Cord Plug
	200/208/230 VAC	60 Hz	1Ø	15A	-
	200/230 VAC	50 Hz	1Ø	**16A[1], 15A[2], 13A[3]	-

ThermoFlex1400	Voltage	Frequency	Phase	Branch Circuit Requirements	Line Cord Plug
	200/208/230 VAC	60 Hz	1Ø	15A	-
	200/230 VAC	50 Hz	1Ø	**16A[1], 15A[2], 13A[3]	-

ThermoFlex2500	Voltage	Frequency	Phase	Branch Circuit Requirements	Line Cord Plug
	200 VAC T 1 Pump	60 Hz	1Ø	15A	-
	208-230 VAC T 1 Pump	60 Hz	1Ø	20A	-
	230 VAC	50 Hz	1Ø	*16A[1], 15A[2], 13A[3]	-

ThermoFlex3500/5000	Voltage	Frequency	Phase	Branch Circuit Requirements	Line Cord Plug
	200/208-230 VAC P 1 P 3 Pump	50/60 Hz	1Ø	15A	-
	200/208-230 VAC T 1 P 3 Pump	50/60 Hz	1Ø	20A	-
	200/208-230 VAC P 4 Pump	50/60 Hz	1Ø	30A	Hard wired

ThermoFlex7500/10000	Voltage	Frequency	Phase	Branch Circuit Requirements	Line Cord Plug
	400 VAC	60 Hz	3Ø	20A	Hard wired
	460 VAC	60 Hz	3Ø	20A	Hard wired

** Units selected for 230 VAC operation have a range of -10% to +7%. Refer to Appendix A for country specific ratings.

For installation information on Variable Voltage and Global Voltage units refer to Appendix B.

Refer to the nameplate label located on the rear of the unit for specific electrical requirements.

Hard Wire Installation

For personal safety and equipment reliability, only a qualified technician should perform the following procedure. ▲

- Remove the six screws securing the electrical box cover to the rear of the unit.

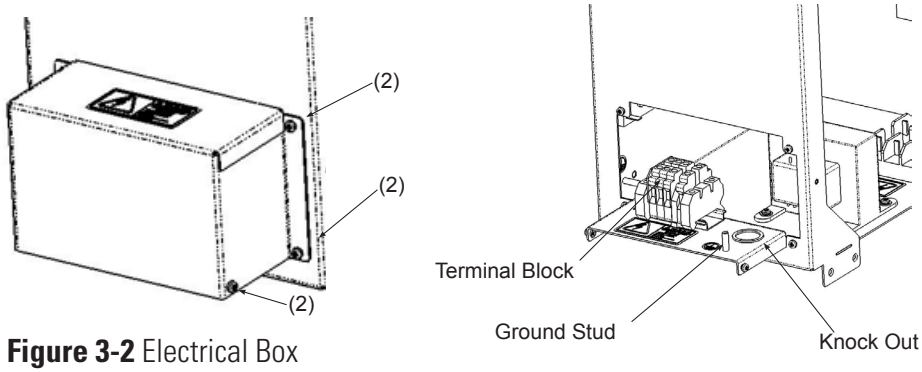

Figure 3-2 Electrical Box

- Remove the double knock out ($^{7}/_{8}$" and 1 $^{3}/_{32}$").
- Insert the cable through the hole.
- Refer to the label in the electrical box to configure your unit, see Figure 3-3.
- Secure the cable's ground wire to the ground stud.
- Reinstall the cover.

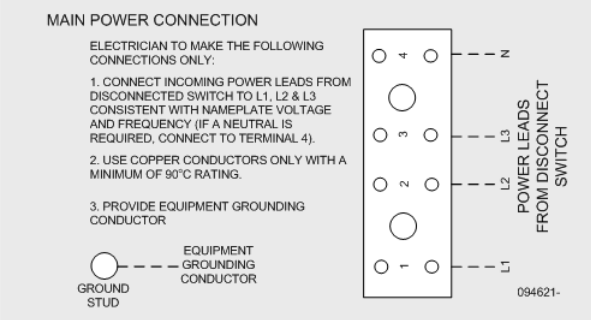

Figure 3-3 Sample Label

Plumbing Requirements

Ensure that all shipping plugs are removed before installation.

Never connect the process fluid lines to your facility water supply or any pressurized liquid source. ▲

To prevent damage to the unit's plate exchanger, centrifugal pumps require a 4.0 gpm (15.1 lpm) minimum flow rate. ▲

P1 and P2 pumps are capable of producing 185 psig. Ensure your plumbing is rated to withstand this pressure at your operating temperature. An external pressure relief valve is available, see Section 5. ▲

NOTE Ensure your plumbing installation will develop a back pressure to the ThermoFlex greater than 3 PSIG. A lack of back pressure will shut down the unit. ▲

The process fluid connections are located on the rear of the unit and are labeled (PROCESS OUTLET) and (PROCESS INLET). Connect the PROCESS OUTLET to the fluid inlet on your application. Connect the PROCESS INLET to the fluid outlet on your application. Ensure all connections are secure and that the proper sealant/lubricant for the fitting material is used. (If Teflon® tape is used, ensure the tape does not overhang the first thread as it could shred and get into the fluid.)

Process Fluid Connections (FNPT)		
Outlet		
ThermoFlex900 - 10000	P1 P2 T1	1/2" cast bronze
ThermoFlex3500 - 5000	P3 P4	3/4" cast bronze
ThermoFlex7500 - 10000	P3 P5	1" wrought copper
Inlet - Same size as outlet		all units stainless steel

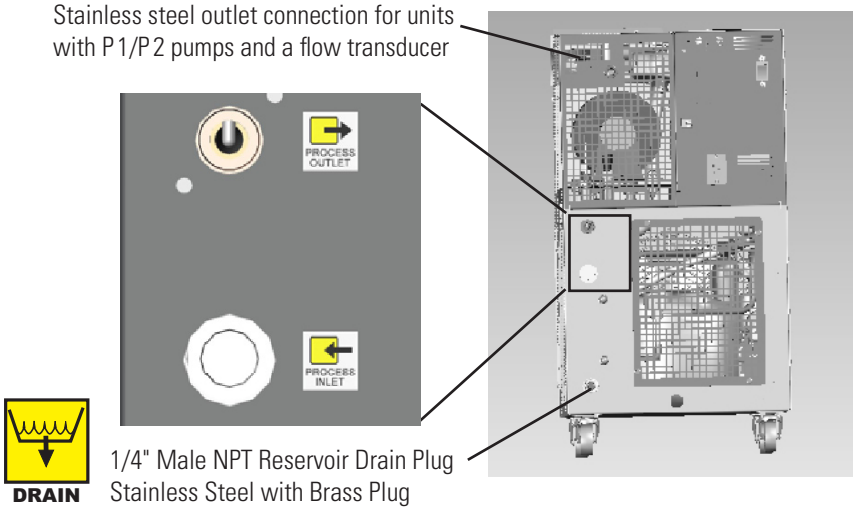

Figure 3-4 Plumbing Connections (1 of 2)

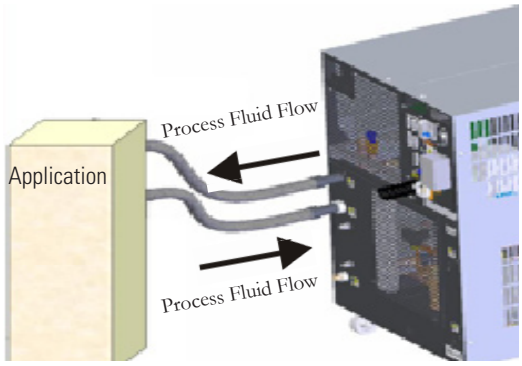

Keep the distance between the unit and the instrument being cooled as short as possible. Ensure tubing is straight and without bends. If diameter reductions are required, make them at the inlet and outlet of your application, not at the ThermoFlex.

Figure 3-4 Plumbing Connections (2 of 2)

Water-cooled Units

For water-cooled units the facility water plumbing connections are also located on the rear of the unit and are labeled FACILITY INLET and FACILITY OUTLET. The connections are ½" Female NPT for ThermoFlex900 - 5000, ¾" Female NPT for ThermoFlex7500 - 10000. For all units, both connections are cast bronze.

Connect the FACILITY INLET to your facility water supply. Connect the FACILITY OUTLET to your facility water return or drain. Ensure all connections are secure and that the proper sealant/lubricant for the fitting material is used. (If Teflon® tape is used, ensure the tape does not overhang the first thread as it could shred and get into the fluid.)

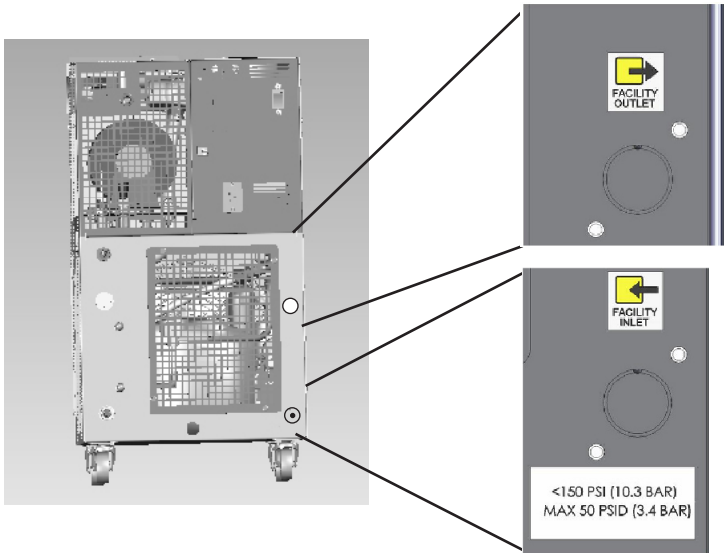

Figure 3-5 Plumbing Connections, Water-cooled Units

Process Fluid Requirements

NEVER use flammable or corrosive fluids with this unit. Do not use automotive antifreeze. Commercial antifreeze contains silicates that can damage the pump seals. Use of any fluid not listed below will void the manufacturer's warranty. ▲

Acceptable fluids are:

- Filtered/Single Distilled water
- 0 - 75% Ethylene Glycol/Water
- 0 - 75% Propylene Glycol/Water
- Deionized water (1 - 3 MΩ- cm, compensated)

Before using any fluid or performing maintenance where contact with the fluid is likely refer to the manufacturer's MSDS for handling precautions. ▲

To prevent freezing/glazing of the plate exchanger, ThermoFlex7500 and 10000 units require the use of 50/50 EG/water or 50/50 PG/water below 10°C process temperature. ▲

When using a process fluid mixture of ethylene glycol and water or propylene glycol and water, check the fluid concentration and pH on a regular basis. Changes in concentration and pH can impact system performance. ▲

Ethylene glycol (EG) is hygroscopic, it will absorb water from its environment. This can affect the freezing point and boiling point of the fluid over time and may result in system failure. ▲

When using EG/water or PG/water, top-off with plain water. After top-off check the fluid concentration. ▲

Do not use a Deionization (DI) filter cartridge with Inhibited EG or Inhibited PG. A DI filter will remove inhibitors from the solution rendering the fluid ineffective against corrosion protection. Also, inhibitors increase fluid conductivity. ▲

Compatibility with Acceptable Fluids

Filtered/Single Distilled Water
This fluid is acceptable primarily because it has all microorganisms that cause biological fouling removed through vaporizing and condensing the water. However, distilled water does not remain pure for very long when exposed to the atmosphere. Air-born spores can contaminate the water and activate algae growth. An effective maintenance plan would include switching out the fluid with newly distilled water every six months. The particulates that have been filtered out in the process are also preventive in keeping the system "clean" of contaminants.

Uninhibited Ethylene Glycol/Water
Ethylene glycol is used to depress the freezing point of water as a coolant. We recommend not using the uninhibited (no corrosion additives) ethylene glycol. It is more corrosive to copper than plain water so it is not recommended unless required for the application.

Inhibited Ethylene Glycol/Water
Inhibited glycol can be used to increase the operating temperature range of the fluid but not as a "pre-mixed anticorrosive" solution. Industry standards use a pH standard of 8 to determine when the fluid has become corrosive. Dowtherm® is an ethylene based product that contains dipotassium phosphates in a 4% concentration. The recommended use of Dowtherm® is mixing with distilled or deionized water or water that contains less than 25 ppm chloride and sulfate and less than 100 ppm total hardness of CACO3.

The general term, inhibited glycol/water, is too close to meaning inhibited water. Inhibited water can have many types of additives including chromate that will quickly foul the cooling system. Some inhibitor additives can release the bonding agent in the carbon graphite in P1 and P2 pumps so they are incompatible, such as Sodium Hydroxide.

Uninhibited Propylene Glycol/Water
Although the use of propylene glycol is similar to ethylene glycol, propylene glycol is considered "safe" to use in the food industry.

Inhibited Propylene Glycol/Water
Same issues as with uninhibited propylene and inhibited ethylene glycol.

Process Water Quality and Standards

Process Fluid	Permissible (PPM)	Desirable (PPM)
Microbiologicals		
(algae, bacteria, fungi)	0	0
Inorganic Chemicals		
Calcium	<25	<0.6
Chloride	<25	<10
Copper	<1.3	<1.0
0.020 ppm if fluid in contact with aluminum		
Iron	<0.3	<0.1
Lead	<0.015	0
Magnesium	<12	<0.1
Manganese	<0.05	<0.03
Nitrates\Nitrites	<10 as N	0
Potassium	<20	<0.3
Silicate	<25	<1.0
Sodium	<20	<0.3
Sulfate	<25	<1
Hardness	<17	<0.05
Total Dissolved Solids	<50	<10
Other Parameters		
pH	6.5-8.5	7-8
Resistivity	0.01*	0.05-0.1*

* MΩ-cm (compensated to 25°C)

Unfavorably high total ionized solids (TIS) can accelerate the rate of galvanic corrosion. These contaminants can function as electrolytes which increase the potential for galvanic cell corrosion and lead to localized corrosion such as pitting. Eventually, the pitting will become so extensive that refrigerant will leak into the water reservoir.

As an example, raw water in the United States averages 171 ppm (of NaCl). The recommended level for use in a water system is between 0.5 to 5.0 ppm (of NaCl).

Recommendation: Initially fill the tank with distilled or deionized water. Do not use untreated tap water as the total ionized solids level may be too high. This will reduce the electrolytic potential of the water and prevent or reduce the galvanic corrosion observed.

Water Treatment Kit (North America Only)

A Thermo Fisher Treatment Kit is available and is designed to minimize the effects of corrosion, scale, fouling, and microbial contamination. It allows the system to continue providing reliable service with optimal efficiency for the life of the unit.

The kit includes a biocide and corrosion inhibitor capable of treating up to ten gallons of application water and is designed to provide protection for a period of six months. This kit is compatible with the following fluids:

- Filtered/Single Distilled Water
- Uninhibited Ethylene Glycol/Water
- Uninhibited Propylene/Water
- Deionized (DI) Water*
- Reverse Osmosis (RO) Water

*Do not use the Thermo Fisher Water Treatment Kit with a DI filtered system; the filter will remove a portion of the reagent's active ingredients limiting its effectiveness.

Facility Water Quality and Standards (water-cooled units)

Facility Water	Permissible (PPM)	Desirable (PPM)
Microbiologicals		
(algae, bacteria, fungi)	0	0
Inorganic Chemicals		
Calcium	<40	<0.6
Chloride	<250	<25
Copper	<1.3	<1.0
0.020 ppm if fluid in contact with aluminum		
Iron	<0.3	<0.1
Lead	<0.015	0
Magnesium	<12	<0.1
Manganese	<0.05	<0.03
Nitrates\Nitrites	<10 as N	0
Potassium	<20	<0.3
Silicate	<25	<1.0
Sodium	<20	<0.3
Sulfate	<250	<50
Hardness	<17	<0.05
Total Dissolved Solids	<50	<10

NOTE A corrosion inhibitor is recommended if mixed metals are in the facility water loop. ▲

Facility Water Requirements (water-cooled units)

Facility Water Maximum Inlet Pressure must not exceed 150 PSIG.

Facility Water Maximum Pressure Differential must not exceed 50 PSID under any condition.
(Pressure Differential = Inlet Pressure - Outlet Pressure)

NOTE Before using facility water that is above 35°C contact Thermo Fisher Scientific.

ThermoFlex1400

The facility water must meet the following conditions for the units to maintain their full rated capacity.

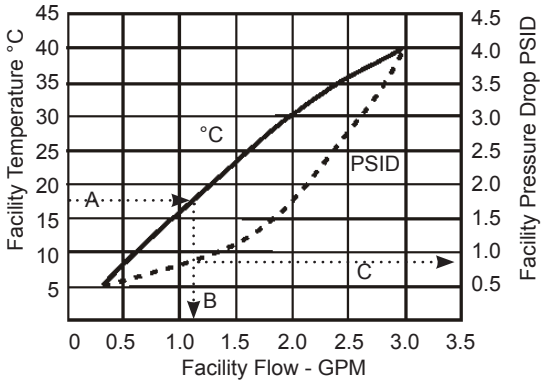

Example:
Follow the ·····► lines.
Start with a known, i.e. facility water temperature.
A - go across to temperature curve
B - drop down to determine the minimum required facility flow.
C - Where B crosses the PSID curve, go across to determine the minimum required PSID.

ThermoFlex2500

The facility water must meet the following conditions for the units to maintain their full rated capacity.

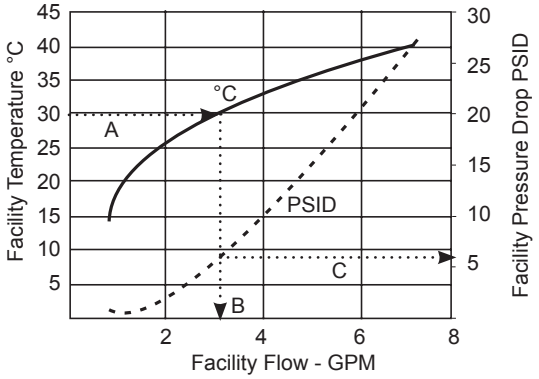

Example:
Follow the ·····► lines.
Start with a known, i.e. facility water temperature.
A - go across to temperature curve
B - drop down to determine the minimum required facility flow.
C - Where B crosses the PSID curve, go across to determine the minimum required PSID.

ThermoFlex3500/5000

The facility water must meet the following conditions for the units to maintain their full rated capacity.

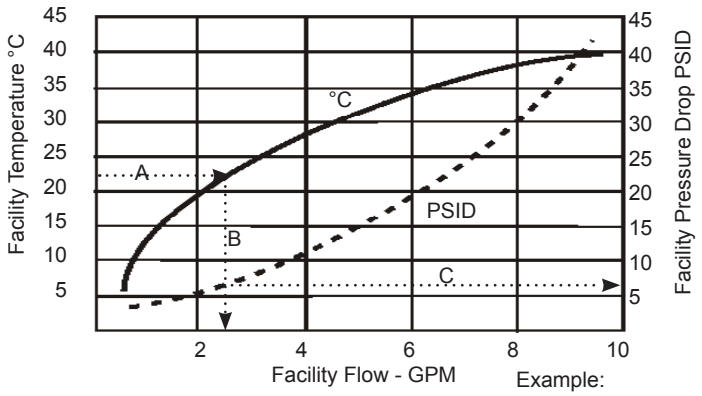

Example:
Follow the ·····► lines.
Start with a known, i.e. facility water temperature.
A - go across to temperature curve
B - drop down to determine the minimum required facility flow.
C - Where B crosses the PSID curve, go across to determine the minimum required PSID.

ThermoFlex7500/10000

The facility water must meet the following conditions for the units to maintain their full rated capacity.

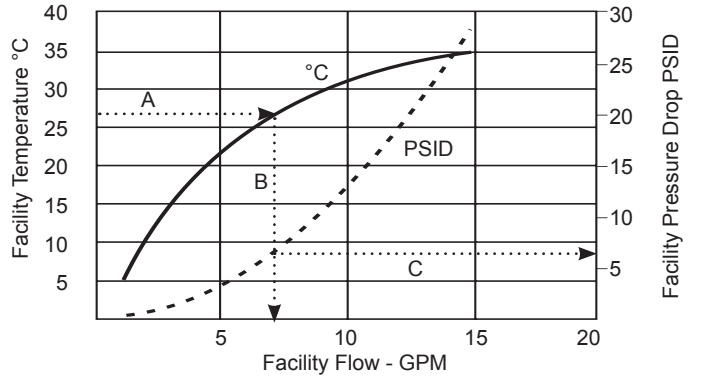

Example:
Follow the ·····► lines.
Start with a known, i.e. facility water temperature.
A - go across to temperature curve
B - drop down to determine the minimum required facility flow.
C - Where B crosses the PSID curve, go across to determine the minimum required PSID.

Filling Requirements

Ensure the reservoir drain plug on the back of the unit is in place and that all plumbing connections are secure.

Before using any fluid refer to the manufacturer's MSDS for handling precautions. ▲

Locate and remove the reservoir cap by unscrewing it counterclockwise.

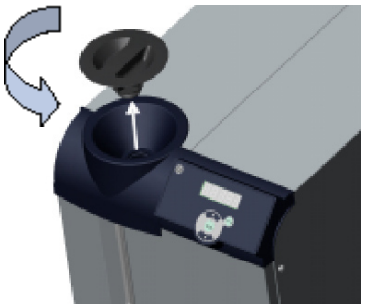

Figure 3-6 Reservoir Cap

To prevent the introduction of particulates into the system, fill the unit with the reservoir bag filter in place. Units are shipped with a bag filter in place. For information on changing the bag filter, see Section 6.

The reservoir has a sight tube and ball for easy fluid level monitoring. *Slowly* fill the reservoir with clean process fluid through the funnel only, failure to comply may result in internal spillage.

NOTE Filling the reservoir above MAX LEVEL fill line will result in a unit over flow error (**O FLO**)causing the unit to shut down. ▲

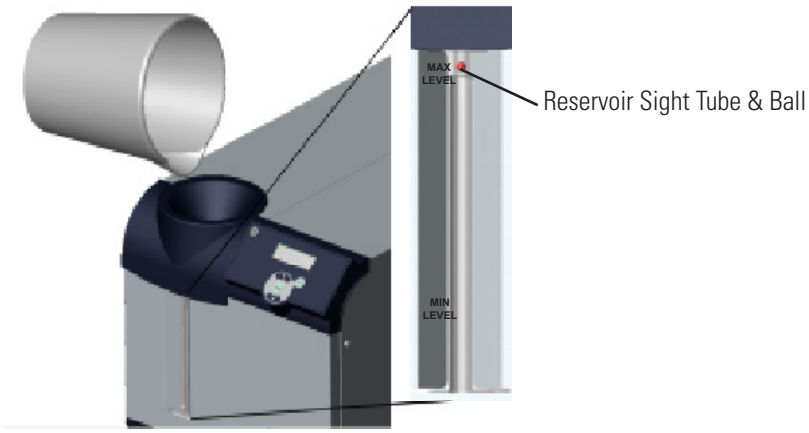

Figure 3-7 Reservoir Sight Tube & Ball

Since the reservoir capacity may be small compared to your application and air may need to be purged from the lines, have extra cooling fluid on hand to keep the system topped off when external circulation is started.

Replace the reservoir cap by screwing it clockwise. Cap should be hand tight.

Section 4 Operation

Basic Controller

The controller controls temperature using a Proportional-Integral-Derivative (PID) algorithm. It is designed with an easy to use operator interface.

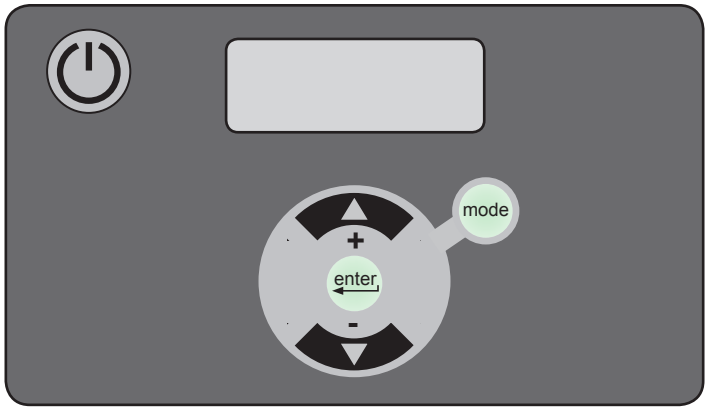

Figure 4-1 Basic Controller



This key is used to start and stop the unit.



This key is used to navigate through the controller displays, to make changes and to save changes once they are made. It is also used to clear error codes.



This key is also used to navigate through controller displays.



The up arrow key is used to navigate through the controller displays and to increase adjustable values.



The down arrow key is used to navigate through the controller displays and to decrease adjustable values.

Setup

NOTE For first time use, please refer to the quick start instructions included with your unit or the copy in this manual. The manual's version follows the Table of Contents. ▲

Before starting the unit, double check all electrical and plumbing connections. Have extra recirculating fluid on hand. If the unit will not start refer to Section 7 Troubleshooting.

If the unit is equipped with a deionization filter cartridge refer to Section 5 for installation.

Start Up

- Place the optional GFCI breaker located on the rear of the unit to the up position.
- Place the circuit protector located on the rear of the unit to the on (I) position. The display will indicate a series of upward scrolling bars (☰ ☰) .
- The bars will scroll upward indicating the controller is initializing the unit. The initialization takes approximately 15 seconds.
- When the bars disappear the controller display will go blank.
- Press the ⏻ key on the controller. The controller will show the process fluid temperature. The pump and refrigeration system will also start. **NOTE** You can press the ⏻ key anytime after placing the circuit protector to the on position. ▲

⚠ **If the auto restart is enabled and the unit shuts down as a result of a power failure, when power is restored the unit will automatically restart. Auto restart is enabled using the Setup Loop, see Setup Loop in this Section. ▲**

If desired, press the key to display the pump's discharge pressure - **P1**. The display will alternate between **P1** and the pump's discharge pressure value.

If the unit is equipped with an optional flow transducer, pressing again will display the flow rate - **FLo**. The display will alternate between **FLo** and the flow rate value.

After displaying **P1** or **FLo** for 60 seconds, if the key is not depressed the display will automatically revert to the process fluid temperature.

Press again to display the process fluid temperature.

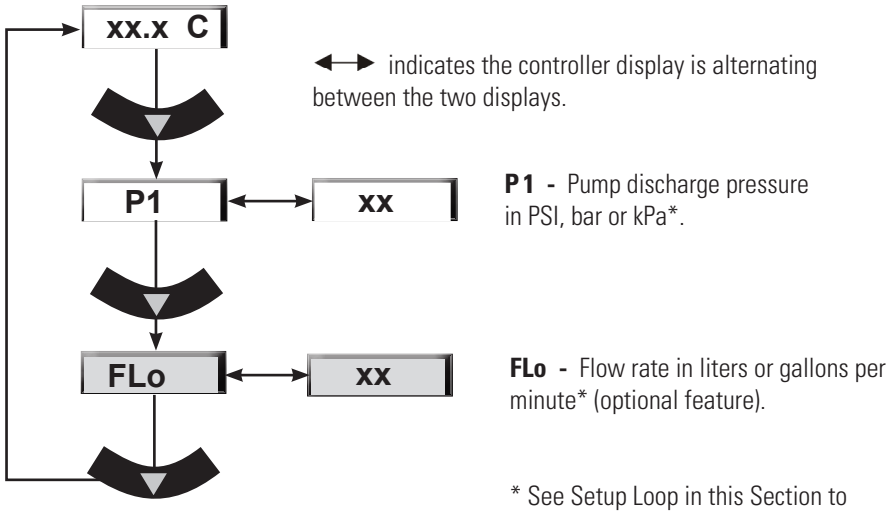

Figure 4-2 Main Loop

Controller Loops

The controller has the capability to display various loops which indicate operating conditions and parameters within the unit. The loops are selected and changed by pressing the appropriate keys.

When the controller is first powered up the unit goes through a short initialization (~15 seconds) and then displays the process fluid temperature. Use the key combination shown below to scroll through the loops.

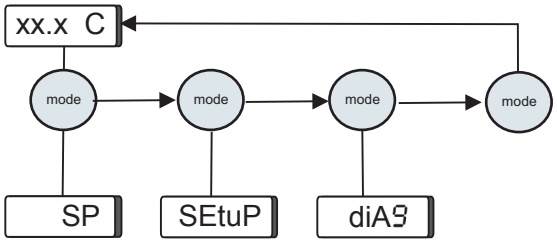

Figure 4-3 Controller Loops (Unit running)

SP is the Setpoint Loop and is used to display and change the setpoint. The setpoint is the desired process fluid temperature needed for your application. The Setpoint Loop is accessed by pressing the **mode** key, see next page.

SEtuP is the Setup Loop. The Setup Loop allows you to display and/or alter different parameters of the controller. The Setup Loop is accessed from the **SP** display by pressing the **mode** key.

diAg is the Diagnostic Loop. The Diagnostic Loop allows you to display the operating times for various components within the unit. The Diagnostic Loop is accessed from the **Setup** display by pressing the **mode** key, see Section VI for more details.

NOTE The loops can be accessed and changed without the unit running as long as the circuit protector is in the on (**I**) position. ▲

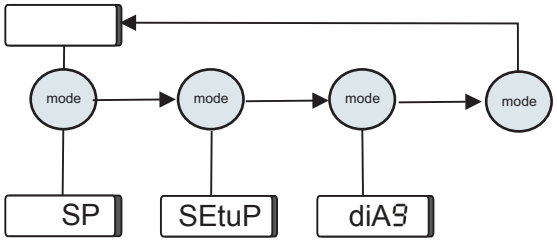

Figure 4-4 Controller Loops (Unit not running)

Setpoint Loop (SP)

- Ensure the controller is either a blank screen or displaying the process fluid temperature.
- Press the mode key and the controller display will alternate between **SP** and the setpoint value.
- If no change is required press the enter key to return the controller to the previous display.
- If a setpoint change is required, use the ▲▼ keys.

  The setpoint range is +5°C to +40°C (41°F to 104°F).

NOTE If the ▲▼ are not used within one minute the controller will time out and return to the previous display and any changes will not be accepted. ▲

- Once the desired value is displayed press the enter key to confirm the change.
- The controller will return to the process fluid temperature display or a blank screen.

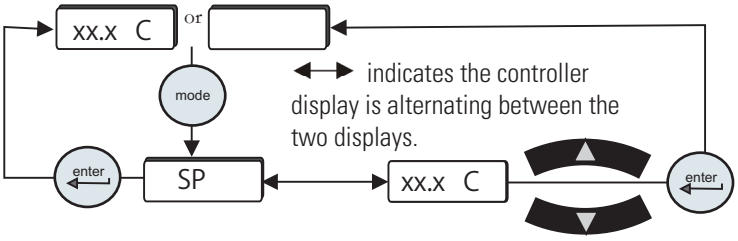

Figure 4-5 Setpoint Loop

Setup Loop (SEtuP)

Use the Setup Loop to adjust/verify the following controller settings.

- Scales: temperature in °C or °F, flow in liters per minute or gallons per minute (units with an optional flow transducer only), and pressure in PSI, bar or kPa
- High and low temperature alarm limits
- High and low pump discharge pressure alarm limits and time delays
- Fault reaction to a temperature, pressure or flow (optional) alarm limit (continue to run or shut down)
- Audible alarm enabled/disabled
- View/change the fan speed (ThermoFlex 2500 air-cooled units only)
- Auto restart feature enabled/disabled
- Preventive care cleaning frequency reminder for air and fluid filters

Optional Features:

- Global voltage
- Analog I/O
- Auto refill alarm
- DI filter cartridge preventive maintenance interval
- High/low flow alarm limits
- Serial communications
- Anti drainback valve position

- **Save or not save *all* changes**

To enter the Setup Loop ensure the controller display is either a blank screen (unit off) or displaying the process fluid temperature. Press the 

key and the display will indicate **SP**, press it again to display **SEtuP**.

Press the 

key to continue, or press 

twice to return to the process fluid temperature or blank display.

Use  to sequence down through the loop. Use  to sequence back through the loop up to the **Hi t** display, see next page.

To change any parameter:

- Press the 

key.
- Use the  keys to change a displayed value.
- Press 

key to confirm the change and bring up the next display.

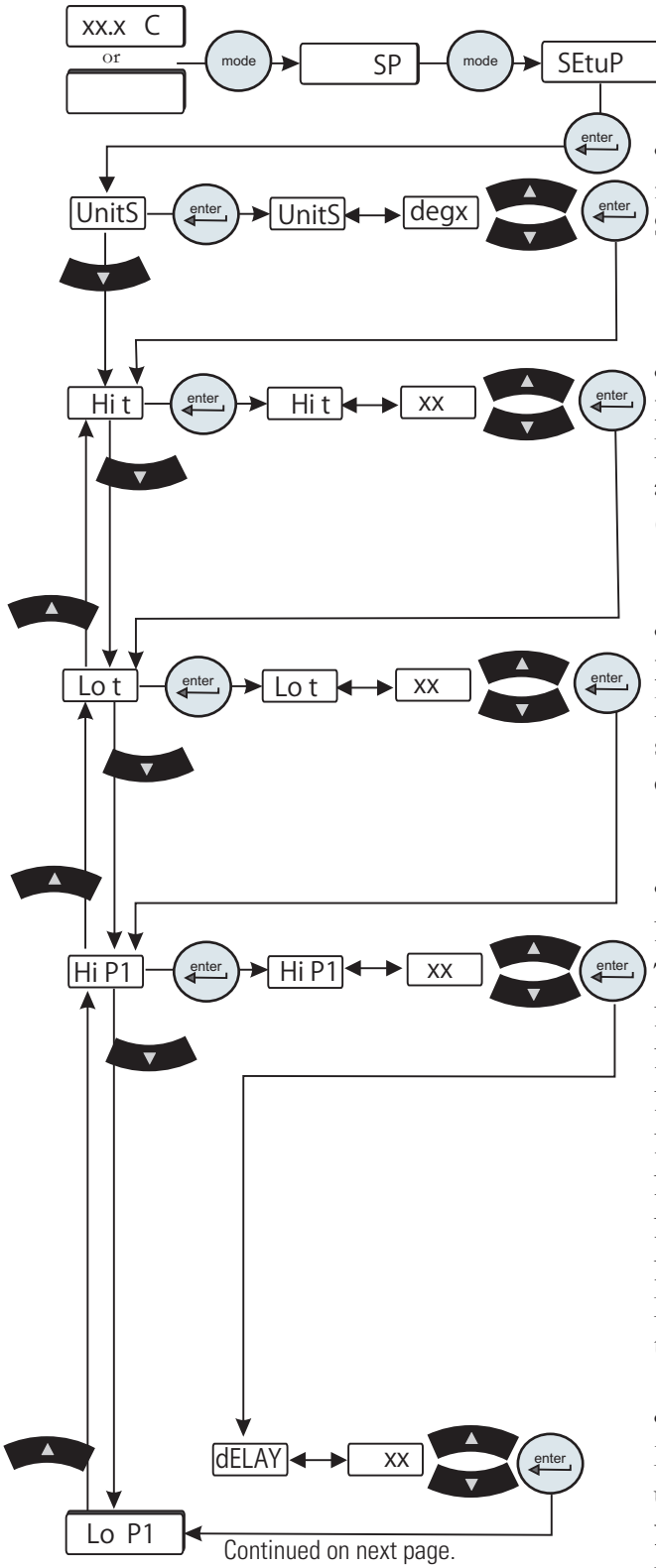

Figure 4-6 Setup Loop (All Units)

• **UnitS** are the temperature, fluid flow (units with an optional flow transducer only) and pressure display scales.

Scales: °C or °F	**Defaults:** °C
GPM or LPM	GPM
PSI, Bar or kPa	PSI

• **Hi t** is the fluid's High Temperature alarm limit.
Range: +3°C to +42°C **Default:** +42°C
Exceeding this limit flashes **Hi t** and, if enabled, sounds the alarm. The unit reaction depends on the alarm configuration (see **ALr** on next page).

• **Lo t** is the fluid's Low Temperature alarm limit.
Range: +3°C to +42°C **Default:** +3°C
Falling below this limit flashes **Lo t** and, if enabled, sounds the alarm. The unit reaction depends on the alarm configuration (see **ALr** on next page).

• **Hi P1** is the pump's High Pressure discharge alarm limit.

P1 Pump **Range:** 3 to 100 PSI	**Default:** 100 PSI
T1 Pump **Range:** 3 to 100 PSI	**Default:** 100 PSI
P2 Pump **Range:** 3 to 100 PSI	**Default:** 100 PSI
P3 Pump 60Hz **Range:** 3 to 48 PSI	**Default:** 48 PSI
P3 Pump 50Hz **Range:** 3 to 32 PSI	**Default:** 32 PSI
P4 Pump 60Hz **Range:** 3 to 85 PSI	**Default:** 85 PSI
P4 Pump 50Hz **Range:** 3 to 60 PSI	**Default:** 60 PSI
P5 Pump 60Hz **Range:** 3 to 87 PSI	**Default:** 87 PSI
P5 Pump 50Hz **Range:** 3 to 56 PSI	**Default:** 56 PSI

Exceeding this limit flashes **Hi P1** and, if enabled, sounds the alarm.

• **dELAY** is the length of time the pump can exceed the Hi P1 alarm limit. **NOTE** This feature is active only if the unit is configured to shut down with a pressure alarm. ▲
P1, **P2** and **T1 Range:** 0 to 30 seconds **Default:** 0 seconds
P3 - P5 Range: 0 to 60 seconds **Default:** 0 seconds
Exceeding this limit flashes **Hi P1** and, if enabled, sounds the alarm. The unit reaction depends on the alarm configuration (see **ALr** on next page).

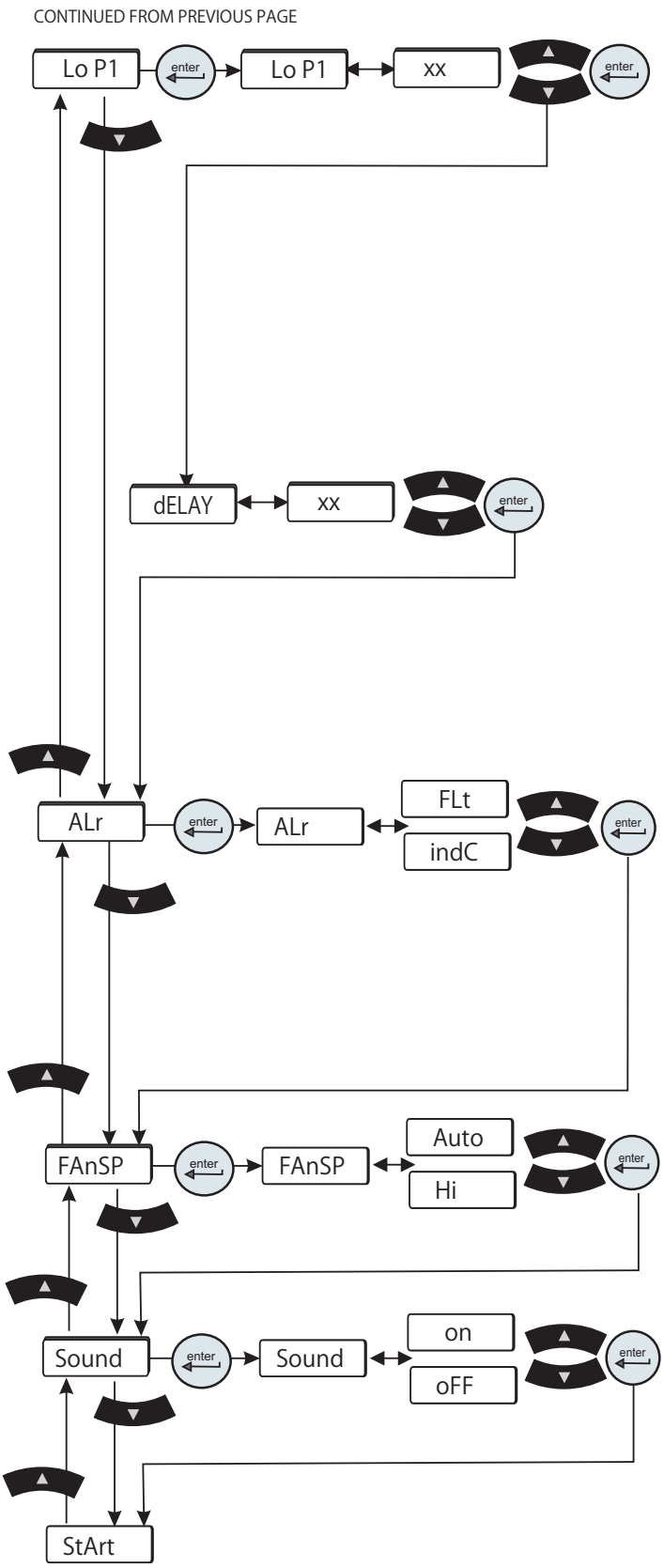

Figure 4-6 Setup Loop (All Units)

• **Lo P1** is the pump's Low Pressure discharge alarm limit.

P 1 Pump **Range:** 3 to 100 PSI **Default:** 4 PSI
T 1 Pump **Range:** 3 to 100 PSI **Default:** 4 PSI
P 2 Pump **Range:** 3 to 100 PSI **Default:** 4 PSI
P 3 Pump 60Hz **Range:** 3 to 48 PSI **Default:** 4 PSI
P 3 Pump 50Hz **Range:** 3 to 32 PSI **Default:** 4 PSI
P 4 Pump 60Hz **Range:** 3 to 85 PSI **Default:** 4 PSI
P 4 Pump 50Hz **Range:** 3 to 60 PSI **Default:** 4 PSI
P 5 Pump 60Hz **Range:** 3 to 87 PSI **Default:** 4 PSI
P 5 Pump 50Hz **Range:** 3 to 56 PSI **Default:** 4 PSI

Going below this limit flashes **Lo P1** and, if enabled, sounds the alarm.

• **dELAY** is the length of time the pump can exceed the Lo P1 alarm limit. **NOTE** This feature is active only if the unit is configured to shut down with a pressure alarm. ▲

Range: 0 to 30 seconds **Default:** 10 seconds

Exceeding this limit flashes **Lo P1** and, if enabled, sounds the alarm. The unit reaction depends on the **ALr** alarm configuration set below.

• **ALr** is used to configure the unit's reaction for exceeding an alarm limit (temperature, pressure and optional flow). The unit will either shut down (**FLt**) or continue to run (**indC**). In each configuration, the controller will display the error code and sound the audible alarm, if enabled.

Range: FLt or indC **Default:** FLt

• **FAnSP** is used to control the fan speed (air-cooled 2500 units only). **Auto** allows the fan to run under the conditions listed in Section 3. Selecting **Hi** allows the fan to run at high speed all the time. **NOTE Hi** is required for the unit to achieve its 2500 watt cooling capacity. ▲

Range: Auto or Hi **Default:** Auto

• **Sound** is used to enable/disable the audible alarm.

Range: on or oFF **Default:** on

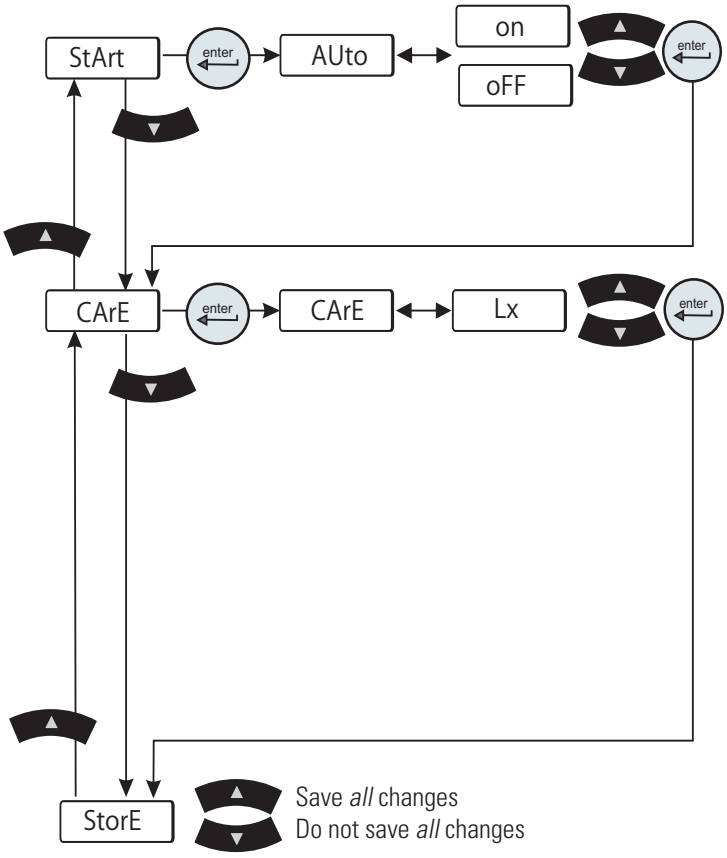

Figure 4-6 Setup Loop (All Units)

• **StArt** is used to enable/disable the auto restart function. When enabled the unit will automatically restart after a power failure or power interruption condition.

Range: on or oFF **Default:** oFF

• **CArE** is used to set the preventive care cleaning frequency reminder for the unit's air and fluid filters, in hours. The time selected is based on your operating environment, see Section 6.

Range: off **Default:** L1
L1 (1000 hours)
L2 (2000 hours)
L3 (3000 hours)

Off disables the reminder. Exceeding this limit flashes **FLtrS**, see Section 6.

NOTE If your unit is equipped with any of the **Optional Features** refer to the next page. ▲

When the display indicates **StorE** press ▲ to save *all* changes or press ▼ to not save *all* changes. The display will return either the process fluid temperature or, if the unit was off when you entered the loop, a blank screen.

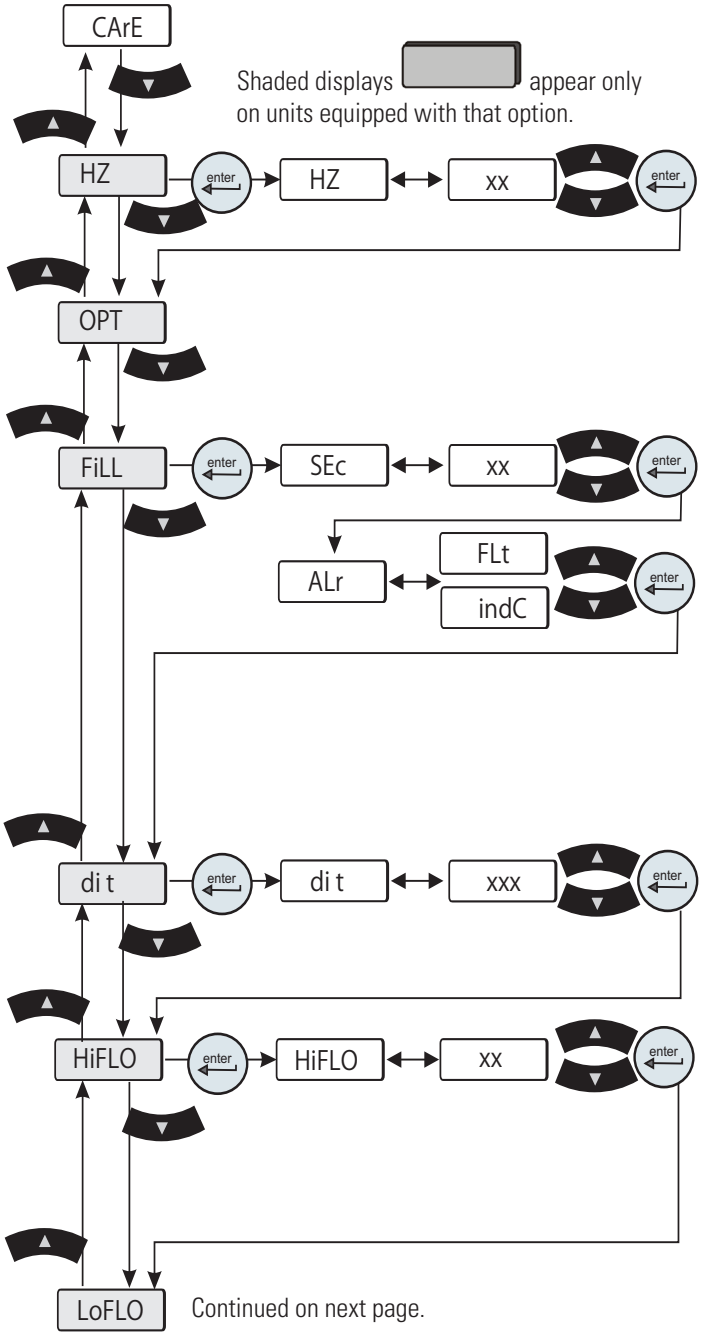

Figure 4-7 Setup Loop (Optional Features)

• **HZ** is used to identify the incoming frequency for units with P 3 - P 5 pumps *and* the capability to run on either 50 Hz or 60 Hz. The selected frequency automatically adjusts the firmware's *fixed* high pressure default setting.
Range: 50 Hz or 60 Hz **Default:** 60 Hz

• **OPt** is used to configure the analog in/out mode of operation. See Appendix C.

• **FiLL** is used to set the time limit the auto refill has for filling the unit's reservoir to the normal operating level.
Range: 0 to 900 seconds
Default: 45 seconds ThermoFlex900 - 5000
80 seconds ThermoFlex7500 - 10000
Exceeding the time limit flashes **rEFiL** and the auto refill will shut off. The unit's reaction depends on the alarm **ALr** setting, **Flt** is shut down, **indC** is continue to run.
NOTE Setting the time limit to 0 disables the auto refill option. ▲ See Section 5 for additional information.

• **di t** is used to set the preventive care cleaning frequency reminder for the unit's DI filter cartridge.
Range: 0 to 9999 hours **Default:** 448 hours
Exceeding the limit flashes **di**, see Section 6.

• **HiFLO** is used to set the high flow alarm limit.
P 1 Pump **Range:** 0.3 to 10.0 GPM **Default:** 5.0 GPM
T 1 Pump **Range:** 0.3 to 10.0 GPM **Default:** 5.0 GPM
P 2 Pump **Range:** 1.0 to 10.0 GPM **Default:** 5.0 GPM
P 3 Pump **Range:** 4.0 to 30.0 GPM **Default:** 15.0 GPM
P 4 Pump **Range:** 4.0 to 30.0 GPM **Default:** 20.0 GPM
P 5 Pump **Range:** 4.0 to 30.0 GPM **Default:** 25.0 GPM
Exceeding this limit flashes **HiFLO** and, if enabled, sounds the alarm. The unit's reaction depends on the alarm (**ALr**) setting.

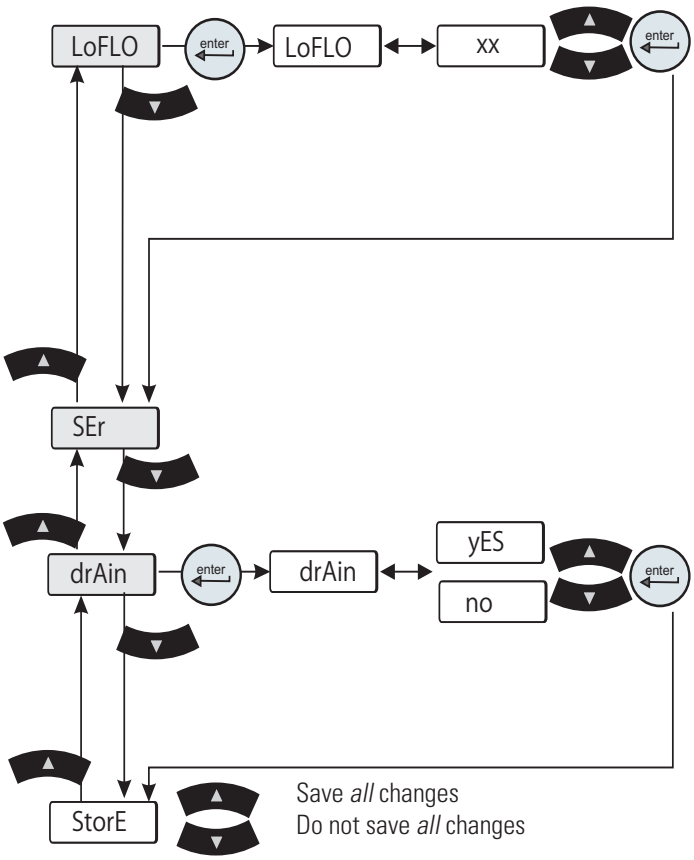

Figure 4-7 Setup Loop (Optional Features)

• **LoFLO** is used to set the low flow alarm limit.

P 1 Pump **Range:** 0.3 to 10.0 GPM **Default:** 0.3 GPM
T 1 Pump **Range:** 0.3 to 10.0 GPM **Default:** 0.3 GPM
P 2 Pump **Range:** 1.0 to 10.0 GPM **Default:** 1.0 GPM
P 3 Pump **Range:** 4.0 to 30.0 GPM **Default:** 4.0 GPM
P 4 Pump **Range:** 4.0 to 30.0 GPM **Default:** 4.0 GPM
P 5 Pump **Range:** 4.0 to 30.0 GPM **Default:** 4.0 GPM

Going below this limit flashes **LoFLO** and, if enabled, sounds the alarm. The unit's reaction depends on the alarm (**ALr**) setting.

• **SEr** is used to configure the serial communications mode of operation. See Appendix D.

• **drAin** is used to open and close the unit's anti drainback valve for draining, see Section 5.
Range: yes or no **Default:** no

NOTE The unit must be off to drain the valve. The valve automatically closes when you exit the **drAin** display. ▲

When the display indicates **StorE** press ▲ to save *all* changes or press ▼ to not save *all* changes. The display will return either the process fluid temperature or, if the unit was off when you entered the loop, a blank screen.

Shut Down

Press the  key on the controller.

NOTE To protect the unit's compressor, the unit will enter a 20 second shut down cycle before the refrigeration system and pump shut down. During this time the display will indicate OFF . The bars will scroll downward indicating the controller is in the shut down cycle. ▲

Using any other means to shut the unit down can reduce the life of the compressor.

When the display goes blank it is safe to place the circuit protector located on the rear of the unit to the off (**0**) position.



Always turn the unit off and disconnect it from its supply voltage before moving the unit. ▲



The circuit protector located on the rear of the unit is not intended to act as a disconnecting means. ▲

Section 5 Options/Accessories

Auto Refill

The Auto Refill provides makeup fluid to replace any fluid lost to evaporation, etc. It requires a pressurized fluid source connection to the ¼" Female Pipe Thread (FNPT) fitting on the rear of the unit. (If Teflon® tape is used, ensure the tape does not cover the connection's starting-end thread .)

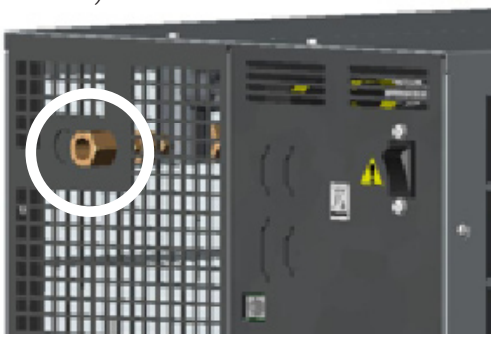

Figure 5-1 Auto Refill Fitting

The auto refill fluid must also meet water quality standards or the valve may fail to operate as designed, see Section 3.

The auto refill valve input pressure must be < 80 PSI to ensure the valve functions properly.

The auto refill operates when all of the following conditions are met:

- Fluid is available
- The unit is turned on
- The fluid reaches a low level condition.

The auto refill shuts off when:

- The fluid reaches the correct operating level.
- The delay timer exceeds user fill time entered in the Setup Loop, see Section 4. If **FLt** is selected in the Setup Loop the unit also shuts down. (If **indC** is selected the unit continues to run.) In either case the controller will display **rEFIL**.
- The unit shuts down for any reason.

Setting the fill time to 0 disables auto refill. If a low level condition occurs the unit will:

- If **Indc** is selected, continue to run and the controller displays **Add**.
- If **FLt** is selected, shut down and the controller displays **LLF**.

Internal DI Cartridge

A partial flow DI filter cartridge is designed to provide between 1 and 3 MΩ-cm water resistivity.

NOTE The DI option results in a 0.5 gpm reduction of available flow. ▲

Do not use a Deionization (DI) filter cartridge with Inhibited EG or Inhibited PG. A DI filter will remove inhibitors from the solution rendering the fluid ineffective against corrosion protection. Also, inhibitors increase fluid conductivity. ▲

The Puralite sensor on the back of the unit turns red when the cartridge needs changing (< 1 MΩ-cm), see Section 6. **NOTE** The Puralite sensor that comes with the DI cartridge requires a separate power source. ▲

Remove the two thumbscrews securing the DI access panel to the top of the unit. Remove the new cartridge from the shipping bag. The cartridge has a blue and a white connector. Lower the cartridge into the unit with the blue connector facing downward. Press down on the cartridge lightly to engage and then rotate it ¼ turn clockwise (do not over rotate) or until you feel the filter click into place.

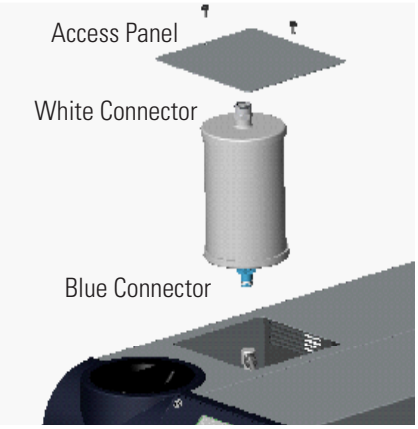

Figure 5-2 Internal DI Cartridge

If there is a cartridge in place, first undo the hose fitting by pressing on the quick disconnect located on the top white connection.

The DI Cartridge will overpressurize if it is removed from the unit before removing the hose fitting. ▲

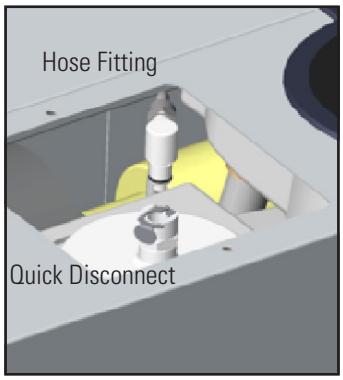

Figure 5-3 DI Fittings

Next rotate the cartridge ¼ turn counter-clockwise and then pull the cartridge straight up to remove it.

Push the hose fitting into the quick disconnect located on the white end of the cartridge.

Replace the access panel and thumbscrews.

NOTE The cartridge can be changed with the unit running, however, since the cartridge runs in a parallel arrangement, disconnecting the cartridge adds 0.5 gpm to the main flow. The additional flow will cause an increase in system pressure which may cause a high fluid pressure fault. ▲

P1 P2 T1 Pump Pressure Relief Valve (Internal Configuration)

Use the pressure relief valve, located on the top left rear of the unit, to set the desired system back pressure to your application. The valve is factory preset to 80 ± 5 psi (5.5 ± 0.4 bar).

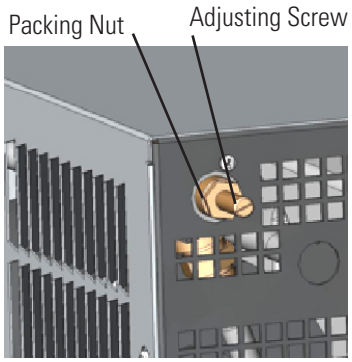

Figure 5-4 Nut and Screw

If the unit is not plumbed to an application, set the pressure by installing a loop of hose equipped with a shut-off valve between the supply and return fittings. Start the unit and allow it to prime, then close the valve.

Use the controller's  to display P1, it should display 80 ± 5 psi.

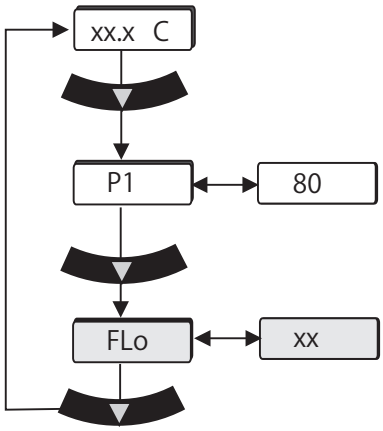

Figure 5-5 Main Loop

Use a screwdriver to turn the adjusting screw (counterclockwise to reduce pressure) until the controller displays the desired setting.



NOTE Due to internal back pressure, the minimum pressure setting for a deadheaded P2 pump is 32 psi (2.2 bar), and 8 psi (0.6 bar) for a P1 (these settings prohibit external flow from the unit). ▲

If the unit is plumbed to an application, ensure the unit is off. Then back out the adjusting screw counterclockwise to reduce pressure. Turn the unit on. Ensure that there is back pressure in the system. Turn the adjusting screw until the controller displays the desired setting.

Do not exceed 100 psi (6.9 bar). ▲

When complete, inspect the area around the $^{5}/_{8}$" packing nut for fluid leaks. If fluid is present, slightly tighten the nut and reinspect.

NOTE Should the unit start to vibrate the valve setting may be the cause. Changing the pressure setting ± 5 psi (0.3 bar) will eliminate the vibration. ▲

P1 P2 T1 Pump Pressure Relief Valve (External Con-

Use the pressure relief valve to set the desired system back pressure (P1) to your application. The valve is factory preset to 80 ± 5 psi (5.5 ± 0.4 bar).

The valve's inlet/outlet connections are ½"FNPT.

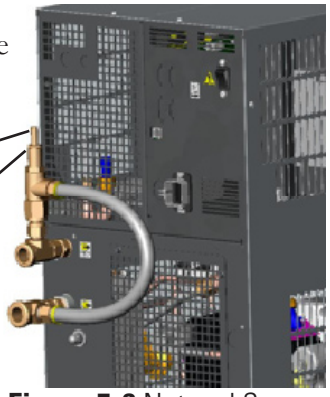

Figure 5-6 Nut and Screw

If the unit is not plumbed to an application, set the pressure by installing a loop of hose equipped with a shut-off valve between the supply and return fittings. Start the unit and allow it to prime, then close the valve.

Use the controller's  to display P1, it should display 80 ± 5 psi.

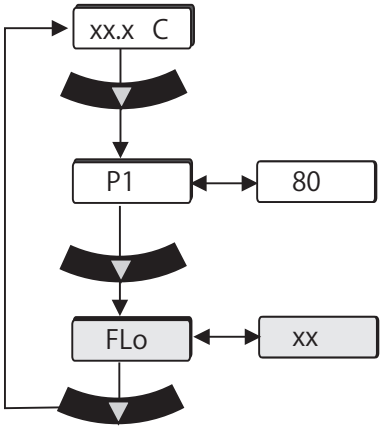

Figure 5-7 Main Loop

Use a screwdriver to turn the adjusting screw (counterclockwise to reduce pressure) until the controller displays the desired setting.



NOTE Due to internal back pressure, the minimum pressure setting for a deadheaded P2 pump is 40 psi (2.8 bar), and 22 psi (1.5 bar) for a P1 (these settings prohibit external flow from the unit). ▲

If the unit is plumbed to an application, ensure the unit is off. Then back out the adjusting screw counterclockwise to reduce pressure. Turn the unit on. Ensure that there is back pressure in the system. Turn the adjusting screw until the controller displays the desired setting.

Do not exceed 100 psi (6.9 bar). ▲

When complete, inspect the area around the $^{5}/_{8}$" packing nut for fluid leaks. If fluid is present, slightly tighten the nut and reinspect.

Flow Control with Flow Readout

Flow control for P1 and P2 pumps on ThermoFlex900 - 5000 units is achieved using a 3-way valve plumbed between the standard process outlet and the process inlet on the rear of the unit. Use the auxiliary process outlet at the top left of the rear of the unit as a connection point. The connections are ½" FNPT. See Figure 5-8.

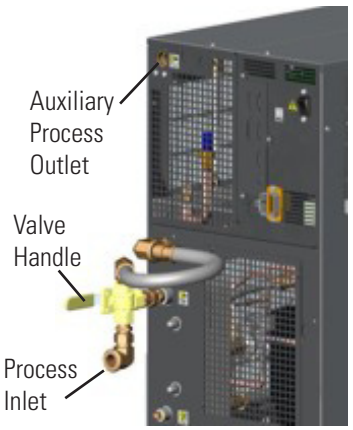

Figure 5-8 P1 P2 Flow Control

ThermoFlex3500 and 5000 units with P3 and P4 pumps use a 2-way valve located on the rear of the unit. The connections are 3/4" FNPT. See Figure 5-9.

ThermoFlex7500 and 10000 units with P2 - P5 pumps use a valve located on the rear of the unit. The connections are 1/2" for P2, 1" FNPT for P3 and P5. See Figure 5-9.

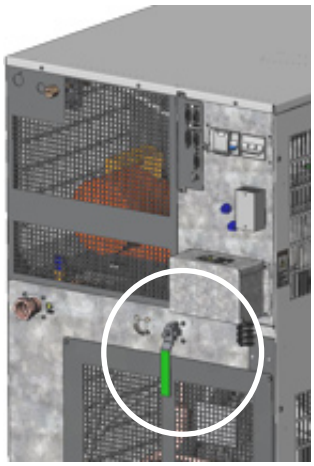

Figure 5-9 Flow Control Handle (Typical)

Press the controller's down arrow twice to display the controller's FLo display, see previous page. Turn the valve handle until the desired rate is displayed.

NOTE The valve is sensitive to slight adjustments. ▲

P1 P2 T1 Pump Pressure Relief with Flow Readout

The Pressure Relief with Flow Readout works just like the Pressure Relief Valve discussed on the previous page. It allows you to control the pressure going to your application.

This valve is plumbed between the standard process outlet and the process inlet on the rear of the unit. Use the auxiliary process outlet at the top left of the rear of the unit as a connection point, allowing you to also monitor the flow rate to your application using the controller's FLo display, see previous page.

The valve's outlet connection is ½" FNPT. See Figure 5-10.

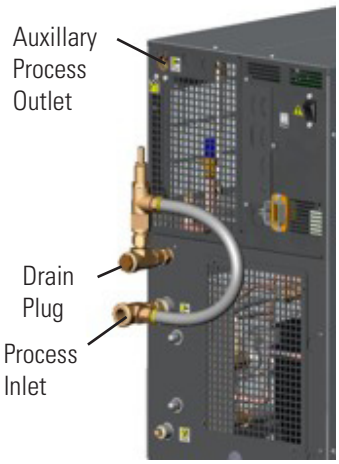

Figure 5-10 Pressure Relief

Anti Drainback

Units installed below the end-user application may allow system fluid to drain back into the chiller and cause spillage. The anti-drainback valve is designed to prevent any such spillage.

The valve opens just before the pump is turned on and it closes just after the pump shuts off.

This option is required if your unit is more than 24 feet below your application, or if there is a possibility of drain back due to the occasional opening of the process lines for either application swaps or unit servicing.

Semiconductor Equipment and Materials International (SEMI) Units

Compliance

SEMI units are compliant with:

SEMI S2-0703 Product Safety Assessment

SEMI S8-0705 Ergonomic Assessment

SEMI S14-0704 Fire Risk Assessment

SEMI F47-0706

Emergency Off (EMO)

A guarded red mushroom shaped push-button switch with twist-to-reset is provided on the unit's front to turn it off in case of an emergency. The button head is engraved with "EMO" in large white filled letters.

NOTE The EMO is controlled by a safety circuit and is not influenced by the unit's firmware/software. ▲

Activation of the EMO button will remove power from the main contactor coil stopping operation of the unit. The controller will display **Er 48**.

Resetting the EMO button will not restart the unit. After all hazards have been removed reset the unit by pushing the enter key on the controller. In the local mode, the unit will restart by pressing the START STOP button again. In the serial communications mode, send the appropriate start command. In the analog I/O mode, the unit starts when the error is cleared.

Unit Circuit Breaker Interrupt Rating

The main power circuit breaker located on the rear of the unit has an Interrupting Capacity (AIC) of 10,000 amps.

Lockout/Tagout (LOTO)
Before performing Chiller maintenance, the energy sources associated with the Chiller system must be lockedout and tagged out (LOTO). Hazard control features added to the system (e.g., safety interlocks, EMO) are not a substitute for turning off and locking out electrical or fluid energy.

For units rated 20 Amps or less, electrical LOTO is accomplished by removing the power cord on the rear of the unit then closing and locking the power receptacle locking device. For other units, electrical LOTO is the responsibility of the user and can be provided by:

- Using the main disconnect (knife switch at system control cabinet).
- Disconnecting main power at the facility power source prior to the system controller cabinet.
- In addition, follow all OSHA and local facility LOTO directives.

Drip Pan and Drain
The unit is equipped with a secondary containment (drip pan) in case there is a leak. The drip pan drain is located on the rear of the unit. Install the supplied nylon 1/4 turn quick disconnect (QD) fitting into the drain fitting. The QD is barbed for a 1/2" ID hose.

Since the drip pan will not hold more than 110% of the reservoir volume, connect the drain to guide the fluid to an appropriate spillage location.

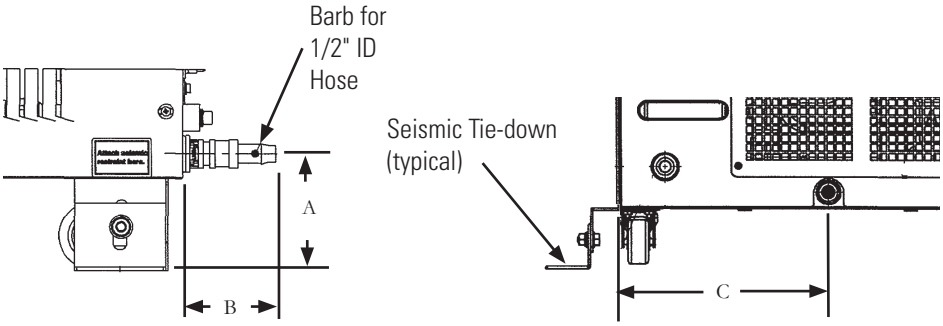

1/4 Turn Quick Disconnect Drip Pan Drain Fitting

Figure 5-11 Drip Pan Drain

	900/1400		2500		3500/5000		7500/10000	
A	3 1/2"	8.8 cm	4"	10.1 cm	3 3/8"	11.3 cm	4 1/4"	10.8 cm
B	2 3/4"	7.0 cm	2 11/16"	6.8 cm	2 3/4"	7.1 cm	2 5/8"	6.6 cm
C	6 15/16"	17.7 cm	6 9/16"	16.7 cm	9 9/16"	24.3 cm	7 11/16"	19.5 cm

Seismic Tie-Downs

Install the seismic tie-downs to the unit as shown below. Then secure the unit to the floor with user-supplied hardware.

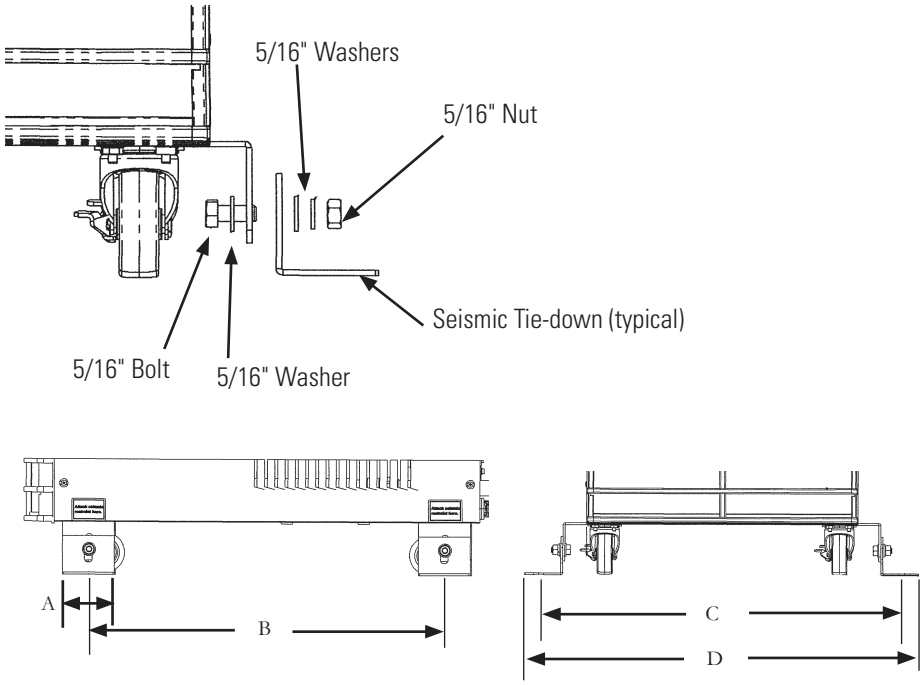

Figure 5-12 Seismic Tie-Downs

	900/1400		2500		3500/5000		7500/10000	
A	2 11/16"	6.8 cm	2 11/16"	6.8 cm	2 11/16"	6.8 cm	2"	5.1 cm
B*	18 ½ "	47.0 cm	20 1/16"	51.0 cm	24 ½"	62.2 cm	17"	43.1 cm
C*	19 1/16"	48.4 cm	22 1/16"	56.1 cm	24 1/8"	61.3 cm	27 7/16"	69.6
D	20 9/16"	52.2 cm	23 1/16"	59.9 cm	25 5/8"	65.1 cm	28 15/16"	73.4

* Distance between Ø.53 Seismic mounting holes

Center of Gravity ± ½", P2 pump (P3 for 7500/10000), air-cooled unit, no fluid in tank

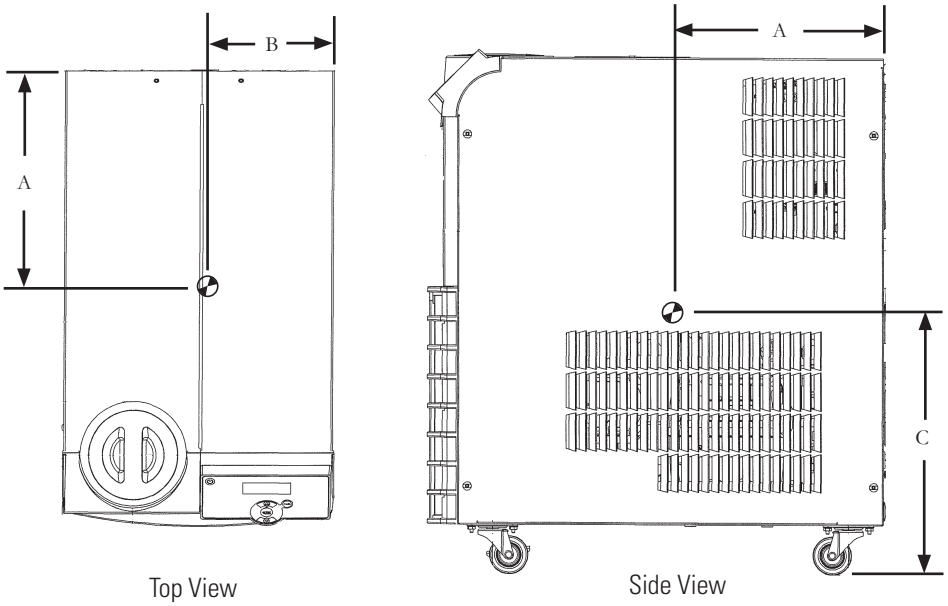

Figure 5-13 Center of Gravity

	900/1400		2500		3500/5000		7500/10000	
A	10 3/4"	27.3 cm	12"	30.5 cm	13 3/8"	34.0 cm	14 7/8"	37.8 cm
B	6 3/4"	17.2 cm	8 3/8"	21.3 cm	9"	22.9 cm	12 5/8"	32.1 cm
C	13 1/2"	34.3 cm	13 1/2"	34.3 cm	16"	40.6 cm	25 1/4"	64.1 cm

Weight Distribution

	900/1400		2500		3500/5000		7500/10000	
Left Front	29.5 lbs	13.4 kg	42.8 lbs	19.5 kg	56.6 lbs	25.7 kg	99.3 lbs	45.0 kg
Left Rear	28.8 lbs	13.1 kg	43.6 lbs	19.8 kg	66.4 lbs	30.1 kg	101.9 lbs	46.2 kg
Right Front	34.3 lbs	15.6 kg	46.9 lbs	21.3 kg	64.9 lbs	29.4 kg	98.2 lbs	44.5 kg
Right Rear	33.4 lbs	15.1 kg	47.7 lbs	21.6 kg	76.1 lbs	34.6 kg	100.7 lbs	45.7 kg

Other Accessories

Installation kit - includes replacement air and fluid filters

Maintenance kit - includes a set of hoses, adaptor fittings and Teflon® tape

Fluids

Fluid treatment kit

Please contact Thermo Fisher Scientific's Sales, Service and Customer Support to assist you with questions that you may have regarding accessories for your ThermoFlex, see inside front cover for contact information.

Section 6 Preventive Maintenance

Preventive Maintenance Timer (CAr-E)

The ThermoFlex chiller has an integrated preventive maintenance timer that will alert you when it is time to perform preventive maintenance. This unique feature will remind you to change your air and fluid filters.

Based on the environment in which your chiller is located, you can choose from four levels of preventive maintenance off, L1, L2, and L3:

- off – Disables the alert
- L1 – 1,000 hours - default setting
  - · Heavy manufacturing environment
  - · Airborne particulate created during manufacturing process
- L2 – 2,000 hours
  - · Typical production environment
- L3 – 3,000 hours
  - · Clean environment – filtered air
  - · Typically laboratory or research environment

Change/set the level using the Setup Loop, see Section 4. When the unit exceeds the chosen limit, the controller will flash Chng↔FLtS and, if enabled, an audible alarm will sound.

To clear this message press 

. This will automatically restart the preventive maintenance timer for your filters. Each time the unit exceeds the chosen time, the controller will remind you that it is time to change your filters.

If you change your filters before the preventive timer trips, you can clear the timer by using the Diagnostic Loop explained in this section.

NOTE For air-cooled units, both the air and fluid filters in the ThermoFlex can be changed while the unit is running. For water-cooled units, only the fluid filter can be changed while the unit is running. ▲

Fluid Filter Bag

The reservoir has a fluid bag filter designed to prevent the introduction of particulates into the system. Units are shipped with a bag filter in place.

NOTE The fluid bag filter can be removed with the unit operating. ▲

Before using any fluid or performing maintenance where contact with the fluid is likely refer to the manufacturer's MSDS for handling precautions. ▲

When it is time to replace the bag, gently pull up on the plastic funnel housing to remove it and simply pull the bag out of the unit. Replacement bags are available from Thermo Fisher Scientific.

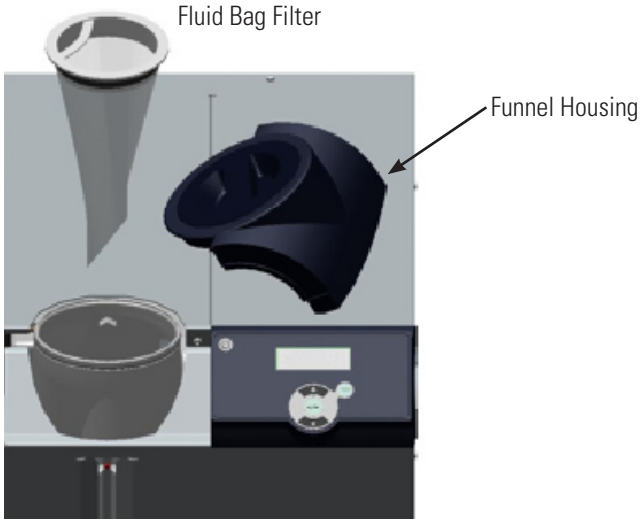

Figure 6-1 Fluid Filter Bag

Fluid Diffuser

On ThermoFlex900-5000 units, when you remove the bag you will notice a wire mesh fluid diffuser inside the reservoir supply line, see Figure 6-2. The diffuser is used to help streamline the flow into the reservoir. After several bag replacements turn the unit off and remove the diffuser to inspect it for debris/damage.

The fluid velocity into the reservoir will rapidly increase with the diffuser removed and cause splashing. Turn the unit off before removing the diffuser. This is especially critical when using ethylene or propylene glycol. ▲

NOTE To prevent particulates from entering the reservoir, ensure the fluid bag filter is in place before removing the diffuser. ▲

Do not operate the unit unless the diffuser is installed. ▲

Reservoir Cleaning

The user is responsible for maintaining reservoir fluid quality. Check the fluid on a regular interval. Start with frequent checks until a regular interval (based on your application) is established.

If cleaning is necessary, flush the reservoir with a fluid compatible with the process fluid and the unit's wetted parts, see Section 8.

Before using any fluid or performing maintenance where contact with the fluid is likely refer to the manufacturer's MSDS for handling precautions. ▲

Reservoir Sight Tube

Clean the sight tube by gently pulling up on the plastic funnel housing to remove it (see illustration on previous page) and then gently pulling out the black sight ball stopper from the tube. Use a long soft-bristle ¼" brush. Use caution not to scratch the glass.

For easier replacement, wet the stopper first and then use a twisting motion to install it in the sight tube.

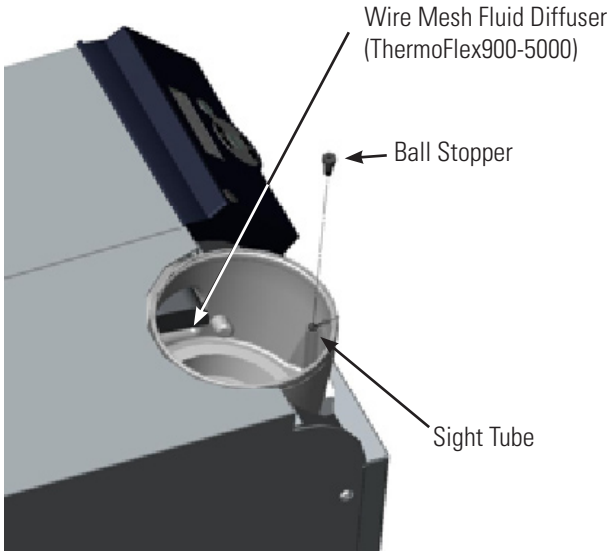

Figure 6-2 Reservoir Cleaning and Diffuser

Condenser Filter

Failure to clean/replace the condenser filter will cause a loss of cooling capacity and lead to premature failure of the cooling system. ▲

ThermoFlex900 - 5000
Clean the filter through the grill using a vacuum with a soft-bristle brush.

When it is time for a more thorough cleaning, remove the one-piece grill assembly by first pulling the bottom of the assembly away from the unit and then pulling it away from the top.

The condenser framing and fins located behind the grill assembly are very sharp. Use caution when removing the assembly. ▲

NOTE ThermoFlex900 - 5000 water-cooled units have an embedded screw(s) located at the top (and bottom) of the grill securing it to the unit. Loosen the screw(s) to remove the grill. ▲

Water-cooled units also have a fan with sharp blades, ensure the unit is off before removing the assembly. ▲

Shake off as much of the excess water as possible before reinstalling. Press the grill back into place.

For water-cooled units, tighten the screw(s) at the top (and bottom) of the grill.

Replacement grill assemblies are available from Thermo Fisher.

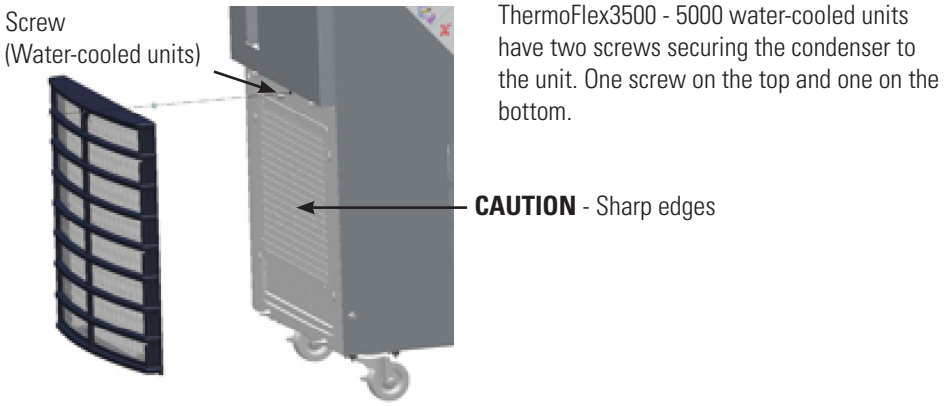

Figure 6-3 ThermoFlex900 - 5000 Condenser Grill Removal

ThermoFlex7500 - 10000
For air-cooled units, remove the one-piece grill assembly by pulling the assembly away from the unit.

Water-cooled units do not have a filter.

The filter goes over four studs and plastic "fast nuts" hold it in place.

Replace it or vacuum the old filter with a soft-bristle brush, or wash it. Shake off as much of the excess water as possible before reinstalling.

Tuck the filter around the perimeter of the grill and over the four studs, use the plastic "fast nuts" to hold it in place.

Replacement grills are available from Thermo Fisher.

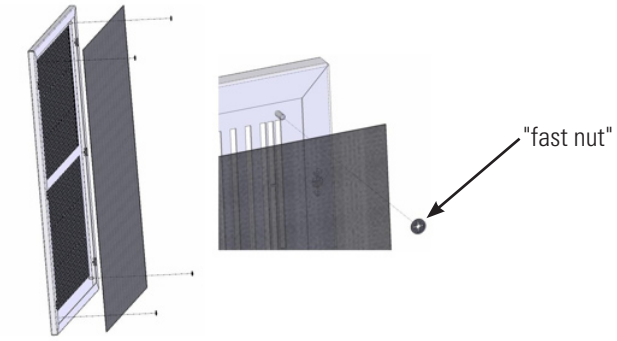

Figure 6-4 Filter Removal/Replacement ThermoFlex7500 - 10000 Air-Cooled

DI Filter (Optional)

Establish a preventive maintenance schedule for the DI filter cartridge based on your specific application.

The Puralite sensor located on the back of your chiller will illuminate red when it is time to change the DI filter cartridge (< 1 MΩ-cm).

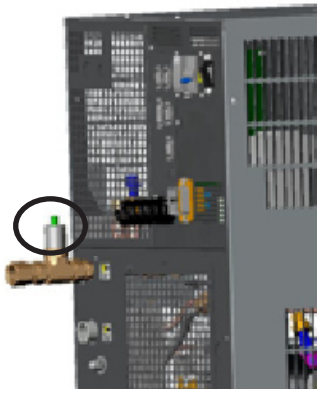

Figure 6-5 Puralite

NOTE When the unit is initially powered, or has been sitting idle for a period of time, the sensor may illuminate. The length of time it will be on varies with your application. ▲

Although the Puralite sensor is the primary indicator that the cartridge needs changing, the unit also has a *separate* integrated alarm that works independently of the Puralite. The alarm is based on unit run hours that will alert you when it is time to change your filter. The **di t** alarm is enabled using the Setup Loop, see Section 4.

If you already know how often your DI filter needs changing, you can input the number of hours into the Setup Loop's **di t** display. When the time is reached, the controller will flash **di** and the audible alarm, if enabled, will sound.

When alerted, check the Puralite sensor on the back of the unit to see if it is illuminated. If it is not illuminated reset the **di t** timer and then check the Puralite periodically.

To clear this message and stop the audible alarm press enter .

If the Puralite has turned red and the controller alarm has not gone off, access the Diagnostic Loop **di** display, see next page. Check the system run hours, this will give you an accurate DI replacement time. Adjust the **di t** filter alarm to match the time needed between filter cartridge changes.

This will automatically restart the preventive maintenance timer for your DI filter. If you change the filter before the preventive maintenance timer alerts you, you can clear the timer by again accessing the Diagnostic Loop **di** display, see next page.

NOTE It may be necessary to monitor the Puralite three or four times to establish an accurate changing schedule. Also, filter operating time is reduced every time new fluid is added. ▲

Diagnostic Loop (d iAG)

The Diagnostic Loop is used to view or reset the operating times of various unit components.

To enter the Diagnostic Loop ensure the controller display is either a blank screen (unit off) or displaying the process fluid temperature.

Press the mode key and the display will indicate **SP**, press mode again to display **SEtuP**, press mode again to display d iAG.

Press enter to enter the loop or press mode to return to the process fluid temperature or blank display.

Use the key to sequence down through the loop. Use the key to sequence up through the loop.

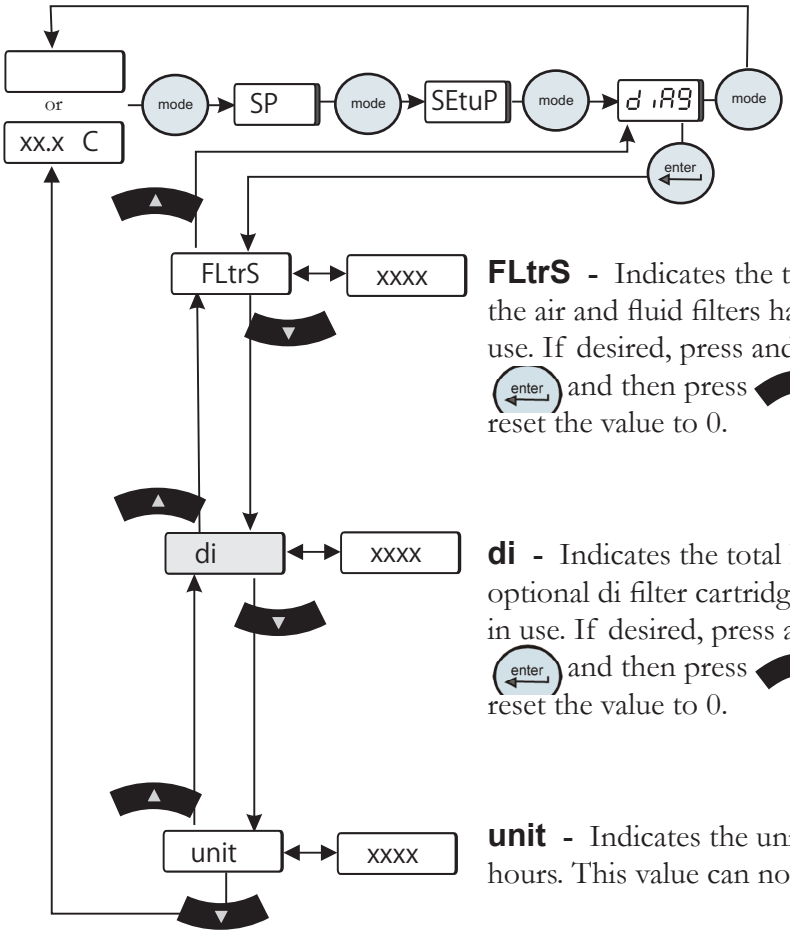

FLtrS - Indicates the total hours the air and fluid filters have been in use. If desired, press and hold enter and then press to reset the value to 0.

di - Indicates the total hours the optional di filter cartridge has been in use. If desired, press and hold enter and then press to reset the value to 0.

unit - Indicates the unit operating hours. This value can not be reset.

Figure 6-6 Diagnostic Loop

Section 7 Troubleshooting

Error Codes

The controller can display Error Codes. If the unit is still running press **enter** to see if the code clears, a limit may have been only temporarily exceeded. If the unit shut down, the controller will continue to flash the error code. Press **enter** to clear the display and silence any alarm. You can silence the alarm without clearing the code by pressing either the up or down arrow key. Once the cause of the shut down is identified and corrected, start the unit. If the cause was not corrected the error code will reappear.

Error Code	Reaction	Cause	Actions
8888 (or blank-screen)	Unit will not start.	Software communication error.	•Cycle circuit protector on the rear of the unit •Contact our Sales, Service and Customer Support.
Add	Unit continues to run. Auto refill, if installed, shuts off.	The auto refill time chosen for the customer adjustable *fill* setting in the Setup Loop is set to 0 and the unit is configured to keep running, see Section 4.	•Check for leaks. •Check **rEFil** settings and adjust if necessary, see Section 4. •Add fluid to the tank. •Contact our Sales, Service and Customer Support.
di	Unit continues to run. (Optional display)	The unit operating time exceeded Setup Loop di t alarm value. The optional DI cartridge *may* need replacing.	•Check the Puralite sensor on the rear of the unit, if the light is red change the cartridge. See Section 6. •If the Puralite sensor is green, see Section 4 to revise **di t** alarm value.
driP	Unit will shut down. (Optional display)	Fluid in drip pan (SEMI units only).	•Check for leaks. •Remove the fluid from the drip pan and reset the fault. •Contact our Sales, Service and Customer Support.
FLtrS	Unit continues to run.	Air and fluid filters require preventive maintenance/replacement.	•Check air and fluid filters. If required, clean/change air and fluid filters, see Section 6. •If your filters do not need cleaning, you may increase the number of hours between preventive care reminders. There are four levels, see Section 6.

Error Code	Reaction	Cause	Actions
HiFLo	Unit reaction depends on **ALr** setting chosen in the Setup Loop, see Section 4. (Units equipped with a flow transducer.)	The process fluid flow rate has exceeded the adjustable high flow setting's value.	•If the unit is still running press enter to see if the code clears, the limit may have been only temporarily exceeded. •Verify your **HiFLo** setting, see Section 4, and adjust setting if necessary. •Check all application and plumbing shut off valves for correct position. •Adjust flow if unit is equipped with a flow control valve (option), see Section 5. •If flow transducer was recently calibrated double check calibration, see Section 8. •Contact our Sales, Service and Customer Support.
Hi P1	Unit reaction depends on **ALr** setting chosen in the Setup Loop, see Section 4.	The pump's high discharge pressure exceeded Setup Loop high alarm value.	•If the unit is still running press enter to see if the code clears, the limit may have been only temporarily exceeded. •Verify your **Hi P1** setting, see Section 4. •Check application valves and ensure that they have not changed or been closed. **NOTE** If routine shut-off of the process flow is required then an external pressure relief valve should be added, see Section 5. ▲ •May occur as a result of changing the internal DI cartridge. Disconnecting the cartridge adds an additional 0.5 gpm to the main flow. See Section 5. •Check for debris in the application or external filters. •Double check fluid lines. Excessive bends, long tubing and diameter reductions can affect the pump's discharge pressure. **NOTE** If diameter reductions must be made, they should be made at the inlet and outlet of your application, not at the chiller. ▲ •Contact our Sales, Service and Customer Support.

Error Code	Reaction	Cause	Actions
Hi t	Unit reaction depends on **ALr** setting chosen in the Setup Loop, see Section 4. **NOTE** If the unit does shut down it can be restarted provided the temperature is still within the factory-set high fixed temperature limit. However, the error will reoccur if the temperature goes below the adjustable setting and then again exceeds it. ▲	The process fluid temperature exceeded Setup Loop alarm value.	•If the unit is still running press enter to see if the code clears, the limit may have been only temporarily exceeded. •Verify your **Hi t** setting, see Section 4. •Ensure the unit meets all environmental requirements, see Section 3. •Ensure unit has adequate ventilation, see Section 3. •Clean the air filter. Dirt and debris on the filter can prevent the unit from functioning at full capacity, see Section 6. •Ensure that the heat load being applied to the chiller is not too high. Contact Thermo Fisher for assistance on calculating heat loads. •Bring cooler air in from another area or exhaust the hot air into another location using an auxiliary fan. •Verify/adjust controller PID values, see the end of this section. •Contact our Sales, Service and Customer Support.
HPC	Unit will shut down.	High refrigeration pressure.	**Air-cooled units** •Ensure that the ambient temperature is not exceeding the recommended range, see Section 3. •Ensure unit has adequate ventilation, see Section 3. •Clean the air filter. Dirt and debris on the filter can prevent the filter from functioning at full capacity, see Section 6. •Bring cooler air in from another area or exhaust the hot air into another location using an auxiliary fan. •Contact our Sales, Service and Customer Support. **Water-cooled units** •Ensure the plastic plugs were removed from the facility connections. •Ensure facility water is on and connected. •Check facility water flow rate and pressure. •Contact our Sales, Service and Customer Support.

Error Code	Reaction	Cause	Actions
LLF	Unit will shut down. Optional auto refill shuts down.	Reservoir fluid level too low for normal operation. The auto refill time chosen for the customer adjustable *fill* setting in the Setup Loop is set to 0 and the unit is configured to shut down, see Section 4	•Excessive evaporation. Ensure the unit is operating with the funnel and cap in place. •Check for leaks. •Check **rEFil** settings and adjust if necessary, see Section 4. •Add fluid to the tank. •Contact our Sales, Service and Customer Support.
LoFLo	Unit reaction depends on **ALr** setting chosen in the Setup Loop, see Section 4. (Units equipped with a flow transducer.)	The process fluid flow rate has gone below the adjustable setting's value.	•If the unit is still running press enter to see if the code clears, the limit may have been only temporarily exceeded. •Verify your **LoFLo** setting, see Section 4. •Adjust flow if unit is equipped with a flow control valve (option), see Section 5. •Check all valves in your application and plumbing lines to ensure that they have not changed or closed. •If flow transducer has recently been calibrated, double check calibration to ensure it was done properly, see Section 8. •Contact our Sales, Service and Customer Support.
Lo P1	Unit reaction depends on **ALr** setting chosen in the Setup Loop, see Section 4.	Pump's low discharge pressure is below Setup Loop low alarm value.	•If the unit is still running press enter to see if the code clears, the limit may have been only temporarily exceeded. •Ensure that chiller reservoir level is not too low. •Verify your **LoP1** setting, see Section 4. •Unit requires >3 PSIG application pressure drop. If a bypass valve has been installed, some restriction may need to be added to the bypass line. •Contact our Sales, Service and Customer Support.

Error Code	Reaction	Cause	Actions
Lo t	Unit reaction depends on **ALr** setting chosen in the Setup Loop, see Section 4. **NOTE** If the unit does shut down it can be restarted provided the temperature is still above the factory-set low fixed temperature limit. However, the error will reoccur if the temperature goes above the adjustable setting and then again drops below it. ▲	Process fluid temperature is below Setup Loop alarm value.	• If the unit is still running press enter to see if the code clears, the limit may have been only temporarily exceeded. •Verify your **Lo t** setting, see Section 4. •Ensure that the ambient temperature is not below the recommended low-range, see Section 3. If your application load is constant and/ or the lower temperature can be temporarily tolerated, then continue operation. (The ThermoFlex will control setpoint when sufficient heat is added.) •Verify/adjust controller PID values. •Add insulation to external plumbing lines to reduce the heat-loss to the environment. •For water-cooled units check facility water temperature. •Contact our Sales, Service and Customer Support.
o FLo	Unit will shut down.	There is an overflow condition in the reservoir.	•Ensure the reservoir was not filled above the MAX LEVEL line. •Check for clogged reservoir filter. •Contact our Sales, Service and Customer Support.
oL	Unit will shut down. (Units equipped with 3-Φ pump motor overload.)	Pump motor overload activated. Pump motor exposed to excessive current due to high pressure, flow or ambient temperature.	•Allow pump to cool down. •Contact our Sales, Service and Customer Support.
oL 2	Unit will shut down. (Units equipped with 3-Φ fan.)	Fan motor overload activated.	•Allow unit to cool down. •For air-cooled units, clean the air filter •Contact our Sales, Service and Customer Support.
PHEr	Unit will shut down. (3-Φ units only)	Phase rotation is wrong.	•Disconnect unit from power source and reverse any two line conductors on the line side of the main circuit breaker. •Contact our Sales, Service and Customer Support.

Error Code	Reaction	Cause	Actions
rEFiL	Auto refill will shut off. Unit reaction depends on **ALr** setting chosen in the Setup Loop, see Section 4. Auto refill will shut off. Unit will continue to run. (Optional display.)	The fluid level did not reach the minimum operating level within the time chosen for the customer adjustable *fill* setting, chosen in the Setup Loop, see Section 4. The auto refill successfully filled within the time frame chosen for the customer adjustable *fill* setting, but the unit tried to refill 5 times in 40 hours.	•Check auto refill connection. •Check for leaks. •Check the supply pressure on the auto refill supply line. With low pressure the auto refill time span setting may be set too low and the reservoir does not have time to fill. •Check **rEFil** settings and adjust if necessary, see Section 4. •Contact our Sales, Service and Customer Support.
SEr X (x = 1 to 6)	Unit will continue to run.	Preventive maintenance reminder.	•Perform preventive maintenance, see Section 6. **NOTE** The reminder is based on component operating time. ▲ •Contact our Sales, Service and Customer Support.
Er 4	Unit will not start.	Normal if new software installed and all values in the Setup and Tune Loops were reset to factory defaults.	•Clear the error code. •If error remains, contact our Sales, Service and Customer Support.
Er 15	Unit will continue to run. (Units equipped with serial communications.)	Bad, communications connection.	•Check the serial communication connection. •See serial communication connections in Appendix D. •Contact our Sales, Service and Customer Support.
Er 16	Unit continues to run.	Bad sensor calibration detected several seconds after performing a calibration.	•Redo calibration, see Section 8. •Contact our Sales, Service and Customer Support.

Error Code	Reaction	Cause	Actions
Er 22	This error code has priority over **H iT**. Unit will shut down. **NOTE** Unit will not restart until process fluid temperature is below +43°C. ▲	Reservoir fluid temperature exceeded the *factory preset* value of +43°C.	•Ensure the unit meets all environmental requirements, see Section 3. •Ensure unit has adequate ventilation, see Section 3. •Clean the air filter. Dirt and debris on the filter can prevent the unit from functioning at full capacity, see Section 6. •Ensure that the heat load being applied to the chiller is not too high. Contact Thermo Fisher for assistance on calculating heat loads. •Bring cooler air in from another area or exhaust the hot air into another location using an auxiliary fan. •Verify/adjust controller PID values, see the end of this section. •Contact our Sales, Service and Customer Support.
Er 23	Unit will shut down.	Refrigeration temperature sensor shorted.	•Contact our Sales, Service and Customer Support.
Er 24	Unit will shut down.	Refrigeration temperature sensor open.	•Contact our Sales, Service and Customer Support.
Er 25	Unit will shut down.	Internal temperature sensor shorted.	•Contact our Sales, Service and Customer Support.
Er 26	Unit will shut down.	Internal temperature sensor open.	•Contact our Sales, Service and Customer Support.
Er 32	Unit will shut down.	Refrigeration suction gas temperature exceeded 50°C.	•Contact our Sales, Service and Customer Support.

Error Code	Reaction	Cause	Actions
Er 33	This error code has priority over **L oT**. Unit will shut down. **NOTE** Unit will not restart until process fluid temperature exceeds +2°C. ▲	Reservoir fluid temperature below the *factory preset* value of +2°C.	•Check ambient temperature. Unit may not to be able to reach setpoint at low ambient temperatures. •Ensure that the ambient temperature is not exceeding the recommended range, see Section 3. •Verify/adjust controller PID values, see Section 7. •Add insulation to external plumbing lines to reduce the heat-loss to the environment. •For water-cooled units check facility water temperature. •Contact our Sales, Service and Customer Support.
Er 35	This error code has priority over **Hi P1**. Unit will shut down.	Process pressure (P1) exceeded *factory preset* value for greater than 30 seconds. Preset Values: P1, P2 and T1- 105 psi P3 60 Hz - 48 psi P3 50 Hz - 32 psi P4 60 Hz - 85 psi P4 50 Hz - 60 psi P5 60 Hz - 87 psi P5 50 Hz - 56 psi	•Check application valves and ensure that they have not changed or been closed. **NOTE** If routine shut-off of the process flow is required then an external pressure regulator accessory should be added - contact Thermo Fisher. ▲ •May occur as a result of changing the internal DI cartridge. Disconnecting the cartridge adds an additional 0.5 GPM to the main flow, see Section 5. •Check for debris in the application or clogged external filters. •Double check fluid lines. Excessive bends, long tubing and diameter reductions can affect the pump's discharge pressure. **NOTE** If diameter reductions must be made, they should be made at the inlet and outlet of your application, not the chiller. ▲ •Contact our Sales, Service and Customer Support.
Er 36	This error code has priority over **Lo P1**. Unit will shut down.	Process pressure (P1) below *factory preset* limit of 3 psi (all pumps) for greater than 15 seconds. Possible pump motor overload.	•Ensure that the chiller reservoir is not too low. •Unit requires >3 PSIG application pressure drop. If a bypass valve has been installed, some restriction may need to be added to the bypass line. •Allow unit to cool down •Contact our Sales, Service and Customer Support.

Error Code	Reaction	Cause	Actions
Er 41	Unit continues to run.	Communication error between display and main control board.	•Cycle circuit protector on rear of unit off and on. •Contact our Sales, Service and Customer Support.
Er 42	Unit continues to run.	Internal communications error.	•Contact our Sales, Service and Customer Support.
Er 48	Unit will shut down. (Optional display.)	Unit's optional EMO button depressed.	•When able, reset the EMO.
Er 59	Unit will shut down.	Invalid level fault. Unit sensed both a high level and low level reservoir fluid level.	•Contact our Sales, Service and Customer Support.
Er 62	Unit will not start. (Units equipped with optional Analog I/O.)	Probe not properly connected. Shorted remote temperature probe.	•Check connection. •Contact our Sales, Service and Customer Support.
Er 63	Unit will not start. (Units equipped with optional Analog I/O.)	Probe not properly connected. Open remote temperature probe.	•Check connection. •Contact our Sales, Service and Customer Support.
Er 64	Unit will continue to run using the last valid setpoint received. (Units equipped with optional Analog I/O.)	Analog remote setpoint is enabled and the unit receives a voltage or current level that is outside the unit's set point range.	•The error can be cleared only after a valid set point is received, or the remote analog setpoint is turned off.

Checklist

Unit will not start

For first time use, please refer to the quick start instructions included with your unit or the copy in this manual. The manual's copy follows the Table of Contents.

Check the controller for error codes, see Error Codes in this section.

Ensure the optional GFCI breaker located on the rear of the unit is in the up position.

Ensure the circuit protector is in the on (**I**) position.

For ThermoFlex900 - 5000 Global Voltage units ensure the unit is properly configured, see Appendix B.

Make sure supply voltage is connected and matches the unit's nameplate rating ±10%

NOTE Once RS232 or RS485 is activated, all keypad operations are disabled except for turning the unit off and changing serial communication settings. ▲

No display on controller or display is 8888

Recycle the circuit protector on the rear of the unit.

Clearing Error Codes

Note the code in case it clears before you are done troubleshooting.

If desired, silence the audible alarm by pressing the up or down arrow key.

If the unit shut down, the controller will continue to flash the error code. Press **enter** to clear the display and silence any alarm. Refer to Error Codes in this section. Once the cause of the shut down is identified and corrected, start the unit. If the cause was not corrected the error code will reappear.

If the unit is still running, press **enter** to see if the code clears, a limit may have been only temporarily exceeded. If the error code does not clear press  until the display flashes between the error code and the temperature and then press **enter.** If the code still does not clear refer to Error Codes in this section.

Unit will not circulate process fluid

Check the reservoir level. Fill, if necessary.

Ensure the reservoir bag filter is not clogged.

Check the application for restrictions in the cooling lines.

Unit requires >3 PSIG application pressure drop. If a bypass valve has been installed add some restriction to the bypass line.

The pump motor overloaded. The pump's internal overtemperature overcurrent device will shut off the pump causing the flow to stop. This can be caused by low fluid, debris in system, operating unit in a high ambient temperature condition or excessively confined space. Allow time for the motor to cool down.

Make sure supply voltage matches the unit's nameplate rating ±10%.

Inadequate temperature control

Verify the setpoint.

Make sure the condenser/air filter is free of dust and debris.

Check the fluid concentration, see Section 3.

Ensure unit installation complies with the site requirements in Section 3.

Make sure supply voltage matches unit nameplate rating ±10%.

If the temperature continues to rise, make sure your application's heat load does not exceed the rated specifications.

Check for high thermal gradients (i.e., the application load is being turned on and off or rapidly changing).

Verify/adjust controller PID values, see next page.

Unit vibration

The optional pressure relief valve setting may be the cause. Change the pressure setting ± 5 psi to eliminate the vibration.

Unit shuts down

Ensure  button wasn't accidently pressed.

Ensure the optional GFCI breaker located on the rear of the unit is in the up position.

Ensure the circuit protector is in the on (**I**) position.

Check the controller for error codes, see Error Codes in this section.

Make sure supply voltage is connected and matches the unit's nameplate rating ±10%.

Restart the unit.

Please contact Thermo Fisher Scientific Sales Service and Customer Support if you need any additional information, see inside cover for contact instructions.

Verifying/ Adjusting the Controller PID Values

(Tune Loop)

The controller controls temperature using a Proportional-Integral-Derivative (PID) algorithm. Should your unit experience temperature control issues, verifying/adjusting the controller's PID values may correct the condition.

NOTE Thermo Fisher recommends that only a qualified technician adjust the PID values. Incorrect values will hamper unit performance. ▲

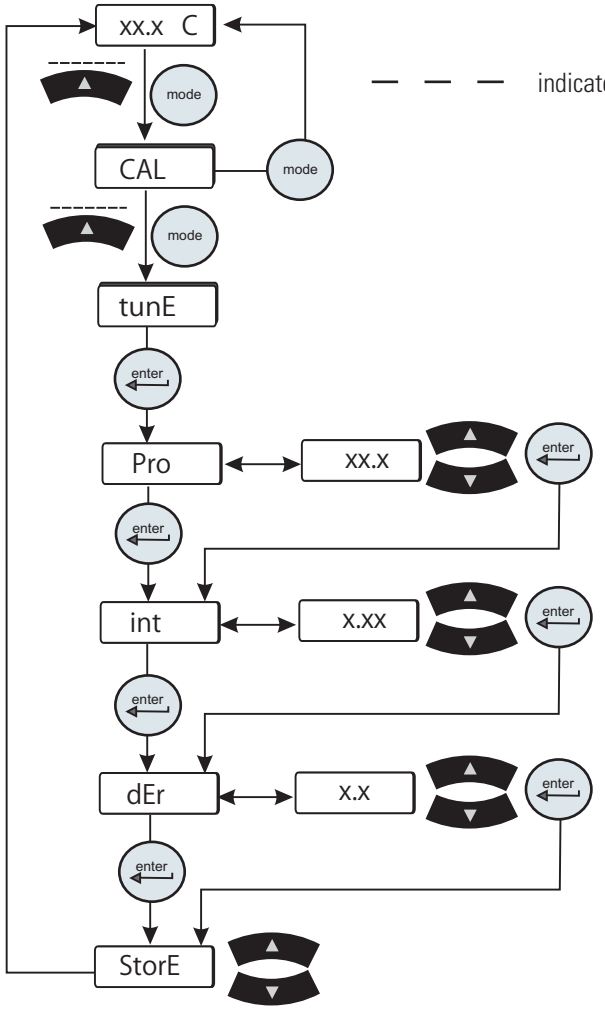

• Pro
proportional value
P = % of span (100°C)
Range: 0.0 to 99.9
Factory Preset:
ThermoFlex900-5000
10.0
ThermoFlex7500-10000
15.0

• int
integral value
I = repeats/minute
Range: 0.00 to 9.99
Factory Preset: 0.50

• dEr
derivative value
D = minutes
Range: 0.0 to 9.9
Factory Preset: 0.0

Figure 7-1 Verifying/Adjusting PID Values

Section 8 Additional Information

Draining

Before using any fluid or performing maintenance where contact with the fluid is likely refer to the manufacturer's MSDS for handling precautions. ▲

Position a suitable pan beneath the drain port at the rear of the unit. The drain pan must be shallow (under 3½" in height) and have a volume of approximately 3 gallons (6 gallons for ThermoFlex7500 - 10000). Remove ¼" Male NPT pipe plug from drain port. This will drain the return line, reservoir, plate exchanger, and the suction side of the pump.

To drain the discharge side of the pump disconnect the Female NPT outlet connection on the rear of the unit.

NOTE Internally the unit does not contain a large quantity of fluid on the discharge side however take care to contain what fluid does drain, a wet-vac can be employed to minimize the potential for spillage. ▲

If the unit is equipped with the flow control or pressure relief with flow control option, open the valve or remove the drain plug in order to drain the discharge line, see Section 5.

If the unit is equipped with the anti drainback option, enter the Setup Loop and utilize the **drAin** display to open the valve, see Section 4. Opening the valve allows the fluid to drain out of the unit.

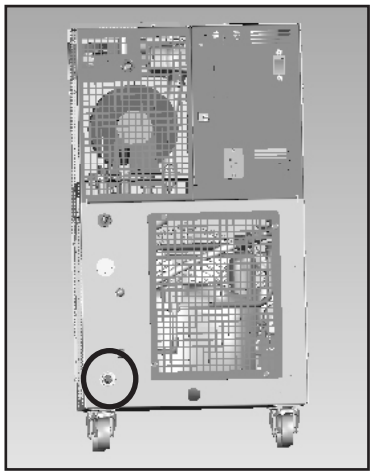

Reinstall ¼" Male NPT pipe plug using a sealant suitable for the wetted materials prior to refilling the unit.

Figure 8-1 1/4" Male NPT Reservoir Drain Plug

Water-Cooled

Draining ThermoFlex900 - 2500 water-cooled units is accomplished by removing the right side panel. Use a Philips head screwdriver to remove the five screws indicated in the illustration below. Slide the panel back approximately one inch, then lift slightly from the rear to disengage the panel's two tabs from their slots.

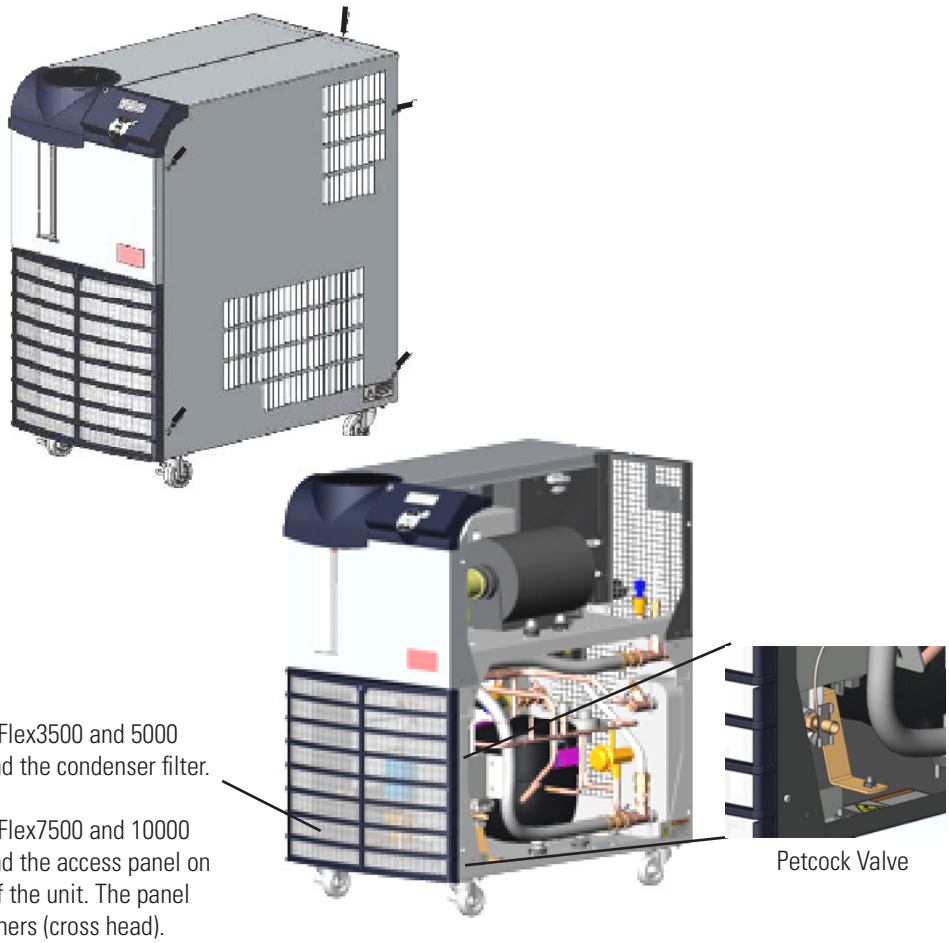

Figure 8-2 Water-Cooled

Install a $^{7}/_{16}$" ID tube on the drain petcock valve located on the lower end of the exchanger. Open the valve to allow fluid to drain into an external device. When draining is complete close the valve and replace the panel.

A wet-vac is needed on the facility water inlet connection to thoroughly drain any remaining fluid from the lines.

Wetted Materials

P1 and P2 Pumps

300 Series Stainless Steel
Bronze
Carbon Graphite
Ceramic
Fluorocarbon (Viton®)
Polysulfone

Tank

Polyethylene
Brass
EPDM
Pyrex®

Plumbing

300 Series Stainless Steel
Bronze
Fluorocarbon (Viton®)
Nickel
Polypropylene
EPDM
Brass
Copper
Teflon®
PPS (flow transducer)
Nitrile (Buna-n®)

Filter bag

Polypropylene
Mono-filament nylon

Funnel

Acetal Copolymer

P3, P4 and P5 Pumps

316 Series Stainless Steel
Carbon
Silicon Carbide
Fluorocarbon (Viton®)

T1 Pumps

Stainless Steel AISI 304
Bronze ASTM B62
Bronze ASTM B16
Buna N
Buna/Ceramic
Buna/Carbon

Internal Fluid Temperature Sensor (rdt1) Calibration

The ThermoFlex has been designed to minimize the need for calibration. However, if calibration is desired or recommended by our Sales, Service and Customer Support, please use the following procedure.

This procedure requires a running unit and a calibrated reference thermometer.

NOTE Uninsulated applications may cause the internal temperature and an external reference temperature to differ and to fluctuate. If inaccurate calibration is suspected, place the reference thermometer as close to the ThermoFlex process outlet as possible. ▲

NOTE If it is more convenient, perform the low-end calibration before doing the high-end. ▲

Do not pick calibration points that are outside the safe operating limits of the fluid in your application. For example with water, 40°C and 5°C are typical high and low calibration points.

Run the unit to a suitable high-end calibration point. Place a calibrated reference thermometer in the reservoir. Ensure the fluid temperature is stabilized.

To enter the Calibration Loop ensure the controller display is displaying the process fluid temperature, see the diagram on next page. Press and hold the  and then press the 

key. The display will indicate **CAL**. Press the 

key and the controller will display **rtd1**. Press 

again and the controller will display **r1 H** (high-end calibration). Press 

again and the controller will flash between **r1 H** and the temperature. Use  to adjust the temperature to match the reference thermometer. Press the 

key again to accept the value.

Press the  key until **StorE** is displayed, press  to save the new value, press  to not save it.

NOTE After pressing the  button at the **StorE** prompt wait several seconds before proceeding to ensure that a bad calibration message (**Er 16**) does not appear. Premature use of the keypad after pressing  may cancel the bad calibration error message. ▲

Run the unit to a suitable low-end calibration point. At the **r1 L** (low-end calibration) display repeat the procedure.

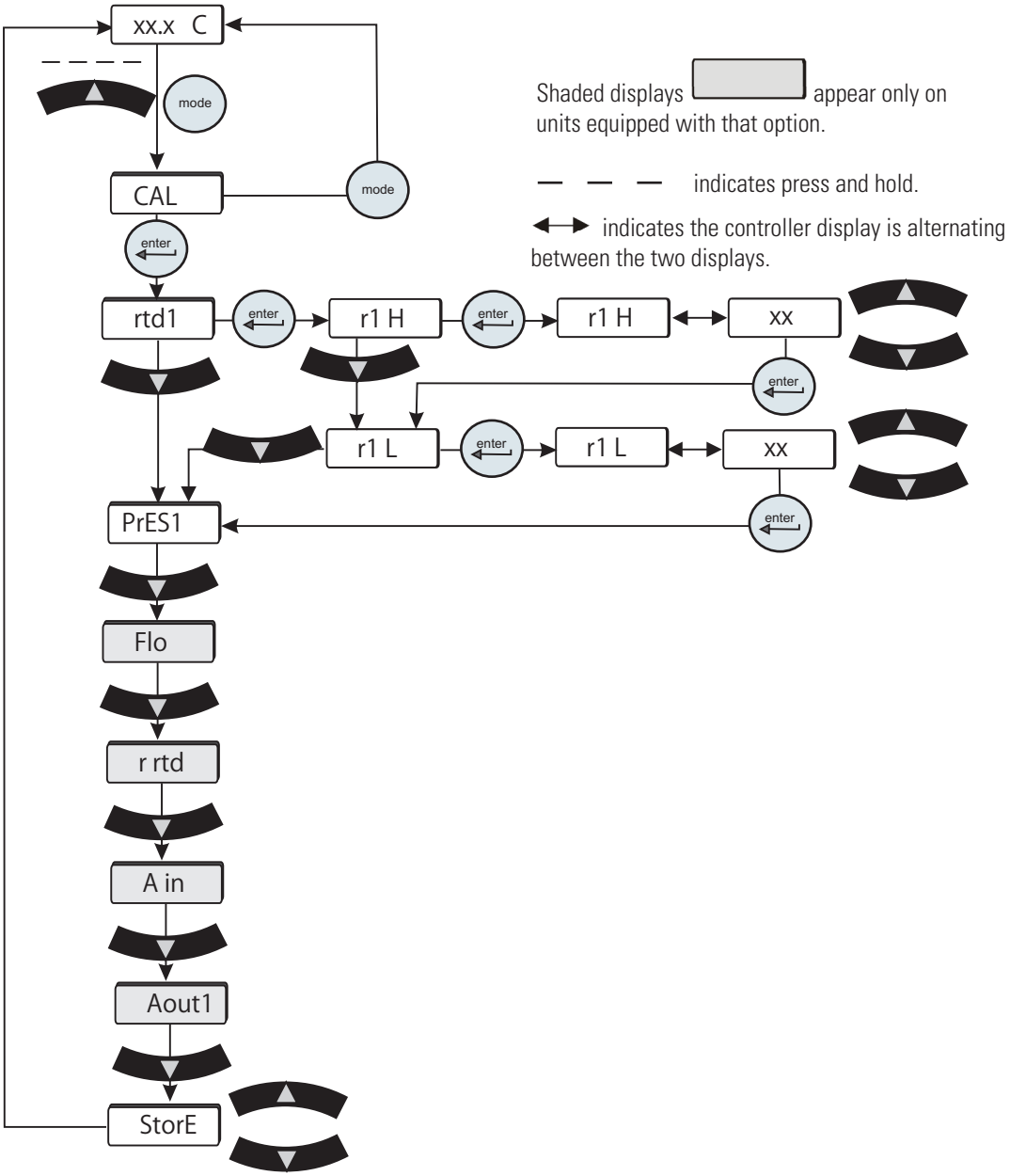

Figure 8-3 Internal Temperature Sensor Calibration

If you have any questions please contact Thermo Fisher Scientific's Sales, Service and Customer Support.

Process Fluid Pressure (P1) Transducer Calibration

The ThermoFlex has been designed to minimize the need for calibration. However, if calibration is desired or recommended by our Sales, Service and Customer Support, please use the following procedure.

This procedure requires a running unit, a calibrated reference pressure gauge and an external flow control valve.

Connect a calibrated reference pressure gauge to the outlet line. Using an external flow control valve, increase the pressure to a suitable high-end calibration point by closing the valve. Ensure the pressure is stabilized.

To enter the Calibration Loop ensure the controller display is displaying the process fluid temperature, see the diagram on the next page. Press and hold the  and then press the  key. The display will indicate **CAL**.

Press the  key and the controller will display **rtd1**. Press  until the controller displays **PrES1**. Press  and the controller will flash between **P1H** and the pressure.

Use  to adjust the rate to match the reference pressure gauge.

Press the  key to accept the value.

Decrease the pressure to a suitable low-end calibration point (avoid a zero pressure). Ensure the pressure is stable.

The controller will flash between **P1L** and the pressure. Use  to adjust the rate to match the reference pressure gauge.

Press the  key and **StorE** is displayed, press  to save both values, press  to not save them.

NOTE After pressing the  button at the **StorE** prompt wait several seconds before proceeding to ensure that a bad calibration message (**Er 16**) does not appear. Premature use of the keypad after pressing  may cancel the bad calibration error message. ▲

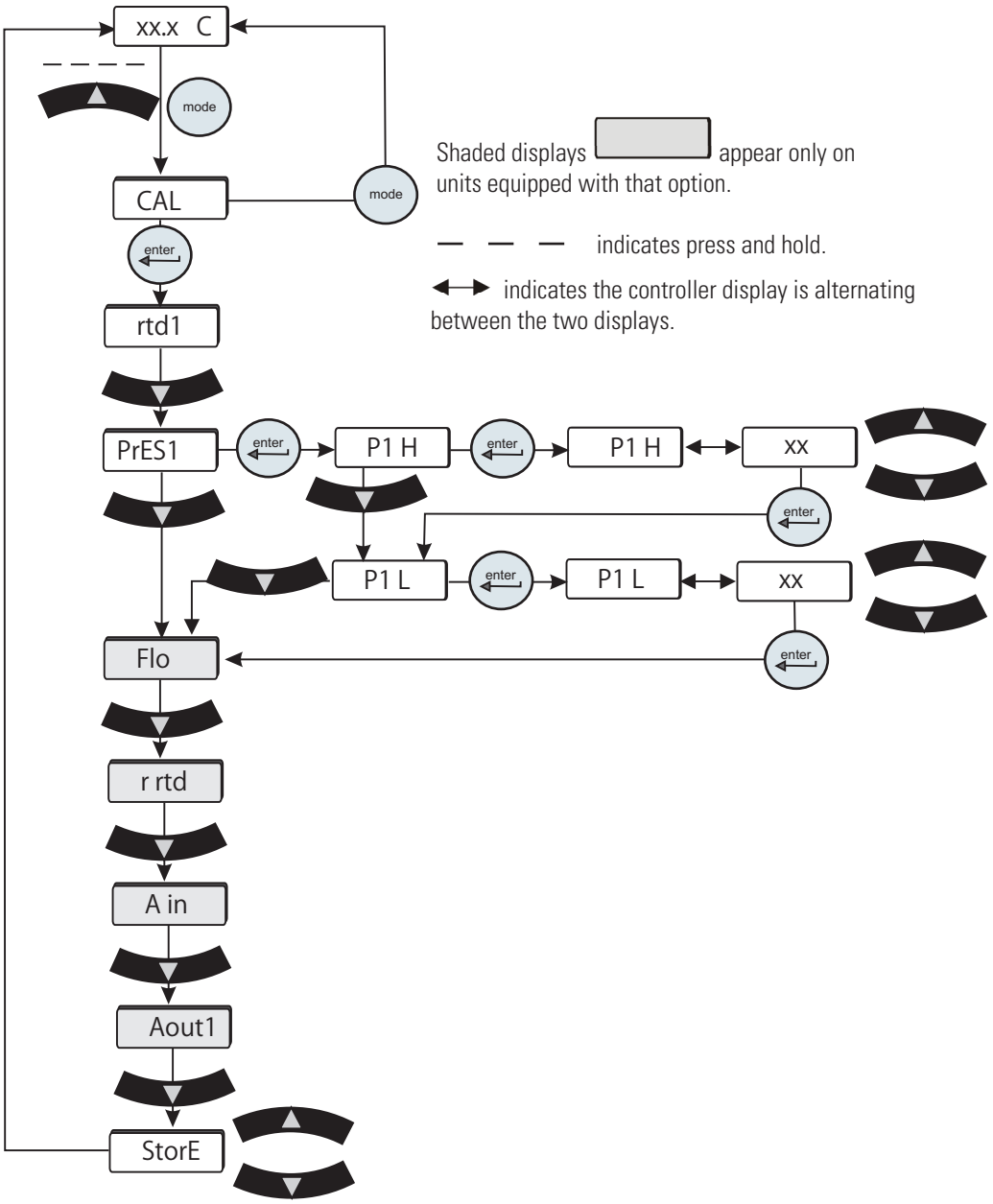

Figure 8-4 Pressure (P1) Calibration

If you have any questions please contact Thermo Fisher Scientific's Sales, Service and Customer Support.

Optional Process Fluid Flow Transducer (FLo) Calibration

The ThermoFlex has been designed to minimize the need for calibration. However, if calibration is desired or recommended by our Sales, Service and Customer Support, please use the following procedure.

This procedure requires a running unit, a calibrated reference flowmeter and an external flow control valve.

Connect a calibrated reference flowmeter to the outlet line. Using an external flow control valve, increase the flow to a suitable high-end calibration point. Ensure the flow is stabilized.

To enter the Calibration Loop ensure the controller display is displaying the process fluid temperature, see the diagram on the next page. Press and hold the  and then press the  key. The display will indicate **CAL**. Press the  key and the controller will display **rtd1**. Press  until the controller displays **FLo**. Press  and the controller will flash between **HiFLo** and the flow rate.

Use  to adjust the rate to match the reference flowmeter.

Press the  key to accept the value.

Decrease the flow to a suitable low-end calibration point (avoid a zero flow rate). Ensure the flow is stable.

The controller will flash between **LoFLo** and the flow rate. Use  to adjust the rate to match the reference flowmeter.

Press the  key and **StorE** is displayed, press  to save both values, press  to not save them.

NOTE After pressing the  button at the **StorE** prompt wait several seconds before proceeding to ensure that a bad calibration message (**Er 16**) does not appear. Premature use of the keypad after pressing  may cancel the bad calibration error message. ▲

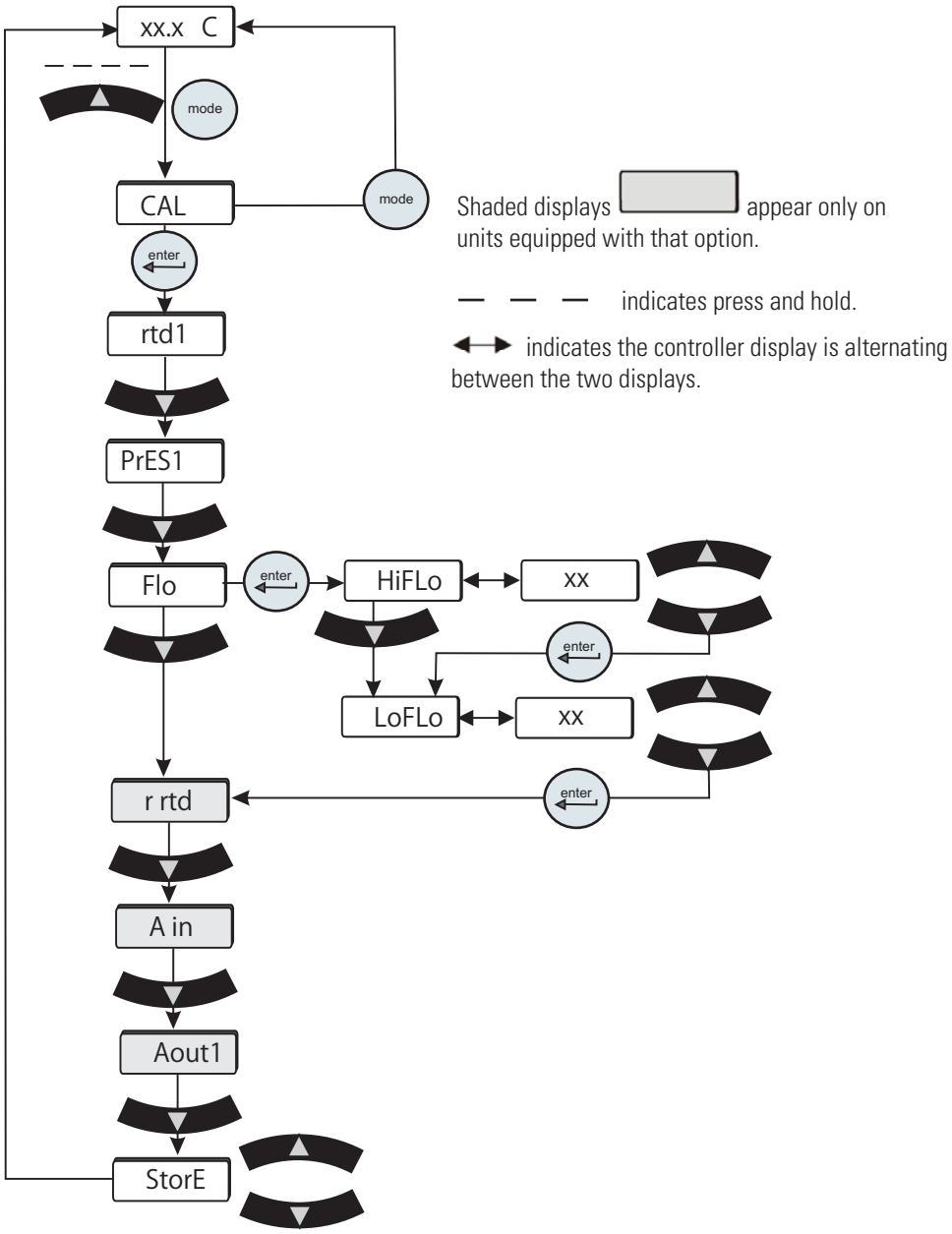

Figure 8-5 Flow Transducer (FLo) Calibration

If you have any questions please contact Thermo Fisher Scientific's Sales, Service and Customer Support.

Shipment/Storage



Transporting and/or storing the unit in near or below freezing temperatures requires draining, see Draining in this Section. Store the unit in the temperature range of -25°C to 60°C (with packaging), and <80% relative humidity. ▲



Do not store the unit for more than 90 days. ▲

Appendix A Country Specific 230 VAC, 50 Hz, 1Ø Requirements

Refer to the nameplate label located on the rear of the unit for specific electrical requirements.

1. Units shipped to the following locations require a **16 Amp service**:

Afghanistan, Albania, Algeria, Andorra, Angola, Argentina, Armenia, Austria, Azerbaijan, Belarus, Belgium, Benin, Bolivia, Bosnia and Herzegovina, Brazil, Bulgaria, Burkina Faso, Burundi, Cambodia, Cameroon, Cape Verde, Central African Republic, Chad, Chile, Comoros, Congo, Croatia, Czech Republic, Denmark, Djibouti, DR Congo, Ecuador, Egypt, Eritrea, Estonia, Ethiopia, Finland, France, French Guiana, Gabon, Georgia, Germany, Greece, Guinea, Hungary, Iceland, Indonesia, Iran, Iraq, Israel, Italy, Ivory Coast, Jordan, Kazakhstan, Kyrgyzstan, Latvia, Lebanon, Liberia, Libya, Liechtenstein, Lithuania, Luxembourg, Madagascar, Mali, Mauritania, Moldova, Monaco, Mongolia, Morocco, Mozambique, Namibia, Nepal, Netherlands, Niger, North Korea, Norway, Paraguay, Peru, Poland, Portugal, Romania, Russia, Rwanda, Saint Vincent and the Grenadines, San Marino, Sao Tome and Principe, Saudi Arabia, Senegal, Serbia, Slovakia, Slovenia, Somalia, South Africa, South Korea, Spain, Sweden, Switzerland, Syria, Tajikistan, Thailand, Togo, Tunisia, Turkey, Turkmenistan, Ukraine, Uruguay, Uzbekistan, Vanuatu, Vatican City, Vietnam.

2. Units shipped to the following locations require a **15 Amp service**:

Australia, China, Fiji Islands, Nauru, New Zealand, Papua New Guinea, Solomon Island, Tonga, Tuvalu.

3. Units shipped to the following locations require a **13 Amp service**:

Abu Dhabi, Bahrain, Bangladesh, Botswana, Brunei, Cyprus, Dominica, Gambia, Ghana, Gibraltar, Grenada, Hong Kong, India, Ireland, Kenya, Kiribati, Kuwait, Lesotho, Malawi, Malaysia, Maldives, Malta, Mauritius, Myanmar, Nigeria, Oman, Pakistan, Qatar, Saint Lucia, Seychelles, Sierra Leone, Singapore, Sri Lanka, Sudan, Swaziland, Tanzania, Uganda, United Arab Emirates, United Kingdom Yemen, Zambia, Zimbabwe.

Appendix B Voltage Configuration Instructions

ThermoFlex900 to 5000 units configured to operate at either 115V 60Hz or 100V 50/60Hz, or units with the Global Voltage option, have a voltage configuration panel located behind the access panel on the rear of the unit.

- Use a 1/4" socket to remove the four screws securing the access panel to the unit.
- The configuration panel has two 3-position toggle switches, one for voltage and one for frequency. All units are shipped with the toggle switch in the center **SHIP** position. Place each switch to the settings that match the voltage/frequency supplied to the unit.
- Reinstall the access panel.

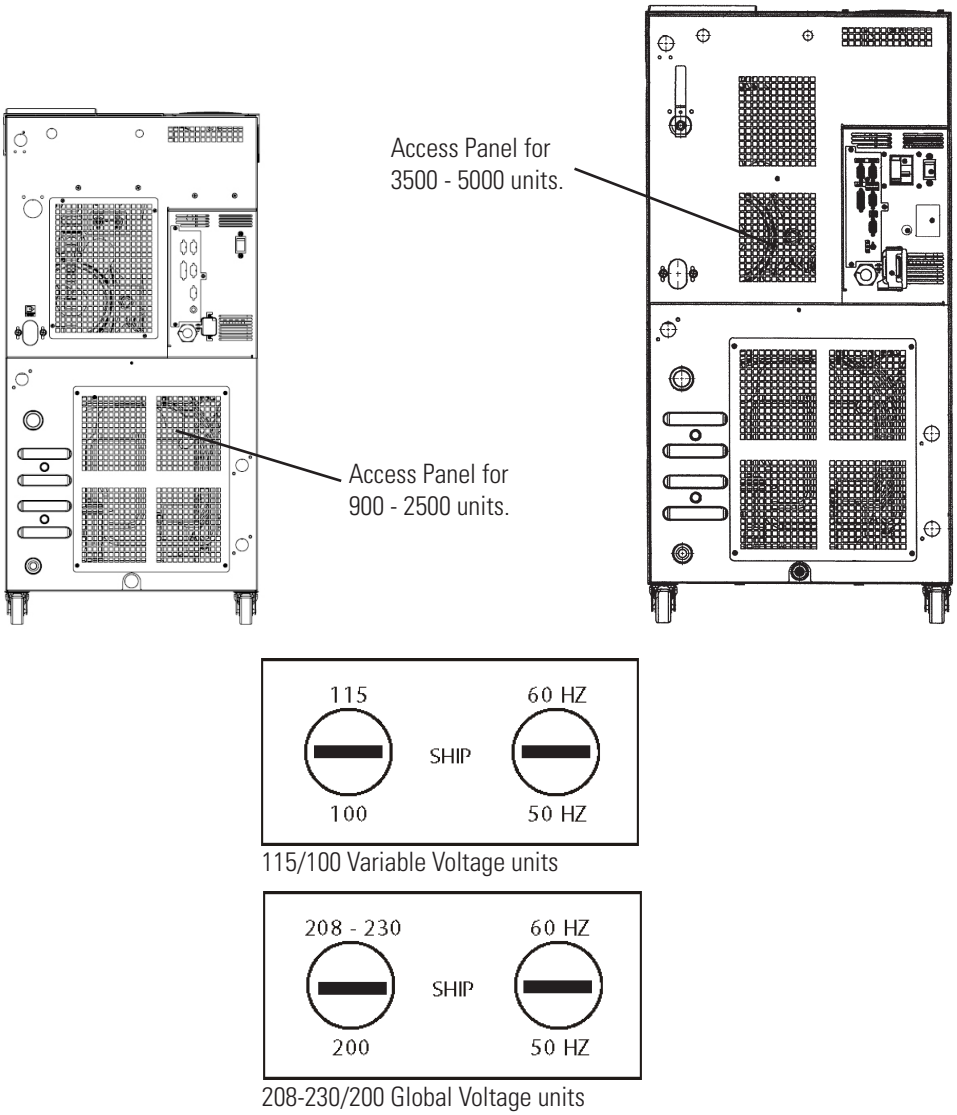

Figure B-1 Variable/Global Voltage Units

Appendix C Analog I/O and Remote Sensor

Analog I/O Connector Pinout ♀

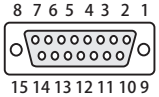

Install your analog input/output device to the 15-pin female connector on the rear of the unit. Analog I/O is activated using the Setup Loop, see page C-3.

PIN	NAME	NOTES	DEFINITION
1	DIGITAL INPUT COMMON		Common for digital inputs (pins 12, 13 and 14)
2	Not Used		
3	LOW LEVEL (Only if option chosen)	Note 1	Dry Relay Contact: Reference to pin 11. Closes if either level switch is in the "low" position for more than 1 second.
4	CONFIGURABLE RELAY 2	Note 1	Dry Relay Contact: Reference to pin 11. Closes when any configured fault or warning occurs, see Table 2.
5	PUMP ON	Note 1	Dry Relay Contact: Reference to pin 11. Closes when pump is turned on. Opens when pump is turned off.
6	ANALOG GROUND		Common for analog signals (pins 2, 7 and 15)
7	RESERVOIR TEMP OUT **OR** EXTERNAL SENSOR TEMPERATURE IF EXTERNAL SENSOR ENABLED	Note 2	Analog Voltage Output 0-10VDC, 10mV/°C, or 4-20mA: Reference to pin 6. This voltage output is proportional to the reservoir fluid temperature: Default scale= 0–10V (where: 0V = Low Temp Span, 10V = Hi Temp Span) Optional Range = 10mV/ ^{0}C. (Ex: 200mV = 20°C) (Max Load @ 10V = 5mA) or 4-20mA, 4mA = low temp span, 20 mA = high temp span (maximum output current = 5mA @10VDC. Contact us for details.
8	LOW FLOW (Only if option chosen)	Note 1	Dry Relay Contact: Reference to pin 11. Closes when a low flow occurs while the pump is on. Note: To allow the pump to get up to speed at startup, the pump runs for 3 - 5 seconds before the low flow sensor is read.
9	CONFIGURABLE RELAY 1 (Normally Open)	Note 1	Dry Relay Contact: Reference to pin 11. Closes when any of the configured faults occur, see Table 1.
10	CONFIGURABLE RELAY 1 (Normally Closed)	Note 1	Dry Relay Contact: Reference to pin 11. Complement of pin 9 (open when pin 9 is closed).
11	RELAY COMMON		Common for all relay contacts (pins 3, 4, 5, 8, 9, 10).
12	REMOTE START ENABLE	Note 3	Digital Input (Isolated): Reference to pin 1. Connect to pin 1 to allow unit to be remotely turned on/off through pin 14 REMOTE START.

Note 1: All relay contacts (except for Pin 10) are normally OPEN when power is off. Pin 10 contacts are normally CLOSED when power is off. Relay contacts are rated: 24V AC/DC, 2A, <= 0.08 Ohm maximum each or 5A total for all relays combined, 1mA minimum, switching capacity: 48VA/48W (Resistive load only).

Note 2: Jumper Configurable (Default = 10mV/°C)

Note 3: Sink 0.5mA @ 5VDC (Rated for signal level gold contact or TTL device)

PIN	NAME	NOTES	DEFINITION
13	REMOTE SETPOINT ENABLE	Note 3	Digital Input (Isolated): Reference to pin 1. Connect to pin 1 to allow the setpoint to be changed remotely through pin 15 REMOTE SETPOINT.
14	REMOTE START	Note 3	Digital Input (Isolated): Reference to pin 1. Connect to pin 1 to turn unit on. Disconnect to turn unit off. Note: Pins 1 and 12 must be connected to allow operation from this pin.
15	REMOTE SETPOINT	Note 2	Analog Voltage Input 0-10VDC, 10mV/°C, or 4-20mA: Reference to pin 6. Apply a DC voltage to this pin to adjust the unit's setpoint: Default Range = 0 – 10V (where: 0V = Low Temp Span, 10V = Hi Temp Span) (Input Impedance > 600K) Optional Range = 10mV/ ^{0}C. (Ex: 200mV = 20°C) (Max Input Voltage = 10VDC, or 4-20mA, 4mA = low temp span, 20 mA = high temp span. Contact us for details.

Note 1: All relay contacts (except for Pin 10) are normally OPEN when power is off. Pin 10 contacts are normally CLOSED when power is off. Relay contacts are rated: 24V AC/DC, 2A, <= 0.08 Ohm maximum each or 5A total for all relays combined, 1mA minimum, switching capacity: 48VA/48W (Resistive load only).

Note 2: Jumper configurable (default = 10mV/°C)

Note 3: Sink 0.5mA @ 5VDC (rated for signal level gold contact or TTL device)

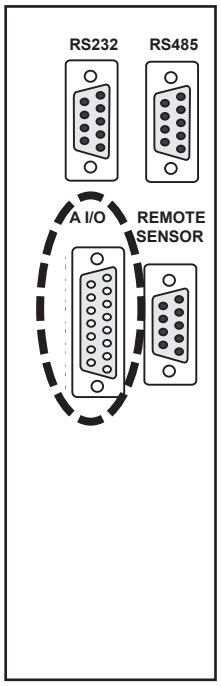

Figure C-1 Analog I/0 Connector

NOTE When making your connection to the ThermoFlex Analog I/0 connector, in order to comply with the EMC directive:

- Use a shielded I/0 cable
- Connect the remote end of the cable shield to earth ground.
- Connect cable shield to ThermoFlex end connector. ▲

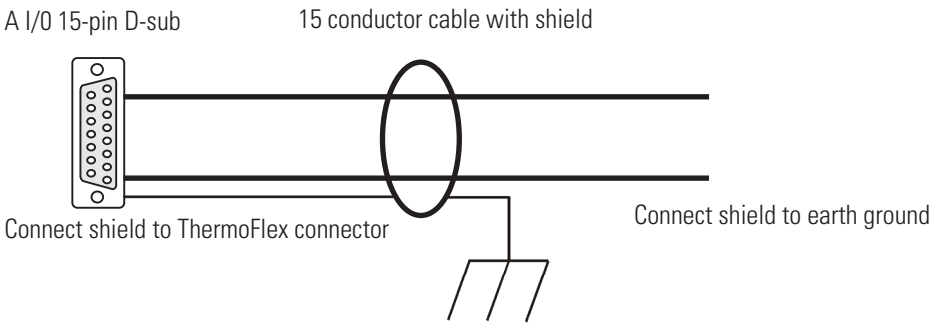

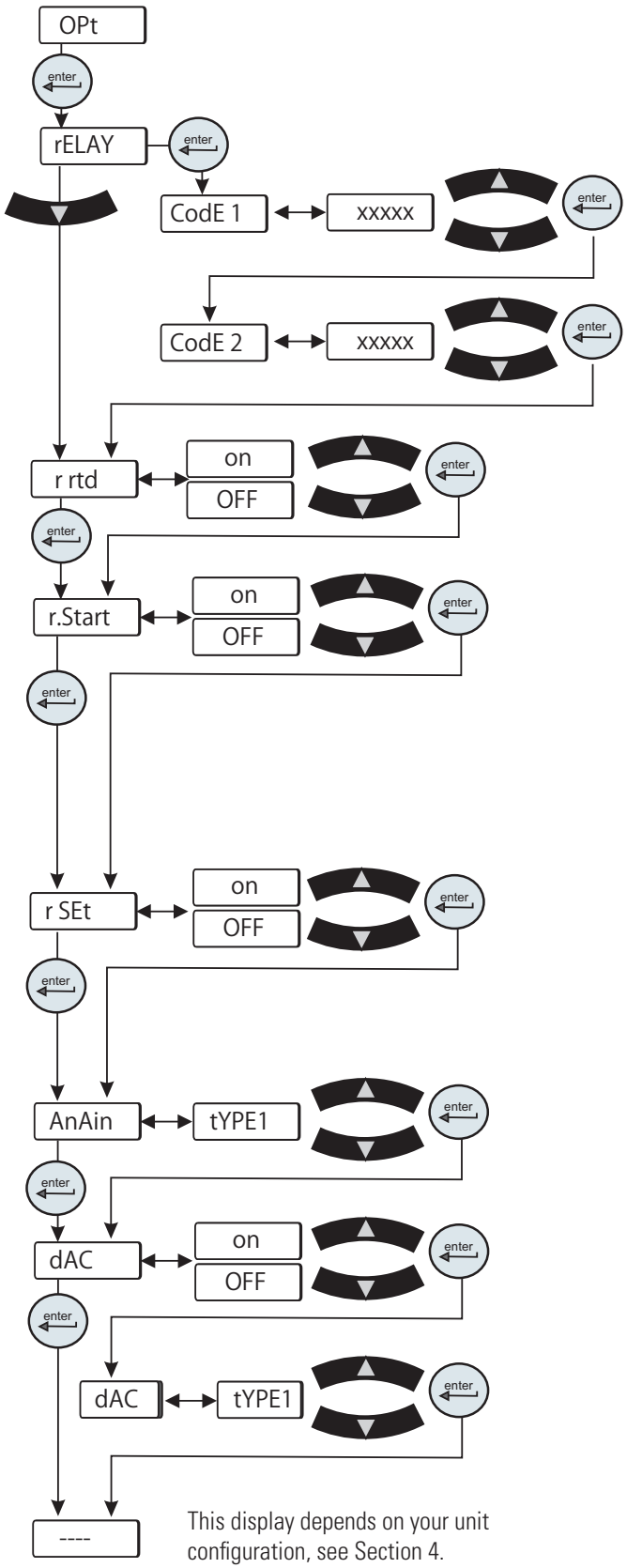

Figure C-2 Analog I/O Loop

• **rELAY** is used to configure the code for relays 1 and 2, see Tables 1 and 2 on the next page.

(Example: To have just the tank overflow **or** drip pan error fault activated for either relay you would enter code 6.)

• **r rtd** is used to enable/disable the remote temperature sensor. See Table 3 for pin out information.

NOTE There is no other indication on the unit that the remote sensor is enabled. ▲

• **r.Start** is used to enable/disable the remote start/stop.

NOTE The analog I/O remote start/stop capability has priority over the controller's start/stop, as well as any serial communications start/stop message. ▲

• **r SEt** is used to enable/disable the remote setpoint.

NOTE When remote setpoint is enabled a flashing dot will appear on the controller's display as shown below. ▲



• **AnAin** is used to configure the analog voltage input type.

Type 1: 0 - 10 VDC (Default)

Type 2: 10 mV/°C

Type 3: 4 - 20 mA

• **dAC** is used to enable/disable the digital to analog converter. Once enabled, the desired output type can be selected.

NOTE The **Type** display appears only if **dAC** is set to **on**. ▲

Type 1: 0 - 10 VDC (Default)

Type 2: 10 mV/°C

Type 3: 4 - 20 mA

Table 1	**Configurable Relay #1**		
Error	Error Number	Factory Default	Code 1
Low Level (option)	31	Enable	1 (Default)
Tank Overflow	44	Disable	2
Drip Pan Full (option)	57	Disable	4
Low Temp	19*	Disable	8
High Temp	21*	Disable	16
Low Flow (option)	27*	Enable	32 (Default)
High Flow (option)	29*	Disable	64
Low Resistivity (option)	28*	Disable	128
High Resistivity (option)	30*	Disable	256
High Pressure	60*	Disable	512
Low Pressure	61*	Disable	1024
Unit Fault	Any Fault	Enable	2048 (Default)
Pump/Unit Shut Off	Status bit(s)	Disable	4096
Refrigeration Shut Off	Status Bit	Disable	8192
Limit Fault (option)	39, 40, 45, 46, 47, 48	Enable	16384 (Default)
Sensor Fault	17, 18, 23, 24, 25, 26+ external sensor opened or shorted	Disable	32768 Default Relay Code 1 = 18465

*Regardless of alarm setting - fault or indicator

Table 2	**Configurable Relay #2**		
Error	Error Number	Factory Default	Code 2
Low Level (option)	20	Disable	1
Tank Overflow	44	Disable	2
Drip Pan Full (option)	57	Disable	4
Auto Refill Error (option)	43	Disable	8
Low Temp	19*	Enable	16 (Default)
High Temp	21*	Enable	32 (Default)
Low Flow (option)	27*	Disable	64
High Flow (option)	29*	Disable	128
Low Resistivity (option)	28*	Disable	256
High Resistivity (option)	30*	Enable	512(Default)
High Pressure	60*	Disable	1024
Low Pressure	61*	Disable	2048
Indicator (warning)	Any Indicator	Disable	4096
PM Timer (option)	50 - 56	Disable	8192
Comm Error	15, 41, 42	Disable	16384
Sensor Fault	17, 18, 23, 24, 25, 26+ external sensor opened or shorted	Enable	32768 (Default) Default Relay Code 2 = 33328

*Regardless of alarm setting - fault or indicator

Analog Input Calibration

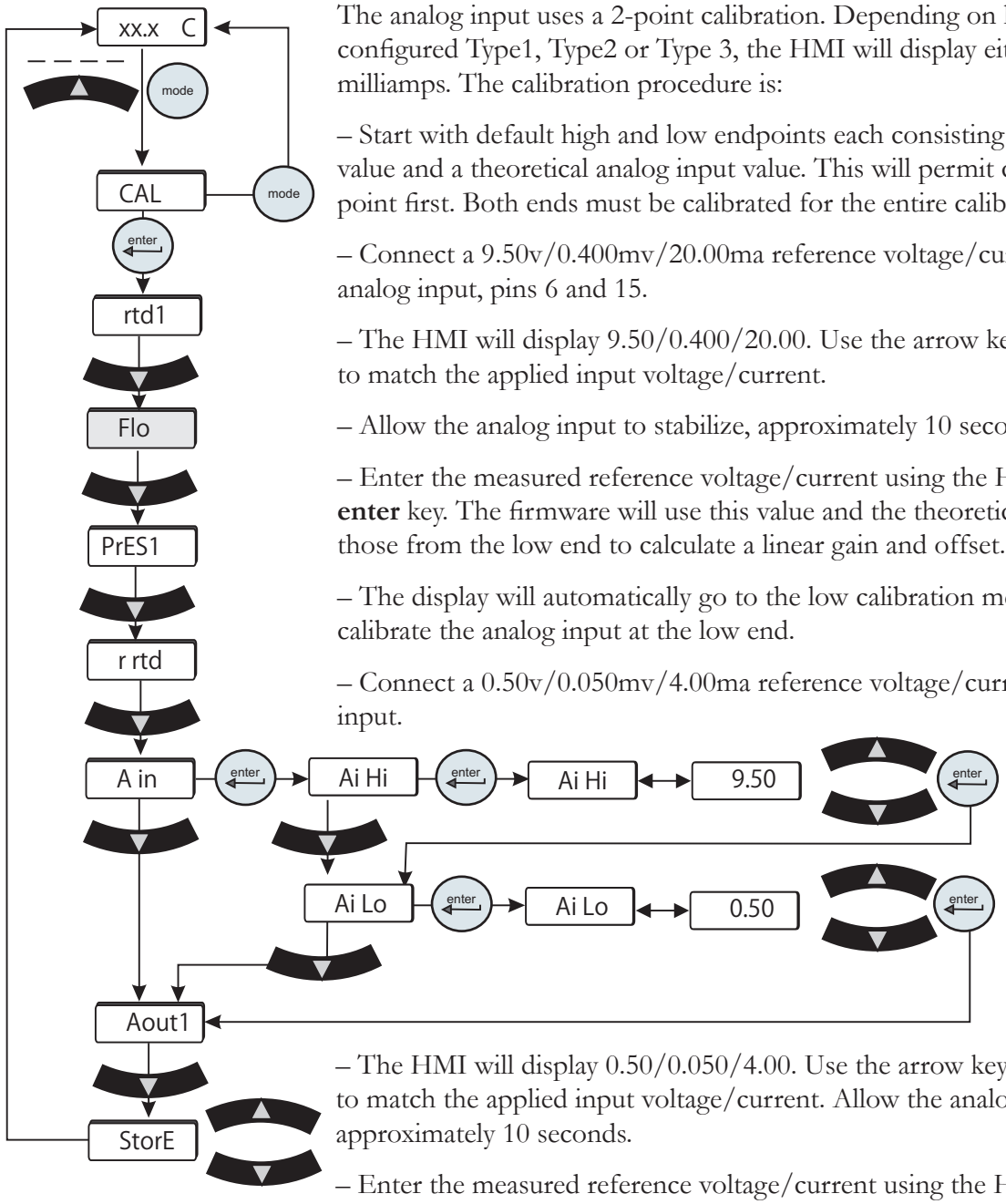

Figure C-3 Analog Input Calibration Loop

The analog input uses a 2-point calibration. Depending on how the analog input is configured Type1, Type2 or Type 3, the HMI will display either volts, millivolts or milliamps. The calibration procedure is:

– Start with default high and low endpoints each consisting of a voltage/current value and a theoretical analog input value. This will permit calibration of either point first. Both ends must be calibrated for the entire calibration to be valid.

– Connect a 9.50v/0.400mv/20.00ma reference voltage/current source to the analog input, pins 6 and 15.

– The HMI will display 9.50/0.400/20.00. Use the arrow keys to adjust the display to match the applied input voltage/current.

– Allow the analog input to stabilize, approximately 10 seconds.

– Enter the measured reference voltage/current using the HMI by pressing the **enter** key. The firmware will use this value and the theoretical analog value and those from the low end to calculate a linear gain and offset.

– The display will automatically go to the low calibration message. Press **enter** to calibrate the analog input at the low end.

– Connect a 0.50v/0.050mv/4.00ma reference voltage/current source to the analog input.

– The HMI will display 0.50/0.050/4.00. Use the arrow keys to adjust the display to match the applied input voltage/current. Allow the analog input to stabilize, approximately 10 seconds.

– Enter the measured reference voltage/current using the HMI by pressing the **enter** key. The firmware will use this value and the theoretical analog input value and those from the high end to calculate a linear gain and offset.

– If the gain and offset are acceptable, the calibration is accepted and the calibration is now valid at the low end. Otherwise, the calibration is rejected and a bad calibration error message (**Er 16**) is displayed.

Analog Output Calibration

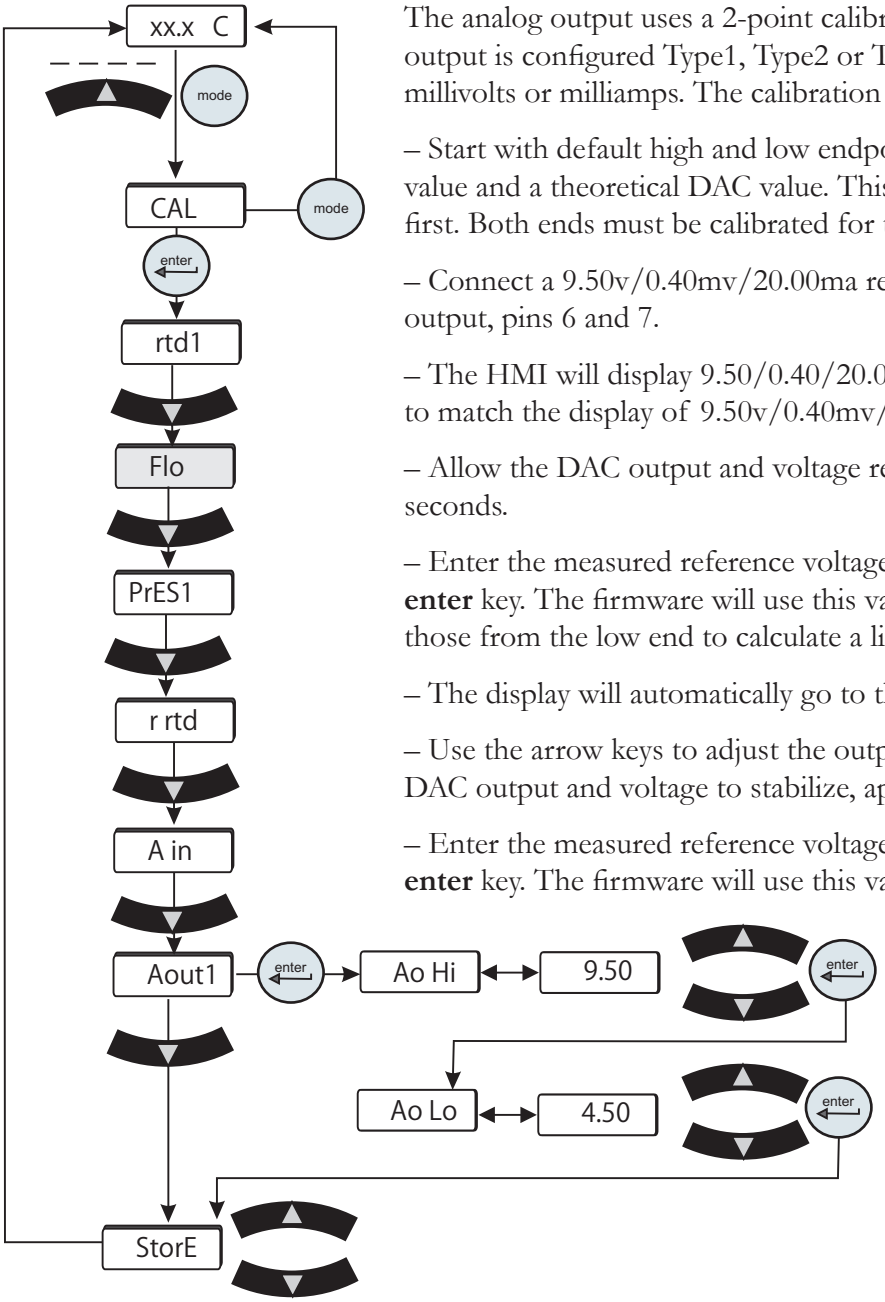

The analog output uses a 2-point calibration. Depending on how the analog output is configured Type1, Type2 or Type 3, the HMI will display either volts, millivolts or milliamps. The calibration procedure is:

– Start with default high and low endpoints each consisting of a voltage/current value and a theoretical DAC value. This will permit calibration of either point first. Both ends must be calibrated for the entire calibration to be valid.

– Connect a 9.50v/0.40mv/20.00ma reference voltage/current meter to the DAC output, pins 6 and 7.

– The HMI will display 9.50/0.40/20.00. Use the arrow keys to adjust the output to match the display of 9.50v/0.40mv/20.00ma.

– Allow the DAC output and voltage reading to stabilize, approximately 10 seconds.

– Enter the measured reference voltage/current using the HMI by pressing the **enter** key. The firmware will use this value and the theoretical DAC value and those from the low end to calculate a linear gain and offset.

– The display will automatically go to the low calibration point.

– Use the arrow keys to adjust the output to match the displayed value. Allow the DAC output and voltage to stabilize, approximately 10 seconds .

– Enter the measured reference voltage/current using the HMI by pressing the **enter** key. The firmware will use this value and the theoretical DAC value and those from the high end to calculate a linear gain and offset.

– If the gain and offset are acceptable, the calibration is accepted and the calibration is now valid at the low end. Otherwise, the calibration is rejected and a bad calibration error message (**Er 16**) is displayed.

Figure C-4 Analog Output Calibration Loop

Remote Sensor Connector Pinout

Table 3

Pin	
1	White
2	NA
3	NA
4	White
5	NA
6	NA
7	Red
8	NA
9	Red (4th wire not connected to the control board)

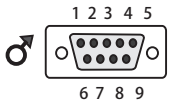

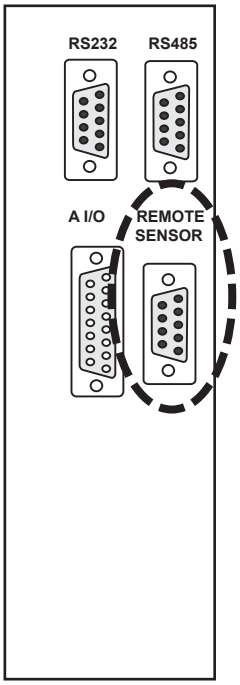

Figure C-5 Remote Sensor Connector

Remote Sensor Calibration

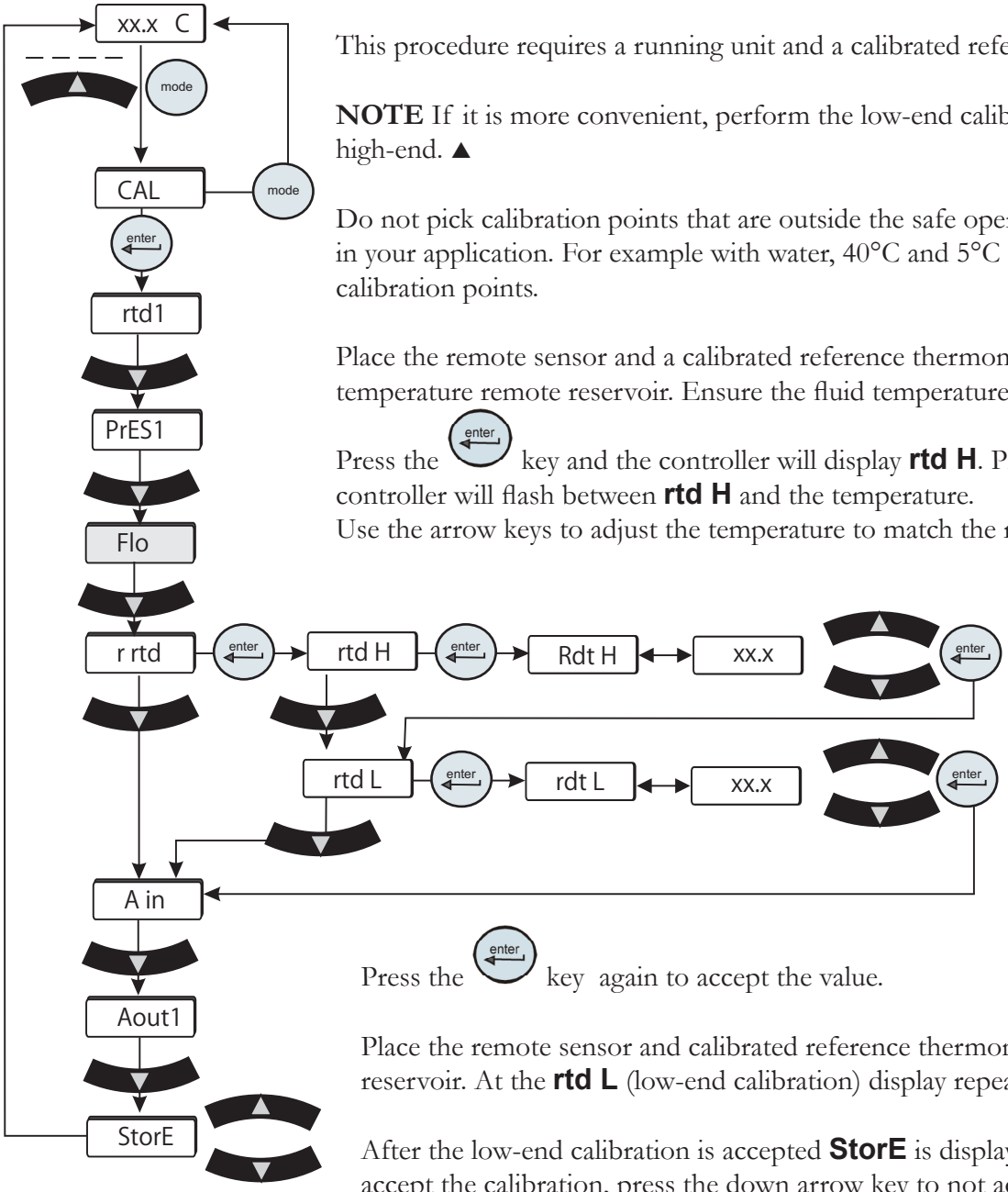

Figure C-6 Remote Sensor Calibration Loop

This procedure requires a running unit and a calibrated reference thermometer.

NOTE If it is more convenient, perform the low-end calibration before doing the high-end. ▲

Do not pick calibration points that are outside the safe operating limits of the fluid in your application. For example with water, 40°C and 5°C are typical high and low calibration points.

Place the remote sensor and a calibrated reference thermometer in the high temperature remote reservoir. Ensure the fluid temperature is stabilized.

Press the enter key and the controller will display **rtd H**. Press enter again and the controller will flash between **rtd H** and the temperature.
Use the arrow keys to adjust the temperature to match the reference thermometer.

Press the enter key again to accept the value.

Place the remote sensor and calibrated reference thermometer in a low temperature reservoir. At the **rtd L** (low-end calibration) display repeat the procedure.

After the low-end calibration is accepted **StorE** is displayed. Press the up arrow to accept the calibration, press the down arrow key to not accept it.

NOTE After pressing the up arrow button at the **StorE** prompt wait several seconds before proceeding to ensure that a bad calibration message (**Er 16**) does not appear. Premature use of the keypad after pressing the up arrow may cancel the bad calibration error message. ▲

Appendix D NC Serial Communications Protocol

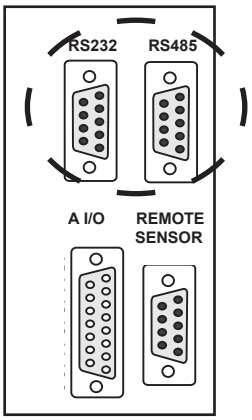

NOTE Appendix D assumes you have a basic understanding of communications protocols. ▲

Connect your PC to the applicable connector on the rear of the unit. Use the Setup Loop, see Section 4, to enable serial communications.

NOTE Once RS232 or RS485 is activated, all keypad operations are disabled except for turning the unit off and changing the serial communication's settings. ▲

Figure D-1 Connectors

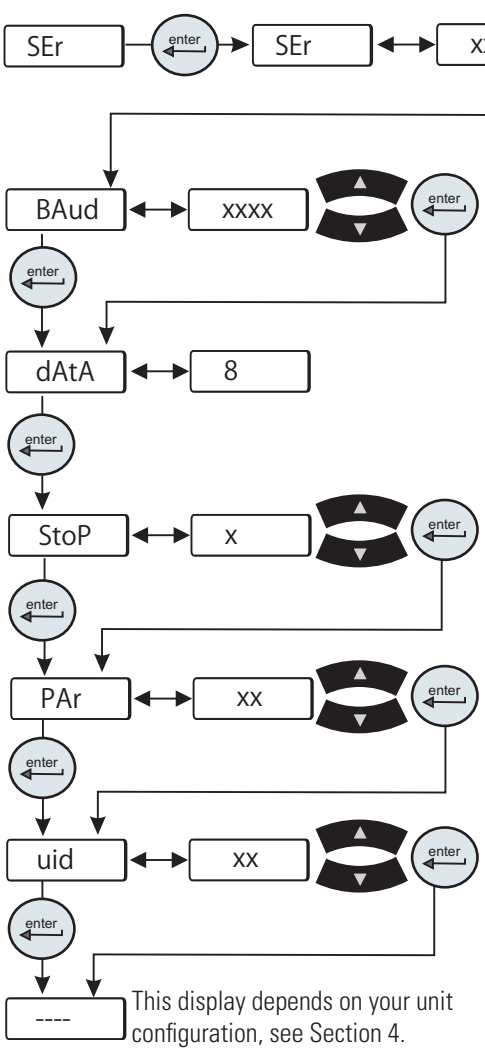

• **SEr** is used to enable/disable and to configure serial communications.
Range: oFF, rS232, rS485 **Default:** oFF

• **BAud** is used to select the baud rate (speed) for serial communications.
Range: 9600, 4800, 2400, 1200, 600, or 300 bits per second
Default: 9600

• **dAtA** is used to display the number of data bits.
Range: Fixed at 8

• **StoP** is used to indicate the number of stop bits.
Range: 2 or 1 **Default:** 1

• **PAr** is used as a means to check for communication errors.
Range: even, odd, or none **Default:** none

• **u id** (unit id) is used in RS485 only. Identifies devices connected to the RS 485 port.
Range: 1 to 99 **Default:** 1

NOTE: To prevent data errors limit the number of units to 32. ▲

Figure D-2 Serial Communications Loop

All data is sent and received in binary form, do not use ASCII. In the following pages the binary data is represented in hexadecimal (hex) format.

The NC Serial Communications Protocol is based on a master-slave model. The master is a host computer, while the slave is the chiller's controller. Only the master can initiate a communications transaction (half-duplex). The slave ends the transaction by responding to the master's query. The protocol uses RS-232/RS-485 serial interface with the default parameters: 9600 baud, 8 data bits, 1 stop bit, and no parity. RS-485 offers a slave address selection, default parameter: 1.

The unit can be controlled through your computer's serial port by using the unit's standard female 9-pin connection.

RS-232 COMM

Pin #	Function
1	No connection
2	TX
3	RX
4	No connection
5	GND = Signal ground
6 - 9	No connection

TX = Transmitted data from controller
RX = Received data to controller.

RS-485 COMM

Pin #	Function
1-7	No connection
8	T+
9	T-

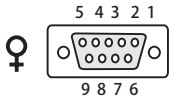

Hardware **Mating Connector**
AMP Part# 745492-2 or equivalent

Communication cables are available from Thermo Fisher. Contact us for additional information.

All commands must be entered in the exact format shown in the tables on the following pages. The tables show all commands available, their format and responses. Controller responses are either the requested data or an error message. The controller response *must* be received before the host sends the next command.

The host sends a command embedded in a single communications packet, then waits for the controller's response. If the command is not understood or the checksums do not agree, the controller responds with an error command. Otherwise, the controller responds with the requested data. If the controller fails to respond within 1 second, the host should resend the command.

NOTE All byte values are shown in hex, hex represents the binary values that must be sent to the chiller. **Do not use ASCII.**

The framing of the communications packet in both directions is:

	Checksum region							
Lead char OxCA/OxCC	Addr-MSB	Addr-LSB	Command	n d-bytes	d-byte 1	...	d-byte n	Checksum

Lead char	**0xCA (RS-232) 0xCC (RS-485)**
	Device address is 1 (RS-232)
Addr-msb	Most significant byte of slave address (RS-232: 0)
Addr-lsb	Least significant byte of slave address (RS-232: 1)
Command	Command byte (see Table of Commands)
n d-bytes	Number of data bytes to follow
d-byte 1	1st data byte (the qualifier byte is considered a data byte)
...	...
d-byte n	nth data byte.
Checksum	Bitwise inversion of the 1 byte sum of bytes beginning with the most significant address byte and ending with the byte preceding the checksum. (To perform a bitwise inversion, "exclusive OR" the one byte sum with FF hex.)

When a command has no value associated with it (e.g. REQ ACK), "n d-bytes" will be set to 0. Values such as temperature and flow are sent as either 2 or 4 byte signed integers, depending on how they are stored in the controller RAM.

When the controller sends a value, a qualifier byte is sent first, followed by a 2 or 4 byte integer (the least significant byte is sent last). The qualifier indicates the precision and units of the value. The host does not send the qualifier byte; it must send the value using the correct precision, units and number of bytes. The host first inquires about a value it wants to change, then uses the number of data bytes and the qualifier byte it receives to generate the proper integer to send.

Analog Values

Qualifier Byte	
b.7 b.6 b.5 b.4	Precision of measurement
b.3 b.2 b.1 b.0	Unit of measure index

	Unit of Measure
Index	Unit
0	NONE
1	Temperature in °C
2	Temperature in °F
3	Flow liters per minute
4	Flow in gallons per minute
5	Time in seconds
6	Pressure in PSI
7	Pressure in bars
8	Resistivity in MΩ-cm
9	%
10	Volts
11	Pressure in kPa

E.g., A qualifier byte of 0x12 indicated that the value contains one decimal point and the units are °F , i.e. 98.6°F.

Examples to set setpoint to 25°C:

A. The precision and units are 1°C; a 2 byte integer is used. If you already know this, skip to step 3.

1. Master sends:	CA 00 01 70 00 8E	(Request Setpoint 1)
2. Slave responds:	CA 00 01 70 03 01 00 14 76	Precision =1, units =°C, value=20 (20 x 1°C=20°C)
Response indicates:		
uses a 2 byte integer		(nn=03)
precision and units are 1°C		(d1=01)
3. Master sends:	CA 00 01 F0 02 00 19 F3	(Set Setpoint 1 to 25°C)
4. Slave responds:	CA 00 01 F0 03 01 00 19 F1	Precision =1, units =°C, value=25 (25 x 1°C=25°C)

B. The precision and units are 0.1°C; a 2 byte integer is used. If you already know this, skip to step 3.

1. Master sends:	CA 00 01 70 00 8E	(REQ SETPOINT1)
2. Slave responds:	CA 00 01 70 03 11 00 C8 B2	Precision =0.1, units =°C, value=200 (200 x 0.1°C=20.0°C)
Response indicates:		
uses a 2 byte integer		(nn=03)
precision and units are 0.1°C		(d1=11)
3. Master sends:	CA 00 01 F0 02 00 FA 12	(Set Setpoint 1 to 25.0°C)
4. Slave responds:	CA 00 01 F0 03 11 00 FA 00	Precision =0.1, units =°C, value=250 (250 x 0.1°=25.0.0°C)

See Additional Command Examples in this Appendix.

Table of Commands

Command	M: Master Sends S: Slave Responds	Notes
Request Status		
REQ ACK	M: lc a1 a2 **00** 00 cs S: lc a1 a2 **00** 02 v1 v2 cs	protocol version v1=0; v2=1
REQ UNIT SW VER or FIRMWARE CHECKSUM	M: lc a1 a2 **02** 00 cs S: lc a1 a2 **02** nn d1 … dn cs	Unit SW version in ASCII

Example: Request SW version, unit returns 084992.2N
1. Master sends: lc a1 a2 **02** 00 cs
2. Slave responds: lc a1 a2 **02** 0A 30 38 34 39 39 32 2E 32 4E 20 E4

Example: Request unit checksum, unit returns 20FA
1. Master sends: CA 00 01 **02** 01 01 FA
2. Slave responds: CA 00 01 **02** 04 32 30 46 41 0F

REQ DISPLAY MSG	M: lc a1 a2 **07** 00 cs S: lc a1 a2 **07** nn d1 … dn cs	Display message in ASCII
REQ STATUS	M: lc a1 a2 **09** 00 cs S: lc a1 a2 **09** nn d1 … dn cs	see Request Status Table in this Appendix
ERROR	M: S: lc a1 a2 **0F** 02 en ed cs	Response Only! ed = Error Data en = Error Number 1: Bad Command 2: Bad Data 3: Bad Checksum See Error in this Appendix

Request Low Alarm Values		
REQ LO FLOW1	M: lc a1 a2 **30** 00 cs S: lc a1 a2 **30** 03 d1 d2 d3 cs	Process Alarm
REQ LO TEMP1	M: lc a1 a2 **40** 00 cs S: lc a1 a2 **40** 03 d1 d2 d3 cs	Process Alarm
REQ LO ANALOG1	M: lc a1 a2 **48** 00 cs S: lc a1 a2 **48** 03 d1 d2 d3 cs	Pressure Process Supply Alarm
Request High Alarm Values		
REQ HI FLOW1	M: lc a1 a2 **50** 00 cs S: lc a1 a2 **50** 03 d1 d2 d3 cs	Process Alarm
REQ HI TEMP1	M: lc a1 a2 **60** 00 cs S: lc a1 a2 **60** 03 d1 d2 d3 cs	Process Alarm
REQ HI ANALOG1	M: lc a1 a2 **68** 00 cs S: lc a1 a2 **68** 03 d1 d2 d3 cs	Pressure Process Supply Alarm
Request Measurements		
REQ FLOW1	M: lc a1 a2 **10** 00 cs S: lc a1 a2 **10** 03 d1 d2 d3 cs	Process Fluid Flow
REQ TEMP1	M: lc a1 a2 **20** 00 cs S: lc a1 a2 **20** 03 d1 d2 d3 cs	Process Fluid Supply Temperature (RTD1)
REQ TEMP2	M: lc a1 a2 **21** 00 cs S: lc a1 a2 **21** 03 d1 d2 d3 cs	Refrigeration Suction Temperature (RTD2)
REQ TEMP3	M: lc a1 a2 **22** 00 cs S: lc a1 a2 **22** 03 d1 d2 d3 cs	Refrigeration Ambient Temperature (RTD3)
REQ ANALOG1	M: lc a1 a2 **28** 00 cs S: lc a1 a2 **28** 03 d1 d2 d3 cs	Process Fluid Supply Pressure (P1)
REQ ANALOG2	M: lc a1 a2 **29** 00 cs S: lc a1 a2 **29** 03 d1 d2 d3 cs	Refrigeration Suction Pressure (P2)
Request PID Settings		
REQ SETPT1	M: lc a1 a2 **70** 00 cs S: lc a1 a2 **70** 03 d1 d2 d3 cs	Process Fluid Setpoint
REQ COOL P TERM1	M: lc a1 a2 **74** 00 cs S: lc a1 a2 **74** 03 d1 d2 d3 cs	
REQ COOL I TERM1	M: lc a1 a2 **75** 00 cs S: lc a1 a2 **75** 03 d1 d2 d3 cs	
REQ COOL D TERM1	M: lc a1 a2 **76** 00 cs S: lc a1 a2 **76** 03 d1 d2 d3 cs	

Set Status Settings		
SET KEYSTROKE	M: lc a1 a2 **80** 02 d1 d2 cs S: lc a1 a2 **80** 02 d1 d2 cs	See Keystroke in this Appendix
SET ON/OFF ARRAY	M: lc a1 a2 **81** nn d1 … dn cs S: lc a1 a2 **81** nn d1 … dn cs	See Set On/Off Array in this Appendix di: 0 = OFF, 1 = ON, 2 = no change
SET CALIBRATION	M: lc a1 a2 **82** 05 d1 … d5 cs S: lc a1 a2 **82** 07 d1 … d7 cs	See Calibration in this Appendix
SET SAVE UNIT CALIBRATION	M: lc a1 a2 **8B** 02 d1 d2 cs S: lc a1 a2 **8B** 02 d1 d2 cs	Save unit calibration data to reset or backup See Save Unit Calibration in this Appendix. d1 calibration id d2 reset = 0/backup = 1
Set Low Alarm Values		
SET LO FLOW1	M: lc a1 a2 **B0** 02 d1 d2 cs S: lc a1 a2 **B0** 03 d1 d2 d3 cs	Process Alarm
SET LO TEMP1	M: lc a1 a2 **C0** 02 d1 d2 cs S: lc a1 a2 **C0** 03 d1 d2 d3 cs	Process Alarm
SET LO ANALOG1	M: lc a1 a2 **C8** 02 d1 d2 cs S: lc a1 a2 **C8** 03 d1 d2 d3 cs	Pressure Process Supply Alarm
SET High Alarm Values		
SET HI FLOW1	M: lc a1 a2 **D0** 02 d1 d2 cs S: lc a1 a2 **D0** 03 d1 d2 d3 cs	Process Alarm
SET HI TEMP1	M: lc a1 a2 **E0** 02 d1 d2 cs S: lc a1 a2 **E0** 03 d1 d2 d3 cs	Process Alarm
SET HI ANALOG1	M: lc a1 a2 **E8** 02 d1 d2 cs S: lc a1 a2 **E8** 03 d1 d2 d3 cs	Pressure Process Supply Alarm
SET PID Settings		
SET SETPT1	M: lc a1 a2 **F0** 02 d1 d2 cs S: lc a1 a2 **F0** 03 d1 d2 d3 cs	Process Fluid Setpoint
SET COOL P TERM1	M: lc a1 a2 **F4** 02 d1 d2 cs S: lc a1 a2 **F4** 03 d1 d2 d3 cs	Cool P Term
SET COOL I TERM1	M: lc a1 a2 **F5** 02 d1 d2 cs S: lc a1 a2 **F5** 03 d1 d2 d3 cs	Cool I Term
SET COOL D TERM1	M: lc a1 a2 **F6** 02 d1 d2 cs S: lc a1 a2 **F6** 03 d1 d2 d3 cs	Cool D term

Request Status Table

Basic

nn	4	
	b0	Unit Running
	b1	RTD1 open or shorted
	b2	RTD2 open or shorted
d1	b3	RTD3 open or shorted
	b4	High Temp fixed fault
	b5	Low Temp fixed fault
	b6	High Temp fault or warn
	b7	Low Temp fault or warn
	b0	High Pressure fault or warn
	b1	Low Pressure fault or warn
	b2	Drip Pan fault
d2	b3	High Level fault
	b4	Phase Monitor fault
	b5	Motor Overload fault
	b6	LPC fault
	b7	HPC fault
	b0	External EMO fault
	b1	Local EMO fault
	b2	Low Flow fault
d3	b3	AutoRefill fault
	b4	Sense 5V fault
	b5	Invalid level fault
	b6	Low fixed flow warn
	b7	High pressure fault (set at factory)
	b0	Low pressure fault (set at factory
d4	b1	Unit powering up
	b2	Unit powering down

Error

The slave detected an error in the message it received from the master, so it returns this command instead of echoing the command sent by the master. The slave returns the command it received from the master in the ed byte, and an error code in the en byte.

en	Error
1	Bad command – not recognized by slave
2	Bad data
3	Bad checksum

Some errors may not result in any response. The slave ignores incoming bytes until it sees the valid lead character and its slave address. Then it must receive the correct number of bytes (determined by the length byte) before it can respond. If an incomplete frame is received, the slave will timeout and clear its input buffer without responding.

Set On/Off Array

This command is used to set the state of the unit, on or off. Sending a 0 in the array turns off the unit while sending a 1 turns it on. Sending a 2 does not change the state. The array is returned showing the state after the command has been carried out. Sending all 2's effectively turns this command into a request status command.

nn	1
d1	Unit On/Off

Set Keystroke

This command is used to effect a keystroke remotely as if someone pressed the key on the HMI.

Value	
0	Null
1	Enter
2	Up/Yes
3	Down/No
4	Mode
5	On/Off

Set Special Commands

These commands are product specific.

Master Sends: lc a1 a2 **8D** nn d1 d2 d3 d4 d5 d6 cs

Slave Returns: lc a1 a2 **8D** nn d1 d2 d3 d4 d5 d6 cs

Byte	Master	Slave
d1	Command byte	
d2	Entered Value MSB	
d3	Entered Value	
d4	Entered Value	
d5	Entered Value	
d6	Entered Value LSB	

Command	Unit sends	Description	Slave returns
0x00	CA 00 01 8D 02 d1 d2 cs d1 = command byte = 00 d2 = analog option byte	Set analog option	CA 00 01 8D 03 00 d2 d3 cs
0x80	CA 00 01 8D 01 80 cs	Request PM ststus	CA 00 01 8D 03 80 d2 d3 cs

Set analog option command

d2 analog option byte

b.6 - b.7 = unused	b.4 - b.5 = DAC enable	b.2 - b.3 = DAC out	b.0 - b.1 = analog in
	0 = voltage	0 = voltage	0 = voltage
	1 = milivolt	1 = milivolt	1 = milivolt
	2 = current	2 = current	2 = current
	3 = no change	3 = no change	3 = no change

Eg. Command to enable DAC, set DAC out to Voltage and set Analog in to millivolt

Unit sends	Slave returns
CA 00 01 8D 02 00 11 5E	CA 00 01 8D 02 00 11 5E

Eg. Command to set DAC out to current without changing DAC enable or analog in

Unit sends	Slave returns
CA 00 01 8D 02 00 3B 34	CA 00 01 8D 02 00 19 56

WARRANTY

Thermo Fisher Scientific warrants for 24 months from date of shipment the Thermo Scientific NESLAB ThermoFlex unit according to the following terms.

Any part of the unit manufactured or supplied by Thermo Fisher Scientific and found in the reasonable judgment of Thermo Fisher to be defective in material or workmanship will be repaired at an authorized Thermo Fisher Repair Depot without charge for parts or labor. The unit, including any defective part must be returned to an authorized Thermo Fisher Repair Depot within the warranty period. The expense of returning the unit to the authorized Thermo Fisher Repair Depot for warranty service will be paid for by the buyer. Our responsibility in respect to warranty claims is limited to performing the required repairs or replacements, and no claim of breach of warranty shall be cause for cancellation or recision of the contract of sales of any unit. With respect to units that qualify for field service repairs, Thermo Fisher Scientific's responsibility is limited to the component parts necessary for the repair and the labor that is required on site to perform the repair. Any travel labor or mileage charges are the financial responsibility of the buyer.

The buyer shall be responsible for any evaluation or warranty service call (including labor charges) if no defects are found with the Thermo Scientific product.

This warranty does not cover any unit that has been subject to misuse, neglect, or accident. This warranty does not apply to any damage to the unit that is the result of improper installation or maintenance, or to any unit that has been operated or maintained in any way contrary to the operating or maintenance instructions specified in this Instruction and Operation Manual. This warranty does not cover any unit that has been altered or modified so as to change its intended use.

In addition, this warranty does not extend to repairs made by the use of parts, accessories, or fluids which are either incompatible with the unit or adversely affect its operation, performance, or durability.

Thermo Fisher Scientific reserves the right to change or improve the design of any unit without assuming any obligation to modify any unit previously manufactured.

THE FOREGOING EXPRESS WARRANTY IS IN LIEU OF ALL OTHER WARRANTIES, EXPRESSED OR IMPLIED, INCLUDING BUT NOT LIMITED TO WARRANTIES OR MERCHANTABILITY AND FITNESS FOR A PARTICULAR PURPOSE.

OUR OBLIGATION UNDER THIS WARRANTY IS STRICTLY AND EXCLUSIVELY LIMITED TO THE REPAIR OR REPLACEMENT OF DEFECTIVE COMPONENT PARTS AND Thermo Fisher Scientific DOES NOT ASSUME OR AUTHORIZE ANYONE TO ASSUME FOR IT ANY OTHER OBLIGATION.

Thermo Fisher Scientific ASSUMES NO RESPONSIBILITY FOR INCIDENTAL, CONSEQUENTIAL, OR OTHER DAMAGES INCLUDING, BUT NOT LIMITED TO LOSS OR DAMAGE TO PROPERTY, LOSS OF PROFITS OR REVENUE, LOSS OF THE UNIT, LOSS OF TIME, OR INCONVENIENCE.

This warranty applies to units sold in the United States. Any units sold elsewhere are warranted by the affiliated marketing company of Thermo Fisher Scientific. This warranty and all matters arising pursuant to it shall be governed by the law of the State of New Hampshire, United States. All legal actions brought in relation hereto shall be filed in the appropriate state or federal courts in New Hampshire, unless waived by Thermo Fisher Scientific.

Product Specifications

Reliable, easy-to-use chillers optimized for diverse applications. Cooling capacities up to 10000 watts.

Thermo Scientific NESLAB ThermoFlex

Recirculating Chillers



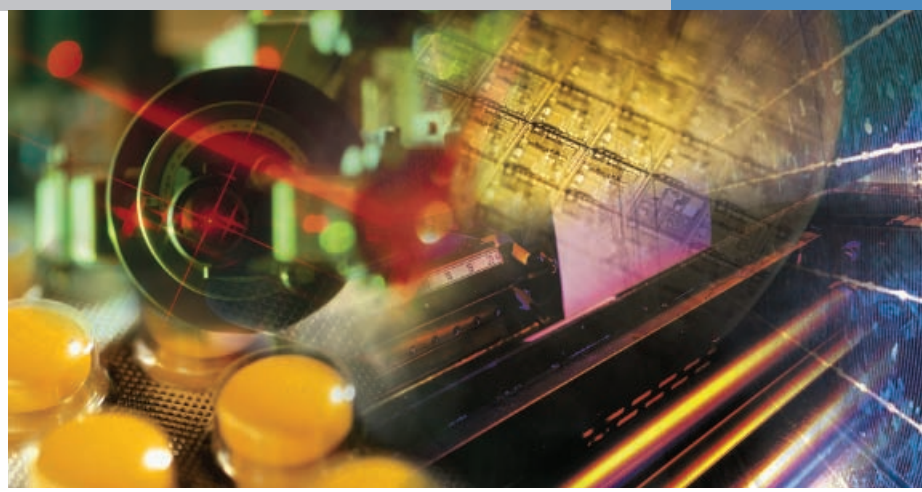

Ideal for diverse applications within the following markets:

- Analytical
- Biotech
- Industrial
- Laser
- Medical
- Metrology
- Packaging
- Pharmaceutical
- Printing
- Research
- Semiconductor
- University

Innovative Platform

The new Thermo Scientific NESLAB ThermoFlex platform was developed with customer input from concept to design. The result is an easy-to-use, easy-to-maintain high performance chiller platform configurable to the most demanding applications.

Superior Performance

- Improved cooling capacity
- Increased reliability
- Ease of maintenance

Ease of Use

- An intuitive user interface for ease of operation
- Air and water filters that can be changed while unit is in operation
- Innovative, patented packaging for rapid installation
- Quick start guide for seamless start-up in minutes

Configurable Design

- Wide range of available cooling capacities
- Variety of available options
- Installation flexibility
- Extended temperature range

Innovative Design

Features common to Thermo Scientific NESLAB ThermoFlex recirculating chillers

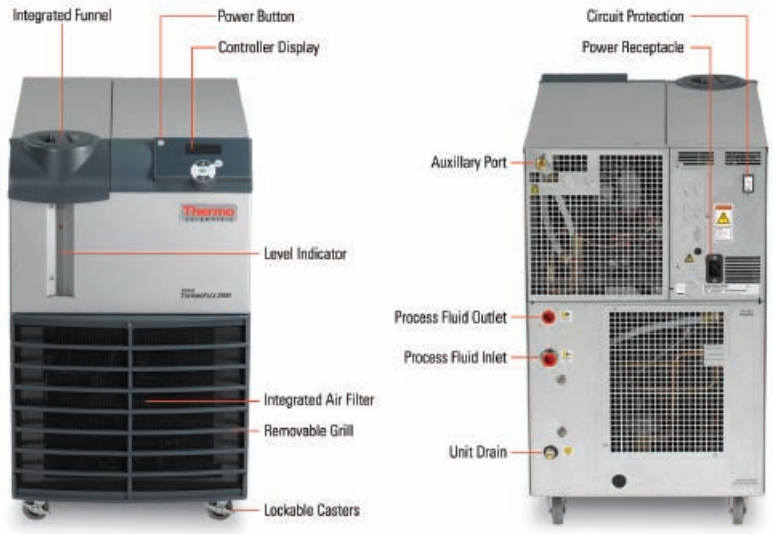

Options

Options include:

Feature	Benefit
Pressure Relief	The pressure relief valve allows the user to set the maximum fluid pressure to meet the application requirements and is available as an internal or external option.
Pressure Relief with Flow Readout	The pressure relief valve allows the user to set the maximum fluid pressure to meet the application requirements. The flow readout allows the user to monitor the flow rate to the application and set flow alarms via the controller.
Flow Control with Flow Readout	The flow control valve allows the user to adjust the flow to the application. The flow readout allows the user to monitor the flow rate to the application and set flow alarms via the controller.
Auto Refill	Allows for automatic refilling from a customer-supplied water source to ensure the proper fluid level is maintained.
Anti Drainback	Prevents fluid from flowing back to the reservoir when the chiller is installed below the application.
DI Water	Partial flow internal DI cartridge minimizes footprint and provides fluid resistivity between 1 and 3 megOhm.
RS232 & RS485 Digital Communication	Provides digital communication for remote operation, monitoring and data logging.
Analog I/O	Provides analog communication for remote operation and monitoring. Includes a remote sensor port which allows for remote temperature control of an application when used with a remote sensor (available as an accessory).
Global Voltage	Allows the user to select the appropriate frequency and voltage to enable operation anywhere in the world.
Air-Cooled Condenser	Uses ambient-temperature room air to remove application heat.
Water-Cooled Condenser	Uses facility water to remove application heat.
SEMI S2 Compliance	Compliant with S2-0703, S8-0705, S14-0704, F47-0706.
Deluxe Controller	LCD controller offers the ultimate in ease of use with graphical display and text. Multi-position level sensor enables user to easily monitor the fluid level on the display.
DI Control and Readout*	Allows the user to both set and readout the DI level between 1 and 3 megOhm using the controller.
High Temperature*	Allows for operation from +5°C to +90°C.

**Available with the deluxe controller option.*

Controller Options



Standard Controller

- Single line LED Display
- Temperature alarms
- Pressure alarms
- Flow alarms (optional)



Deluxe Controller

- Multi-line LCD Display
- Full alphanumeric display
- Temperature alarms
- Pressure alarms
- Fluid level readout
- Flow alarms (optional)
- DI control & readout (optional)

Cooling Capacity

Cooling Capacity for NESLAB ThermoFlex 900, 1400 & 2500

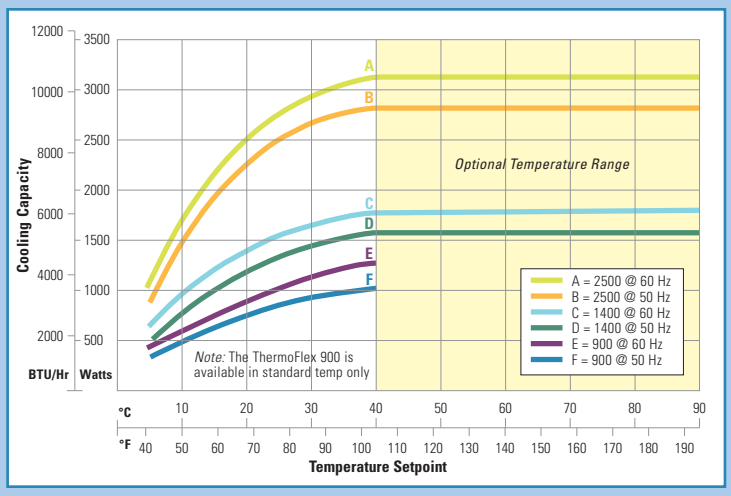

Cooling Capacity for NESLAB ThermoFlex 3500 & 5000

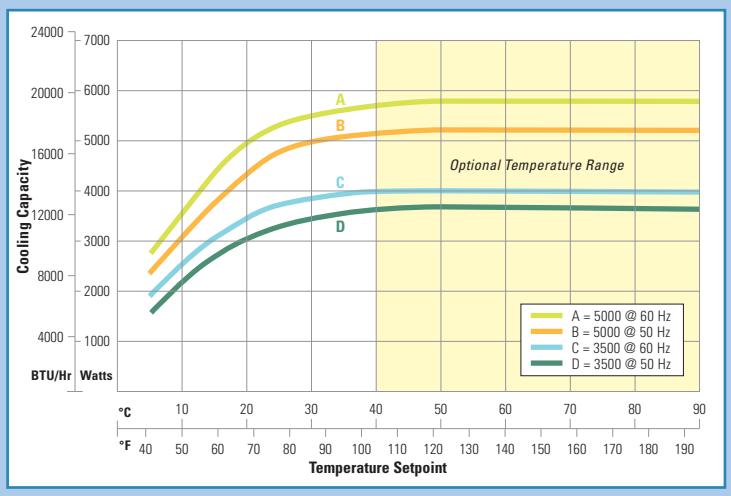

Cooling Capacity for NESLAB ThermoFlex 7500 & 10000

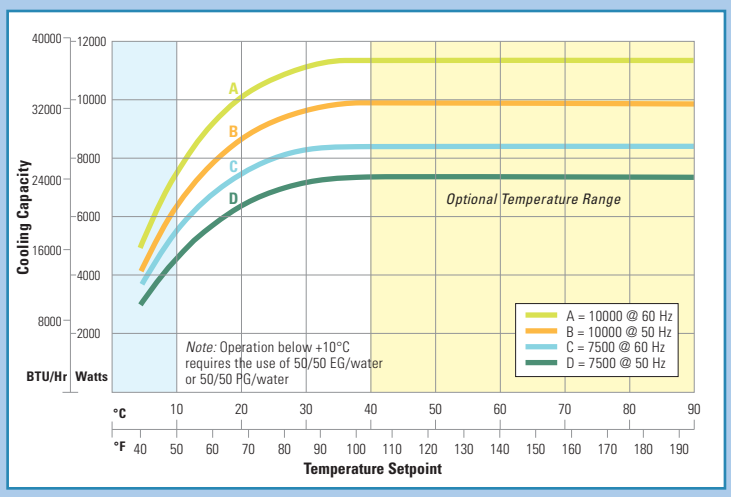

Cooling capacity based on units with P2 pumps with no backpressure.
Other pumps will affect cooling capacity performance.

See back page for pumping capacity.







Thermo Scientific NESLAB ThermoFlex Recirculating Chillers



Patented full flow filter ensures clean fluid to protect your application and maximize recirculation system life.



Easily removable condenser grill and air filter allow for quick and simple cleaning to optimize chiller performance and maximize component life.



Patented integrated funnel design allows for spill proof filling.







	NESLAB ThermoFlex 900	NESLAB ThermoFlex 1400	NESLAB ThermoFlex 2500
Standard Temperature Range	+5°C to +40°C (+41°F to +104°F)	+5°C to +40°C (+41°F to +104°F)	+5°C to +40°C (+41°F to +104°F)
Optional Temperature Range	—	+5°C to +90°C (+41°F to +194°F)	+5°C to +90°C (+41°F to +194°F)
Ambient Temperature Range	+10°C to +40°C (+50°F to +104°F)	+10°C to +40°C (+50°F to +104°F)	+10°C to +40°C (+50°F to +104°F)
Temperature Stability	±0.1°C	±0.1°C	±0.1°C
Standard Cooling Capacity			
60 Hz at +20°C	900 W / 3074 BTU	1400 W / 4781 BTU	2500 W / 8538 BTU
50 Hz at +20°C	750 W / 2561 BTU	1170 W / 3996 BTU	2200 W / 7513 BTU
Reservoir Volume	1.9 gallons (7.2 liters)	1.9 gallons (7.2 liters)	1.9 gallons (7.2 liters)
Refrigerant	R134A	R134A	R134A
Physical Dimensions (H x W x D)			
Air-Cooled	27.3 x 14.2 x 24.6 in (69.2 x 36.0 x 62.4 cm)	27.3 x 14.2 x 24.6 in (69.2 x 36.0 x 62.4 cm)	29.0 x 17.2 x 26.5 in (73.6 x 43.6 x 67.3 cm)
Water-Cooled	—	27.3 x 14.2 x 24.6 in (69.2 x 36.0 x 62.4 cm)	29.0 x 17.2 x 26.5 in (73.6 x 43.6 x 67.3 cm)
P1 — Positive Displacement Pump			
60 Hz	2.1 gpm @ 60 psig (7.9 lpm @ 4.1 bar)	2.1 gpm @ 60 psig (7.9 lpm @ 4.1 bar)	2.1 gpm @ 60 psig (7.9 lpm @ 4.1 bar)
50 Hz	1.7 gpm @ 60 psig (6.4 lpm @ 4.1 bar)	1.7 gpm @ 60 psig (6.4 lpm @ 4.1 bar)	1.7 gpm @ 60 psig (6.4 lpm @ 4.1 bar)
P2 — Positive Displacement Pump			
60 Hz	4.0 gpm @ 60 psig (15.1 lpm @ 4.1 bar)	4.0 gpm @ 60 psig (15.1 lpm @ 4.1 bar)	4.0 gpm @ 60 psig (15.1 lpm @ 4.1 bar)
50 Hz	3.3 gpm @ 60 psig (12.5 lpm @ 4.1 bar)	3.3 gpm @ 60 psig (12.5 lpm @ 4.1 bar)	3.3 gpm @ 60 psig (12.5 lpm @ 4.1 bar)
T1 — Turbine Pump**			
60 Hz	3.5 gpm @ 60 psid (13.2 lpm @ 4.1 bar)	3.5 gpm @ 60 psid (13.2 lpm @ 4.1 bar)	3.5 gpm @ 60 psid (13.2 lpm @ 4.1 bar)
50 Hz	2.5 gpm @ 60 psid (9.5 lpm @ 4.1 bar)	2.5 gpm @ 60 psid (9.5 lpm @ 4.1 bar)	2.5 gpm @ 60 psid (9.5 lpm @ 4.1 bar)
P3 — Centrifugal Pump**			
60 Hz	—	—	—
50 Hz	—	—	—
P4 — Centrifugal Pump**			
60 Hz	—	—	—
50 Hz	—	—	—
P5 — Centrifugal Pump**			
60 Hz	—	—	—
50 Hz	—	—	—
Unit Weight (for pump type P2 only)	130.5 lb (59.2 kg)	130.5 lb (59.2 kg)	175.5 lb (79.6 kg)
Voltage Options			
115 V/60 Hz & 100 V/50 Hz[1,2]	Available	Available	—
100 V/60 Hz & 100 V/50 Hz[1,2]	Available	Available	—
208-230 V/60 Hz & 200 V/50 Hz[1,2]	Available	Available	Available
230 V/50 Hz[1]	Available	Available	Available
200-230 V/50-60 Hz Global Voltage[1,2]	Available	Available	Available
208-230 V/60 Hz/3 phase[1,2]	—	—	—
400 V/50 Hz/3 phase[1]	—	—	—
400-460 V/50-60 Hz/3 phase Global Voltage[1,2]	—	—	—
Standard Compliance (for all ThermoFlex recirculating chillers)	CE, CSA US 105974_C_000		[1] *CE compliant* [2] *CSA compliant*

Specifications obtained at sea level using water as the recirculating fluid, at a +20°C process setpoint, +25°C ambient condition, at nominal operating voltage. Other fluids, process temperatures, ambient temperatures, altitude or operating voltages will affect performance. Cooling capacity based on units with P2 pumps with no backpressure. Other pumps will affect cooling capacity performance. Specifications subject to change.

***Pressure values for centrifugal and turbine pumps are differential pressures between the inlet and the outlet of the unit.*






	NESLAB ThermoFlex 3500	NESLAB ThermoFlex 5000	NESLAB ThermoFlex 7500	NESLAB ThermoFlex 10000
Standard Temperature Range	+5°C to +40°C (+41°F to +104°F)	+5°C to +40°C (+41°F to +104°F)	+5°C to +40°C (+41°F to +104°F)	+5°C to +40°C (+41°F to +104°F)
Optional Temperature Range	+5°C to +90°C (+41°F to +194°F)	+5°C to +90°C (+41°F to +194°F)	+5°C to +90°C (+41°F to +194°F)	+5°C to +90°C (+41°F to +194°F)
Ambient Temperature Range	+10°C to +40°C (+50°F to +104°F)	+10°C to +40°C (+50°F to +104°F)	+10°C to +40°C (+50°F to +104°F)	+10°C to +40°C (+50°F to +104°F)
Temperature Stability	±0.1°C	±0.1°C	±0.1°C	±0.1°C
Standard Cooling Capacity				
60 Hz at +20°C	3500 W / 11953 BTU	5000 W / 17076 BTU	7500 W / 25575 BTU	10000 W / 34100 BTU
50 Hz at +20°C	3050 W / 10416 BTU	4400 W / 15027 BTU	6425 W / 21910 BTU	8500 W / 28985 BTU
Reservoir Volume	1.9 gallons (7.2 liters)	1.9 gallons (7.2 liters)	4.75 gallons (17.9 liters)	4.75 gallons (17.9 liters)
Refrigerant	R407C	R407C	R407C	R407C
Physical Dimensions (H x W x D)				
Air-Cooled	38.9 x 19.3 x 30.9 in (98.7 x 48.8 x 78.4 cm)	38.9 x 19.3 x 30.9 in (98.7 x 48.8 x 78.4 cm)	52.3 x 25.2 x 33.8 in (132.7 x 63.9 x 85.6 cm)	52.3 x 25.2 x 33.8 in (132.7 x 63.9 x 85.6 cm)
Water-Cooled	38.9 x 19.3 x 30.9 in (98.7 x 48.8 x 78.4 cm)	38.9 x 19.3 x 30.9 in (98.7 x 48.8 x 78.4 cm)	45.9 x 25.2 x 33.8 in (116.6 x 63.9 x 85.6 cm)	45.9 x 25.2 x 33.8 in (116.6 x 63.9 x 85.6 cm)
P1 — Positive Displacement Pump				
60 Hz	2.1 gpm @ 60 psig (7.9 lpm @ 4.1 bar)	—	—	—
50 Hz	1.7 gpm @ 60 psig (6.4 lpm @ 4.1 bar)	—	—	—
P2 — Positive Displacement Pump				
60 Hz	4.0 gpm @ 60 psig (15.1 lpm @ 4.1 bar)	4.0 gpm @ 60 psig (15.1 lpm @ 4.1 bar)	4.0 gpm @ 60 psig (15.1 lpm @ 4.1 bar)	4.0 gpm @ 60 psig (15.1 lpm @ 4.1 bar)
50 Hz	3.3 gpm @ 60 psig (12.5 lpm @ 4.1 bar)	3.3 gpm @ 60 psig (12.5 lpm @ 4.1 bar)	3.3 gpm @ 60 psig (12.5 lpm @ 4.1 bar)	3.3 gpm @ 60 psig (12.5 lpm @ 4.1 bar)
T1 — Turbine Pump**				
60 Hz	3.5 gpm @ 60 psid (13.2 lpm @ 4.1 bar)	3.5 gpm @ 60 psid (13.2 lpm @ 4.1 bar)	—	—
50 Hz	2.5 gpm @ 60 psid (9.5 lpm @ 4.1 bar)	2.5 gpm @ 60 psid (9.5 lpm @ 4.1 bar)	—	—
P3 — Centrifugal Pump**				
60 Hz	10 gpm @ 32 psid (37.9 lpm @ 2.2 bar)	10 gpm @ 32 psid (37.9 lpm @ 2.2 bar)	10 gpm @ 32 psid (37.9 lpm @ 2.2 bar)	10 gpm @ 32 psid (37.9 lpm @ 2.2 bar)
50 Hz	10 gpm @ 20 psid (37.9 lpm @ 1.4 bar)	10 gpm @ 20 psid (37.9 lpm @ 1.4 bar)	10 gpm @ 20 psid (37.9 lpm @ 1.4 bar)	10 gpm @ 20 psid (37.9 lpm @ 1.4 bar)
P4 — Centrifugal Pump**				
60 Hz	15 gpm @ 57 psid (56.8 lpm @ 3.9 bar)	15 gpm @ 57 psid (56.8 lpm @ 3.9 bar)	—	—
50 Hz	15 gpm @ 34 psid (56.8 lpm @ 2.3 bar)	15 gpm @ 34 psid (56.8 lpm @ 2.3 bar)	—	—
P5 — Centrifugal Pump**				
60 Hz	—	—	20 gpm @ 60 psid (75.7 lpm @ 4.1 bar)	20 gpm @ 60 psid (75.7 lpm @ 4.1 bar)
50 Hz	—	—	20 gpm @ 35 psid (75.7 lpm @ 2.4 bar)	20 gpm @ 35 psid (75.7 lpm @ 2.4 bar)
Unit Weight (for pump type P2 only)	264 lb (120 kg)	264 lb (120 kg)	356 lb (161.5 kg)	356 lb (161.5 kg)
Voltage Options				
115 V/60 Hz & 100 V/50 Hz[1,2]	—	—	—	—
100 V/60 Hz & 100 V/50 Hz[1,2]	—	—	—	—
208-230 V/60 Hz & 200 V/50 Hz[1,2]	Available	Available	—	—
230 V/50 Hz[1]	Available	Available	—	—
200-230 V/50-60 Hz Global Voltage[1,2]	Available	Available	—	—
208-230 V/60 Hz/3 phase[1,2]	—	—	Available	Available
400 V/50 Hz/3 phase[1]	—	—	Available	Available
400-460 V/50-60 Hz/3 phase Global Voltage[1,2]	—	—	Available	Available
Standard Compliance (for all ThermoFlex recirculating chillers)	CE, CSA US 105974_C_000		[1] *CE compliant* [2] *CSA compliant*	

Specifications obtained at sea level using water as the recirculating fluid, at a +20°C process setpoint, +25°C ambient condition, at nominal operating voltage. Other fluids, process temperatures, ambient temperatures, altitude or operating voltages will affect performance. Cooling capacity based on units with P2 pumps with no backpressure. Other pumps will affect cooling capacity performance. Specifications subject to change.

***Pressure values for centrifugal and turbine pumps are differential pressures between the inlet and the outlet of the unit.*

Pumping Capacity

Pumping Capacity for Positive Displacement Pump Options (P1 & P2)

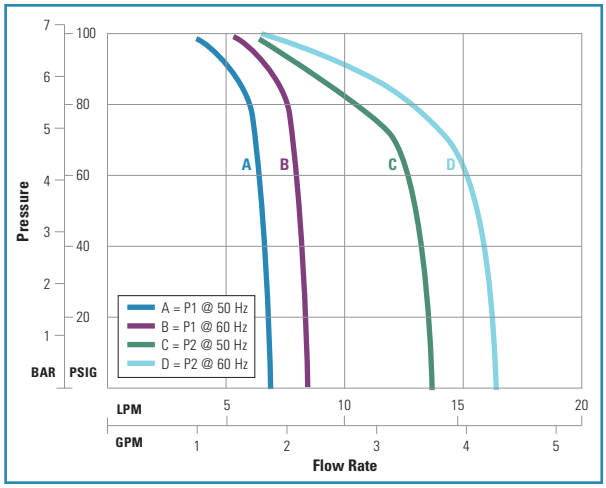

Pumping Capacity for Turbine Pump Option (T1)*

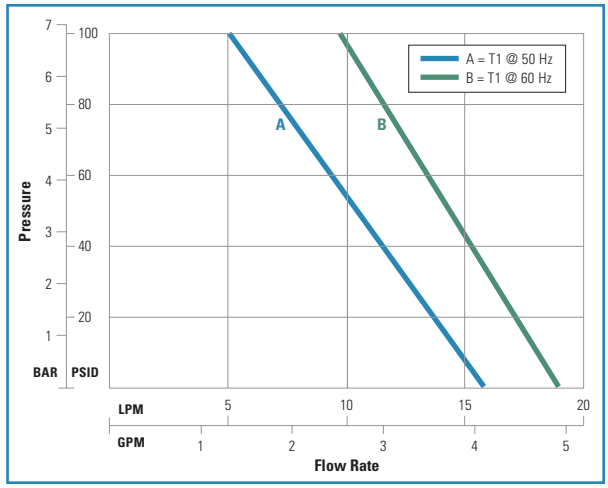

Pumping Capacity for Centrifugal Pump Options (P3 & P4)*

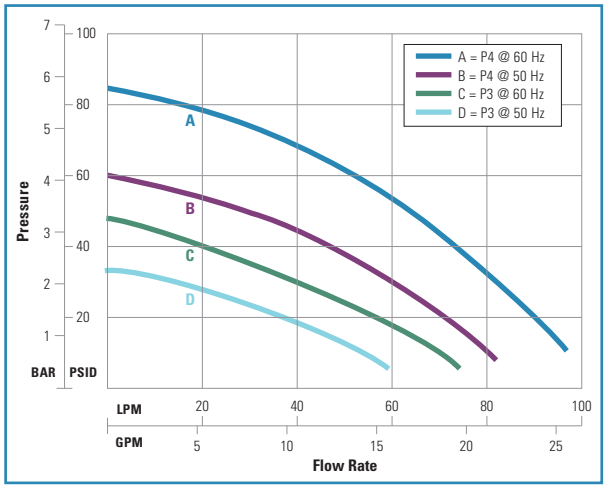

Pumping Capacity for Centrifugal Pump Option (P5)*

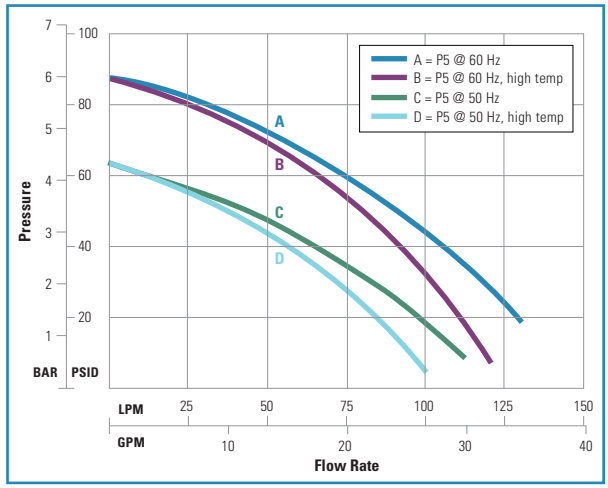

**Pressure values for turbine and centrifugal pumps are differential pressures between the inlet and the outlet of the unit.*
Cooling capacity based on units with P2 pumps with no backpressure. Other pumps will affect cooling capacity performance.

For more information about Thermo Scientific NESLAB recirculating chillers, visit www.thermo.com/thermoflex, or see our comprehensive range of temperature control equipment at www.thermo.com/tcprocess.

© 2009 Thermo Fisher Scientific Inc. All rights reserved. All trademarks are the property of Thermo Fisher Scientific Inc. and its subsidiaries. Results may vary under different operating conditions. Specifications, terms and pricing are subject to change. Not all products are available in all countries. Please consult your local sales representative for details.

North America: USA/Canada tollfree: +1 (800) 258-0830; USA: +1 (603) 436-9444 or info.tc.us@thermofisher.com
Europe: Benelux: +31 (0) 76 579 55 55 or info.tc.nl@thermofisher.com; France: +33 (0) 1 60 92 48 00 or info.tc.fr@thermofisher.com; Germany: +49 (0) 721 4 09 44 44 or info.tc.de@thermofisher.com; United Kingdom: +44 (0) 1785 82 52 00 or info.tc.uk@thermofisher.com
Asia: China: +86 (21) 68 65 45 88 or info.tc.china@thermofisher.com; India: +91 (22) 27 78 11 01 or info.tc.in@thermofisher.com

Thermo Scientific ThermoFlex™ Recirculating Chillers (Deluxe Controller)

Thermo Scientific Manual P/N U00939
Rev. 08/01/2016

C US

Multilingual Quick Start Guides

Multilingual Essential Safety Instructions

Installation

Operation

Preventive Maintenance

Troubleshooting

Visit our Web site at:

http://www.thermoscientific.com/tc
Product Service Information, Applications Notes, SDS Forms, e-mail.

Voice Info: (800) 258-0830

Label 1

Label 2

Thermo Scientific ThermoFlex™

Recirculating Chillers

(Deluxe Controller)

Thermo Scientific Manual P/N U00939
Rev. 08/01/2016

C US

Multilingual Quick Start Guides

Multilingual Essential Safety Instructions

Installation

Operation

Preventive Maintenance

Troubleshooting

Visit our Web site at:

http://www.thermoscientific.com/tc
Product Service Information, Applications Notes, SDS Forms, e-mail.

Voice Info: (800) 258-0830

Thermo Fisher Scientific

25 Nimble Hill Road
Newington, NH 03801
Tel : (800) 258-0830 or
(603) 436-9444
Fax : (603) 436-8411
www.thermoscientific.com/tc

Sales, Service, and Customer Support

25 Nimble Hill Road
Newington, NH 03801
Tel: (800) 258-0830
Sales: 8:00 am to 5:00 pm
Service and Support: 8:00 am to 6:00 pm
Monday through Friday (Eastern Time)
Fax: (603) 436-8411
service.tc.us@thermofisher.com

Dieselstrasse 4
D-76227 Karlsruhe, Germany
Tel : +49 (0) 721 4094 444
Fax : +49 (0) 721 4094 300
info.tc.de@thermofisher.com

Building 6, No. 27
Xin Jinqiao Rd., Shanghai 201206
Tel : +86(21) 68654588
Fax : +86(21) 64457830
info.china@thermofisher.com

Statement of Copyright
Copyright © 2016 Thermo Fisher Scientific. All rights reserved.
This manual is copyrighted by Thermo Fisher Scientific.
Users are forbidden to reproduce, republish, redistribute, or resell any materials from this manual in either machine-readable form or any other form.

Contents

Quick Start

Preface ..... **i**
Compliance i
WEEE i
After-Sale Support ii
Feedback ii
Warranty ii
Unpacking ii

Section 1 **Safety** **1-1**
Warnings 1-1

Section 2 **General Information** **2-1**
Description 2-1
Specifications 2-1

Section 3 **Installation** **3-1**
Site Requirements 3-1
Electrical Requirements 3-2
Hard Wire Installation 3-9
Plumbing Requirements 3-10
Process Fluid Requirements 3-12
Compatibility with Approved Fluids 3-13
Additional Fluid Information 3-15
Process Water Quality - Standards and Recommendations 3-15
Facility Water Requirements - Standards and Recommendations 3-16
Facility Water Requirements (water-cooled chillers) 3-17
Fluid Filter Bag 3-19
Priming 3-19
Initial Filling Requirements 3-20
Fluid Top Off 3-21

Section 4 **Operation** **4-1**
Deluxe Controller 4-1
Setup 4-2
Initial Start Up 4-2
Daily Start Up 4-3
Process Fluid Temperature Display 4-4
SETPOINT 4-5
Status Display 4-6
MENU Display 4-7
Main Menu Tree 4-8
Shut Down 4-21

Section 5 Additional Options/Accessories 5-1
Auto Refill 5-1
Internal DI Cartridge 5-2
P1 P2 T1 Pump Pressure Relief Valve (Internal Configuration) 5-3
P1 P2 T1 Pump Pressure Relief Valve (External Configuration) 5-4
Flow Control with Flow Readout 5-5
P1 P2 T1 Pump Pressure Relief with Flow Readout 5-5
T5 Pump Flow Control 5-6
Anti Drainback 5-6
SEMI 5-6
Other Accessories 5-10

Section 6 Preventive Maintenance 6-1
Preventive Maintenance Timer 6-1
DIAGNOSTIC 6-2
Fluid Bag Filter 6-3
Fluid Diffuser 6-3
Fluid Maintenance 6-4
Reservoir Cleaning 6-4
Condenser Filter 6-5
Chiller Surface 6-6
Hoses 6-6
Testing the Alarm Features 6-7
DI Filter (Optional) 6-7
Preventive Maintenance Messages 6-8

Section 7 Troubleshooting 7-1
Messages 7-1
Faults and Warnings 7-1
Safety Alarm 7-9
Error 7-10
MESSAGES 7-11
Checklist 7-12
TUNING 7-14

Section 8 Additional Information 8-1
Draining 8-1
CALIBRATION 8-3
Wetted Materials 8-4
Decommissioning/Disposal 8-5
Shipment/Storage 8-5

Appendix A Country Specific 230 VAC, 50 Hz, 1 Ø Requirements

Appendix B Voltage Configuration Instructions

Appendix C Serial Communications

Appendix D Analog I/O and Remote Sensor

Declaration of Conformity

WARRANTY

This quick start guide is intended for initial start up only. For all other procedures you must refer to the manual. Also, if any of these steps are not clear download the manual before proceeding.

- The chiller is designed for indoor use only. Never place the chiller in a location with excessive heat, moisture, inadequate ventilation, or corrosive materials.
- Connect the chiller to a properly grounded outlet.
- Refrigerants used are heavier than air and will replace the oxygen causing loss of consciousness. Contact with leaking refrigerant will cause skin burns. Refer to the chiller's nameplate and the manufacturer's most current MSDS.
- Move the chiller with care. Sudden jolts or drops can damage its components. Always turn the equipment off and disconnect it from its supply voltage before moving it.
- Never operate damaged or leaking equipment.
- If your chiller is equipped with a positive displacement pump (P1 or P2), ensure your application plumbing lines and fittings are rated to withstand a minimum of 185 psi.
- Do not use a Deionization (DI) filter cartridge with Inhibited EG or Inhibited PG. A DI filter will remove inhibitors from the solution rendering the fluid ineffective against corrosion protection.
- Use only the approved fluids shown in Table 1. Before using any fluid or performing maintenance where contact with the fluid is likely, refer to the manufacturer's MSDS for handling precautions.
- To prevent freezing/glazing of the plate exchanger, ThermoFlex7500-10000 chillers require the use of 50/50 EG/water or 50/50 PG/water below 10°C process temperature.

Table 1 - Approved Fluids:
Use of any other fluid will void the manufacturer's warranty.

Standard Temp Chillers	High Temp Chillers
Filtered/single distilled water (pH 7-8)	Filtered/single distilled water (pH 7-8)*
Deionized water (1-3 MΩ-cm, compensated)	0 – 50% Laboratory Grade Ethylene Glycol/Water
Distilled water with Nalco biocide and inhibitor	0 – 50% Laboratory Grade Propylene Glycol/Water
Distilled water with chlorine (5 ppm)	*to 88°C for chillers with P1 and P2 pumps
0 – 75% Laboratory Grade Ethylene Glycol/Water	*to 90°C for all other chillers
0 – 75% Laboratory Grade Propylene Glycol/Water	

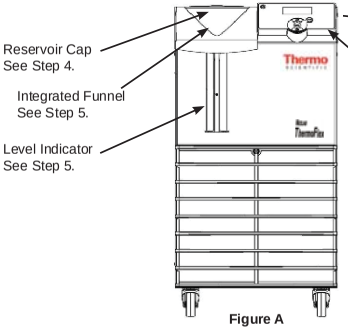

Figure A

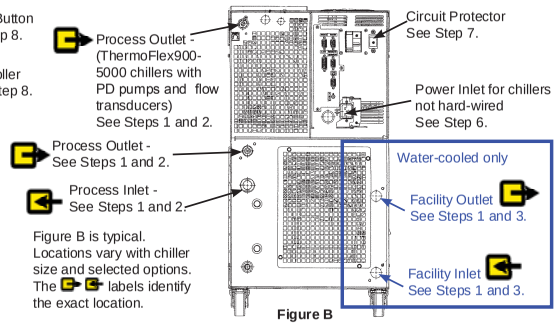

Figure B is typical. Locations vary with chiller size and selected options. The labels identify the exact location.

Figure B

What you need to get started:
- An adjustable wrench
- Facility water supply and return (water-cooled chillers)
- Appropriate hose or plumbing
- Appropriate size clamps or connection type
- Teflon® Tape or appropriate sealant

Facility Water Connections (FNPT)
ThermoFlex1400 - 5000 Inlet/Outlet ½" cast bronze
ThermoFlex7500 - 10000 Inlet/Outlet ¾" cast bronze

Process Fluid Connections (FNPT)		
Outlet		
ThermoFlex900 - 10000	P1 P2 T0 T1	1/2" cast bronze
ThermoFlex3500 - 5000	P3 P4	3/4" cast bronze
ThermoFlex7500 - 10000	P3 P5 T5	1" wrought copper
Inlet - Same size as outlet		all chillers stainless steel
Supplied Adapters		
P1 P2 T0 T1	1/2" x 3/8" Polyethylene and 1/2" x 1/2" Nylon	
P3 P4	3/4 MPT x 1/2 barb PVC	
P3 P5 T5	1" MPT x 1" barb PVC and 1" MPT x 3/4" barb PVC	

1 Remove all the plastic shipping plugs (2 or 4).

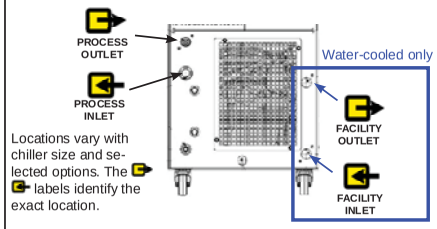

Locations vary with chiller size and selected options. The labels identify the exact location.

See Figure B.

2 Connect the ThermoFlex PROCESS OUTLET (A) to the fluid inlet on your application. Connect the ThermoFlex PROCESS INLET (B) to the fluid outlet on your application. Ensure the connections are sealed and secure. For air-cooled chillers skip to Step 4.

Never connect process fluid lines to your facility water supply or to any pressurized liquid source.



See Figure B.

3 Connect the ThermoFlex FACILITY OUTLET (A) to a facility water return or drain. Connect the ThermoFlex FACILITY INLET (B) to a facility water supply. Ensure the connections are sealed and secure.

For water-cooled only.

Facility Water Maximum Inlet Pressure must not exceed 150 PSIG. Facility Water Maximum Pressure Differential must not exceed 50 PSID.

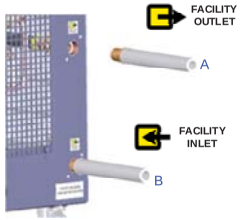

See Figure B.

4 Refer to the name plate on the rear of the chiller and verify the appropriate voltage. For chillers supplied with a line cord, insert female end of line cord into chiller and then insert male end of line cord into power outlet. (The line cord is located under the shipping crate's lid. Do not discard the lid until the cord is located.)



Never operate the chiller with a damaged line cord.

Note: ThermoFlex900-5000 chillers equipped with the Variable Voltage or Global Voltage option have a voltage configuration panel. Refer to the Voltage Instruction Sheet shipped with the chiller, or see manual Appendix B.

Note: For chillers requiring hard wiring see Section 3 in the manual.

See Figure B.

5 If equipped, place the optional GFCI breaker located on the rear to the up position. For ThermoFlex900 through 10000 chillers, place the circuit protector to the on (I) position.

The circuit protector is not intended to act as a disconnecting means.



See Figure B.

6 **Never operate the chiller without process fluid in the reservoir or without the fluid filter bag installed.**
Gently pull up on the plastic funnel housing to remove it and install the supplied filter bag. Reinstall the housing.

Remove the reservoir cap from the housing by unscrewing it counterclock-wise.



See Figure A.

7 *Slowly* fill reservoir with clean process fluid (see Table 1), utilizing sight tube for easy fluid level monitoring. When the reservoir is full re-place the reservoir cap, hand tight. Since the reservoir capacity may be small compared to your application and air may need to be purged from the lines, have extra fluid on hand to keep the system topped off when external circulation is started.If the fluid level drops too low the chiller will shut down to prevent the pump from running dry. Acknowledge the alarm and re-start the priming process.



Note: Be careful not to fill the reservoir above MAX LEVEL fill line. This will result in a unit over flow error (**Over Flow**) which will cause the chiller to shut down.

See Figure A.

8 Press .

The controller will display **QUICK START**.

Note: Before proceeding, if the chiller is equipped with a deionization filter cartridge, refer to Section 5 in the manual for installation procedure.

Please see reverse side for additional information.

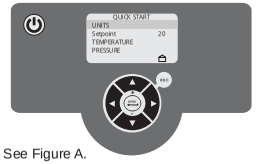

See Figure A.



QUICK START	
UNITS	
Setpoint	20
TEMPERATURE	
PRESSURE	
FLUID LEVEL	
AUTO REFILL*	
FLOW*	
Line Frequency*	60HZ
☐ Auto Restart	
☐ Audible Alarms	
RA FAN SPEED MODE*	
Care Level	1
SERIAL COMM - DCOM*	
ANALOG COMM - ACOM*	
RESISTIVITY*	
mm/dd/yy	hh:mm:ss
◀ Quick Start Done	

*Displays only on chillers equipped with the option.

NOTE Any setting can be changed after the chiller is started.

The controller can display only six lines of the QUICK START menu at a time.

Use the down arrow to scroll through and highlight each line. If a change to any of the default settings is needed, with the desired line highlighted press the enter button.

If the text on any setting is all capital letters, the setting has a sub-menu. Pressing enter will bring up the sub-menu. The sub-menus allow you to view/change the applicable values.

After pressing enter the line will start to flash indicating the value can be changed using the up/down arrows. Once the desired value is displayed, press enter again to stop the flashing and accept the new value. When all the desired changes are made press the left arrow or esc key to return to the QUICK START menu.

If the chiller exceeds the fault value it will shut down, the controller will display a fault message and, if enabled, sound the alarm. If the chiller exceeds the warning value the chiller will continue to run, the controller will display a warning message and, if enabled, sound the alarm.

Lines that are not all capital letters indicate the changes can be made directly on the QUICK START menu, i.e. Setpoint and Line Frequency. Use the same procedure to change these values.

If the line has a blank box, i.e. Auto Restart, pressing enter with that line highlighted will turn the box black. A black box indicates the feature is enabled. Press enter again to turn the box blank. A blank box indicates the feature is disabled.

Display	Indication	Range	Default
UNITS	Controller temperature, pressure and flow display scales. (Flow display is optional.)	C or F psi, bar or kPa	C psi
		gpm or lpm	gpm
Setpoint	Setpoint value.	+5°C to +40°C (+5°C to +90° for high temp chillers)	+20°C
TEMPERATURE	Temperature fault and warning values.	+2°C to +43°C (+93°C for high temp chillers)	High +42°C (+92°C for high temp chillers) Low +3°C
PRESSURE	Pressure fault, warning and time delay values.	Pump dependent - refer to Table 1	Pump dependent - refer to Table 1
	(The delay sets the length of time needed after a pressure fault before the chiller shuts down.)	Time Delay: 0 to 30 seconds	High Time Delay: 0 seconds (60 seconds for P3 - P5 pumps) Low Time Delay: 10 seconds
FLUID LEVEL	Reservoir low level fault and warning values.	Heater dependent - refer to Table 3	Heater dependent - refer to Table 3
AUTO REFILL	Optional auto refill values. (On is the % of fluid level in the reservoir needed to turn refill on. Time Out is the maximum time the option will operate. Setting the time to 0 disables the option.)	On: 70%- 100% Time Out: 0 - 900 seconds	Heater dependent, see manual
FLOW	Process fluid flow fault and warning values.	Pump dependent - refer to Table 2	Pump dependent - refer to Table 2
Line Frequency	The incoming frequency (Chillers with a P3 - P5 pump *and* the capability to run on either 50 Hz or 60 Hz only. The selected frequency automatically adjusts the firmware's fixed high pressure default setting.)	50 Hz or 60 Hz	60 Hz
Auto Restart	Enables the auto restart.	☐ or ■	☐
Audible Alarms	Enables the audible alarm.	☐ or ■	☐
RA FAN SPEED MODE	Fan speed. ThermoFlex2500 air-cooled chillers only (Auto allows the fan to run under the conditions listed in the manual, see Section 3. On allows the fan to run at high speed all the time.)	On or Auto	Auto
Care Level	The preventive care cleaning frequency reminder for the unit's air and fluid filters.	off, 1 (1000 hours), 2 (2000 hours) 3 (3000 hours)	1
SERIAL COMM - DCOM	Optional serial communications. (See manual for additional information.)	Off, RS232, RS485	Off
ANALOG COMM - ACOM	Optional analog communications. (See manual for additional information.)	Refer to manual	
RESISTIVITY	Enables/configures the resistivity option. (See manual for additional information.)	☐ or ■ Setpoint: 0.2 to 3.0 MΩ-cm Interval: 0.1 to 0.5 MΩ-cm Warning High: 0.0 to 3.5 MΩ-cm Warning Low: 0.0 to 3.5 MΩ-cm	☐ Setpoint: 1.0 MΩ-cm Interval: 0.1 MΩ-cm Warning High: 3.0 MΩ-cm Warning Low: 0.5 MΩ-cm
mm/dd/yy	Sets the date. Some error messages display the date of occurrence.		
hh:mm:ss	Sets the time. Some error messages display the time of occurrence.		
Quick Start Done	To end the quick start procedure and save changes press the enter button. To leave the quick start and not save press the left arrow or esc button. In either case the screen will go blank.		

Table 1	Fault Range	High Default	Low Default
T0 T1 P1 P2 Pumps:	3 to 105 PSI	105 PSI	3 PSI
T5 Pumps:	2 to 105 PSI	105 PSI	4 PSI
P3 P4 P5 Pumps:	See Manual	See Manual	4 PSI

Table 2	Range	High Default	Low Default
T0 T1 P1 P2 Pumps:	0.0 to 10.5 GPM	0.0 GPM	0.0 GPM
T5 Pumps:	0.0 to 15.0 GPM	0.0 GPM	0.0 GPM
P3 P4 P5 Pumps:	0.0 to 30.0 GPM	0.0 GPM	0.0 GPM

Table 3		
Heater	Warning Range	Default
None	6 - 100%	6%
1 kW:	58 - 100%	58%
2.3 kW:	69 - 100%	69%
5.0 kW:	87 - 100%	87%
4.6 kW:	87 - 100%	87%
Heater	Fault Range	Default
None	0 - 100%	0%
1 kW:	52 - 100%	52%
2.3 kW:	63 - 100%	63%
5.0 kW:	81 - 100%	81%
4.6 kW:	81 - 100%	81%

Ce guide de démarrage rapide est destiné à la mise en marche initiale uniquement. Pour toute autre procédure, merci de vous référer au manuel. De plus, si l'une de ses étapes ne vous paraît pas claire, téléchargez le manuel avant de commencer.

Sécurité :

- Les refroidisseurs ont été conçus pour fonctionner uniquement à l'intérieur. Ne jamais exposer le refroidisseur à une chaleur ou une humidité excessive, à une ventilation inadéquate ou à des matières corrosives.
- Brancher le refroidisseur à une prise correctement reliée à la terre.
- Les réfrigérants utilisés sont plus lourds que l'air et peuvent remplacer l'oxygène, provoquant ainsi une perte de conscience. Tout contact avec des réfrigérants qui fuient peut provoquer des brûlures cutanées. Pour plus d'informations, se reporter à la plaque signalétique du refroidisseur et à la Fiche de données de sécurité (MSDS) du fabricant la plus couramment utilisée.
- Déplacer le refroidisseur avec soin. Les secousses soudaines et les chutes peuvent endommager ses composants. À chaque déplacement de l'équipement, toujours le mettre hors tension et le débrancher de son alimentation.
- Ne jamais utiliser un équipement endommagé ou qui présente des fuites.
- Si le refroidisseur est équipé d'une pompe à déplacement positif (P1 ou P2), s'assurer que les conduites de plomberie et les raccords de l'application peuvent supporter au moins 185 psi.
- Ne pas utiliser de cartouche de filtre de déionisation (DI) avec EG ou PG inhibés. Un filtre DI retiendra les inhibiteurs de la solution, rendant le liquide inefficace sur la protection contre la corrosion. Les inhibiteurs augmenteront également la conductivité du liquide.
- Utiliser uniquement les liquides approuvés et énumérés dans le Tableau 1. Avant d'utiliser un quelconque liquide ou d'effectuer des travaux d'entretien susceptibles d'entraîner un contact avec le liquide, se rapporter à la Fiche de données de sécurité du fabricant.
- Pour éviter toute congélation/glaçage de l'échangeur à plaques, les refroidisseurs ThermoFlex7500-10000 requièrent l'utilisation d'EG/eau 50/50 ou de PG/eau 50/50 à une température inférieure de 10°C à celle du traitement.

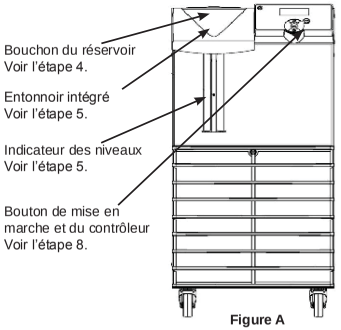

Figure A

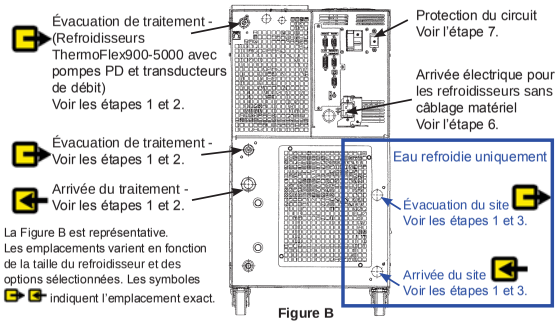

Figure B

Matériel nécessaire pour commencer :

- Une clé à molette
- Alimentation et évacuation d'eau du site (pour les refroidisseurs refroidis par eau)
- Tuyau et accessoires de plomberie appropriés
- Colliers de serrage ou raccords de connexion de dimension appropriée
- Ruban adhésif au Teflon® ou produit étanchéifiant approprié

Raccordements à l'eau du site (FNPT)

ThermoFlex1400 - 5000 Arrivée/Sortie fonte de bronze 0,5"

ThermoFlex7500 - 10000 Arrivée/Sortie fonte de bronze 0,75"

Tableau 1 - Liquides approuvés :

Tout autre liquide annule la garantie du fabricant.

Refroidisseurs température standard	
Eau filtrée/mono-distillée (pH 7-8)	
Eau déionisée (1 à 3 MΩ-cm, compensée)	
Eau distillée avec biocide Nalco et ses inhibiteurs	
Eau distillée avec chlore (5 ppm)	
Éthylène glycol de qualité laboratoire/eau 0 à 75 %	
Propylène glycol de qualité laboratoire/eau 0 à 75 %	
Refroidisseurs haute température	
Eau filtrée (pH 7-8)*	
Éthylène glycol de qualité laboratoire/eau 0 à 50%	
Propylène glycol de qualité laboratoire/eau 0 à 50%	
*jusqu'à 88°C pour les refroidisseurs équipés des pompes P1 et P2	
*jusqu'à 90°C pour les refroidisseurs équipés d'autres pompes	

Raccordements du fluide de traitement (FNPT)

Sortie

TFlex900 - 10000	P1 P2 T0 T1	fonte de bronze 0,5"
TFlex3500 - 5000	P3 P4	fonte de bronze 0,75 "
TFlex7500 - 10000	P3 P5 T5	cuivre forgé 1"

Arrivée - Taille identique à la sortie de tous les refroidisseurs en acier inoxydable

Adaptateurs fournis

P1 P2 T0 T1	Polyéthylène 0,5" x 0,375" et Nylon 0,5" x 0,5"
P3 P4	MPT 0,75 x PVC cannelé 0,5
P3 P5 T5	MPT 1" x PVC cannelé 1" et MPT 1" x PVC cannelé 0,75"

1 Retirer tous les bouchons d'expédition en plastique (2 ou 4).

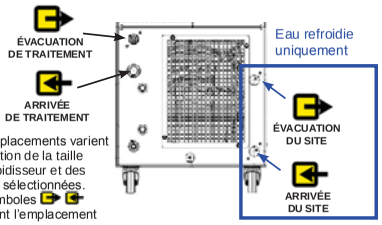

Les emplacements varient en fonction de la taille du refroidisseur et des options sélectionnées. Les symboles indiquent l'emplacement exact.

Voir la Figure B.

2 Raccorder L'ÉVACUATION DE TRAITEMENT ThermoFlex (A) à l'arrivée de liquide de l'application. Raccorder L'ARRIVÉE DE TRAITEMENT ThermoFlex (B) à l'évacuation de liquide de l'application. Vérifier que les raccords sont étanches et sûrs. Pour les refroidisseurs refroidis par air, passer à l'étape 4.

Ne jamais raccorder les conduites de liquide de traitement à l'arrivée d'eau de votre site ou à une source de liquide sous pression.

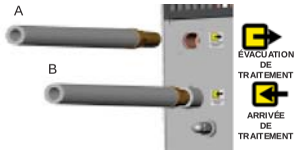

Voir la Figure B.

3 Raccorder L'ÉVACUATION DU SITE ThermoFlex (A) à une évacuation d'eau du site. Raccorder L'ARRIVÉE DU SITE ThermoFlex (B) à une arrivée d'eau du site. Vérifier que les raccords sont étanches et sûrs.

Uniquement pour les refroidisseurs refroidis à l'eau.

La pression maximale d'arrivée d'eau du site doit être inférieure à 150 PSIG. Le différentiel maximal de pression d'eau du site doit être inférieur à 50 PSID.

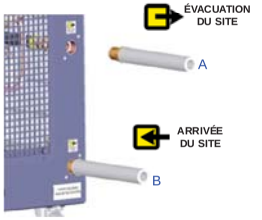

Voir la Figure B.

4 Se reporter à la plaque signalétique située à l'arrière du refroidisseur et vérifier que la tension est correcte. Pour les refroidisseurs fournis avec un cordon d'alimentation, insérer l'extrémité femelle de ce dernier dans le refroidisseur, et l'extrémité mâle dans la prise électrique. (Le cordon d'alimentation se trouve sous le couvercle de la caisse d'expédition. Ne pas jeter le couvercle avant d'avoir localisé le cordon.)



Ne jamais faire fonctionner un refroidisseur dont le cordon d'alimentation est endommagé.

Remarque : Les refroidisseurs ThermoFlex900-5000 équipés des options de tension variable ou de tension globale possèdent un panneau de configuration de la tension. Se référer à la fiche d'instructions relative à la tension livrée avec le refroidisseur ou consulter l'annexe B du manuel.

Remarque : Pour les refroidisseurs exigeant un câblage matériel, consulter la Section 3 du manuel.

Voir la Figure B.

5 Si le refroidisseur en est équipé, armer le disjoncteur GFCI en option et situé à l'arrière de l'appareil en position haute. Pour les refroidisseurs ThermoFlex900 jusqu'à 10000, mettre le dispositif de protection du circuit sur la position (I).

Le dispositif de protection du circuit n'a pas été conçu pour déconnecter les appareils.



Voir la Figure B.

6 **Ne jamais utiliser le refroidisseur sans liquide dans le réservoir et/ou sans avoir installé le filtre sac.**

Merci de tirer avec précaution sur la partie plastique du cache type entonnoir pour l'enlever et ensuite installer le filtre sac foumi. Une fois cette opération achevée, merci de repositionner le cache type entonnoir.



Voir la Figure A.

7 Remplir *lentement* le réservoir avec du liquide de traitement propre (voir le Tableau 1) en utilisant le regard pour contrôler facilement le niveau de liquide. Une fois le réservoir rempli, remettre le bouchon en le serrant à la main. La capacité du réservoir pouvant être réduite par rapport à l'application, et l'air devant être purgé des conduites, garder du liquide supplémentaire à portée de la main pour faire l'appoint du système une fois la circulation externe démarrée.

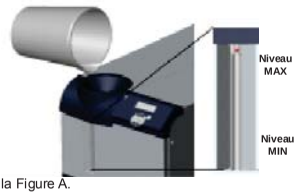

Remarque : Veiller à ne pas remplir le réservoir au-dessus de la ligne MAX LEVEL (NIVEAU MAX). Cela entraîne une erreur de débordement du refroidisseur (**Over Flow**) qui peut provoquer son arrêt.

Voir la Figure A.

8 Appuyer sur ⏻.

Le contrôleur affiche **QUICK START**.

Remarque : Si le refroidisseur est équipé d'une cartouche de filtre de déionisation, consulter le manuel, Section 5, pour l'installation.

Voir au dos les étapes supplémentaires.



Voir la Figure A.



MISE EN ROUTE RAPIDE	
UNITS (UNITÉS)	
Point de consigne	20
TEMPÉRATURE	
PRESSURE (PRESSION)	
FLUID LEVEL (NIVEAU DE LIQUIDE)	
REMPLISSAGE AUTOMATIQUE*	
DÉBIT*	
Fréquence de ligne*	60 Hz
☐ Auto Restart (Redémarrage automatique)	
☐ Alarmes sonores	
MODE DE VITESSE DE VENTILATION PR*	
Care Level (Niveau d'entretien)	1
COM SÉRIE - DCOM*	
COM ANALOGUE - ACOM*	
RÉSISTIVITÉ*	
mm/jj/aa	hh:mm:ss
◀Quick Start Done (Mise en route rapide effectuée)	

*Uniquement sur les refroidisseurs équipés de l'option.

REMARQUE Tous les réglages peuvent être modifiés une fois que le refroidisseur a démarré.

Le contrôleur ne peut afficher que six lignes du menu QUICK START à la fois.

Utiliser la flèche bas pour faire défiler et mettre en surbrillance chaque ligne. S'il est nécessaire de modifier l'un des réglages par défaut, mettre la ligne souhaitée en surbrillance puis appuyer sur le bouton Enter (Entrée).

Si le texte d'un réglage est complètement en majuscules, le réglage comporte un sous-menu. Appuyer sur le bouton Enter (Entrée) pour afficher le sous-menu. Les sous-menus vous permettent de visualiser/modifier les valeurs applicables.

Dès que l'on a appuyé sur le bouton Enter (Entrée), la ligne se met à clignoter pour indiquer que la valeur peut être modifiée à l'aide des flèches haut/bas. Une fois que la valeur souhaitée est affichée, appuyer de nouveau sur Enter (Entrée) pour faire cesser le clignotement et accepter la nouvelle valeur. Lorsque toutes les modifications souhaitées sont effectuées, appuyer sur la flèche gauche ou sur la touche Esc (Échap) pour revenir au menu QUICK START.

Si le refroidisseur dépasse la valeur de défaillance, il s'éteindra, le contrôleur affichera un message d'erreur et, si elle activée, l'alarme sonore se déclenchera. Si le refroidisseur dépasse la valeur d'avertissement, il continuera de fonctionner, le contrôleur affichera un message d'avertissement et, si elle activée, l'alarme sonore se déclenchera.

Les lignes qui ne comportent pas que des majuscules indiquent que les modifications peuvent être effectuées directement dans le menu QUICK START (exemple : Setpoint et Line Frequency). Suivre la même procédure pour modifier ces valeurs.

Si une ligne comporte une case vide (exemple : Auto Restart), le fait d'appuyer sur le bouton Enter (Entrée) avec la ligne concernée mise en surbrillance rendra la case noire. Une case noire indique que la fonction est activée. Appuyer de nouveau sur Enter (Entrée) pour que la case soit vide. Une case vide indique que la fonction est désactivée.

Affichage	Instructions	Plage	Valeur par défaut
UNITS	Échelles d'affichage du débit, de la pression et de la température du contrôleur. (L'affichage du débit est en option.)	C ou F psi, bar ou kPa	C psi
		gpm ou lpm	gpm
Setpoint	Valeur du point de consigne.	De +5°C à +40°C (De +5°C à +90°C pour les refroidisseurs haute température)	+20°C
TEMPERATURE	Valeurs de défaillance de la température et d'avertissement.	De +2°C à +43°C (+93°C pour les refroidisseurs haute température)	Élevée +42°C (+92°C pour les refroidisseurs haute température) Faible +3°C
PRESSURE	Valeurs de défaillance de la pression, d'avertissement et de laps de temps.	En fonction de la pompe ; se référer au Tableau 1	En fonction de la pompe ; se référer au Tableau 1
	(Le délai est défini par le temps nécessaire avant l'arrêt du refroidisseur suite à une défaillance de pression.)	Laps de temps : de 0 à 30 secondes	Laps de temps élevé : 0 secondes (60 secondes pour les pompes P3 à P5) Laps de temps faible : 10 secondes
FLUID LEVEL	Valeurs d'avertissement et de niveau faible dans le réservoir.	En fonction du chauffage ; se référer au Tableau 3	En fonction du chauffage ; se référer au Tableau 3
AUTO REFILL	Valeurs de remplissage automatique en option. (On correspond au pourcentage de niveau de liquide dans le réservoir nécessaire pour lancer le remplissage. Le délai d'expiration est la durée maximale pendant laquelle l'option va fonctionner. Paramétrer la durée sur 0 désactive l'option.)	On : de 70 % à 100 % Time Out : de 0 à 900 secondes	En fonction du chauffage, consulter le manuel
FLOW	Valeurs d'avertissement et de défaillance du processus de débit de liquide.	En fonction de la pompe ; se référer au Tableau 2	En fonction de la pompe ; se référer au Tableau 2
Line Frequency	Fréquence d'entrée (Refroidisseurs équipés d'une pompe P3 à P5 *et* ayant la capacité de fonctionner à 50 Hz ou à 60 Hz uniquement. La fréquence sélectionnée ajuste automatiquement le réglage de haute pression par défaut fixe du microprogramme.)	50 Hz ou 60 Hz	60 Hz
Auto Restart	Active le redémarrage automatique.	☐ ou ■	☐
Audible Alarms	Active l'alarme sonore.	☐ ou ■	☐
RA FAN SPEED MODE	Vitesse de ventilation. Refroidisseurs refroidis par air ThermoFlex2500 uniquement (Auto permet au ventilateur de fonctionner dans les conditions énumérées dans le manuel, voir la section 3. On permet au ventilateur de fonctionner tout le temps à vitesse élevée.)	On ou Auto	Auto
Care Level	Rappel de nettoyage d'entretien préventif pour les filtres à air et à liquide du refroidisseur.	Off, 1 (1 000 heures), 2 (2 000 heures) 3 (3 000 heures)	1
SERIAL COMM - DCOM	Communications série en option. (Consulter le manuel pour toute information complémentaire.)	Off, RS232, RS485	Off
ANALOG COMM - ACOM	Communications analogues en option. (Consulter le manuel pour toute information complémentaire.)	Se reporter au manuel	
RESISTIVITY	Active/Configure l'option de résistivité. (Consulter le manuel pour toute information complémentaire.)	☐ ou ■ Point de consigne : de 0,2 à 3,0 MΩ-cm Intervalle : de 0,1 à 0,5 MΩ-cm Avertissement élevé : de 0,0 à 3,5 MΩ-cm Avertissement faible : de 0,0 à 3,5 MΩ-cm	☐ Point de consigne : 1,0 MΩ-cm Intervalle : 0,1 MΩ-cm Avertissement élevé : 3,0 MΩ-cm Avertissement faible : 0,5 MΩ-cm
mm/dd/yy (mm/jj/aa)	Paramètre la date. Certains messages d'erreur affichent la date d'apparition.		
hh:mm:ss	Paramètre l'heure. Certains messages d'erreur affichent l'heure d'apparition.		
Quick Start Done	Pour terminer la procédure de mise en route rapide et enregistrer les modifications, appuyer sur le bouton Enter (Entrée). Pour quitter la mise en route rapide et ne pas enregistrer, appuyer sur la flèche gauche ou sur le bouton Esc (Échap). Dans les deux cas, l'écran deviendra vide.		

Tableau 1	Plage de défaillance	Valeur par défaut élevée	Valeur par défaut faible
Pompes T0 T1 P1 P2 :	de 3 à 105 PSI	105 PSI	3 PSI
Pompes T5 :	de 2 à 105 PSI	105 PSI	4 PSI
Pompes P3 P4 P5 :	Consulter le manuel	Consulter le manuel	4 PSI

Tableau 2	Plage	Valeur par défaut élevée	Valeur par défaut faible
Pompes T0 T1 P1 P2 :	de 0,0 à 10,5 GPM	0,0 GPM	0,0 GPM
Pompes T5 :	de 0,0 à 15,0 GPM	0,0 GPM	0,0 GPM
Pompes P3 P4 P5 :	de 0,0 à 30,0 GPM	0,0 GPM	0,0 GPM

Tableau 3 Chauffage	Plage d'avertissement	Valeur par défaut
Aucun	6 - 100 %	6 %
1 kW :	58 - 100 %	58 %
2,3 kW :	69 - 100 %	69 %
5,0 kW :	87 - 100 %	87 %
4,6 kW :	87 - 100 %	87 %
Chauffage	**Plage de défaillance**	**Valeur par défaut**
Aucun	0 - 100 %	0 %
1 kW :	52 - 100 %	52 %
2,3 kW :	63 - 100 %	63 %
5,0 kW :	81 - 100 %	81 %
4,6 kW :	81 - 100 %	81 %

Diese Kurzanleitung ist nur für die erste Inbetriebnahme vorgesehen. Für alle anderen Verfahren müssen Sie im Handbuch nachsehen. Auch wenn irgendwelche Schritte unverständlich sind, laden Sie das Handbuch herunter, bevor Sie fortfahren.

Sicherheit:

- Das Kühlgerät darf nur in geschlossenen Räumen betrieben werden. Stellen Sie das Kühlgerät niemals an Orten auf, wo es übermäßiger Hitze, Feuchtigkeit, unzureichender Belüftung oder korrosiven Stoffen ausgesetzt ist.
- Schließen Sie das Kühlgerät an eine ordnungsgemäß geerdete Steckdose an.
- Da die verwendeten Kühlmittel schwerer als Luft sind und den Sauerstoff verdrängen, kann es zu Bewusstlosigkeit kommen. Der Kontakt mit auslaufendem Kühlmittel kann Hautverbrennungen verursachen. Weitere Informationen finden Sie auf dem Typenschild des Kühlgerätes sowie im aktuellen Sicherheitsdatenblatt (SDB) des Herstellers.
- Bewegen Sie das Kühlgerät vorsichtig. Plötzliche Erschütterungen oder Stürze können seine Bauteile beschädigen. Schalten Sie das Gerät immer ab und trennen Sie es von der Versorgungsspannung, bevor Sie das Gerät bewegen.
- Betreiben Sie niemals beschädigte oder undichte Geräte.
- Falls Ihr Kühlgerät mit einer Verdrängerpumpe (P1 oder P2) ausgestattet ist, stellen Sie sicher, dass die Leitungen und Anschlüsse einem Druck von mindestens 185 psi/12,8 bar standhalten.
- Verwenden Sie keine Deionisierungs (DI)-Filterkartusche bei inhibiertem EG oder inhibiertem PG. Mit einem DI-Filter werden Inhibitoren aus der Lösung entfernt und dadurch wird die Korrosionsschutzwirkung der Flüssigkeit aufgehoben. Inhibitoren erhöhen auch die Leitfähigkeit der Flüssigkeit.
- Verwenden Sie nur die in Tabelle 1 gezeigten zugelassenen Flüssigkeiten. Beachten Sie die im Sicherheitsdatenblatt des Herstellers beschriebenen Vorsichtsmaßnahmen, bevor Sie Flüssigkeiten einsetzen oder eine Wartung durchführen, bei der Sie möglicherweise mit Flüssigkeiten in Berührung kommen..
- Um ein Einfrieren bzw. Vereisen des Plattenwärmetauschers zu vermeiden, müssen bei Betriebstemperaturen unter 10 °C für ThermoFlex7500-10000 Kühlgeräte 50/50 EG/Wasser oder 50/50 PG/Wasser verwendet werden.

Tabelle 1 – Zugelassene Flüssigkeiten:

Jede andere Flüssigkeit führt zum Verlust der Herstellergarantie.

Standardtemperaturkühlgeräte
Filtriertes/einfach destilliertes Wasser (pH 7–8)
Deionisiertes Wasser (1–3 MΩ-cm, kompensiert)
Destilliertes Wasser mit Nalco Biozid und Inhibitor
Destilliertes Wasser mit Chlor (5 ppm)
0 – 75 % Ethylenglykol/Wasser in Laborqualität
0 – 75 % Propylenglykol/Wasser in Laborqualität
Hochtemperaturkühlgeräte
Filtriertes Wasser (pH 7–8)*
0 – 50% Ethylenglykol/Wasser in Laborqualität
0 – 50% Propylenglykol/Wasser in Laborqualität
*bis 88 °C für Kühlgeräte mit P1- und P2-Pumpen *bis 90 °C für Kühlgeräte mit anderen Pumpen

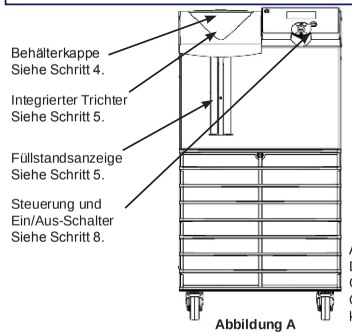

Abbildung A

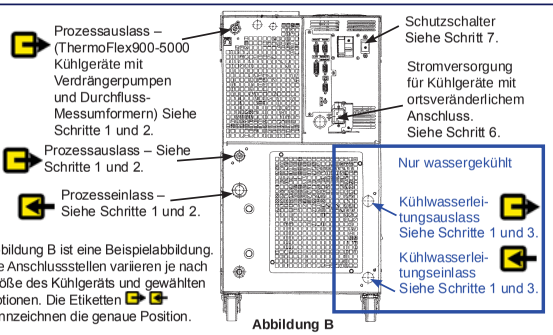

Abbildung B ist eine Beispielabbildung. Die Anschlussstellen variieren je nach Größe des Kühlgeräts und gewählten Optionen. Die Etiketten kennzeichnen die genaue Position.

Abbildung B

Sie benötigen für die Inbetriebnahme:

- Einen verstellbaren Schraubenschlüssel
- Leitungswasserzu- und -ablauf (wassergekühlte Kühlgeräte)
- Passende Schläuche bzw. Leitungen
- Passende Klemmen oder Anschlussstücke
- Teflon®-Band oder geeignete Dichtungen

Kühlwasserleitungsanschlüsse (FNPT)

ThermoFlex1400 – 5000 Einlass/Auslass ½" Gussbronze

ThermoFlex7500 – 10000 Einlass/Auslass ¾" Gussbronze

Anschlüsse für Prozessflüssigkeiten (FNPT)

Auslass		
TFlex900 – 10000	P1 P2 T0 T1	1/2" Gussbronze
TFlex3500 – 5000	P3 P4	3/4" Gussbronze
TFlex7500 – 10000	P3 P5 T5	1" geschmiedetes Kupfer
Einlass – Gleiche Größe wie Auslass alle Kühlgeräte		Edelstahl

Mitgelieferte Adapter

P1 P2 T0 T1	1/2" x 3/8" Polyethylen und 1/2" x 1/2" Nylon
P3 P4	3/4 Außengewinde x 1/2 PVC-Verbindungsstück
P3 P5 T5	1" Außengewinde x 1" PVC-Verbindungsstück und 1" Außengewinde x 3/4" PVC-Verbindungsstück

1 Entfernen Sie alle Kunststoff-Versandstopfen (2 oder 4).

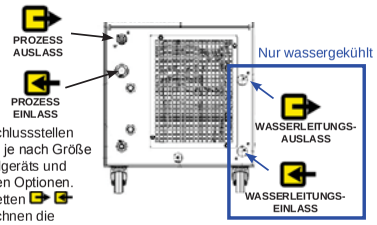

Die Anschlussstellen variieren je nach Größe des Kühlgeräts und gewählten Optionen. Die Etiketten kennzeichnen die genaue Position.

Siehe Abbildung B.

2 Verbinden Sie den ThermoFlex PROZESSAUSGANG (A) mit dem Flüssigkeitseingang Ihrer Applikation. Verbinden Sie den ThermoFlex PROZESSEINGANG (B) mit dem Flüssigkeitsausgang Ihrer Applikation. Überprüfen Sie, dass die Verbindungen dicht und gesichert sind. Luftgekühlte Kühlgeräte: Weiter mit Schritt 4.

Schließen Sie niemals Prozess-flüssigkeitsleitungen an die Kühlwasser-versorgung oder an einen Anschluss für unter Druck stehende Flüssigkeiten an.

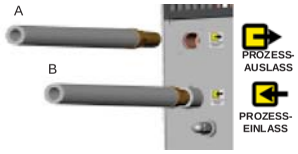

Siehe Abbildung B.

3 Verbinden Sie den ThermoFlex KÜHLWASSERLEITUNGSAUSLASS (A) mit Ihrem Wasserrücklauf oder -abfluss. Verbinden Sie den ThermoFlex KÜHLWASSERLEITUNGSEINLASS (B) mit einer Wasserleitung. Überprüfen Sie, dass die Verbindungen dicht und gesichert sind.

Nur wassergekühlt.

Der maximale Einlassdruck des Kühlwassers darf 10,35 bar nicht überschreiten. Die maximale Druckdifferenz des Kühlwassers darf 3,4 bar nicht überschreiten.

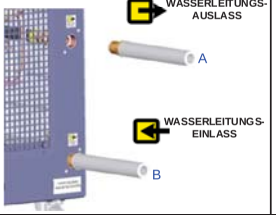

Siehe Abbildung B.

4 Kontrollieren Sie, ob die korrekte Spannung eingestellt ist, die Sie auf dem Typenschild auf der Rückseite des Kühlgerätes finden. Stecken Sie bei Kühlgeräten mit Stromkabel zunächst das geräteseitige Ende in das Kühlgerät und anschließend den Stecker in eine Steckdose. (Das Stromkabel befindet sich unter dem Deckel der Transportkiste. Werfen Sie den Deckel nicht weg, bevor Sie das Stromkabel gefunden haben.)


Siehe Abbildung B.

Betreiben Sie das Kühlgerät niemals mit einem beschädigten Stromkabel.

Hinweis: ThermoFlex900-5000 Kühlgeräte mit der Option Variabler Spannungsbereich verfügen über ein Bedienfeld zur Konfiguration der Spannung. Siehe mitgelieferte Anweisung zum Einstellen der Spannung oder Anhang B im Handbuch.

Hinweis: Für Kühlgeräte, bei denen ein Festanschluss erforderlich ist, siehe Abschnitt 3 im Handbuch.

5 Falls vorhanden, stellen Sie den optionalen FI-Schutzschalter in die obere Position. Bei ThermoFlex900 bis 10000 Kühlgeräten stellen Sie den Schalter in die Position Ein (I).

Der Schutzschalter ist nicht zum Ausschalten des Gerätes vorgesehen.



Siehe Abbildung B.

6 **Betreiben Sie niemals den Kühler ohne Prozess Flüssigkeit im Behälter oder ohne installiertem Flüssigkeit Filterbeutel** .



Ziehen Sie vorsichtig an dem Kunststofftrichter Gehäuse um es zu entfernen und installieren

Sie die mitgelieferte Filter-beutel. Danach bauen sie das Gehäuse wieder zusammen.

Siehe Abbildung A.

7 Befüllen Sie den Behälter *langsam* mit sauberer Prozessflüssigkeit (siehe Tabelle 1) und kontrollieren Sie den Füllstand über die Füllstandsanzeige. Wenn der Behälter voll ist, schrauben Sie die Behälterkappe handfest auf. Da möglicherweise die Kapazität des Behälters im Vergleich zu Ihrer Applikation eher gering ist und Luft aus den Leitungen gespült werden muss, sollten Sie weitere Flüssigkeit zum Nachfüllen bereithalten, wenn der externe Kreislauf gestartet wird.



Siehe Abbildung A.

Hinweis: Achten Sie darauf, den Behälter nicht über die Markierung MAX LEVEL zu befüllen. Dies führt zu einem Überlauf-Fehler (Over Flow) und somit zu einer Abschaltung des Kühlgerätes.

8 Drücken Sie auf ⏻.

Daraufhin zeigt die Steuerung **Quick Start (SCHNELLSTART)** an.

Hinweis: Falls das Kühlgerät mit einer Deionisierungs-Filterkartusche ausgestattet ist, finden Sie Hinweise zum Einsetzen in Abschnitt 5 des Handbuchs.

Weitere Schritte siehe Rückseite.

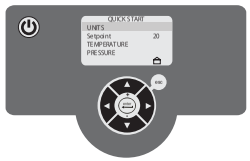

Siehe Abbildung A.



QUICK START (SCHNELLSTART)	
UNITS (EINHEITEN)	
Setpoint (Sollwert)	**20**
TEMPERATURE (TEMPERATUR)	
PRESSURE (DRUCK)	
FLUID LEVEL (FÜLLSTAND)	
AUTO REFILL (AUTOM. NACHFÜLLUNG)*	
FLOW (FLUSS)*	
Line Frequency (Netzfrequenz)*	**60HZ**
☐ **Auto Restart (Autom. Neustart)**	
☐ **Audible Alarms (Akustische Alarme)**	
RA FAN SPEED MODE (RA-LÜFTERDREHZAHL-MODUS)*	
Care Level (Wartungserinnerung)	**1**
SERIAL COMM – DCOM (SERIELLE KOMMUNIKATION – DCOM)	
ANALOG COMM – ACOM (ANALOGE KOMMUNIKATION – ACOM)*	
RESISTIVITY (WIDERSTAND)*	
mm/dd/yy (mm/tt/jj)	**hh:mm:ss**
◀ **Quick Start Done (Schnellstart beenden)**	

* Wird nur auf Kühlern angezeigt, die mit dieser Option ausgestattet sind.

HINWEIS Alle Einstellungen können nach dem Starten des Kühlers geändert werden.

Auf dem Regler werden maximal sechs Zeilen des Menüs QUICK START (SCHNELLSTART) gleichzeitig angezeigt.

Mit dem Pfeil nach unten können Sie die Zeilen durchblättern und markieren. Wenn eine Standardeinstellung geändert soll, markieren Sie die gewünschte Zeile, und drücken Sie ENTER.

Ist eine Einstellung in Großbuchstaben geschrieben, steht ein Untermenü zur Verfügung. Mit ENTER öffnen Sie das Untermenü. In den Untermenüs können Sie die entsprechenden Werte abrufen bzw. ändern.

Sobald Sie ENTER drücken, beginnt die Zeile zu blinken. Dies bedeutet, dass der Wert nun mit dem Pfeil nach oben und unten geändert werden kann. Blättern Sie zum gewünschten Wert, und drücken Sie erneut ENTER. Die Einstellung blinkt nicht mehr, und der neue Wert ist festgelegt. Wenn Sie alle gewünschten Änderungen vorgenommen haben, drücken Sie den Pfeil nach links oder ESC. Damit gelangen Sie zum Menü QUICK START (SCHNELLSTART) zurück.

Überschreitet der Kühler den Fehlerwert, wird das Gerät ausgeschaltet. Auf dem Regler wird eine Fehlermeldung angezeigt, und ein akustischer Alarm ertönt (sofern dieser aktiviert ist). Überschreitet der Kühler den Warnwert, bleibt das Gerät weiterhin eingeschaltet. Auf dem Regler wird eine Warnmeldung angezeigt, und ein akustischer Alarm ertönt (sofern dieser aktiviert ist).

Bei Zeilen, die nicht vollständig in Großbuchstaben angezeigt werden, können Sie die Änderungen direkt im Menü QUICK START (SCHNELLSTART) vornehmen. Dies gilt für die Optionen „Setpoint“ (Sollwert) und „Line Frequency“ (Netzfrequenz). Diese Werte lassen sich auf dieselbe Weise wie die anderen Einstellungen ändern.

Ist in der Zeile ein leeres Kästchen sichtbar, z. B. bei „Auto Restart“ (Autom. Neustart), wird das Kästchen schwarz, sobald Sie die betreffende Zeile markieren und ENTER drücken. Ein schwarzes Kästchen bedeutet, dass die zugehörige Funktion aktiviert ist. Wenn Sie erneut ENTER drücken, wird wieder ein leeres Kästchen angezeigt. Ein leeres Kästchen bedeutet, dass die zugehörige Funktion deaktiviert ist.

Anzeige	Inhalt	Bereich	Standardwert
UNITS (EINHEITEN)	Einheiten für die Temperatur-, Druck- und Flussanzeige auf dem Regler. (Die Flussanzeige ist optional.)	C oder F psi, bar oder kPa	C psi
		gpm oder lpm	gpm
Setpoint (Sollwert)	Sollwert.	+5 °C bis +40 °C (+90 °C bei Hochtemperaturkühlern)	+20 °C
TEMPERATURE (TEMPERATUR)	Fehler- und Warnwerte für die Temperatur.	+2 °C bis +43 °C (+93 °C bei | Hochtemperaturkühlern)	High (Obergrenze): +42 °C (+92 °C bei Hochtemperaturkühlern) Low (Untergrenze): +3 °C
PRESSURE (DRUCK)	Fehler-, Warn- und Zeitverzögerungswerte für den Druck. (Die Verzögerung bestimmt den Zeitraum, nach dessen Ablauf der Kühler ausgeschaltet wird, wenn ein fehlerhafter Druck vorliegt.)	Je nach Pumpe; siehe Tabelle 1	Je nach Pumpe; siehe Tabelle 1
		Time Delay (Zeitverzögerung): 0–30 Sekunden	High Time Delay (Obergrenze für Zeitverzögerung): 0Sekunden(60Sekunden bei P3- bis P5-Pumpen) Low Time Delay (Untergrenze für Zeitverzögerung): 10 Sekunden
FLUID LEVEL (FÜLLSTAND)	Fehler- und Warnwerte für niedrigen Füllstand im Behälter.	Je nach Heizung; siehe Tabelle 3	Je nach Heizung; siehe Tabelle 3
AUTO REFILL (AUTOM. NACHFÜLLUNG)	Optionale Werte für die automatische Nachfüllung. („On“ [Ein] bezeichnet den Prozentsatz des Füllstands im Behälter, bei dem die Nachfüllung eingeschaltet wird. „Time Out“ [Zeitüberschreitung] bezeichnet den maximalen Zeitraum, über den diese Option aktiv sein soll. Wird dieser Zeitraum auf 0 gesetzt, so wird die Option deaktiviert.)	On (Ein): 70–100 % Time Out (Zeitüberschreitung): 0–900 Sekunden	Je nach Heizung; siehe Handbuch
FLOW (FLUSS)	Fehler- und Warnwerte für den Fluss der Prozessflüssigkeit.	Je nach Pumpe, siehe Tabelle 2	Je nach Pumpe, siehe Tabelle 2
Line Frequency (Netzfrequenz)	Eingangsfrequenz (Kühler mit P3- bis P5-Pumpe *und* Möglichkeit zum Betrieb mit 50 Hz oder 60 Hz. Über die gewählte Frequenz wird die festgelegte Überdruck-Standardeinstellung der Firmware automatisch justiert.)	50 Hz oder 60 Hz	60 Hz
Auto Restart (Autom. Neustart)	Ermöglicht den automatischen Neustart.	☐ oder ■	☐
Audible Alarms (Akustische Alarme)	Aktiviert akustische Alarme.	☐ oder ■	☐
RA FAN SPEED MODE (RA-LÜFTER-DREHZAHL-MODUS)	Lüfterdrehzahl. Nur für luftgekühlte Kühler Modell ThermoFlex2500. (Ermöglicht den automatischen Betrieb des Lüfters gemäß den im Handbuch aufgeführten Bedingungen; siehe Abschnitt 3. Bei „On“ [Ein] läuft der Lüfter durchgängig mit der höchsten Drehzahl.)	„On“ (Ein) oder „Auto“	Auto
Care Level (Wartungserinnerung)	Erinnerung an die Reinigung der Luft- und Flüssigkeitsfilter des Geräts im Rahmen der vorbeugenden Wartung.	Off (Aus), 1 (1000 Stunden), 2 (2000 Stunden) 3 (3000 Stunden)	1
SERIAL COMM – DCOM (SERIELLE KOMMUNIKATION – DCOM)	Optionale serielle Kommunikation. (Weitere Informationen siehe Handbuch.)	Off (Aus), RS232, RS485	Off (Aus)
ANALOG COMM – ACOM (ANALOGE KOMMUNIKATION – ACOM)	Optionale analoge Kommunikation. (Weitere Informationen siehe Handbuch.)	Siehe Handbuch.	
RESISTIVITY (WIDERSTAND)	Aktiviert/konfiguriert die Option für den Widerstand. (Weitere Informationen siehe Handbuch.)	☐ oder ■ Setpoint (Sollwert): 0,2–3,0 MΩ-cm Interval (Intervall): 0,1–0,5 MΩ-cm Warning High (Obere Warngrenze): 0,0–3,5 MΩ-cm Warning Low (Untere Warngrenze): 0,0–3,5 MΩ-cm	☐ Setpoint (Sollwert): 1,0 MΩ-cm Interval (Intervall): 0,1 MΩ-cm Warning High (Obere Warngrenze): 3,0 MΩ-cm Warning Low (Untere Warngrenze): 0,5 MΩ-cm
mm/dd/yy (mm/tt/jj)	Stellt das Datum ein. In einigen Fehlermeldungen wird das Datum des Fehlers angezeigt.		
hh:mm:ss	Stellt die Uhrzeit ein. In einigen Fehlermeldungen wird die Uhrzeit des Fehlers angezeigt.		
Quick Start Done (Schnellstart beenden)	Zum Beenden des Schnellstartverfahrens und zum Speichern der Änderungen drücken Sie ENTER. Um den Schnellstart abzubrechen ohne zu speichern, drücken Sie den Pfeil nach links oder ESC. In beiden Fällen schaltet sich die Bildschirmanzeige aus.		

Tabelle 1	Fehlerbereich	Standard-Obergrenze	Standard-Untergrenze
T0-, T1-, P1-, P2-Pumpe:	3–105 psi	105 psi	3 psi
T5 Pumpe:	2–105 psi	105 psi	4 psi
P3-, P4-, P5-Pumpe	Siehe Handbuch	Siehe Handbuch	4 psi

Tabelle 2	Bereich	Standard-Obergrenze	Standard-Untergrenze
T0-, T1-, P1-, P2-Pumpe:	0,0–10,5 gpm	0,0 gpm	0,0 gpm
T5 Pumpe:	0,0–15,0 gpm	0,0 gpm	0,0 gp
P3-, P4-, P5-Pumpe:	0,0–30,0 gpm	0,0 gpm	0,0 gpm

Tabelle 3 Heizung	Warnbereich	Standardwert
Keine	6–100 %	6 %
1 kW:	58–100 %	58 %
2,3 kW:	69–100 %	69 %
5,0 kW:	87–100 %	87 %
4,6 kW:	87–100 %	87 %
Heizung	**Fehlerbereich**	**Standardwert**
Keine	0–100 %	0 %
1 kW:	52–100 %	52 %
2,3 kW:	63–100 %	63 %
5,0 kW:	81–100 %	81 %
4,6 kW:	81–100 %	81 %

Scopo di questa guida rapida è facilitare la messa in funzione iniziale. Per tutte le altre procedure è necessario fare riferimento al manuale. Se alcuni dei passaggi qui riportati non risultano chiari, scaricare il manuale prima di proseguire.

Sicurezza:

- Il refrigeratore è progettato esclusivamente per l'uso al chiuso. Non posizionare mai il refrigeratore in un ambiente a temperature eccessivamente alte, umido, con ventilazione inadeguata o materiali corrosivi.
- Attaccare il refrigeratore a una presa correttamente collegata a massa.
- I refrigeranti utilizzati sono più pesanti dell'aria e sostituiranno l'ossigeno causando la perdita di coscienza. Il contatto con refrigeranti fuoriusciti causa ustioni della pelle. Per ulteriori informazioni, fare riferimento alla targhetta identificativa del refrigeratore e alla scheda di sicurezza dei materiali (MSDS) più recente.
- Spostare il refrigeratore con cautela. Cadute o urti improvvisi possono danneggiarne i componenti. Spegnere sempre l'apparecchiatura e scollegarla dalla tensione di alimentazione, prima di spostarla.
- Non azionare apparecchiature danneggiate o che presentano perdite.
- Se il refrigeratore è dotato di pompa volumetrica (P1 o P2), verificare che le tubazioni idrauliche e i raccordi previsti per l'applicazione siano progettati per sostenere una pressione minima di 185 psi.
- Non utilizzare una cartuccia filtro per deionizzazione (DI) con etilenglicole o propilenglicole inibito. Il filtro DI rimuove gli inibitori dalla soluzione rendendo il liquido inefficace contro la protezione dalla corrosione. Inoltre, gli inibitori aumentano la conduttività del liquido.
- Utilizzare solo i liquidi approvati riportati nella tabella 1. Prima di utilizzare liquidi o eseguire eventuali interventi di manutenzione che potrebbero implicare il contatto con il liquido, fare riferimento alle schede di sicurezza dei materiali (MSDS) del produttore per le precauzioni d'uso.
- Per impedire il congelamento dello scambiatore di calore a piastre, i refrigeratori ThermoFlex7500-10000 richiedono l'uso di 50/50 di etilenglicole/acqua o propilenglicole/acqua per temperature di processo inferiori a 10°C.

Tabella 1 - Liquidi approvati:

L'uso di qualsiasi altro liquido annullerà la garanzia del produttore.

Refrigeratori a temperature standard

- Acqua distillata/filtrata (pH 7-8)
- Acqua deionizzata (1-3 MΩ-cm, compensata)
- Acqua distillata con biocida o inibitore Nalco
- Acqua distillata con cloro (5 ppm)
- 0 – 75% etilenglicole/acqua per laboratorio
- 0 – 75% propilenglicole/acqua per laboratorio

Refrigeratori a temperature elevate

- Acqua filtrata (pH 7-8)*
- 0 – 50% etilenglicole/acqua per laboratorio
- 0 – 50% propilenglicole/acqua per laboratorio

*a 88°C per refrigeratori con pompe P1 e P2
*a 90°C per refrigeratori con altre pompe

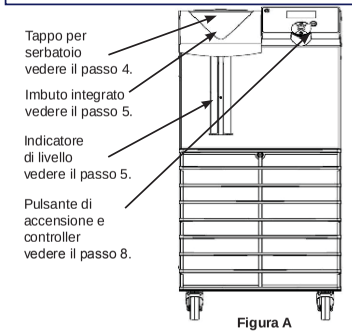

Figura A

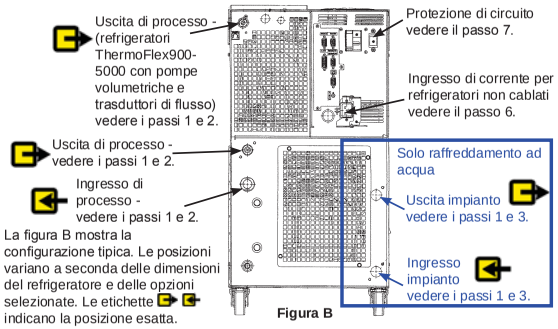

La figura B mostra la configurazione tipica. Le posizioni variano a seconda delle dimensioni del refrigeratore e delle opzioni selezionate. Le etichette indicano la posizione esatta.

Figura B

Elementi necessari per la messa in funzione:

- Una chiave regolabile
- Alimentazione e ritorno acqua dell'impianto (refrigeratori ad acqua)
- Tubazioni rigide o flessibili idonee
- Tipo di raccordi o dimensioni fascette adeguati
- Nastro adesivo Teflon® o sigillante idoneo

Raccordi acqua dell'impianto (FNPT)

ThermoFlex1400 - 5000 Ingressi/uscite in bronzo fuso da ½"

ThermoFlex7500 - 10000 Ingressi/uscite in bronzo fuso da ¾"

Raccordi per liquidi di processo (FNPT) - Uscita

TFlex900 - 10000	P1 P2 T0 T1	in bronzo fuso da 1/2"
TFlex3500 - 5000	P3 P4	in bronzo fuso da 3/4"
TFlex7500 - 10000	P3 P5 T5	in rame lavorato da 1"

Ingresso - stessa dimensione dell'uscita, in acciaio inossidabile per tutti i refrigeratori

Adattatori forniti

P1 P2 T0 T1	in polietilene da 1/2" x 3/8" e in nylon da 1/2" x 1/2"
P3 P4	MPT 3/4 x raccordo dentato in PVC 1/2
P3 P5 T5	MPT 1" x raccordo dentato in PVC 1" e MPT 1" x raccordo dentato in PVC 3/4"

1 Rimuovere tutti i tappi di spedizione (2 o 4).

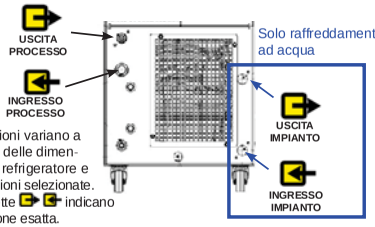

Le posizioni variano a seconda delle dimensioni del refrigeratore e delle opzioni selezionate. Le etichette indicano la posizione esatta.

Vedere la figura B.

2 Collegare l'USCITA DI PROCESSO ThermoFlex (A) all'ingresso liquidi per l'applicazione. Collegare l'INGRESSO DI PROCESSO ThermoFlex (B) all'uscita liquidi per l'applicazione.

Verificare che i raccordi siano bel saldi e sigillati. Per i refrigeratori ad aria andare al passo 4.

Non collegare le tubazioni dei liquidi di processo all'alimentazione d'acqua dell'impianto o a qualsiasi altra sorgente di liquido pressurizzato.

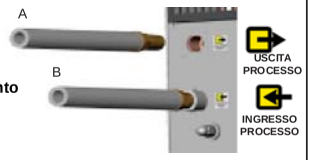

Vedere la figura B.

3 Collegare l'USCITA IMPIANTO ThermoFlex (A) a una tubazione di ritorno o scarico dell'acqua dell'impianto. Collegare l'INGRESSO IMPIANTO ThermoFlex (B) all'alimentazione acqua dell'impianto. Verificare che i raccordi siano bel saldi e sigillati.

Solo per il raffreddamento ad acqua.

La pressione di ingresso massima dell'acqua dell'impianto non deve superare i 150 PSIG. Il differenziale di pressione massimo dell'acqua dell'impianto non deve superare i 50 PSID.

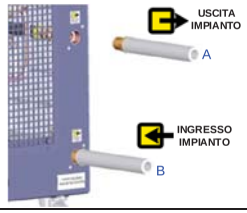

Vedere la figura B.

4 Fare riferimento alla targhetta identificativa sul retro del refrigeratore e verificare la tensione corretta. Per i refrigeratori forniti con un cavo di alimentazione, inserire l'estremità femmina del cavo nel refrigeratore e l'estremità maschio nella presa di corrente. (Il cavo di alimentazione si trova sotto il coperchio della cassa per la spedizione. Non gettare il coperchio fino a quando non si trova il cavo.)



Non azionare il refrigeratore con un cavo di alimentazione danneggiato.

Nota: i refrigeratori ThermoFlex900-5000 dotati dell'opzione di tensione variabile o globale hanno un pannello di configurazione della tensione. Fare riferimento al foglio delle istruzioni relative alla tensione spedito con il refrigeratore o vedere l'Appendice B al manuale.

Nota: per i refrigeratori che richiedono il cablaggio vedere la sezione 3 del manuale.

Vedere la figura B.

5 Se in dotazione, portare l'interruttore GFCI opzionale situato sul retro nella posizione sollevata. Per i refrigeratori compresi tra ThermoFlex900 e 10000, portare la protezione di circuito nella posizione attiva (I).

La protezione di circuito non è progettata per agire come strumento di scollegamento.



Vedere la figura B.

6 Non utilizzare mai il chiller senza il liquido di raffreddamento nel serbatoio o senza avere installato il sacchetto filtro.

Estrarre con cautela l'alloggiamento in plastica dell'imbuto per rimuoverlo e installare il sacchetto filtro in dotazione. Reinstallare nuovamente l'alloggiamento.



Vedere la figura A.

7 Riempire *lentamente* il serbatoio con liquido di processo pulito (vedere la tabella 1), utilizzando il tubo spia per controllare facilmente il livello del liquido. Quando il serbatoio è pieno, riapplicare il tappo e serrare a mano. Poiché la capacità del serbatoio potrebbe essere inferiore al necessario per l'applicazione interessata e l'aria potrebbe essere spurgata dalle tubazioni, tenere a portata di mano del liquido extra per rabboccare il sistema all'avvio del ricircolo esterno.



Nota: fare attenzione a non riempire il serbatoio al di sopra della tacca di livello MAX. Ciò determinerà la generazione di un errore di troppo pieno che causerà l'arresto del refrigeratore.

Vedere la figura A.

8 Premere .

Sul controller viene visualizzato **QUICK START**.

Nota: se il refrigeratore viene dotato di una cartuccia filtro per deionizzazione fare riferimento alla sezione 5 del manuale per informazioni sull'installazione.

Consultare il retro per ulteriori procedure.

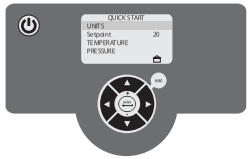

Vedere la figura A.

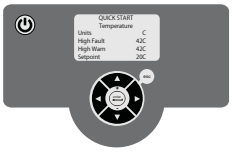

QUICK START	
UNITS	
Setpoint	20
TEMPERATURE	
PRESSURE	
FLUID LEVEL	
AUTO REFILL*	
FLOW*	
Line Frequency*	60HZ
☐ Auto Restart	
☐ Audible Alarms	
RA FAN SPEED MODE*	
Care Level	1
SERIAL COMM - DCOM*	
ANALOG COMM - ACOM*	
RESISTIVITY*	
mm/dd/yy	hh:mm:ss
◀Quick Start Done	

*Vengono visualizzati solo i refrigeratori dotati di tale opzione.

NOTA Le impostazioni possono essere modificate solo dopo l'avvio del refrigeratore.

Sul controller possono essere visualizzate solo sei righe del menu QUICK START alla volta.

Utilizzare la freccia giù per scorrere ed evidenziare ciascuna riga. Per modificare un'impostazione predefinita, evidenziare la riga interessata e premere il pulsante Enter.

Se il testo di un'impostazione è tutto in maiuscolo, è presente un sottomenu. Premendo il pulsante Enter viene visualizzato il sottomenu. I sottomenu consentono di visualizzare/modificare i valori applicabili.

Dopo aver premuto il pulsante Enter, la riga inizia a lampeggiare a indicare che il valore può essere modificato tramite le frecce su/giù. Una volta visualizzato il valore desiderato, premere nuovamente il pulsante Enter per non far lampeggiare più la riga e accettare il nuovo valore. Una volta apportate tutte le modifiche desiderate, premere la freccia sinistra o il tasto Esc per tornare al menu QUICK START.

Se il valore di guasto viene superato, il refrigeratore viene spento, sul controller viene visualizzato il messaggio di errore e, se abilitato, viene emesso l'allarme acustico. Se il valore di avviso viene superato, il refrigeratore continua a funzionare, sul controller viene visualizzato il messaggio di avviso e, se abilitato, viene emesso l'allarme acustico.

Le righe che non sono tutte in maiuscolo indicano che le modifiche possono essere apportate direttamente nel menu QUICK START (ad esempio, Setpoint e Line Frequency). Utilizzare la stessa procedura per modificare questi valori.

Se la riga contiene un quadratino bianco (ad es., Auto Restart), premendo il pulsante Enter con quella riga evidenziata, il quadratino diventa nero. Un quadratino nero indica che la funzione è abilitata. Premere nuovamente Enter per visualizzare nuovamente il quadratino bianco. Un quadratino bianco indica che la funzione è disabilitata.

Display	Significato	Intervallo	Impostazione predefinita
UNITS	Scale di visualizzazione di temperatura, pressione e flusso del controller. (La visualizzazione del flusso è opzionale.)	C o F psi, bar o kPa	C psi
		gpm o lpm	gpm
Setpoint	Valore di impostazione.	Da +5°C a +40°C (Da +5°C a +90° per refrigeratori a temperature elevate)	+20°C
TEMPERATURE	Valori guasto o avviso temperatura.	Da +2°C a +43°C (+93°C per refrigeratori a temperature elevate)	Valore alto +42°C (+92°C per refrigeratori temp. elevate) Valore basso +3°C
PRESSURE	Valori guasto, avviso e ritardo pressione. (Il ritardo imposta il tempo ammesso dopo un guasto di pressione prima che il refrigeratore venga spento.)	Variabile in base alla pompa - fare riferimento alla tabella 1	Variabile in base alla pompa - fare riferimento alla tabella 1
		Time Delay: Da 0 a 30 secondi	High Time Delay: 0 secondi (60 secondi per pompe P3 - P5) Low Time Delay: 10 secondi
FLUID LEVEL	Valori guasto e avviso basso livello di liquido nel serbatoio.	Variabile in base al riscaldatore - fare riferimento alla tabella 3	Variabile in base al riscaldatore - fare riferimento alla tabella 3
AUTO REFILL	Valori di rabbocco automatico opzionale. (On è la % di livello del liquido nel serbatoio necessaria per attivare il rabbocco. Time Out è il tempo massimo di esecuzione dell'opzione. Impostando il tempo su 0 l'opzione viene disabilitata.)	On: 70% - 100% Time Out: 0 - 900 secondi	Variabile in base al riscaldatore, vedere il manuale
FLOW	Valori guasto e avviso flusso liquido di processo.	Variabile in base alla pompa - fare riferimento alla tabella 2	Variabile in base alla pompa - fare riferimento alla tabella 2
Line Frequency	La frequenza in entrata (refrigeratori con una pompa P3 - P5 *e* capacità di funzionamento solo a 50 Hz o 60 Hz. La frequenza selezionata regola automaticamente l'impostazione predefinita dell'alta pressione fissa del firmware.)	50 Hz o 60 Hz	60 Hz
Auto Restart	Consente il riavvio automatico.	☐ o ■	☐
Audible Alarms	Attiva l'allarme acustico.	☐ o ■	☐
RA FAN SPEED MODE	Velocità ventola. Solo refrigeratori ThermoFlex2500 raffreddati ad aria (Auto consente il funzionamento della ventola nelle condizioni indicate nel manuale, vedere la sezione 3. On consente il funzionamento della ventola sempre ad alta velocità.)	On o Auto	Auto
Care Level	Il promemoria di frequenza manutenzione preventiva di pulizia per i filtri aria e liquido del refrigeratore.	off, 1 (1000 ore), 2 (2000 ore) 3 (3000 ore)	1
SERIAL COMM - DCOM	Comunicazioni seriali opzionali. (Per ulteriori informazioni, vedere il manuale.)	Off, RS232, RS485	Off
ANALOG COMM - ACOM	Comunicazioni analogiche opzionali. (Per ulteriori informazioni, vedere il manuale.)	Fare riferimento al manuale	
RESISTIVITY	Attiva/configura l'opzione di resistività. (Per ulteriori informazioni, vedere il manuale.)	☐ o ■ Setpoint: Da 0,2 a 3,0 MΩ-cm Interval: Da 0,1 a 0,5 MΩ-cm Warning High: Da 0,0 a 3,5 MΩ-cm Warning Low: Da 0,0 a 3,5 MΩ-cm	☐ Setpoint: 1,0 MΩ-cm Interval: 0,1 MΩ-cm Warning High: 3,0 MΩ-cm Warning Low: 0,5 MΩ-cm
mm/dd/yy	Consente di impostare la data nel formato mm/gg/aa. Alcuni messaggi di errore mostrano la data in cui si è verificato l'evento.		
hh:mm:ss	Consente di impostare l'ora. Alcuni messaggi di errore mostrano l'ora in cui si è verificato l'evento.		
Quick Start Done	Per terminare la procedura di avvio rapido e salvare le modifiche premere il pulsante Enter. Per chiudere la procedura di avvio rapido senza salvare, premere la freccia sinistra o il pulsante Esc. In entrambi i casi, lo schermo si spegnerà.		

Tabella 1	Intervallo guasto	Imp. predefinita max	Imp. predefinita min
Pompe T0 T1 P1 P2:	Da 3 a 105 PSI	105 PSI	3 PSI
Pompe T5:	Da 2 a 105 PSI	105 PSI	4 PSI
Pompe P3 P4 P5:	Vedere il manuale	Vedere il manuale	4 PSI

Tabella 2	Intervallo	Imp. predefinita max	Imp. predefinita min
Pompe T0 T1 P1 P2:	Da 0,0 a 10,5 GPM	0,0 GPM	0,0 GPM
Pompe T5:	Da 0,0 a 15,0 GPM	0,0 GPM	0,0 GPM
Pompe P3 P4 P5:	Da 0,0 a 30,0 GPM	0,0 GPM	0,0 GPM

Tabella 3		
Riscaldatore	Intervallo di avviso	Imp. predefinita
Nessuno	6 - 100%	6%
1 kW:	58 - 100%	58%
2,3 kW:	69 - 100%	69%
5,0 kW:	87 - 100%	87%
4,6 kW:	87 - 100%	87%
Riscaldatore	**Intervallo guasto**	**Imp. predefinita**
Nessuno	0 - 100%	0%
1 kW:	52 - 100%	52%
2,3 kW:	63 - 100%	63%
5,0 kW:	81 - 100%	81%
4,6 kW:	81 - 100%	81%

Scopo di questa guida rapida è facilitare la messa in funzione iniziale. Per tutte le altre procedure è necessario fare riferimento al manuale. Se alcuni dei passaggi qui riportati non risultano chiari, scaricare il manuale prima di proseguire.

Sicurezza:

- Il refrigeratore è progettato esclusivamente per l'uso al chiuso. Non posizionare mai il refrigeratore in un ambiente a temperature eccessivamente alte, umido, con ventilazione inadeguata o materiali corrosivi.
- Attaccare il refrigeratore a una presa correttamente collegata a massa.
- I refrigeranti utilizzati sono più pesanti dell'aria e sostituiranno l'ossigeno causando la perdita di coscienza. Il contatto con refrigeranti fuoriusciti causa ustioni della pelle. Per ulteriori informazioni, fare riferimento alla targhetta identificativa del refrigeratore e alla scheda di sicurezza dei materiali (MSDS) più recente.
- Spostare il refrigeratore con cautela. Cadute o urti improvvisi possono danneggiarne i componenti. Spegnere sempre l'apparecchiatura e scollegarla dalla tensione di alimentazione, prima di spostarla.
- Non azionare apparecchiature danneggiate o che presentano perdite.
- Se il refrigeratore è dotato di pompa volumetrica (P1 o P2), verificare che le tubazioni idrauliche e i raccordi previsti per l'applicazione siano progettati per sostenere una pressione minima di 185 psi.
- Non utilizzare una cartuccia filtro per deionizzazione (DI) con etilenglicole o propilenglicole inibito. Il filtro DI rimuove gli inibitori dalla soluzione rendendo il liquido inefficace contro la protezione dalla corrosione. Inoltre, gli inibitori aumentano la conduttività del liquido.
- Utilizzare solo i liquidi approvati riportati nella tabella 1. Prima di utilizzare liquidi o eseguire eventuali interventi di manutenzione che potrebbero implicare il contatto con il liquido, fare riferimento alle schede di sicurezza dei materiali (MSDS) del produttore per le precauzioni d'uso.
- Per impedire il congelamento dello scambiatore di calore a piastre, i refrigeratori ThermoFlex7500-10000 richiedono l'uso di 50/50 di etilenglicole/acqua o propilenglicole/acqua per temperature di processo inferiori a 10°C.

Tabella 1 - Liquidi approvati:

L'uso di qualsiasi altro liquido annullerà la garanzia del produttore.

Refrigeratori a temperature standard

- Acqua distillata/filtrata (pH 7-8)
- Acqua deionizzata (1-3 MΩ-cm, compensata)
- Acqua distillata con biocida o inibitore Nalco
- Acqua distillata con cloro (5 ppm)
- 0 – 75% etilenglicole/acqua per laboratorio
- 0 – 75% propilenglicole/acqua per laboratorio

Refrigeratori a temperature elevate

- Acqua filtrata (pH 7-8)*
- 0 – 50% etilenglicole/acqua per laboratorio
- 0 – 50% propilenglicole/acqua per laboratorio

*a 88°C per refrigeratori con pompe P1 e P2
*a 90°C per refrigeratori con altre pompe

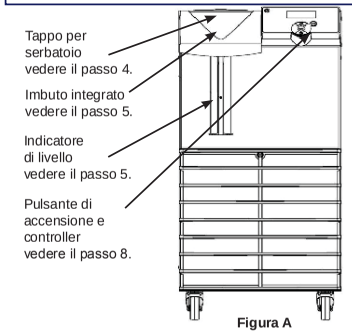

Figura A

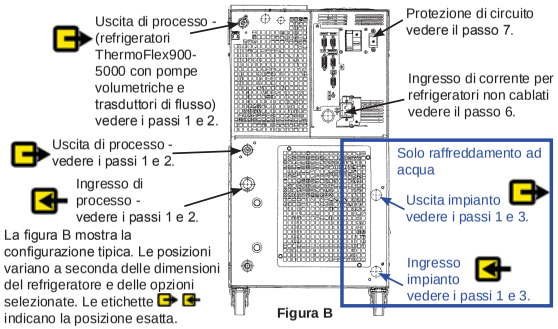

La figura B mostra la configurazione tipica. Le posizioni variano a seconda delle dimensioni del refrigeratore e delle opzioni selezionate. Le etichette indicano la posizione esatta.

Figura B

Elementi necessari per la messa in funzione:

- Una chiave regolabile
- Alimentazione e ritorno acqua dell'impianto (refrigeratori ad acqua)
- Tubazioni rigide o flessibili idonee
- Tipo di raccordi o dimensioni fascette adeguati
- Nastro adesivo Teflon® o sigillante idoneo

Raccordi acqua dell'impianto (FNPT)

ThermoFlex1400 - 5000 Ingressi/uscite in bronzo fuso da ½"

ThermoFlex7500 - 10000 Ingressi/uscite in bronzo fuso da ¾"

Raccordi per liquidi di processo (FNPT) - Uscita

TFlex900 - 10000	P1 P2 T0 T1	in bronzo fuso da 1/2"
TFlex3500 - 5000	P3 P4	in bronzo fuso da 3/4"
TFlex7500 - 10000	P3 P5 T5	in rame lavorato da 1"

Ingresso - stessa dimensione dell'uscita, in acciaio inossidabile per tutti i refrigeratori

Adattatori forniti

P1 P2 T0 T1	in polietilene da 1/2" x 3/8" e in nylon da 1/2" x 1/2"
P3 P4	MPT 3/4 x raccordo dentato in PVC 1/2
P3 P5 T5	MPT 1" x raccordo dentato in PVC 1" e MPT 1" x raccordo dentato in PVC 3/4"

1 Rimuovere tutti i tappi di spedizione (2 o 4).

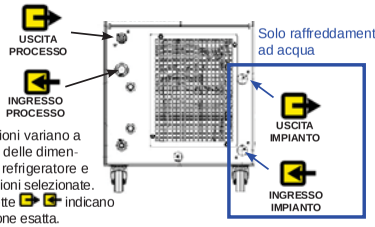

Le posizioni variano a seconda delle dimensioni del refrigeratore e delle opzioni selezionate. Le etichette indicano la posizione esatta.

Vedere la figura B.

2 Collegare l'USCITA DI PROCESSO ThermoFlex (A) all'ingresso liquidi per l'applicazione. Collegare l'INGRESSO DI PROCESSO ThermoFlex (B) all'uscita liquidi per l'applicazione.

Verificare che i raccordi siano bel saldi e sigillati. Per i refrigeratori ad aria andare al passo 4.

Non collegare le tubazioni dei liquidi di processo all'alimentazione d'acqua dell'impianto o a qualsiasi altra sorgente di liquido pressurizzato.

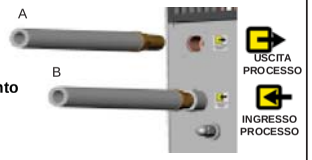

Vedere la figura B.

3 Collegare l'USCITA IMPIANTO ThermoFlex (A) a una tubazione di ritorno o scarico dell'acqua dell'impianto. Collegare l'INGRESSO IMPIANTO ThermoFlex (B) all'alimentazione acqua dell'impianto. Verificare che i raccordi siano bel saldi e sigillati.

Solo per il raffreddamento ad acqua.

La pressione di ingresso massima dell'acqua dell'impianto non deve superare i 150 PSIG. Il differenziale di pressione massimo dell'acqua dell'impianto non deve superare i 50 PSID.

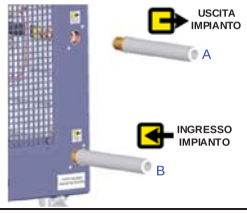

Vedere la figura B.

4 Fare riferimento alla targhetta identificativa sul retro del refrigeratore e verificare la tensione corretta. Per i refrigeratori forniti con un cavo di alimentazione, inserire l'estremità femmina del cavo nel refrigeratore e l'estremità maschio nella presa di corrente. (Il cavo di alimentazione si trova sotto il coperchio della cassa per la spedizione. Non gettare il coperchio fino a quando non si trova il cavo.)



Non azionare il refrigeratore con un cavo di alimentazione danneggiato.

Nota: i refrigeratori ThermoFlex900-5000 dotati dell'opzione di tensione variabile o globale hanno un pannello di configurazione della tensione. Fare riferimento al foglio delle istruzioni relative alla tensione spedito con il refrigeratore o vedere l'Appendice B al manuale.

Nota: per i refrigeratori che richiedono il cablaggio vedere la sezione 3 del manuale.

Vedere la figura B.

5 Se in dotazione, portare l'interruttore GFCI opzionale situato sul retro nella posizione sollevata. Per i refrigeratori compresi tra ThermoFlex900 e 10000, portare la protezione di circuito nella posizione attiva (I).

La protezione di circuito non è progettata per agire come strumento di scollegamento.



Vedere la figura B.

6 Non utilizzare mai il chiller senza il liquido di raffreddamento nel serbatoio o senza avere installato il sacchetto filtro.

Estrarre con cautela l'alloggiamento in plastica dell'imbuto per rimuoverlo e installare il sacchetto filtro in dotazione. Reinstallare nuovamente l'alloggiamento.



Vedere la figura A.

7 Riempire *lentamente* il serbatoio con liquido di processo pulito (vedere la tabella 1), utilizzando il tubo spia per controllare facilmente il livello del liquido. Quando il serbatoio è pieno, riapplicare il tappo e serrare a mano. Poiché la capacità del serbatoio potrebbe essere inferiore al necessario per l'applicazione interessata e l'aria potrebbe essere spurgata dalle tubazioni, tenere a portata di mano del liquido extra per rabboccare il sistema all'avvio del ricircolo esterno.



Nota: fare attenzione a non riempire il serbatoio al di sopra della tacca di livello MAX. Ciò determinerà la generazione di un errore di troppo pieno che causerà l'arresto del refrigeratore.

Vedere la figura A.

8 Premere .

Sul controller viene visualizzato **QUICK START**.

Nota: se il refrigeratore viene dotato di una cartuccia filtro per deionizzazione fare riferimento alla sezione 5 del manuale per informazioni sull'installazione.

Consultare il retro per ulteriori procedure.

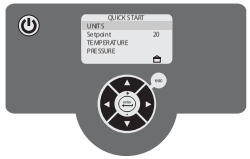

Vedere la figura A.

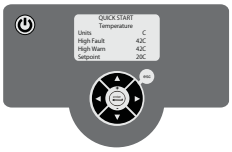

QUICK START	
UNITS	
Setpoint	**20**
TEMPERATURE	
PRESSURE	
FLUID LEVEL	
AUTO REFILL*	
FLOW*	
Line Frequency*	**60HZ**
☐ **Auto Restart**	
☐ **Audible Alarms**	
RA FAN SPEED MODE*	
Care Level	**1**
SERIAL COMM - DCOM*	
ANALOG COMM - ACOM*	
RESISTIVITY*	
mm/dd/yy	**hh:mm:ss**
◀ **Quick Start Done**	

*Se muestra solo en los enfriadores equipados con esta opción.

NOTA: Se puede modificar la configuración de cualquiera de los parámetros una vez que el enfriador comienza a funcionar.

En el controlador solo se pueden mostrar seis líneas del menú PUESTA EN MARCHA RÁPIDA al mismo tiempo.

Utilice la flecha abajo para desplazarse y resaltar las líneas. En caso de que se requiera cambiar alguno de los parámetros predeterminados, resalte la línea que desea modificar y pulse el botón Enter.

Si el texto del parámetro está escrito con letras mayúsculas, el parámetro tendrá un menú secundario. Si pulsa el botón Enter, aparecerá el menú secundario. Los menús secundarios le permiten visualizar/cambiar los valores correspondientes.

Después de pulsar el botón Enter (Intro), la línea comenzará a parpadear, lo que indicará que el valor puede cambiarse con las flechas arriba/abajo. Cuando se muestre el valor que desea, vuelva a pulsar el botón Enter para detener el parpadeo y aceptar el valor nuevo. Cuando haya realizado todos los cambios que desee, pulse la flecha izquierda o la tecla Esc para volver al menú PUESTA EN MARCHA RÁPIDA.

Si el enfriador excede el valor de error predeterminado, este se cerrará, en el controlador se mostrará un mensaje de error y, si está activada, se oirá la alarma. Si el enfriador excede el valor de alerta predeterminado, este continuará funcionando, en el controlador se mostrará un mensaje de alerta y, si está activada, se oirá la alarma.

Las líneas en las que el texto no está escrito con letras mayúsculas indican que los cambios pueden hacerse directamente en el menú PUESTA EN MARCHA RÁPIDA (por ejemplo, Valor de referencia y Frecuencia de línea). Siga el mismo procedimiento para cambiar estos valores.

Si la línea tiene una casilla en blanco (por ejemplo, Reinicio automático), resalte la línea y pulse el botón Enter para que la casilla se muestre de color negro. Una casilla negra indica que la función está activada. Vuelva a pulsar el botón Enter para volver a poner en blanco la casilla. Una casilla en blanco indica que la función está desactivada.

Texto en pantalla	Indicación	Intervalo	Valor predeterminado
UNIDADES	Escalas de visualización de temperatura, presión y flujo del controlador. (La visualización del flujo es opcional).	C o F psi, bar o kPa	C psi
		gal/min o l/min	gal/min
Valor de referencia	Valor de referencia.	De + 5 °C a + 40 °C (de + 5 °C a + 90 °C en enfriadores de alta temperatura)	+ 20 °C
TEMPERATURA	Valores de error y alerta de temperatura.	De + 2 °C a + 43 °C (+ 93 °C en enfriadores de alta temperatura)	Superior: + 42 °C (+ 92 °C en enfriadores de alta temperatura) Inferior: + 3 °C
PRESIÓN	Valores de error, alerta y tiempo de retardo de presión	Según la bomba (consulte la tabla 1)	Según la bomba (consulte la tabla 1)
	(el tiempo de retardo es el periodo de tiempo que debe transcurrir para que el enfriador se apague tras un error de presión).	Tiempo de retardo: de 0 a 30 segundos	Tiempo de retardo superior: 0 segundos (60 segundos con bombas P3 - P5) Tiempo de retardo inferior: 10 segundos
NIVEL DE LÍQUIDO	Valores de alerta y error de nivel bajo del depósito.	Según el calentador (consulte la tabla 3)	Según el calentador (consulte la tabla 3)
RECARGA AUTOMÁTICA	Valores de recarga automática opcionales. (Activado es el % de nivel de líquido que se necesita en el depósito para activar la recarga. Tiempo de espera es el tiempo máximo durante el cual funcionará la opción. Al establecer el tiempo en 0, se desactivará la opción).	Activado: del 70 % al 100 % Tiempo de espera: de 0 a 900 segundos	Según el calentador; consulte el manual
FLUJO	Valores de alerta y error del flujo del líquido del proceso.	Según la bomba (consulte la tabla 2)	Según la bomba (consulte la tabla 2)
Frecuencia de línea	Frecuencia entrante (solo enfriadores con una bomba P 3 - P 5 y la capacidad de funcionar a 50 Hz o 60 Hz. La frecuencia seleccionada ajusta automáticamente la configuración predeterminada de presión alta fija del firmware).	50 Hz o 60 Hz	60 Hz
Reinicio automático	Activa el reinicio automático.	☐ o ■	☐
Alarmas sonoras	Activa las alarmas sonoras.	☐ o ■	☐
MODO RÁPIDO DE VELOCIDAD DE VENTILADOR	Velocidad del ventilador. Solo para enfriadores refrigerados por aire ThermoFlex2500 (La opción Automático permite que el ventilador funcione con las condiciones enumeradas en el manual; consulte la sección 3. La opción Activado permite que el ventilador funcione a alta velocidad todo el tiempo).	Activado o Automático	Automático
Nivel de cuidados	Recordatorio de la frecuencia de limpieza como cuidado preventivo de los filtros de aire y líquidos del enfriador.	DESACTIVADO, 1 (1000 horas), 2 (2000 horas) 3 (3000 horas)	1
COMUNICACIONES EN SERIE - DCOM	Comunicaciones en serie opcionales (para obtener información adicional, consulte el manual).	DESACTIVADO, RS232, RS485	DESACTIVADO
COMUNICACIONES ANALÓGICAS - ACOM	Comunicaciones analógicas opcionales (para obtener información adicional, consulte el manual).	Consulte el manual.	
RESISTIVIDAD	Activa/configura la opción de resistividad (para obtener información adicional, consulte el manual).	☐ o ■ Valor de referencia: de 0,2 a 3,0 MΩ-cm Intervalo: de 0,1 a 0,5 MΩ-cm Alerta superior: de 0,0 a 3,5 MΩ-cm Alerta inferior: de 0,0 a 3,5 MΩ-cm	☐ Valor de referencia: 1,0 MΩ-cm Intervalo: 0,1 MΩ-cm Alerta superior: 3,0 MΩ-cm Alerta inferior: 0,5 MΩ-cm
mm/dd/aa	Establece la fecha. En algunos mensajes de error se muestra la fecha en la que se produjeron.		
hh:mm:ss	Establece la hora. En algunos mensajes de error se muestra la hora en la que se produjeron.		
Finalización de la puesta en marcha rápida	Para finalizar el procedimiento de puesta en marcha rápida y guardar los cambios, pulse el botón Enter. Para salir de la puesta en marcha rápida y descartar los cambios, pulse la flecha izquierda o pulse el botón Esc. En ambos casos, la pantalla se quedará en blanco.		

Tabla 1	Intervalo de error	Valor predet. superior	Valor predet. inferior
Bombas T0 T1 P1 P2:	De 3 a 105 PSI	105 PSI	3 PSI
Bombas T5:	De 2 a 105 PSI	105 PSI	4 PSI
Bombas P3 P4 P5:	Consulte el manual	Consulte el manual	4 PSI

Tabla 2	Intervalo	Valor predet. superior	Valor predet. inferior
Bombas T0 T1 P1 P2:	De 0,0 a 10,5 GPM	0,0 GPM	0,0 GPM
Bombas T5:	De 0,0 a 15,0 GPM	0,0 GPM	0,0 GPM
Bombas P3 P4 P5:	De 0,0 a 30,0 GPM	0,0 GPM	0,0 GPM

Tabla 3 Calentador	Intervalo de alerta	Valor predeterminado
Ninguno	Del 6 al 100 %	6 %
1 kW:	Del 58 al 100 %	58 %
2,3 kW:	Del 69 al 100%	69%
5,0 kW:	Del 87 al 100 %	87 %
4,6 kW:	Del 87 al 100 %	87 %
Calentador	**Intervalo de error**	**Valor predeterminado**
Ninguno	Del 0 al 100 %	0 %
1 kW:	Del 52 al 100 %	52 %
2,3 kW:	Del 63 al 100%	63%
5,0 kW:	Del 81 al 100 %	81 %
4,6 kW:	Del 81 al 100 %	81 %

Preface

Compliance

Third Party:

CSA Listed - Laboratory equipment-electrical

File # 105974_C_000

CLASS: 8721-05 CAN/CSA-C22.2 No. 61010-1-04

CLASS: 8721-85 ANSI/UL Standard 61010-1

European Union (EU) LVD & EMC

Our evaluation has demonstrated compliance with EU directives, as indicated by the CE Mark located on the chiller's nameplate and the Declaration of Conformity is located in the back of this manual.

WEEE

This product is required to comply with the European Union's Waste Electrical & Electronic Equipment (WEEE) Directive 2012/19/EU. It is marked with 'wheelie bin' symbol:



Thermo Fisher Scientific has contracted with one or more recycling/ disposal companies in each EU Member State, dispose of or recycle this product through them. Further information on Thermo Fisher Scientific's compliance with these Directives is available at **www.thermoscientific.com/WEEERoHS**

After-sale Support

Thermo Fisher Scientific is committed to customer service both during and after the sale. If you have questions concerning the chiller operation, or questions concerning spare parts or Service Contracts, call our Sales, Service and Customer Support phone number, see this manual's inside cover for contact information.

When calling, please refer to the labels on the inside cover. These labels list all the necessary information needed to properly identify your chiller.

Feedback

We appreciate any feedback you can give us on this manual. Please e-mail us at tcmanuals@thermofisher.com. Be sure to include the manual part number and the revision date listed on the front cover.

Warranty

Thermo Scientific ThermoFlex chillers have a warranty against defective parts and workmanship for 24 months (**excluding MD1/MD2 Magnetic Drive and P1/P2 Positive Displacement pumps which are warranted for 12 months**) from date of shipment. See back page for more details.

Unpacking

If the chiller has a line cord it is located under the shipping crate's lid. Do not discard the lid until the cord is located.

Locate the reservoir fluid filter bag and ensure it installed before the chiller is operated. See Section 3.

Retain all cartons and packing material until the chiller is operated and found to be in good condition. If it shows external or internal damage contact the transportation company and file a damage claim. Under ICC regulations, this is your responsibility.

Out of Box Failure
An Out of Box Failure is defined as any product that fails to operate in conformance with sellers published specifications at initial power up. Install the chiller in accordance with manufacturer's recommended operating conditions within 30 days of shipment from the seller.

Any Temperature Control product meeting the definition of an Out of Box Failure must be packed and shipped back in the original packaging to Thermo Fisher Scientific for replacement with a new chiller; seller to pay the cost of shipping. Customer must receive a Return Material Authorization (RMA) from Thermo Fisher prior to shipping.

Section 1 Safety

Safety Warnings

Make sure you read and understand all instructions and safety precautions listed in this manual before installing or operating your chiller. If you have any questions concerning the operation or the information in this manual, please contact us. See inside cover for contact information.



DANGER indicates an imminently hazardous situation which, if not avoided, *will* result in death or serious injury.



WARNING indicates a potentially hazardous situation which, if not avoided, *could* result in death or serious injury.



CAUTION indicates a potentially hazardous situation which, if not avoided, may result in minor or moderate injury. It is also be used to alert against unsafe practices.



The lightning flash with arrow symbol, within an equilateral triangle, is intended to alert the user to the presence of non-insulated "dangerous voltage" within the chiller's enclosure. The voltage magnitude is significant enough to constitute a risk of electrical shock.



This label indicates read the manual.

Observe all warning labels. ▲

Never remove warning labels. ▲

The chiller's construction provides protection against the risk of electrical shock by grounding appropriate metal parts. The protection will not function unless the power cord is connected to a properly grounded outlet. It is the user's responsibility to assure a proper ground connection is provided. ▲

The circuit protector located on the rear of the chiller is not intended to act as a disconnecting means. ▲

If the chiller's power cord is used as the disconnecting device, it must be easily accessible at all times. ▲

Never operate the chiller with damaged cords. ▲

Never place the chiller in a location or atmosphere where excessive heat, moisture, or corrosive materials are present. ▲

Many refrigerants which may be undetectable by human senses are heavier than air and will replace the oxygen in an enclosed area causing loss of consciousness. Contact with leaking refrigerant will cause skin burns. Refer to the chiller's nameplate for the type of refrigerant used and then the refrigerant's MSDS for additional information. ▲

Never connect the process fluid inlet or outlet fittings to your building water supply or any water pressure source. ▲

Never operate the chiller without fluid in the reservoir. ▲

Other than water, before using any fluid, or when performing maintenance where contact with the fluid is likely, refer to the manufacturer's MSDS and EC Safety Data sheet for handling precautions. ▲

Ensure, that no toxic gases can be generated by the fluid. Flammable gases can build up over the fluid during usage. ▲

Do not use automotive antifreeze. Commercial antifreeze contains silicates, or any Organic Acid Technologies (OATs), that can damage the pump seals. Use of automotive antifreeze will void the manufacturer's warranty. ▲

To prevent freezing/glazing of the plate exchanger, ThermoFlex7500 through ThermoFlex24000s require the use of 50/50 EG/water or 50/50 PG/water below 10°C process temperature. ▲

When using a process fluid mixture of ethylene glycol and water or propylene glycol and water, check the fluid concentration and pH on a regular basis. Changes in concentration and pH can impact system performance. See Section 3. ▲

Never operate damaged or leaking equipment. ▲

Never operate the chiller or add fluid to the reservoir with panels removed. ▲

Do not clean the chiller with solvents, only use a soft cloth and water. ▲

Drain the chiller before it is transported and/or stored in, near or below freezing temperatures. Store it in the temperature range -25°C to 60°C (with packaging), and <80% relative humidity. ▲

Always turn the chiller off and disconnect the supply voltage from its power source before moving or before performing any service or maintenance procedures. ▲

Transport the chiller with care. Sudden jolts or drops can damage the its components. ▲

Refer service and repairs to a qualified technician. ▲

Performance of installation, operation, or maintenance procedures other than those described in this manual may result in a hazardous situation and will void the manufacturer's warranty. ▲

DE

Grundlegende Sicherheitsanweisungen Umwälzkühler

Falls Sie eine dieser Anweisungen nicht verstehen, lesen Sie das Handbuch oder kontaktieren Sie uns bevor Sie fortfahren.

Sicherheit, alle Produkte:

⚠ DANGER weist auf eine unmittelbar gefährliche Situation hin, die, falls sie nicht vermieden wird, zum Tod oder schweren Verletzungen führt.

⚠ WARNING weist auf eine potenziell gefährliche Situation hin, die zu ernsthaften Verletzungen oder zum Tod führen kann, wenn sie nicht vermieden wird.

⚠ CAUTION weist auf eine potenziell gefährliche Situation hin, die, falls sie nicht vermieden wird, zu leichteren bis mittelschweren Verletzungen führen kann. Es kann auch verwendet werden, um gegen unsichere Praktiken zu warnen.

 ist dafür vorgesehen, den Benutzer vor dem Bestehen einer nicht isolierten "gefährlichen Spannung" im Gehäuse des Kühlers zu warnen. Die Höhe der Spannung ist bedeutend genug, sodass ein Stromschlag-Risiko besteht.

 weist auf das Vorhandensein heißer Oberflächen hin.

 weist darauf hin, das Handbuch zu lesen.

Benutzen Sie das Gerät keinesfalls als steriles oder an Patienten angeschlossenes Gerät. Außerdem ist das Gerät nicht für den Gebrauch an Orten mit Gefahrenklasse I, II oder III, wie in den nationalen Vorgaben für elektrische Geräte definiert, ausgelegt.

Das Gerät ist nur für den Gebrauch in Innenräumen ausgelegt. Stelle Sie es niemals an einen Ort wo übermäßige Temperaturen, Feuchtigkeit, unzureichende Belüftung oder korrosive Materialen vorhanden sind. Lesen Sie im Benutzerhandbuch über die Betriebsparameter.

Schließen Sie das Gerät an eine vorschriftsmäßig geerdete Steckdose an.

Die verwendeten Kühlmittel sind schwerer als Luft und werden im Fall einer Leckage den Sauerstoff ersetzen, was zu Bewusstlosigkeit führt. Kontakt mit auslaufendem Kühlmittel führt zu Hautverbrennungen. Den Typ des verwendeten Kühlmittels entnehmen Sie dem Namensschild des Zirkulators und zusätzliche Informationen dem neuesten US Sicherheitsdatenblatt (SDS) des Herstellers, vormals MSDS, und dem EU Sicherheitsdatenblatt.

Transportieren Sie das Gerät mit Sorgfalt. Plötzliche Stöße oder das Herabfallen können seine Komponenten beschädigen. Schalten Sie vor dem Verschieben das Gerät immer ab und trennen Sie es von der Versorgungsspannung.

Betreiben Sie niemals beschädigte oder undichte Geräte.

Verwenden Sie niemals entzündbare oder korrosive Flüssigkeiten. Benutzen Sie nur zugelassene Flüssigkeiten, die in diesem Handbuch aufgelistet sind. Entnehmen Sie vor der Verwendung einer zugelassenen Flüssigkeit oder vor Wartungsarbeiten, bei denen der Kontakt mit der Flüssigkeit wahrscheinlich ist, zusätzliche Informationen dem neuesten US Sicherheitsdatenblatt (SDS) oder dem EU Sicherheitsdatenblatt.

Schalten Sie vor dem Verschieben das Gerät immer ab und trennen Sie es von der Versorgungsspannung.

Lassen Sie die Instandhaltung und Reparaturen von einem qualifizierten Techniker durchführen.

Lagern Sie das Gerät bei Temperaturen von -25°C bis 60°C (mit Packung), und bei einer relativen Feuchtigkeit < 80%.

Die Außerbetriebnahme darf nur von einem Fachhändler unter Verwendung zertifizierter Ausrüstung durchgeführt werden. Alle einschlägigen Vorschriften müssen befolgt werden.

Die Ausführung von Installations-, Betriebs- oder Wartungsprozeduren, außer den im Handbuch beschriebenen, kann zu einer gefährlichen Situation führen und macht die Herstellergarantie ungültig.

Legen Sie niemals Netzspannung an einen der Kommunikationsanschlüsse am Kühler an.

Werden der Kühler und die Prozessflüssigkeitsleitungen nicht komplett aufgefüllt, könnte dies die Pumpe des Kühlers beschädigen. Vermeiden Sie eine Überfüllung, Flüssigkeiten dehnen sich bei Erwärmung aus.

Stellen Sie beim ThermoFlex vor dem Austausch des Behältergehäuses sicher, dass die Sichtrohr-Kugelabsperrung sicher in Stellung ist.

Betreiben Sie beim ThermoFlex900-5000 den Kühler nicht, wenn der Behälterflüssigkeitsdiffusor nicht installiert ist.

Falls Ihr Kühler mit einer Druckpumpe (P1 oder P2) ausgestattet ist, stellen Sie sicher, dass die Rohranschlussleitungen und Armaturen Ihrer Anwendung so ausgelegt sind, dass sie eine Mindestlast von 185 psi aushalten.

Kein Frostschutzmittel für Autos verwenden. Handelsübliche Frostschutzmittel enthalten Silikate, welche die Pumpendichtungen beschädigen.

Um das Enfrieren/die Verglasung des Platten-Wärmetauschers zu verhindern, müssen ThermoFlex7500-24000 Kühler mit 50/50 EG/Wasser oder 50/50 PG/Wasser bei einer Prozesstemperatur unter 10°C betrieben werden.

Prüfen Sie beim Gebrauch einer Prozessflüssigkeitsmischung aus EG/Wasser oder PG/Wasser, regelmäßig die Konzentration und den pH-Wert der Flüssigkeit. Änderungen der Konzetration un des pH-Wertes können die Leistung des Systems beeinträchtigen.Verwenden Sie keine Entionisierungsfilterpatrone (DI)

mit inhibiertem EG oder inhibiertem PG. Ein DI-Filter entfernt die Inhibitoren aus der Lösung, wodurch die Flüssigkeit wirklos gegen Korrosionsschutz wird. Inhibitoren können auch die Leitfähigkeit der Flüssigkeit erhöhen.

Sie sind schädlichen wenn man sie einatmet, schluckt oder durch die Haut absorbiert. Lesen Sie das neueste SDS des Herstellers.

Um Schäden am Platten-Wärmetauscher des Kühlers zu vermeiden, müssen Kreiselpumpen mit einer Mindestdurchflussrate 4.0 gpm (15.1 lpm) betrieben werden.Wird der Kondensatorfilter nicht gereinigt/ ersetzt, führt das zu einem Verlust der Kühlleistung und zu einem vorzeitigen Kühlsystemausfall.

Entfernen Sie zur gründlichen Reinigung die Frontgitter-Baugruppe.Bei luftgekühlten Kühler sind die Umrahmung und Rippen des Kondensators, die sich hinter der Frontgitter-Baugruppe befinden, sehr scharfkantig.

Außer im Fall der luftgekühlten Gitter-Baugruppe, darf der Kühler keinesfalls mit einer entfernten Seitenwand betrieben werden.

ThermoFlex900-5000 wassergekühlte Kühler haben einen Ventilator mit scharfen Kanten, stellen Sie deshalb sicher, dass der Kühler abgeschaltet ist, bevor Sie das Frontgitter abnehmen.

Verwendungszweck, Umwälzungskühler:

Umwälzungskühler von Thermo Scientific sind so konstruiert, dass sie einen kontinuierlichen Zulauf der Flüssigkeit bei konstanter Temperatur und Durchflussrate ermöglicht. Der Kühler besteht aus einem luft- und wassergekühlten Kühlsystem, Wärmetauscher, Umwälzpumpe, Prozessflüssigkeitsnehälter und einem Mikroprozessor-Steuergerät.

Die Kühler sind für den Dauerbetrieb und den Innengebrauch unter Einhaltung aller in diesem Handbuch angegebenen Prozeduren und Anforderungen konstruiert.

Installation, Umwälzungskühler:

Platzieren Sie den Kühler so, dass er in der Nähe seiner Trennvorrichtung ist, und leichten Zugang zu diesem hat.

Der Kühler ist für den Gebrauch an einer speziellen Steckdose vorgesehen.

Stellen Sie sicher, dass alle Rohrleitungstransportstecker vor der Installation entfernt werden.

Die Anschlüsse für Prozessflüssigkeit befinden sich auf der Rückseite des Kühlers und sind mit  (PROCESS OUTLET (PROZESSAUSLASS)) und  (PROCESS INLET (PROZESSEINLASS)) gekennzeichnet. Schließen Sie  an den Flüssigkeitseinlass Ihrer Anwendung an. Schließen Sie  an den Flüssigkeitsauslass Ihrer Anwendung an.

Schließen Sie bei wassergekühlten Kühlern den (FACILITY INLET (ANLAGENEINLASS)) an Ihre Leitungswasserversorgung. Schließen Sie den  (FACILITY OUTLET (ANLAGENAUSLASS)) an Ihren Leitungswasserrücklauf oder -Abfluss.

Bevor Sie den Kühler starten, führen Sie eine Doppelkontrolle aller Kommunikations-, elektrischen und Rohranschlüssen.

FR

Consignes de sécurité
Refroidisseurs à recirculation

Si vous ne comprenez pas l'une de ces instructions, reportez-vous au manuel ou contactez-nous avant d'effectuer une opération.

Sécurité, tous les produits :

⚠ DANGER indique une situation de danger imminent qui, si elle n'est pas évitée, peut entraîner une blessure grave ou mortelle.

⚠ WARNING indique une situation de danger potentiel qui, si elle n'est pas évitée, pourrait entraîner une blessure grave ou mortelle.

⚠ CAUTION indique une situation de danger potentiel qui, si elle n'est pas évitée, peut entraîner une blessure légère à modérée. Ce symbole est également utilisé pour mettre en garde contre des pratiques dangereuses.

 ce symbole avertit l'utilisateur de la présence d'une « tension dangereuse » non isolée dans l'enceinte du refroidisseur. La magnitude de la tension est suffisante pour constituer un risque d'électrocution.

 indique la présence de surfaces chaudes.

 indique qu'il convient de lire le manuel.

N'utilisez pas l'équipement comme appareil stérile ou relié au patient. En outre, l'équipement n'est pas prévu pour une utilisation dans des emplacements dangereux de classe I, II ou III, tels que définis par le National Electrical Code.

Il est conçu pour l'usage intérieur exclusivement. Ne placez jamais l'équipement dans un endroit présentant un excès de chaleur, d'humidité, une ventilation inadaptée ou des matériaux corrosifs. Reportez-vous au manuel pour connaître les paramètres de fonctionnement.

Branchez l'équipement sur une prise correctement mise à la terre.

Les réfrigérants utilisés sont plus lourds que l'air. En cas de fuite, ils chassent l'oxygène et provoquent une perte de connaissance. Tout contact avec la fuite de réfrigérant peut causer des brûlures cutanées. Reportez-vous à la plaque signalétique du circulateur pour connaître le type de réfrigérant utilisé. Lisez également la fiche de données de sécurité (SDS, anciennement MSDS) américaine la plus récente du fabricant ainsi que la fiche de données de sécurité européenne pour obtenir des informations complémentaires.

Déplacez l'équipement avec précaution. Les secousses ou les chutes peuvent endommager les composants. Éteignez l'équipement et débranchez la tension d'alimentation de sa source avant de le déplacer.

Ne faites jamais fonctionner un équipement endommagé ou qui fuit.

N'utilisez jamais des liquides inflammables ou corrorifs. Utilisez uniquement les liquides approuvés cités dans le manuel. Avant d'utiliser un liquide ou de procéder à une opération de maintenance pouvant comporter un contact avec le liquide, reportez-vous aux fiches de données de sécurité du fabricant et de l'Union européenne pour obtenir des informations complémentaires.

Éteignez l'équipement et débranchez-le de sa tension d'alimentation avant de le déplacer.

Confiez les entretiens et réparations à un technicien qualifié.

Stockez l'équipement à une température comprise entre 25°C et 60°C (avec l'emballage), et sous une humidité relative <80%.

La mise hors service doit être effectuée par un revendeur qualifié à l'aide d'un équipement certifié. Toutes les réglementations en vigueur doivent être respectées.

L'exécution des procédures d'installation, de fonctionnement ou de maintenance autres que celles décrites dans le manuel peuvent créer une situation dangereuse et annuler la garantie du fabricant.

Ne mettez jamais les raccordements de communications du refroidisseur sous tension.

Si vous ne remplissez pas complètement le refroidisseur et les conduites de liquide, vous risquez d'endommager la pompe. Évitez de trop remplir le réservoir car les liquides se dilatent lorsqu'ils sont chauffés.

Sur le ThermoFlex, avant de remplacer le boîtier du réservoir, vérifiez que le bouchon à bille du tube de regard du réservoir est correctement mis en place.

Sur ThermoFlex900-5000, ne faites pas fonctionner le refroidisseur si le diffuseur de liquide du réservoir est installé.

Si votre refroidisseur est équipé d'une pompe volumétrique (P1 ou P2), vérifiez que les conduites et les raccords de votre application peuvent résister à 185 psi.

N'utilisez pas d'antigel automobile. Les antigels commerciaux contiennent des silicates qui endommagent les joints de la pompe.

Pour éviter la congélation/le givrage de l'échangeur à plaques, les refroidisseurs ThermoFlex7500-24000 nécessitent l'utilisation d'un mélange à part égale d'éthylène glycol et d'eau ou de propylène glycol et d'eau à une température de fonctionnement inférieure à 10°C.
Si vous utilisez un mélange d'éthylène glycol et d'eau ou de propylène glycol et d'eau, vérifiez régulièrement sa concentration et son pH. Les changements de concentration et de pH peuvent avoir une influence sur les performances du système.

N'utilisez pas de cartouche à filtre de désionisation (DI) avec de l'éthylène glycol inhibé ou du propylène glycol inhibé. Un filtre DI éliminera les inhibiteurs de la solution et rendra le liquide inefficace contre la protection anti-corrosion. De même, les inhibiteurs augmentent la conductivité du liquide.
Les biocides sont corrosifs et peuvent causer des lésions oculaires irréversibles ainsi que des brûlures cutanées. Ils sont nocifs s'ils sont inhalés, avalés ou absorbés par la peau.
Reportez-vous à la fiche de données de sécurité la plus récente du fabricant.
Pour éviter d'endommager l'échangeur à plaques du refroidisseur, les pompes centrifugeuses nécessitent un débit minimum de 15,1 l/min.
Le non-nettoyage ou non-remplacement du filtre du condenseur peut causer une perte de capacité de refroidissement et entraîner une panne prématurée du système de refroidissement. Pour un nettoyage complet, déposez la grille avant.
Sur les refroidisseurs à air, le boîtier du condenseur et les ailettes situés derrière la grille avant sont très tranchants.
Hormis la grille refroidie à l'air, ne faites jamais fonctionner le refroidisseur si l'un des panneaux est déposé.

Les refroidisseurs à eau ThermoFlex900-5000 sont dotés d'un ventilateur dont les hélices sont tranchantes. Vérifiez que le refroidisseur est éteint avant de déposer la grille avant.

Utilisation prévue des refroidisseurs à recirculation

Les refroidisseurs à recirculation de Thermo Scientific sont conçus pour fournir du liquide en continu à une température et selon un débit constants. Le refroidisseur se compose d'un système de réfrigération à air ou à eau, d'un échangeur de chaleur, d'une pompe de recirculation, d'un réservoir de liquide et d'un contrôleur à microprocesseur.

Les refroidisseurs sont conçus pour fonctionner en continu à l'intérieur, conformément à toutes les procédures et exigences indiquées dans son manuel.

Installation des refroidisseurs à recirculation

Placez le refroidisseur de manière à ce qu'il soit à proximité et d'accès facile à son dispositif de sectionnement.

Le refroidisseur doit être branché sur une prise dédiée.

Vérifiez que tous les bouchons d'expédition de la tuyauterie sont retirés avant l'installation.

Les raccordements du liquide de traitement se situent à l'arrière du refroidisseur et portent les étiquettes  (PROCESS OUTLET, SORTIE LIQUIDE) et  (PROCESS INLET, ENTRÉE LIQUIDE). Reliez  sur l'entrée du liquide de votre application. Reliez  sur la sortie du liquide de votre application.

Pour les refroidisseurs à eau, reliez  (FACILITY INLET, ENTRÉE INSTALLATION) sur l'alimentation en eau de votre établissement. Reliez  (FACILITY OUTLET, SORTIE INSTALLATION) sur l'évacuation ou le retour d'eau de votre établissement.

Avant de démarrer le refroidisseur, vérifiez deux fois tous les raccordements électrique, de plomberie et de communication.

ES

Instrucciones básicas de seguridad
Refrigeradores de recirculación

Si no se entiende alguna de estas instrucciones, consulte el manual o póngase en contacto con nosotros antes de proceder.

Seguridad, todos los productos:

⚠ DANGER indica una situación de peligro inmediato que, si no se evita, provocará la muerte o lesiones graves.

⚠ WARNING indica una situación potencialmente peligrosa que, si no se evita, podría tener como resultado lesiones graves o la muerte.

⚠ CAUTION indica una situación potencialmente peligrosa que, si no se evita, puede ocasionar lesiones leves o moderadas. También se utiliza para alertar de prácticas inseguras.

 está indicado para alertar al usuario de la presencia de "tensión peligrosa" sin aislar dentro del alojamiento del refrigerador. La magnitud de la tensión es lo suficientemente importante para constituir un riesgo de electrocución.

 indica la presencia de superficies calientes.

 indica que se debe leer el manual.

No utilice el equipo como dispositivo conectado al paciente o dispositivo estéril. Además, el equipo no está diseñado para ser utilizado en lugares peligrosos de Clase I, II o III de acuerdo con el Código Eléctrico Nacional.

Este equipo está diseñado para ser utilizado en interiores solamente. No lo coloque nunca en un lugar donde haya calor excesivo, humedad, ventilación inadecuada o materiales corrosivos. Consulte el manual para conocer los parámetros de funcionamiento.

Conecte el equipo a una toma correctamente conectada a tierra.

Los refrigerante utilizados son más pesados que el aire y, si hay una fuga, sustituirán al oxígeno, lo que provocará la pérdida de consciencia. El contacto con el refrigerante expulsado provocará quemaduras en la piel. Consulte la placa de datos del circulador para conocer el tipo de refrigerante utilizado y, a continuación, la hoja de datos de seguridad (SDS) más reciente del fabricante para EE.UU., anteriormente conocida como MSDS, así como la hoja de datos de seguridad para la UE a fin de obtener información adicional.

Mueva el equipo con cuidado. Las caídas o los impactos repentinos pueden dañar los componentes. Apague siempre el equipo y desconéctelo de la tensión de suministro antes de moverlo.

Nunca utilice un equipo dañado o con fugas.

Nunca utilice fluidos inflamables o corrosivos. Utilice solo los fluidos aprobados que se incluyen en el manual. Antes de utilizar un fluido o realizar tareas de mantenimiento donde es probable que se entre en contacto con el fluido en cuestión, consulte la hoja de datos de seguridad (SDS) más reciente del fabricante para EE.UU., así como la hoja de datos de seguridad para la UE a fin de obtener información adicional.

Apague siempre el equipo y desconéctelo de la tensión de suministro antes de moverlo.

Delegue las tareas de servicio y las reparaciones en un técnico cualificado.

Guarde el equipo a una temperatura comprendida entre -25 °C y 60 °C (con embalaje), y una humedad relativa de <80%.

El desmantelamiento solo debe ser realizado por un proveedor cualificado que utilice el equipo homologado. Debe cumplirse toda la normativa vigente.

La realización de los procedimientos de instalación, funcionamiento o mantenimiento distintos de los que se describen en el manual puede dar lugar a situaciones peligrosas y anularán la garantía del fabricante.

Nunca aplique tensión de línea a ninguna de las conexiones de comunicación del refrigerador.

Si no se llenan por completo las líneas de fluidos del refrigerador y procesos, podría dañarse la bomba del refrigerador. Evite llenar en exceso; los fluidos se expanden al calentarse.

En el caso de ThermoFlex, antes de sustituir el alojamiento del depósito, asegúrese de que el tope de bola del tubo de control del depósito está en su lugar de forma segura.

En el caso de ThermoFlex900-5000, no utilice el refrigerador a menos que se haya instalado el difusor de fluido del depósito.

Si su refrigerador dispone de una bomba de desplazamiento positivo (P1 o P2), asegúrese de que las líneas de bombeo de la aplicación y los accesorios son capaces de soportar al menos 185 psi.

No utilice anticongelante de automoción. Los anticongelantes comerciales contienen silicatos que dañan las juntas de las bombas.

Para evitar la congelación/el vidriado del intercambiador de la placa, los refrigeradores ThermoFlex7500-24000 precisan el uso de EG/agua al 50/50 o PG/agua al 50/50 con una temperatura de proceso inferior a 10 ºC.

Al utilizar una mezcla de fluido para procesos de EG/agua o PG/agua, revise la concentración y el pH del fluido periódicamente. Los cambios en la concentración y el pH pueden alterar el rendimiento del sistema.

No utilice un cartucho de filtro de desionización (DI) con EG o PG inhibido. Un filtro DI eliminará los inhibidores de la solución y hará que el fluido sea ineficaz contra la protección anticorrosión. Además, los inhibidores aumentan la conductividad de los fluidos.

Son dañinos si se inhalan, se tragan o se absorben a través de la piel. Consulte la hoja SDS más reciente del fabricante.

Para evitar daños en el intercambiador de la placa del refrigerador, las bombas centrífugas exigen una tasa de caudal mínimo de 4,0 gpm (15,1 lpm).

Si no se limpia/sustituye el filtro del condensador, se producirá una pérdida de capacidad de enfriamiento y esto supondrá un fallo prematuro del sistema de enfriamiento. Para llevar a cabo una limpieza minuciosa, retire el conjunto de la rejilla delantera.

En los refrigeradores enfriados por aire, el bastidor del condensador y las aletas situadas detrás del conjunto de la rejilla delantera son muy afilados.

Nunca utilice el refrigerador con los paneles retirados, salvo el conjunto de la rejilla enfriada por aire.

Los refrigeradores ThermoFlex900-5000 enfriados por agua tienen un ventilador con aspas afiladas. Asegúrese de que el refrigerador está apagado antes de retirar la rejilla delantera.

Uso previsto, Refrigeradores de recirculación:

Los refrigeradores de recirculación de Thermo Scientific están diseñados para ofrecer un suministro continuo de fluido a una temperatura y una tasa de caudal constantes. Los refrigeradores constan de un sistema de refrigeración enfriado por aire o por agua, un intercambiador de calor, una bomba de recirculación, un depósito de fluido para procesos y un controlador de microprocesador.

Los refrigeradores están diseñados para llevar a cabo un funcionamiento continuo y para utilizarse en interiores de acuerdo con todos los procedimientos y requisitos que se detallan en su manual.

Instalación, Refrigeradores de recirculación:

Ubique el refrigerador cerca de su dispositivo de desconexión y de forma que resulte fácil acceder a él.

El refrigerador está diseñado para ser utilizado en una toma especial.

Asegúrese de retirar todos los tapones de envío de la línea de tuberías antes de la instalación.

Las conexiones de fluido para procesos se encuentran en la parte posterior del refrigerador y están marcadas con el texto  (PROCESS OUTLET, SALIDA PARA PROCESOS) y  (PROCESS INLET, ENTRADA PARA PROCESOS). Conecte a la entrada de fluido de su aplicación. Conecte  a la salida de fluido de su aplicación.

En el caso de los refrigeradores enfriados por agua, conecte  (FACILITY INLET, ENTRADA DE LA INSTALACIÓN) al suministro de agua de la instalación. Conecte  (FACILITY OUTLET, SALIDA DE LA INSTALACIÓN) al retorno o al drenaje de agua de la instalación.

Antes de poner en marcha el refrigerador, vuelva a comprobar todas las conexiones de comunicación, eléctricas y de tuberías aplicables.

PT

Instruções de Segurança Essenciais
Refrigeradores de Recirculação

No caso de não compreender qualquer uma destas instruções, consulte o manual ou contacte-nos antes de prosseguir.

Segurança, todos os produtos:

⚠ DANGER Indica uma situação de perigo iminente que, se não for evitada, vai resultar em morte ou lesões graves.

⚠ WARNING Indica uma situação de potencial perigo, que se não for evitada, pode resultar em morte ou lesões graves.

⚠ CAUTION Indica uma situação de potencial perigo, que se não for evitada, pode resultar em ferimentos leves ou moderados. Também é utilizado para alertar contra práticas não seguras.

 Destina-se a alertar o utilizador para a presença de "voltagem perigosa" sem isolamento na caixa do refrigerador. A magnitude da voltagem é suficientemente significante para constituir um risco de choque eléctrico.

 Indica a presença de superfícies quentes.

 Indica a leitura do manual.

Não utilize o equipamento como um dispositivo estéril ou ligado ao paciente. Em complemento, o equipamento não se destina a ser utilizado em Locais Perigosos de Classe I, II ou III conforme definido pelo Código Eléctrico Nacional.

O equipamento destina-se apenas a utilização interior. Nunca o coloque num local onde exista calor em excesso, humidade, ventilação não adequada, ou materiais corrosivos. Consulte o manual relativamente a parâmetros operacionais.

Ligue o equipamento a uma tomada de alimentação com ligação à terra.

Os refrigerantes utilizados são mais pesados do que o ar e, em caso de fuga, vão substituir o oxigénio causando perda de consciência. O contacto com o refrigerante em vazamento vai causar queimaduras na pele. Consulte a placa de identificação do circulador relativamente ao tipo de refrigerante utilizado e depois a Ficha de Segurança (SDS) dos EUA mais recente, anteriormente designada como MSDS, e a Ficha de Segurança da UE para informação adicional.

Movimente o equipamento com cuidado. Solavancos ou quedas súbitas podem danificar os seus componentes. Desactive sempre o equipamento e desligue-o da sua tensão de alimentação antes de o deslocar.

Nunca coloque em funcionamento equipamento danificado ou em vazamento.

Nunca utilize fluidos inflamáveis ou corrosivos. Utilize apenas os fluidos aprovados listados no manual. Antes de utilizar qualquer fluido ou efectuar manutenção onde for provável o contacto com o fluido, consulte a Ficha de Segurança (SDS) dos EUA mais actualizada e a Ficha de Segurança da UE para informação adicional.

Desactive sempre o equipamento e desligue-o da sua fonte de alimentação antes de o deslocar.

As revisões e reparações devem ser efectuadas por um técnico qualificado.

Armazene o equipamento a um intervalo de temperatura entre -25°C a 60°C (com embalagem), e <80% de humidade relativa.

O desmantelamento deve ser apenas efectuado por um representante qualificado utilizando equipamento certificado. Todos os regulamentos predominantes têm de ser seguidos.

Realizar procedimentos de instalação, operação ou manutenção para além dos descritos no manual pode resultar numa situação perigosa e pode invalidar a garantia do fabricante.

Nunca aplique tensão de linha a qualquer uma das ligações de comunicação no refrigerador.

O não enchimento completo do refrigerador e as linhas de fluido de processamento podem danificar a bomba do refrigerador. Evite o enchimento excessivo, já que os fluidos expandem quando aquecidos.

No ThermoFlex, antes de substituir a caixa do reservatório certifique-se de que a tampa de visualização do reservatório está devidamente colocada.

No ThermoFlex900-5000, não opere o refrigerador a menos que o difusor de fluido do reservatório esteja instalado.

Se o seu refrigerador estiver equipado com uma bomba de deslocamento positivo (P1 ou P2), certifique-se de que os seus encaixes e linhas de canalização estão qualificados para suportarem um mínimo de 185 psi.

Não utilize anticongelante automóvel. O anticongelante comercial contém silicatos que danificam os vedantes da bomba.

Para evitar o congelamento/vitrificação do permutador de placa, os refrigeradores ThermoFlex7500-24000 requerem a utilização de EG/água 50/50 ou PG/água 50/50 abaixo da temperatura de processamento 10°C.

Quando utilizar uma mistura de fluido de processamento de EG/água ou PG/água, verifique a concentração do fluido e o pH regularmente. Alterações na concentração e no pH podem ter impacto no desempenho do sistema.

Não utilize um cartucho de filtro de Desionização (DI) com EG Inibido ou PG Inibido. Um filtro de DI vai remover os inibidores da solução que estão a tornar o fluido ineficaz contra a protecção de corrosão. Para além disso, os inibidores aumentam a condutividade do fluido.

Os biocidas são corrosivos e podem causar lesões oculares irreversíveis e queimaduras na pele. São prejudiciais se inalados, engolidos ou absorvidos através da pele. Consulte a Ficha de Segurança do fabricante mais actualizada.

Para evitar danos no permutador de placa do refrigerador, as bombas centrífugas requerem um caudal mínimo de 4.0 gpm (15.1 lpm).

A não limpeza/substituição do filtro do condensador causa a perda da capacidade de arrefecimento e conduz a uma falha prematura do sistema de arrefecimento. Para uma limpeza mais completa, remova o conjunto da grelha frontal.

Nos refrigeradores refrigerados a ar, a moldura e rebordos do condensador localizados por detrás do conjunto da grelha frontal são muito aguçados.

Para além do conjunto de grelha refrigerada a ar, nunca opere o refrigerador com qualquer painel removido.

Os refrigeradores de refrigeração a água ThermoFlex900-5000 possuem um ventilador com lâminas aguçadas, pelo que se deve assegurar que o refrigerador está desligado antes de remover a grelha frontal.

Utilização Prevista, Refrigeradores de Recirculação:

Os refrigeradores de recirculação Thermo Scientific são concebidos para facultar um fornecimento contínuo de fluido a um fluxo e temperatura constantes. O refrigerador conste num sistema de refrigeração com arrefecimento a ar ou água, permutador de calor, bomba de recirculação, reservatório de fluido de processamento e um controlador de microprocessador.

Os refrigeradores destinam-se a funcionamento contínuo e para utilização interna de acordo com todos os procedimentos e requisitos descritos deste manual.

Instalação, Refrigeradores de Recirculação:

Coloque o refrigerador de forma a que esteja próximo e tenha fácil acesso ao dispositivo de desconexão.

O refrigerador destina-se a utilização numa tomada dedicada.

Certifique-se de que todas as fichas de expedição da linha de canalização são removidas antes da instalação.

As ligações de fluido de processamento encontram-se localizadas na parte posterior do refrigerador e encontram-se etiquetadas  ((PROCESS OUTLET) (SAÍDA DE PROCESSAMENTO)) e  ((PROCESS INLET) (ENTRADA DE PROCESSAMENTO)). Ligue a  à entrada de fluido na sua aplicação. Ligue a  à saída de fluido na sua aplicação. Para refrigeradores com refrigeração a água ligue a  ((FACILITY INLET) (ENTRADA DE UNIDADE)) ao abastecimento de água da unidade. Ligue a  ((FACILITY OUTLET) (SAÍDA DE UNIDADE)) ao retorno ou drenagem de água da unidade.

Antes de iniciar o refrigerador, verifique todas as ligações de comunicação, eléctricas e tubagens aplicáveis.

NL

Essentiële veiligheidsinstructies Recirculatiekoelers

Als één van de instructies niet duidelijk is, raadpleeg dan de handleiding of neem contact op met ons vooraleer door te gaan.

Veiligheid, alle producten:

⚠ DANGER duid op een onmiddellijke gevaarlijke situatie die, indien ze niet wordt vermeden, zal leiden tot de dood of ernstige letsels.

⚠ WARNING duid op een gevaarlijke situatie die, indien ze niet wordt vermeden, kan leiden tot de dood of ernstige letsels.

⚠ CAUTION duidt op een mogelijke gevaarlijke situatie die, indien ze niet wordt vermeden, zal leiden tot lichte of middelmatige letsels. Het kan ook gebruikt worden als waarschuwing tegen onveilige praktijken.

 bedoeld om de gebruiker te waarschuwen voor de aanwezigheid van een niet-geïsoleerde “gevaarlijke spanning” binnenin de behuizing van de koeler. De grootte van de spanning is voldoende significant om een gevaar te vormen op een elektrisch schok.

 duidt op de aanwezigheid van hete oppervlakken.

 duidt op het raadplegen van de handleiding.

Gebruik de apparatuur niet als steriel of als een met de patiënt verbonden apparaat. Daarnaast is de apparatuur niet ontworpen voor gebruik in gevaarlijke locaties van klasse I, II of III zoals gedefinieerd door de National Electrical Code.

De apparatuur is uitsluitend bedoeld voor gebruik binnenshuis. Plaats deze nooit op een locatie met overmatige hitte, vochtigheid, onvoldoende ventilatie of waar er corrosieve materialen aanwezig zijn. Raadpleeg de handleiding voor de operationele parameters.

Sluit de apparatuur steeds aan op een goed geaard stopcontact.

Koelmiddelen zijn zwaarder dan lucht en als er een lek is, zal het de zuurstof vervangen en kan dit leiden tot bewusteloosheid. Contact met het lekkende koelmiddel kan leiden tot brandwonden op de huid. Raadpleeg het typeplaatje van de circulatiepomp voor het type koelmiddel dat wordt gebruikt en raadpleeg vervolgens het meest recente veiligheidsgegevensblad (Safety Data Sheet - SDS) van de producent, eerder gekend als MSDS, en het Europese veiligheidsgegevensblad voor extra informatie.

Verplaats de apparatuur steeds erg zorgvuldig. Plotse schokken of druppels kunnen de componenten beschadigen. Schakel de apparatuur steeds uit en haal de stekker uit het stopcontact vooraleer deze te verplaatsen.

Gebruik nooit beschadigde of lekkende apparatuur.

Gebruik nooit ontvlambare of corrosieve vloeistoffen. Maak alleen gebruik van de goedgekeurde vloeistoffen in de handleiding. Raadpleeg, vooraleer een vloeistof te gebruiken of onderhoud uit te voeren waarbij het waarschijnlijk is dat u in aanraking komt met de vloeistof, het meest recente veiligheidsgegevensblad (Safety Data Sheet - SDS) van de producent en het Europese veiligheidsgegevensblad voor extra informatie.

Schakel de apparatuur steeds uit en haal de stekker uit het stopcontact vooraleer deze te verplaatsen.

Laat het onderhoud en de herstellingen steeds uitvoeren door een gekwalificeerd technicus.

Sla de apparatuur op bij een temperatuur tussen -25°C tot 60°C (met verpakking) en een relatieve vochtigheid van minder dan 80%.

Het buiten dienst stellen mag alleen uitgevoerd worden door een gekwalificeerde dealer die gebruik maakt van gecertificeerde uitrusting. Alle geldende regelgevingen moeten worden gevolgd.

Het uitvoeren van de installatie-, de werkings- of onderhoudsprocedures op een andere manier dan beschreven in de handleiding kan leiden tot een gevaarlijke situatie en zal de garantie van de producent ongeldig maken.

Sluit nooit de netspanning aan op de communicatie-aansluitingen van de koeler.

Het volledig vullen van de koeler en de leidingen met procesvloeistof kan de koelpomp beschadigen. Vermijd het overvullen omdat vloeistoffen uitzetten wanneer ze worden opgewarmd.

Verzeker bij ThermoFlex voor het vervangen van de behuizing van het reservoir dat de balstopper van de kijkbuis van het reservoir stevig is bevestigd.

Stel de koeler van een ThermoFlex900-5000 niet in werking tenzij het reservoir van de vloeistofdiffuser is geïnstalleerd.

Als uw koeler is uitgerust met een positieve verplaatsingspomp (P1 of P2), verzeker dan dat uw leidingen en fittingen bestand zijn tegen minimaal 185 psi.

Gebruik geen antivriesmiddel voor auto's. Commercieel antivriesmiddel bevat silicaten die de pompdichtingen kunnen beschadigen.

Om het bevriezen van en het ontstaan van een ijslaagje op de plaatvormige warmtewisselaar te voorkomen, vereisen de ThermoFlex7500-24000-koelers het gebruik van 50/50 EG/water of 50/50 PG/water bij een temperatuur onder 10°C.

Bij gebruik van een mix van procesvloeistoffen van EG/water of PG/water dient u de vloeistofconcentratie en pH op een regelmatige basis te controleren. Wijzigingen in de concentratie en de pH kunnen een impact hebben op de prestaties van het systeem.

Gebruik geen deïonisatie(DI)-filtercartridge met Inhibited EG of Inhibited PG. Een DI-filter zal remmers uit de vloeistof verwijderen waardoor de vloeistof niet meer effectief is als bescherming tegen corrosie. Daarnaast verhogen remmers de geleiding van vloeistoffen.

Biociden zijn corrosief en kunnen onherstelbare schade toebrengen aan de ogen en ook brandwonden veroorzaken. Ze zijn schadelijk als ze worden geïnhaleerd, worden ingeslikt of worden opgenomen via de huid. Raadpleeg het meest recente veiligheidsgegevensblad (SDS) van de producent.

Om schade te voorkomen aan de plaatvormige warmtewisselaar, vereisen de centrifugale pompen een minimale doorstroming van 15,1 liter per minuut.

Het nalaten om de filter van de condensor te reinigen of te vervangen kan leiden tot een verlies van koelcapaciteit en tot het voortijdig defect raken van het koelsysteem. Verwijder de rooster aan de voorzijde voor een grondige reiniging.

Bij luchtgekoelde koelers bevinden het kader en de vinnen van de condensor zich achter de voorste rooster en dient u goed op te letten want ze zijn erg scherp.

Bij andere koelers dan degene met een luchtgekoeld rooster mag u de koeler nooit activeren wanneer het paneel verwijderd is.

ThermoFlex900-5000 watergekoelde koelers beschikken over een ventilator met scherpe schoepen, zorg ook dat de koeler is uitgeschakeld vooraleer de rooster vooraan wordt verwijderd.

Bedoeld gebruik, recirculatiekoelers:

De recirculatiekoelers van Thermo Scientific zijn ontworpen om een continue toevoer van vloeistoffen te voorzien met een constante temperatuur en doorstroming. De koeler bestaat uit een luchtgekoeld of watergekoeld koelsysteem, warmtewisselaar, recirculatiepomp, reservoir voor procesvloeistof en een microprocessorcontroller.

Koelers zijn ontworpen voor een continue werking en voor gebruik binnenshuis in overeenkomst met alle procedures en vereisten die staan vermeld in de handleiding.

Installatie, recirculatiekoelers:

Plaats de koeler zodat deze zich dichtbij het loskoppelapparaat bevindt en dat deze eenvoudig toegankelijk is.

De koeler is bedoeld voor gebruik op een daartoe bestemde uitvoer.

Verzeker dat alle transportpluggen op de leidingen zijn verwijderd voor de installatie.

De aansluitingen van de procesvloeistof bevinden zich op de achterzijde van de koeler en hebben een label  (PROCESS OUTLET (PROCESUITVOER)) en  (PROCESS INLET (PROCESTOEVOER)). Sluit de  aan op de vloeistoftoevoer van uw applicatie. Sluit de  aan op de vloeistofuitvoer van uw applicatie.

Sluit voor watergekoelde koelers de  (FACILITY INLET (TOEVOER VAN DE FACILITEIT)) aan op watertoevoer van uw faciliteit. Sluit de  (FACILITY OUTLET (UITVOER VAN DE FACILITEIT)) aan op de waterretour of -afvoer van de faciliteit.

Vooraleer de koeler te starten dient u alle van toepassing zijnde communicatie-aansluitingen, elektrische aansluitingen en leidingaansluitingen tweemaal te controleren.

IT

Istruzioni essenziali per la sicurezza
Chiller a ricircolazione

Se queste istruzioni non sono chiare, fare riferimento al manuale oppure contattare il nostro ufficio prima di procedere.

Sicurezza, tutti i prodotti:

⚠ DANGER indica una situazione di pericolo imminente che, se non evitata, potrebbe causare morte o ferite gravi.

⚠ WARNING indica una situazione potenzialmente pericolosa che se non evitata potrebbe causare lesioni gravi o morte.

⚠ CAUTION indica una situazione di pericolo potenziale che, se non evitata, potrebbe causare ferite lievi o non gravi. Viene anche utilizzato come avviso contro pratiche non sicure.

 destinato ad avvisare l'utente della presenza di "tensioni pericolose" non isolate all'interno dell'involucro del chiller. Il valore della tensione è abbastanza significativo da costituire un rischio di scosse elettriche.

 indica la presenza di superfici calde.

 segnala di leggere il manuale.

Non utilizzare l'apparecchiatura come dispositivo sterile o collegato a un paziente. Inoltre, l'apparecchiatura non è progettata per l'utilizzo in luoghi pericolosi di Classe I, II o III secondo le definizioni del National Electrical Code.

Questa apparecchiatura è destinata all'uso in ambienti chiusi. Non collocarla mai in luoghi soggetti a calore eccessivo, umidità, ventilazione inadeguata o materiali corrosivi. Fare riferimento al manuale per i parametri operativi.

Collegare l'apparecchiatura ad una presa di rete adeguatamente messa a terra.

I refrigeranti utilizzati sono più pesanti dell'aria e, in caso di perdite, possono sostituire l'ossigeno causando perdita di conoscenza.. Il contatto della pelle con il refrigerante fuoriuscito causa ustioni. Per ulteriori informazioni, fare riferimento alla targhetta del circuito circolatore per il tipo di refrigerante utilizzato e ai dati tecnici di sicurezza aggiornati del produttore (US Safety Data Sheet - SDS), precedentemente noti come MSDS, non ché ai dati tecnici di sicurezza UE.

Spostare l'apparecchiatura con cautela. Sobbalzi o cadute improvvise possono danneggiare i suoi componenti. Spegnere sempre l'apparecchiatura e scollegarla dalla tensione di alimentazione prima di spostarla.

Non utilizzare mai apparecchiature danneggiate o con perdite.

Non utilizzare mai fluidi infiammabili o corrosivi. Utilizzare esclusivamente i fluidi certificati elencati nel manuale. Prima di utilizzare fluidi o eseguire operazioni di manutenzione che prevedano il contatto con il fluido, fare riferimento ai dati tecnici di sicurezza aggiornati del produttore (US Safety Data Sheet - SDS) e ai dati tecnici di sicurezza UE per ulteriori informazioni.

Spegnere sempre l'apparecchiatura e scollegarla dalla tensione di alimentazione prima di spostarla.

Demandare assistenza e riparazioni ad un tecnico qualificato.

Conservare l'apparecchiatura ad una temperatura compresa tra -25°C e 60°C (con imballo), e una umidità relativa <80%.

La disattivazione deve essere eseguita solo da rivenditori qualificati utilizzando attrezzature certificate. Dovranno essere rispettate tutte le norme vigenti.

L'esecuzione di procedure di installazione, funzionamento o manutenzione diverse da quelle descritte nel manuale potrebbero determinare situazioni di pericolo e causare l'annullamento della garanzia del produttore.

Non applicare mai la tensione di linea alle connessioni di comunicazione presenti sul chiller.

Il riempimento incompleto delle linee di trasmissione di fluido per il processo e il chiller può danneggiare la pompa dell'apparecchio. Evitare comunque di riempire in eccesso, in quanto i fluidi si espandono se riscaldati.

Su ThermoFlex, prima di sostituire l'involucro del serbatoio, assicurarsi che il fermo sferico del tubo di verifica serbatoio sia posizionato in sicurezza.

Su ThermoFlex900-5000, non azionare il chiller se non è installato il diffusore di fluido del serbatoio.

Se il chiller è provvisto di una pompa volumetrica positiva (P1 o P2), assicurarsi che le tubazioni dell'applicazione e i relativi raccordi possano resistere ad una pressione di almeno 185 psi.

Non utilizzare antigelo per autotrazione. L'antigelo commerciale contiene silicati che danneggiano le guarnizioni della pompa.

Per evitare il congelamento dello scambiatore a piastra, i chiller ThermoFlex7500-24000 richiedono l'utilizzo di 50/50 EG/acqua o 50/50 PG/acqua sotto la temperatura di processo di 10°C.

Quando si utilizza una miscela di fluido di EG/acqua o PG/acqua, verificare periodicamente la concentrazione del fluido e il pH. Eventuali variazioni di concentrazione e pH possono compromettere le prestazioni del sistema.

Non utilizzare un cartuccia filtro di deionizzazione (DI) con EG o PG inibiti. Un filtro DI rimuoverà gli inibitori dalla soluzione, rendendo il fluido inefficace contro la corrosione. Inoltre, gli inibitori fanno aumentare la conduttività del fluido.

I biocidi sono corrosivi e possono causare danni irreversibili agli occhi e ustioni cutanee. Sono pericolosi se inalati, ingeriti o assorbiti attraverso la pelle. Fare riferimento ai documenti SDS più aggiornati del produttore.

Per evitare danni allo scambiatore a piastra del chiller, le pompe centrifughe richiedono una portata minima di 4,0 gpm (15,1 lpm).

La mancata pulizia/sostituzione del filtro del condensatore provoca una perdita della capacità di raffreddamento con il rischio di guasti prematuri del sistema di raffreddamento. Per una pulizia approfondita, togliere il gruppo della griglia anteriore.

Nei chiller raffreddati ad aria le alette ed il telaio del condensatore dietro il gruppo della griglia anteriore sono molto affilati.

Non azionare mai il chiller con pannelli rimossi, ad eccezione del gruppo griglia raffreddato ad aria.I chiller raffreddati ad acqua ThermoFlex900-5000 dispongono di una ventola con pale affilate; assicurarsi che il chiller sia spento prima di rimuovere la griglia anteriore.

Destinazione d'uso, chiller a ricircolazione:

I chiller a ricircolazione Thermo Scientific sono progettati per fornire un'alimentazione continua di fluido a temperatura e portata costanti. Il chiller è composto da un sistema di refrigerazione raffreddato ad aria o ad acqua, uno scambiatore di calore, una pompa di ricircolazione, un serbatoio del fluido di processo e un controller a microprocessore.

I chiller sono progettati per il funzionamento continuo e per l'utilizzo in ambienti chiusi, in conformità con tutte le procedure e i requisiti definiti in questo manuale.

Installazione, chiller a ricircolazione:

Posizionare il chiller in modo che sia vicino ed abbia un pratico accesso al suo dispositivo di disconnessione.

Il chiller deve essere utilizzato su una presa dedicata.

Assicurarsi che tutte le spine utilizzate per la spedizione nelle linee di tubazione siano state rimosse prima di procedere all'installazione.

Le connessioni per il fluido di processo si trovano sul retro del chiller e sono etichettati  (PROCESS OUTLET) e 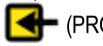 (PROCESS INLET). Collegare  all'ingresso del fluido sull'applicazione. Collegare  all'uscita del fluido sull'applicazione.

Per i chiller raffreddati ad acqua collegare  (FACILITY INLET) all'alimentazione idraulica dell'impianto. Collegare  (FACILITY OUTLET) al ritorno o scarico dell'acqua dell'impianto.

Prima di avviare il chiller, ricontrollare tutte le linee di comunicazione e le connessioni elettriche e delle tubazioni.

BG

Важни инструкции за безопасност
Рециркулационни охладители

Ако някоя от тези инструкции не бъде разбрана, се обърнете към ръководството или се свържете с нас, преди да продължите.

Безопасност, всички продукти:

⚠ DANGER указва непосредствено опасна ситуация, която, ако не бъде избегната, ще доведе до смърт или тежка телесна повреда.

⚠ WARNING указва потенциално опасна ситуация, която, ако не бъде избегната, може да доведе до смърт или тежка телесна повреда.

⚠ CAUTION указва потенциално опасна ситуация, която, ако не бъде избегната, може да доведе до лека или средна телесна повреда. Също така се използва, за да предупреждава срещу опасни практики.

 предназначен да предупреждава потребителя за наличие на неизолирано "опасно напрежение" в рамките на корпуса на охладителя. Величината на напрежението е достатъчно значима, за да поражда риск от електрически удар.

 указва наличието на горещи повърхности.

 указва, че ръководството трябва да се прочете.

Не използвайте оборудването като стерилно устройство или устройство, свързано с пациенти. В допълнение устройството не е предназначено за употреба в клас I, II или III опасни места, както е определено от Националния закон за електричеството на САЩ (NEC).

Оборудването е предназначено само за употреба в закрити помещения. Никога не го поставяйте на място, където са налице прекомерна топлина, влага, лоша вентилация или корозивни материали. Вижте ръководството за експлоатационните параметри.

Свържете оборудването към правилно заземен контакт.

Използваните хладилни агенти са по-тежки от въздуха и, ако има теч, те ще заменят кислорода, причинявайки загуба на съзнание. Контактът с изтичащ хладилен агент ще предизвика изгаряния на кожата. Направете справка с фирмената табела на циркулатора за типа на използвания хладилен агент, след което към най-актуалния информационен лист за безопасност на САЩ (SDS) от производителя, известен преди като MSDS, и също така и към информационния лист за безопасност на ЕС, за допълнителна информация.

Преместваите оборудването внимателно. Внезапни сътресения или изпускания могат да повредят компонентите му. Винаги изключвайте устройството и го разкачвайте от неговото захранващо напрежение, преди да го преместите.

Никога не експлоатирайте повредено оборудване или оборудване с течове.

Никога не използвайте запалими или корозивни течности. Използвайте само одобрените течности, посочени в ръководството. Преди да се използва каквато и да било течност или да се прави поддръжка, където е вероятно да има контакт с течността, направете справка с най-актуалния информационен лист за безопасност на САЩ (SDS) от производителя, както и информационния лист за безопасност на ЕС, за допълнителна информация.

Винаги изключвайте устройството и го разкачвайте от неговото захранващо напрежение преди преместване.

За обслужване и ремонтни дейности се обърнете към квалифициран техник.

Съхранявайте оборудването при температура от –25°C до 60°C (с опаковката) и <80% относителна влажност.

Извеждането от експлоатация трябва да се извършва само от квалифициран дилър, като се използва сертифицирано оборудване. Всички действащи разпоредби трябва да се спазват.

Извършване на монтаж, експлоатация или процедури за поддръжка, различни от тези, описани в ръководството, може да доведе до опасна ситуация и ще анулира гаранцията на производителя.

Никога да не се прилага линейно напрежение към някоя от комуникационните връзки на охладителя.

Непълното запълване на охладителя и на технологичните тръбопроводи за течности може да повреди помпата на охладителя. Избягвайте препълването, защото течностите се разширяват при нагряване.

За ThermoFlex, преди да подмените корпуса на резервоара, се уверете, че топката-запушалка на контролната тръба на резервоара е надлежно поставена на място.

За ThermoFlex900-5000 не експлоатирайте охладителя, освен ако не е инсталиран дифузерът за течности на резервоара.

Ако охладителят е оборудван с обемна нагнетателна помпа (P1 или P2), се уверете, че водопроводните тръби и фитинги на приложението са проектирани да издържат минимум 185 psi.

Не използвайте антифриз от автомобилната индустрия. Серийният антифриз съдържа силикати, които увреждат уплътненията на помпата.

За да се предотврати замръзването/гланциране на пластинния топлообменник, охладителите ThermoFlex7500-24000 изискват употребата на 50/50 EG/вода или 50/50 PG/вода с температура за обработка под 10°C.

Когато се използва смес от технологична течност от EG/вода или PG/вода, редовно проверявайте концентрацията на течността и pH. Промените в концентрацията и pH могат да окажат влияние върху производителността на системата.

Не използвайте дейонизиращ (DI) патронен филтър с инхибирана EG или инхибирана PG. DI филтърът ще премахне инхибиторите от разтвора, правейки течността неефективна при защита от корозия. Също така инхибиторите повишават проводимостта на течностите.

Биоцидите са корозивни и могат да предизвикат необратими увреждания на очите и изгаряния на кожата. Те са вредни при вдишване, поглъщане или абсорбирани през кожата. Направете справка с най-актуалния SDS на производителя.

За да се предотврати повреда на пластинния топлообменник на охладителя, центробежните помпи изискват 4,0 gpm (15,1 lpm) минимален дебит.

Непочистването/неподмяната на кондензаторния филтър ще причини загуба на капацитета на охлаждане и ще доведе до преждевременна повреда на охлаждащата система. За цялостно почистване извадете модула на предната решетка.

При охладителите с въздушно охлаждане рамките и перките на кондензатора, разположени зад модула на предната решетка, са много остри.

Освен модула на решетката за въздушно охлаждане, никога не експлоатирайте охладителя с който и да било друг отстранен панел.

Охладителите ThermoFlex900-5000 с водно охлаждане имат вентилатор с остри перки и затова се уверете, че охладителят е изключен, преди да премахнете предната решетка.

Предназначена употреба, рециркулационни охладители:

Рециркулационните охладители на Thermo Scientific са предназначени да осигуряват непрекъснато подаване на течност при постоянна температура и дебит. Охладителят се състои от хладилна система с въздушно охлаждане или водно охлаждане, топлообменник, рециркулационна помпа, резервоар за технологична течност и микропроцесорен контролер.

Охладителите са предназначени за непрекъсваема експлоатация и за употреба на закрито в съответствие с всички процедури и изисквания, посочени в съответното ръководство.

Монтиране, рециркулационни охладители:

Разположете охладителя, така че да е близо и да има лесен достъп до устройството му за изключване.

Охладителят е предназначен за употреба с отделен контакт.

Уверете се, че всички тапи за транспортиране на водопроводните тръби са отстранени преди монтажа.

Връзките на технологичната течност се намират на гърба на охладителя и са отбелязани с етикети  (ТЕХНОЛОГИЧЕН ИЗХОД) и  (ТЕХНОЛОГИЧЕН ВХОД). Свържете  към входа за течности на вашето приложение. Свържете  към изхода за течности на вашето приложение.

За охладители с водно охлаждане свържете  (ВХОД ЗА ПРОМИШЛЕНА) към източника на промишлена вода. Свържете  (ИЗХОД ЗА ПРОМИШЛЕНА) към връщащата тръба за промишлена вода или канала.

Преди да стартирате охладителя, проверете отново всички приложими комуникационни, електрически и водопроводни връзки.

CS

Základní bezpečnostní pokyny Recirkulační chladiče

Pokud některým z těchto pokynů nebudete rozumět, nahlédněte před pokračováním do návodu k obsluze nebo nás kontaktujte.

Bezpečnost, všechny produkty:

DANGER Značí bezprostředně nebezpečnou situaci, která pokud nebude odstraněna, povede ke smrtelnému nebo závažnému úrazu.

WARNING Značí potenciálně nebezpečnou situaci, která pokud nebude odstraněna, může vést ke smrtelnému nebo závažnému úrazu.

CAUTION Značí potenciálně nebezpečnou situaci, která pokud nebude odstraněna, může vést k méně až středně závažnému úrazu. Slouží také jako výstraha před nebezpečnými postupy.

 Slouží k upozornění uživatele na přítomnost neizolovaného „nebezpečného napětí“ v krytu chladicího zařízení. Napětí je dostatečně vysoké na to, aby představovalo riziko úrazu elektrickým proudem.

 Značí přítomnost horkých povrchů.

 Značí, že si má obsluha přečíst návod k obsluze.

Vybavení nepoužívejte jako sterilní zařízení nebo zařízení připojené k pacientovi. Zařízení navíc není určeno k používání v rizikových lokalitách třídy I, II nebo III podle národních elektrotechnických předpisů.

Zařízení je navrženo pouze pro používání ve vnitřních prostorách. Nikdy ho neumisťujte do míst, kde je nadměrné teplo, vlhkost, nedostatečná ventilace nebo kde se nachází korozivní materiály. Provozní parametry jsou uvedené v návodu k obsluze.

Připojte zařízení k řádně uzemněné zásuvce.

Použitá chladiva jsou těžší než vzduch a pokud dojde k jejich úniku, vytlačí veškerý vzduch a způsobí ztrátu vědomí. Kontakt s unikajícím chladivem způsobí popálení pokožky. Typ použitého chladiva zjistíte na štítku s technickými údaji cirkulačního termostatu a další informace jsou uvedeny v aktuálním bezpečnostním listu výrobce.

Při stěhování zařízení buďte opatrní. Náhlé nárazy nebo pády mohou poškodit jeho součásti. Před stěhováním zařízení vždy vypněte a odpojte ho od přívodu napájení.

Nikdy nepoužívejte poškozené nebo netěsné zařízení.

Nikdy nepoužívejte hořlavé nebo korozivní kapaliny. Používejte pouze schválené kapaliny uvedené v návodu k obsluze. Před použitím nějaké kapaliny nebo před prováděním údržby, kde je pravděpodobné, že přijdete s touto kapalinou do styku, si zjistěte další informace v aktuálním bezpečnostním listu výrobce.

Před stěhováním zařízení vždy vypněte a odpojte ho od přívodu napájení.

Servis a opravy přenechejte kvalifikovaným servisním technikům.

Skladujte zařízení při teplotách -25°C až 60°C (v obalu), a při relativní vlhkosti vzduchu nižší než 80 %.

Vyřazení z provozu smí provádět pouze kvalifikovaný prodejce s pomocí certifikovaného vybavení. Musí být dodržena veškerá platná nařízení.

Provádění jiných postupů při instalaci, obsluze nebo údržbě, než které jsou popsány v návodu k obsluze, může vést k nebezpečným situacím a způsobí zneplatnění záruky výrobce.

Nikdy nepřivádějte elektrické napětí k žádným komunikačním konektorům chladicího zařízení.

Když není chladicí zařízení a potrubí kompletně naplněné chladicí kapalinou, může dojít k poškození čerpadla. Zařízení nepřeplňujte, kapaliny při zahřátí nabývají na objemu.

V případě zařízení ThermoFlex se před výměnou krytu nádržky přesvědčte, jestli je bezpečně na svém místě kuličková zarážka trubicového průzoru.

Zařízení ThermoFlex900-5000 neuvádějte do provozu, dokud není nainstalovaný difuzér kapaliny v nádržce.

Pokud je chladicí zařízení vybavené objemovým čerpadlem (P1 nebo P2), přesvědčte se, jestli hadice, potrubí a spojky vaší instalace vydrží tlak minimálně 185 psi.

Nepoužívejte automobilový odmrazovač. Běžně prodávané odmrazovače obsahují silikáty, které poškodí těsnění čerpadla.

Aby nedocházelo k zamrznutí deskového výměníku nebo jeho pokrytí ledem, chladicí zařízení ThermoFlex7500-24000 vyžadují používání směsi etylenglykolu a vody v poměru 1:1 nebo směsi propylenglykolu a vody v poměru 1:1 s procesní teplotou nižší než 10 °C.

Při používání směsi etylenglykolu a vody nebo propylenglykolu a vody pravidelně kontrolujte koncentraci kapaliny a pH. Změny v koncentraci a pH mohou mít vliv na výkon systému. Nepoužívejte kazetu deionizačního filtru s inhibovaným etylenglykolem nebo inhibovaným propylenglykolem.

Deionizační filtr z roztoku odstraní inhibitory, takže kapalina přestane narušovat antikorozní ochranu. Biocidní přípravky jsou korozivní a mohou způsobit nevratné poškození očí a popáleniny pokožky. Při vdechnutí, spolknutí nebo vstřebání pokožkou jsou škodlivé. Podívejte se do aktuálních bezpečnostních listů výrobce.

Aby nemohlo dojít k poškození deskového výměníku chladicího zařízení, vyžadují odstředivá čerpadla minimální průtok 15,1 l/m).

Nedostatečně vyčištěný nebo nevyměněný filtr kondenzátoru způsobuje ztrátu chladicí kapacity a vede k předčasnému selhání systému.

V zájmu důkladného vyčištění demontujte přední mřížku. U vzduchem chlazených chladičů jsou rám kondenzátoru a jeho žebra za přední mřížkou velmi ostré.

V případě mřížky chlazené jinak než vzduchem nikdy chladicí zařízení nepoužívejte s demontovanými panely.

Vodou chlazené chladiče ThermoFlex900-5000 mají ventilátor s ostrými lopatkami, takže se před demontáží přední mřížky přesvědčte, že je chladič vypnutý.

Určené použití, recirkulační chladiče:

Recirkulační chladiče společnosti Thermo Scientific jsou navrženy pro zajišťování nepřetržitého přívodu kapaliny při konstantní teplotě a konstantním průtoku. Chladič se skládá ze vzduchem chlazeného nebo vodou chlazeného chladicího systému, tepelného výměníku, recirkulačního čerpadla, nádržky na procesní kapalinu a řídicí jednotky s mikroprocesorem.

Chladiče jsou navrženy pro nepřetržitý provoz a používání ve vnitřních prostorách v souladu se všemi postupy a požadavky, uvedenými v jejich návodech k obsluze.

Instalace, recirkulační chladiče:

Umístěte chladič tak, aby byl v blízkosti svého odpojovacího zařízení a aby byl k odpojovacímu zařízení snadný přístup.

Chladicí zařízení č je určen pro používání se samostatným výstupem.

Před instalací musí být odstraněny všechny přepravní zátky na potrubích a hadicích.

Přípojky procesní kapaliny jsou umístěné na zadní části chladiče a jsou označené  (PROCESS OUTLET – procesní výstup) a  (PROCESS INLET – procesní přívod). Připojte  k přívodu kapaliny na zařízení. Připojte  k výstupu kapaliny na zařízení.

V případě vodou chlazených chladičů připojte  (FACILITY INLET – přívod ze závodu) k přívodu vody ze závodu. Připojte  (FACILITY OUTLET – výstup kapaliny do závodu) k odtoku vody v závodu.

Před spuštěním chladiče překontrolujte příslušné komunikační a elektrické přípojky a připojovací armatury.

DA

Essentiel sikkerhedsvejledning
Recirkulerende nedkølere

Hvis nogle af disse instrukser ikke kan forstås, så referer til manualen, eller kontakt os, før du fortsætter.

Sikkerhed, alle produkter:

⚠ DANGER Indikerer en omgående farlig situation, som, hvis den ikke undgås, vil resultere i død eller alvorlig skade.

⚠ WARNING Indikerer en potentielt farlig situation, som, hvis den ikke undgås, vil resultere i død eller alvorlig skade.

⚠ CAUTION indikerer en potentielt farlig situation, som, hvis den ikke undgås, kan resultere i mindre eller moderat skade. Den bruges også til at advare mod usikre fremgangsmåder.

 beregnet til at advare brugeren om tilstedeværelsen af ikke-isoleret "farlig spænding" inden for nedfkølerens indelukke. Spændingens styrke er markant nok til at udgøre risiko for elektrisk stød.

 indikerer tilstedeværelsen af varme overflader.

 indikerer læs manualen.

Brug ikke udstyret som en steril eller patientforbundet enhed. Derudover er udstyret ikke designet til brug i Klasse I, II eller III farlige steder som defineret af National Electrical Code.

Udstyret er kun designet til indendørs brug. Placer det aldrig et sted, hvor der findes overdreven varme, fugtighed, utilstrækkelig ventilation eller ætsende materialer. Referer til manualen for driftsparametre.

Forbind udstyret til en korrekt jordet stikkontakt.

Kølemidler, der bruges her, er tungere end luft, og hvis der er en læk, vil det erstatte oxygenet, hvilket forårsager tab af bevidsthed. Kontakt med lækkende kølemidler vil forårsage hudforbrændinger. Referer til cirkulatorens navneplade for den type kølemiddel, der bruges, og så producentens mest aktuelle amk. sikkerhedsdatark (SDS), tidligere kendt som MSDS, og EUs sikkerhedsdataark for yderligere oplysninger.

Flyt udstyret forsigtigt. Pludselige stød eller tab kan beskadige dets komponenter. Sluk altid udstyret, og afbryd det fra dets strømforsyning, før det flyttes.

Betjen aldrig beskadiget eller lækkende udstyr.

Brug aldrig brændbare eller ætsende væsker. Brug kun tilladte væsker, der er angivet i manualen. Før du bruger nogen væske eller udfører vedligeholdelse, hvor kontakt med væsken er sandsynlig, skal du referere til producentens mest aktuelle amk. sikkerhedsdatablad (SDS) og EUs sikkerhedsdatablad for yderligere oplysninger.

Sluk altid udstyret, og afbryd det fra dets strømforsyning, før det flyttes.

Henvis vedligeholdelse og reparation til en kvalificeret tekniker.

Opbevar udstyret i et temperaturinterval på -25 °C til 60 °C (med indpakning), og <80 % relativ luftfugtighed.

Dekommissionering skal kun udføres af en kvalificeret forhandler, der bruger certificeret udstyr. Alle aktuelle regulativer skal følges.

Udførelse af installation, drift eller vedligeholdelsesprocedurer andre end dem, der er beskrevet i denne manual, kan resultere i en farlig situation og vil annullere producentens garanti.

Påfør aldrig linjespænding til nogen kommunikationsforbindelse på nedkøleren.

Hvis du ikke fylder nedkøler- og procesvæskelinjer helt, kan det beskadige nedkølerens pumpe. Undgå at overfylde. Væsker ekspanderer, når de varmes op.

På ThermoFlex, før du erstatter reservoir-kabinettet, skal du sikre, at den synlige reservoir-rørkuglestopper er sikkert på plads.

På ThermoFlex900-5000 må du ikke betjene nedkøleren, før reservoir-væskediffuseren er installeret.

Hvis din nedkøler er udstyret med en positiv forskydningspumpe (P1 or P2), skal du sikre, at din applikation af rørlinjer og beslag er vurderet til at modstå et minimum af 185 psi

Benyt ikke automotiv kølervæske. Kommerciel kølervæske indeholder silikater, der skader pumpeforseglingen.

For at forebygge frysning/glasering af pladeudveksleren kræver ThermoFlex7500-24000 nedkølere brug af 50/50 EG/vand eller 50/50 PG/vand under 10 °C procestemperatur.

Når du bruger en procesvæskemikstur af EG/vand eller PG/vand, skal du kontrollere væskekoncentrationen og pH jævnligt. Ændringer i koncentrationen og pH kan have indflydelse på systemydelsen.

Brug ikke en deioniserings (DI) filterpatron med inhiberet EG eller inhiberet PG. Et DI-filter vil fjerne inhibitorer fra opløsningen, hvilket gør væsken ineffektiv mod beskyttelse mod korrosion. Inhibitorer forøger også væskens ledeevne.

Biocider er ætsende og kan forårsage irreversibel øjeskade og hudforbrændinger. De er skadelige, hvis de inhaleres, sluges eller absorberes gennem huden. Referer til producentens mest aktuelle SDS.

For at forebygge skade på nedkølerens pladeudveksler kræver centrifugalpumper en minimumstrømrate på 4,0 gpm (15,1 lpm).

Hvis kondensatoren ikke rengøres/udskiftes, kan det forårsage et tab af kølekapacitet og føre til tidlig fejlfunktion af kølesystemet. For en grundig rengøring skal du fjerne frontristsamlingen.

På luftkølede nedkølere er kondensatorramme og -finner bag frontristsamlingen meget skarpe.

Ud over den luftkølede ristsamling må du aldrig betjene nedkøleren med nogen aftagne paneler.

ThermoFlex900-5000 vandkølede nedkølere har en blæser med skarpe klinger, så sørg for, at nedkøleren er slukket, før frontristen fjernes.

Tilsigtet brug, recirkulerende nedkølere:

Thermo Scientific recirkulerende nedkølere er designet til at yde en løbende væskeforsyning ved en konstakt temperatur og strømningsrate. Nedkøleren består af et luftkølet eller vandkølet kølesystem, varmeveksler, recirkuleringspumpe, procesvæskereservoir og en mikroprocessor-controller.

Nedkølere er designet til løbende drift og til indendørs brug i henhold til alle procedurerne og kravene formuleret i denne håndbog.

Installation, recirkulerende nedkølere:

Placer nedkøleren, så den er nær, og har nem adgang til, dens afbryderenhed.

Nedkøleren er beregnet til brug i en dedikeret strømkontakt.

Sørg for, at alle vvs-linjers shipping-stik fjernes før installation.

Procesvæskeforbindelserne befinder sig bag på nedkøleren og er markeret  (PROCESS OUTLET) og  (PROCESS INLET). Forbind  til væskeindtaget på din applikation. Forbind  til væskeudløbet på din applikation.

For vandkølede nedkølere skal du forbinde  (FACILITY INLET) til din facilitets vandforsyning. Forbind  (FACILITY OUTLET) til din facilitets vandreturnering eller afløb.

Før du starter nedkøleren, skal du kontrollere alle relevante kommunikations-, elektriske og vvs-forbindelser en ekstra gang.

EL

Βασικές οδηγίες ασφαλείας
Ψύκτες επανακυκλοφορίας

Εάν οποιαδήποτε από αυτές τις οδηγίες δεν είναι κατανοητή, ανατρέξτε στο εγχειρίδιο ή επικοινωνήστε μαζί μας πριν προχωρήσετε.

Ασφάλεια, όλα τα προϊόντα:

⚠ DANGER Υποδεικνύει άμεση κατάσταση κινδύνου που αν δεν αποφευχθεί, μπορεί να προκαλέσει θάνατο ή σοβαρό τραυματισμό.

⚠ WARNING Υποδεικνύει δυνητικά επικίνδυνη κατάσταση που αν δεν αποφευχθεί, μπορεί να προκαλέσει θάνατο ή σοβαρό τραυματισμό.

⚠ CAUTION Υποδεικνύει δυνητικά επικίνδυνη κατάσταση που αν δεν αποφευχθεί, μπορεί να προκαλέσει μικρό ή ήπιο τραυματισμό. Μπορεί να χρησιμοποιηθεί και ως προειδοποίηση μη ασφαλών πρακτικών.

για την προειδοποίηση του χρήστη σχετικά με την παρουσία μην-μονωμένης "επικίνδυνης τάσης" μέσα στο περίβλημα του ψύκτη. Το μέγεθος της τάσης είναι αρκετά σημαντικό ώστε να αποτελέσει κίνδυνο ηλεκτροπληξίας.

υποδεικνύει την παρουσία ζεστών επιφανειών

υποδεικνύει ανάγνωση του εγχειριδίου.

Μη χρησιμοποιείτε τον εξοπλισμό ως αποστειρωμένη συσκευή ή συσκευή συνδεδεμένη με τον ασθενή. Επιπλέον, ο εξοπλισμός δεν έχει σχεδιαστεί για χρήση στην Κατηγορία I, II ή III Επικίνδυνες Θέσεις από τον Εθνικό Ηλεκτρολογικό Κώδικα.

Ο εξοπλισμός έχει σχεδιαστεί για χρήση σε εσωτερικούς χώρους. Μην τοποθετείται ποτέ σε τοποθεσία με υπερβολική θερμότητα, υγρασία, ανεπαρκή αερισμό ή διαβρωτικά υλικά. Ανατρέξτε στις λειτουργικές παραμέτρους του εγχειριδίου.

Συνδέστε τον εξοπλισμό σε κατάλληλα γειωμένη έξοδο.

Τα ψυκτικά που χρησιμοποιούνται είναι βαρύτερα από τον αέρα και εάν υπάρχει διαρροή, θα αντικαταστήσουν το οξυγόνο και θα προκαλέσουν απώλεια αισθήσεων. Η επαφή με ψυκτικό διαρροής θα προκαλέσει εγκαύματα στο δέρμα. Ανατρέξτε στην πινακίδα για τον τύπο του ψυκτικού που χρησιμοποιείται και το τρέχον Φύλλο Δεδομένων Ασφαλείας Η.Π.Α (SDS) γνωστά ως MSDS και το Φύλλο Δεδομένων Ασφάλειας Ε.Ε. για περισσότερες πληροφορίες.

Μετακινείστε τον εξοπλισμό με προσοχή. Ξαφνικά τραντάγματα ή πτώσεις ενδέχεται να προκαλέσει βλάβες στα εξαρτήματα. Πάντα σβήνετε τον εξοπλισμό και αποσυνδέστε τον από την παροχή τάσης, πριν από τη μετακίνησή του.

Ποτέ μη λειτουργείτε εξοπλισμό που έχει υποστεί βλάβη ή παρουσιάζει διαρροές.

Ποτέ μη χρησιμοποιείτε εύφλεκτα ή διαβρωτικά υγρά. Χρησιμοποιήστε μόνο εγκεκριμένα υγρά που αναφέρονται στο εγχειρίδιο. Πριν χρησιμοποιήσετε οποιοδήποτε υγρό ή κατά τη διαδικασία της συντήρησης όπου η επαφή με το υγρό είναι πιθανή, ανατρέξτε στα Φύλλο Δεδομένων Ασφαλείας SDS και EC για περισσότερες πληροφορίες.

Πάντα σβήνετε τον εξοπλισμό και αποσυνδέστε τον από την παροχή τάσης, πριν από τη μετακίνησή του.

Για σέρβις και επισκευές απευθυνθείτε σε εξειδικευμένο τεχνικό.

Αποθηκεύστε τον εξοπλισμό σε θερμοκρασία μεταξύ -25°C και 60°C (με τη συσκευασία) και σε σχετική υγρασία <80%.

Η θέση εκτός λειτουργίας θα πρέπει να εκτελείται από εξειδικευμένο προμηθευτή με τη χρήση πιστοποιημένου εξοπλισμού. Όλοι οι κανονισμοί εν ισχύ θα πρέπει να τηρούνται.

Οι διαδικασίες εγκατάστασης, λειτουργίας ή συντήρησης εκτός από εκείνες που περιγράφονται στο εγχειρίδιο ενδέχεται να προκαλέσουν επικίνδυνες καταστάσεις και ακύρωση της εγγύησης του κατασκευαστή.

Ποτέ μην εφαρμόζετε τάση γραμμής σε οποιαδήποτε σύνδεση επικοινωνίας επί του ψύκτη.

Αν οι ψύκτες και οι γραμμές επεξεργασίας υγρού δεν είναι πλήρως γεμάτα, ενδέχεται να προκληθεί βλάβη στην αντλία του ψύκτη. Αποφύγετε την υπερχείλιση, τα υγρά διαστέλλονται όταν θερμαίνονται.

Στη διάταξη ThermoFlex, πριν την αντικατάσταση του περιβλήματος της δεξαμενής, βεβαιωθείτε ότι μπίλια του σωλήνα σκόπευσης έχει ασφαλιστεί στη θέση της.

Στο ThermoFlex900-5000, μη λειτουργείτε τον ψύκτη αν δεν έχει εγκατασταθεί ο διαχυτής υγρού της δεξαμενής.

Εάν ο ψύκτης σας έχει εξοπλιστεί με αντλία θετικού εκτοπίσματος (P1 ή P2), βεβαιωθείτε ότι οι υδραυλικές σωληνώσεις και οι συνδέσεις έχουν ρυθμιστεί έτσι ώστε να έχουν αντοχή σε ελάχιστο 185 psi.

Μη χρησιμοποιείτε αντιψυκτικό αυτοκινήτου. Τα αντιψυκτικά του εμπορίου περιέχουν πυρίτιο που προκαλεί ζημιά στις στεγανοποιήσεις.

Για την αποτροπή δημιουργίας πάγου/επικάλυψης στην πλάκα του εναλλάκτη, οι ψύκτες, ThermoFlex7500-24000 απαιτούν τη χρήση 50/50 EG/νερού ή 50/50 PG/νερό κάτω της θερμοκρασίας διαδικασίας των 10°C.Κατά τη χρήση μείγματος υγρού EG/νερού ή PG/νερού, ελέγχετε τη συγκέντρωση και το pH σε τακτά χρονικά διαστήματα.

Οι αλλαγές σε συγκέντρωση και pH ενδέχεται να επηρεάσουν τις επιδόσεις του συστήματα. Μη χρησιμοποιείτε φυσίγγιο φίλτρου απιονισμού (DI) με αναστολέα EG ή αναστολέα PG.

Ένα φίλτρο DI θα αφαιρέσει τους αναστολείς από το διάλυμα, καθιστώντας το υγρό αναποτελεσματικό κατά την προστασία από τη διάβρωση. Επίσης, οι αναστολείς αυξάνουν την αγωγιμότητα του υγρού.

Τα βιοκτόνα είναι διαβρωτικά και μπορούν να προκαλέσουν μη αναστρέψιμη βλάβη στα μάτια και εγκαύματα στο δέρμα. Είναι βλαβερά κατά την εισπνοή, την κατάποση και την απορρόφηση από το δέρμα. Ανατρέξτε στο τρέχον φύλλο SDS του κατασκευαστή.

Για να αποτρέψετε βλάβες στην πλάκα εναλλάκτη του ψύκτη, οι φυγόκεντρες αντλίες απαιτούν ελάχιστη ροή 4,0 gpm (15,1 lpm).

Ο μη καθαρισμός ή η μη αντικατάσταση του φίλτρου συμπυκνωτή προκαλεί απώλεια ικανότητας ψύξης και θα οδηγήσει σε πρώιμη αστοχία του συστήματος ψύξης. Για καλό καθαρισμό αφαιρέστε την εμπρός γρίλια της συναρμογής.

Σε αερόψυκτους ψύκτες το πλαίσιο του συμπυκνωτή και τα πτερύγια που βρίσκονται πίσω από την εμπρός σχάρα είναι πολύ κοφτερά.

Εκτός από την αερόψυκτη συναρμογή της γρίλιας, ποτέ μην λειτουργείτε τον ψύκτη με βγαλμένα τα πλαίσια.

Οι υδρόψυκτοι ψύκτες ThermoFlex900-5000 έχουν έναν ανεμιστήρα με κοφτερές λεπίδες, βεβαιωθείτε ότι ο ψύκτης είναι σβηστός πριν αφαιρέσετε την εμπρός γρίλια.

Προοριζόμενη χρήση, Ψύκτες επανακυκλοφορίας:

Οι ψύκτες επανακυκλοφορίας Thermo Scientific έχουν σχεδιαστεί για να παρέχουν συνεχή παροχή υγρού σε σταθερή θερμοκρασία και ροή. Ο ψύκτης αποτελείται από ένα αερόψυκτο ή υδρόψυκτο σύστημα ψύξης, έναν εναλλάκτη θερμότητας, μία αντλία επανακυκλοφορίας, μία δεξαμενή υγρού και έναν ελεγκτή μικροεπεξεργαστή.

Οι ψύκτες έχουν σχεδιαστεί για συνεχόμενη λειτουργία σε εσωτερικούς χώρους σύμφωνα με τις διαδικασίες και τις απαιτήσεις που ορίζει το παρόν εγχειρίδιο.

Εγκατάσταση, Διατάξεις ψύξης επανακυκλοφορίας:

Τοποθετήστε τη διάταξη ψύξης έτσι ώστε να είναι κοντά, με εύκολη στη διάταξη αποσύνδεσης.

Ο ψύκτης προορίζεται για χρήση σε αντίστοιχη έξοδο.

Βεβαιωθείτε ότι όλα τα πώματα συσκευασίας στις υδραυλικές σωληνώσεις έχουν αφαιρεθεί πριν την εγκατάσταση.

Οι συνδέσεις υγρού της διαδικασίας βρίσκονται στο πίσω μέρος του ψύκτη και έχουν ετικέτα  (ΕΞΟΔΟΣ ΔΙΑΔΙΚΑΣΙΑΣ) και  (ΕΙΣΟΔΟΣ ΔΙΑΔΙΚΑΣΙΑΣ). Συνδέστε το  στην είσοδο του υγρού της εφαρμογής σας. Συνδέστε το  στην έξοδο του υγρού της εφαρμογής σας

Για υδρόψυκτους ψύκτες συνδέστε το  (ΕΙΣΟΔΟΣ ΧΡΗΣΗΣ) στην παροχή νερού χρήσης. Συνδέστε την  (ΕΞΟΔΟ ΧΡΗΣΗΣ) στην επιστροφή νερού χρήσης ή στην αποστράγγιση.

Πριν την έναρξη του ψύκτη, ελέγξτε με προσοχή την επικοινωνία και τις ηλεκτρικές και υδραυλικές συνδέσεις.

ET

Olulised ohutusjuhised Ringlusega jahutid

Kui mistahes juhised ei ole arusaadavad, siis enne jätkamist vaadake kasutusjuhendit.

Ohutus, kõik tooted:

⚠ DANGER tähistab otsest ohtlikku olukorda, millele tähelepanu pööramata jätmine võib põhjustada surma või tõsise vigastuse.

⚠ WARNING tähistab potentsiaalselt ohtlikku olukorda, millele tähelepanu pööramata jätmine võib põhjustada surma või tõsise vigastuse.

⚠ CAUTION tähistab potentsiaalselt ohtlikku olukorda, millele tähelepanu pööramata jätmine võib põhjustada väiksema või keskmise raskusega vigastuse. Seda kasutatakse ka ohtlikust tegevusest hoiatamiseks.

ettenähtud kasutaja hoiatamiseks jahuti korpuses olevast isoleerimata "ohtlikust pingest". Pinge tugevus on piisav elektrilöögi tekitamiseks.

tähistab kuumade pindade olemasolu.

tähistab kasutusjuhendi vaatamise vajadust.

Ärge kasutage seadmeid steriilsete seadmetena või patsiendiga ühendatavate seadmetena. Lisaks eelnevale, ei ole seadmed ettenähtud kasutamiseks I, II või III klassi ohtlikes rakendustes vastavalt NEC nõuetele.

Seadmed on ettenähtud kasutamiseks ainult siseruumides. Ärge kunagi paigutage ülemäärase kuumusega, niiskusega, ebapiisava ventilatsiooniga kohtadesse või söövitavate materjalide lähedale. Vaadake tööparameetreid kasutusjuhendist.

Ühendage seade nõuetekohaselt maandatud seinapistikuga.

Kasutatavad jahutusained on õhust raskemad ning tõrjuvad lekke korral õhu välja ning võivad põhjustada meelemärkuse kadu. Lekkiva jahutusainega kokkupuutumine põhjustab nahapõletusi. Lisateabeks kasutatava jahutusaine kohta vaadake ringluspumba andmeplaati ja tootja kõige hilisemat ohutuskaarti (SDS, MSDS, EL ohutuskaart).

Liigutage seadet ettevaatlikult. Ootamatud põrutused ja kukkumised võivad kahjustada seadme komponente. Enne seadme liigutamist lülitage seade alati välja ja ühendage lahti toitevõrgust.

Ärge kasutage kunagi kahjustatud või lekkivaid seadmeid.

Ärge kasutage kunagi süttimisohtlikke või söövitavaid vedelikke. Kasutage ainult kasutusjuhendis heakskiidetud vedelikke. Enne mistahes vedelike kasutamist või hooldustööde läbiviimist vaadake lisateabeks tootja kõige hilisemat ohutuskaarti (SDS, MSDS, EL ohutuskaart).

Enne seadme liigutamist lülitage seade alati välja ja ühendage lahti toitevõrgust.

Hooldamisel ja remondi korral pöörduge kogemustega tehniku poole.

Hoidke seadmeid temperatuurivahemikus -25°C kuni 60°C (pakendis) ja <80% suhtelise niiskuse juures.

Kasutusest eemaldamisel pöörduge sertifitseeritud seadmeid kasutava kogemustega ettevõtte poole. Järgige kõiki kehtivaid eeskirju.

Kasutusjuhendis kirjeldamata paigaldamis-, töötamis- või hooldusprotseduurid võivad kaasa tuua ohtliku olukorra ning muudavad garantii kehtetuks.

Äge kunagi rakendage võrgupinget jahuti mistahes andmesideühendustele.

Täielikult täitmata jahuti ja töövedeliku torustik või põhjustada jahuti pumba kahjustamist. Vältige ületäitmist, soojenemisel vedelikud paisuvad.

Enne ThermoFlex seadmel mahuti katte asendamist veenduge, et mahuti vaatetoru kuuli kork on kindlalt oma kohas.

Ärge kasutage ThermoFlex900-5000 seadmel jahutit enne, kui on paigaldatud mahuti vedeliku difuuser.

Kui Teie jahuti on varustatud mahtpumbaga (P1 või P2), siis veenduge, et Teie seadme torustik ja liitmikud taluvad vähemalt 185 psi survet.

Vältige MD pumpadega varustatud Merlin jahutitel torustikus jahutusvedeliku voolu täielikku takistamist. Tühjalt töötav pump kahjustab liitekohta ning võib põhjustada pumba kahjustamist.

Ärge kasutage sõidukite jahutusvedelikku. Kaubanduses kättesaadavad jahutusvedelikud sisaldavad silikaate, mis kahjustavada pumba tihendeid.

Plaatsoojusvaheti külmumise ärahoidmiseks vajavad ThermoFlex7500-24000 jahutid temperatuuridel 10°C alla töötemperatuuri 50/50 EG/vesi või 50/50 PG/vesi kasutamist.

Kui kasutate töövedelikuna EG/vesi või PG/vesi segu, siis kontrollige regulaarselt kontsentratsiooni ja pH-taset. Kontsentratsiooni ja pH-taseme muutused võivad mõjutada süsteemi töötamist.

Ärge kasutage deioniseerimise (DI) filtrikassetti koos inhibeeritud EG-ga või inhibeeritud PG-ga. DI filter eemaldab lahusest inhibiitorid, vähendades vedeliku korrosioonivastast mõju. Lisaks sellele suurendavad inhibiitorid vedeliku juhitavust.

Nad on ohtlikud sissehingamisel, allaneelamisel ja imendumisel läbi naha. Vaadake tootja kõige hilisemat ohutuskaarti.

Jahuti plaatsoojusvaheti kahjustamise ärahoidmiseks peab tsentrifugaalpumba minimaalne voolukiirus olema 4,0 gpm (15,1 liitrit/minutis).

Kondensaatori filtri puhastamise/asendamise nõuete mittejärgimine põhjustab jahutusvõimsuse vähenemise ja jahutussüsteemi enneaegse purunemise. Põhjalikuks puhastamiseks eemaldage esivõre.

Õhkjahutusega jahutite esivõre taga asuva kondensaatori raamistik ja ribid on väga teravad.

Ärge kunagi kasutage eemaldatud paneelidega jahutit.

ThermoFlex900-5000 vesijahutusega jahutitel on teravate labadega ventilaator, enne esivõre eemaldamist veenduge, et jahuti on välja lülitatud.

Kasutuseesmärk, ringlusega jahutid:

Thermo Scientific ringlusega jahutid on ettenähtud pideva temperatuuriga ja voolukiirusega vedeliku voolamise tagamiseks. Jahuti koosneb õhkjahutusega või vesijahutusega jahutussüsteemist, soojusvahetist, ringluspumbast, töövedeliku mahutist ja mikroprotsessoriga juhtimissüsteemist.

Jahutid on ettenähtud pidevaks töötamiseks sisetingimuteses vastavalt kasutusjuhendis sätestatud protseduuridele ja nõuetele.

Paigaldamine, ringlusega jahutid:

Paigutage jahuti nii, et selle väljalülitamise seadmele on lihtne juurde pääseda.

Jahutile peab olema ettenähtud eraldi seinakontakt.

Veenduge, et torustiku transpordikorgid on enne paigaldamist eemaldatud.

Töövedeliku ühendused asuvad jahuti tagaosas ning on tähistatud 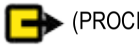 (PROCESS OUTLET) (sisend) ja 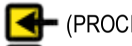 (PROCESS INLET) (väljund). Ühendage 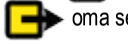 oma seadme vedeliku sisendiga. Ühendage  oma seadme vedeliku väljundiga.

Vesijahutusega jahutite korral ühendage  (FACILITY INLET)(seadme sisend) oma seadme veevarustususega. Ühendage 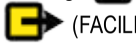 (FACILITY OUTLET) (seadme väljund) oma seadme veetagastusega või äravooluga.

Enne jahuti käivitamist kontrolliga üle kõik kasutatavad andmesideühendused, elektriühendused ja toruühendused.

FI

Olennaiset turvaohjeet
Kiertojäähdyttimet

Jos nämä ohjeet eivät ole selviä, viittaa ohjekirjaan tai ota meihin yhteyttä ennen kuin jatkat eteenpäin.

Turvallisuus, kaikki tuotteet:

DANGER osoittaa välitöntä vaaratilannetta, joka johtaa kuolemaan tai vakavaan loukkaantumiseen, ellei sitä vältetä.

WARNING osoittaa potentiaalisen vaaratilanteen, joka voi johtaa kuolemaan tai vakavaan loukkaantumiseen, ellei sitä vältetä.

CAUTION osoittaa potentiaalisen vaaratilanteen, joka saattaa aiheuttaa pienen tai kohtalaisen vamman, ellei sitä vältetä. Sitä käytetään varoittamaan myös vaarallisista tavoista.

tarkoitettu varoittamaan käyttäjää eristämättömästä "vaarallisesta jännitteestä" jäähdyttimen kotelon sisällä. Jännitteen voimakkuus on merkittävä sähköiskuvaaran aiheuttamiseksi.

osoittaa kuumien pintojen paikallaoloa.

osoittaa ohjekirjan lukemiseen liittyvää velvoitusta.

Älä käytä laitetta steriilinä varusteena tai potilaaseen yhdistettynä. Laitetta ei ole suunniteltu käytettäväksi National Electrical Code -sääntöjen mukaisesti I, II tai III luokan tiloissa.

Laite on tarkoitettu käytettäväksi vain sisätiloissa. Älä koskaan sijoita sitä paikkoihin joissa esiintyy liiallista kuumuutta, kosteutta, riittämätön tuuletus tai syövyttäviä materiaaleja. Viittaa ohjekirjaan käyttöparametrejä varten.

Liitä laite maadoitettuun pistorasiaan.

Käytetyt jäähdytysaineet ovat ilmaan verrattuna painavampia, ja jos vuotoa esiintyy, se korvaa hapen aiheuttamalla tajun menettämisen. Kosketus vuotavaan jäähdytysaineeseen aiheuttaa palovammoja. Lisätietoja varten viittaa kiertoelimen arvokilpeen koskien käytettyä jäähdytysainetta ja valmistajan päivitettyihin käyttöturvallisuustietoihin (US Safety Data Sheet - SDS), jotka tunnettiin aiemmin nimellä MSDS, sekä EU:n käyttöturvallisuustietoihin.

Siirrä laitetta varovaisesti. Äkilliset täristykset tai putoamiset voivat vahingoittaa siihen kuuluvia osia. Sammuta laite ja kytke se irti jännitelähteestä ennen sen liikuttamista.

Älä koskaan käytä laitetta jos se on vahingoittunut tai siinä esiintyy vuotoja.

Älä koskaan käytä tulenarkoja tai syövyttäviä nesteitä. Käytä vain ohjekirjassa lueteltuja hyväksyttyjä nesteitä. Ennen nesteiden käyttöä tai huoltotoimenpiteiden suorittamista, joihin liittyy kosketus nesteeseen, viittaa valmistajan päivittämiin käyttöturvallisuustietoihin (US Safety Data Sheet - SDS) ja EU:n käyttöturvallisuustietoihin lisätietoja varten.

Sammuta laite ja kytke se irti jännitelähteestä aina ennen sen liikuttamista.

Jätä korjaus- ja huoltotyöt pätevän teknikon tehtäväksi.

Säilytä laitetta -25 °C - 60 °C lämpötilassa (pakkauksen kanssa), ja suhteellisen kosteuden ollessa <80 %.

Käytöstä poistaminen on suoritettava yksinomaan pätevän jälleenmyyjän toimesta sertifioituja varusteita käyttämällä. Noudata kaikkia voimassa olevia määräyksiä.

Muiden kuin tässä ohjekirjassa kuvattujen asennus-, käyttö- tai huoltotoimenpiteiden suorittaminen voi aiheuttaa vaarallisen tilanteen ja mitätöidä valmistajan myöntämän takuun.

Älä koskaan syötä linjajännitettä jäähdyttimessä oleviin yhteysliitoksiin.

Nesteen syöttölinjojen ja jäähdyttimen vajaa täyttö voi vahingoittaa jäähdyttimen pumppua. Vältä kuitenkin ylitäyttöä, sillä nesteet laajenevat kun niitä kuumennetaan.

Ennen ThermoFlexissä olevan säiliökotelon vaihtoa varmista, että säiliön tarkastusputken pyöreä pidike on kiinnitetty kunnolla paikoilleen.

Älä käytä jäähdytintä ThermoFlex900-5000:ssa ennen kuin säiliönesteen jakolaite on asennettu.

Jos jäähdytin on varustettu positiivisella tilavuuspumpulla (P1 tai P2), varmista, että sovellukseen kuuluvat putket ja kiinnikkeet kestävät vähintään 185 psi:n paineen.

Älä käytä ajoneuvoille tarkoitettuja pakkasnesteitä. Myynnissä olevat pakkasnesteet sisältävät silikaatteja, jotka vahingoittavat pumpun tiivisteitä.

Estääksesi levylämmönvaihtimen jäätymistä ThermoFlex7500-24000 -jäähdyttimet vaativat 50/50 EG/vesi tai 50/50 PG/vesi käyttöä alle 10 °C prosessilämpötilassa.

Kun EG/vesi- tai PG/vesi-nesteseosta käytetään, tarkista säännöllisin väliajoin nesteen pitoisuus ja pH-arvo. Pitoisuuden ja pH-arvon muutokset voivat vaarantaa järjestelmän suorituskykyä.

Älä käytä deioinisoivaa (DI) suodatuspatruunaa estetyn EG:n tai PG:n kanssa. DI-suodatin poistaa inhibiittorit nesteestä, tekemällä nesteestä tehottoman syöpymistä vastaan.

Biosidit ovat syövyttäviä ja voivat aiheuttaa parantumattomia silmävaurioita ja palovammoja. Ne ovat vaarallisia jos niitä hengitetään, niellään tai ne imeytyvät ihon kautta. Viittaa valmistajan päivitettyihin SDS-asiakirjoihin.

Estääksesi jäähdyttimen levylämmönvaihtimen vahingoittumista, keskipakopumput vaativat vähintään 4,0 gpm (15,1 lpm) virtausta.

Lauhduttimen suodattimen puhdistamisen/vaihdon suorittamatta jättäminen aiheuttaa jäähdytyskapasiteetin vähenemistä ja johtaa jäähdytysjärjestelmässä syntyviin ennenaikaisiin vikoihin. Perusteellista puhdistusta varten, irrota eturitiläyksikkö.

Ilmajäähdytteisissä jäähdyttimissä eturitiläyksikön takana sijaitsevat lauhduttimen siivekkeet ja kehikko ovat erittäin teräviä.

Älä koskaan käynnistä jäähdytintä kun paneelit on irrotettu, lukuun ottamatta ilmajäähdytteistä ritiläyksikköä.

Vesijäähdytteisissä ThermoFlex900-5000 -jäähdyttimissä on terävillä lavoilla varustettu tuuletin. Varmista, että jäähdytin on sammutettu ennen eturitilän irrottamista.

Käyttötarkoitus, kiertojäähdyttimet:

Thermo Scientific kiertojäähdyttimet on suunniteltu jatkuvan nesteen syöttöön vakaassa lämpötilassa ja virtausarvossa. Jäähdytin koostuu ilma- tai vesijäähdytteisestä jäähdytysjärjestelmästä, lämmönvaihtimesta, kiertopumpusta, prosessinesteen säiliöstä ja mikroprosessori-ohjaimesta.

Jäähdyttimet on suunniteltu jatkuvaan käyttöön sisätiloissa tässä ohjekirjassa määriteltyjen menettelyjen ja vaatimusten mukaisesti.

Asennus, kiertojäähdyttimet:

Aseta jäähdytin siten, että siihen kuuluvaan irtikytkentälaitteeseen päästään helposti.

Jäähdytintä on käytettävä yksinomaan sen käyttöön tarkoitetulla pistorasialla.

Varmista, että kaikki lähetyksessä käytetyt putkitulpat on irrotettu ennen sen asennusta.

Prosessinesteen liitännät sijaitsevat jäähdyttimen takaosassa ja ne on merkitty  (PROCESS OUTLET) ja  (PROCESS INLET). Liitä  sovelluksessasi olevaan nesteen sisäänmenoon. Liitä  sovelluksessasi olevaan nesteen ulostuloon.

Vesijäähdytteisissä jäähdyttimissä, liitä  (FACILITY INLET) järjestelmän vedensyöttöön. Liitä  (FACILITY OUTLET) järjestelmän paluuveteen tai viemäriin.

Ennen jäähdyttimen käynnistystä, tarkista kaikki yhteyslinjat sekä sähkö- ja vesiliitokset.

GA

Treoracha Riachtanacha Sábháilteachta Fuarthóirí Athfhillteacha

Má tá aon treoir ann nach dtuigtear, ceadaigh an lámhleabhar nó déan teagmháil linn sula dtéann tú níos faide.

Sábháilteacht, gach táirge:

DANGER léiríonn sé staid ghuaiseach as a leanfaidh bás nó tromghortú, mura seachnaítear í.

WARNING léiríonn sé staid ghuaiseach, a bhféadfadh bás nó tromghortú a bheith ina thoradh air, mura seachnaítear í.

CAUTION léiríonn sé staid ghuaiseach, as a leanfaidh mionghortú nó dochar measartha, mura seachnaítear í. Úsáidtear é, leis, chun rabhadh a thabhairt i gcás cleachtais neamhshábháilte.

ceaptha leis an úsáideoir a chur ar an eolas maidir le “voltas contúirteach” neamhinslithe laistigh d’imfhálú an fhuarthóra. Tá méid an voltais suntasach a dhóthain le bheith ina bhaol turrainge leictrí.

léiríonn sé dromchlaí te.

léiríonn sé gur chóir an lámhleabhar a léamh.

Ná húsáid an trealamh mar ghléas steiriúil ná mar ghléas a nasctar le hothar. Lena chois sin, níor ceapadh an trealamh lena úsáid i Láithreacha Guaiseacha Aicme I, II nó III mar a shainmhínítear sa Chód Náisiúnta Leictreach.

Trealamh atá ceaptha le húsáid istigh amháin. Ná suigh riamh é in áit ina bhfuil teas iomarcach, taise, aerú neamhdhóthanach nó ábhair chreimneacha. Ceadaigh an lámhleabhar go bhfeice tú na paraiméadair oibriúcháin.

Ceangail an trealamh d’asraon atá talmhaithe i gceart.

Is airde ná aer na cuisneáin a úsáidtear, agus má bhíonn sceitheadh ann, gabhfaidh siad áit na hocsaigine as a leanfaidh cailliúint comhfheasa. Dófar craiceann má bhíonn teagmháil idir craiceann agus cuisneán atá ag sceitheadh. Féach ainmphláta an dáileora go bhfeice tú an cineál cuisneáin a úsáidtear agus ansin féach Leathanach Sonraí Sábháilteachta SA is déanaí an déantóra, an rud a dtugtaí an MSDS air cheana, agus Leathanach Sonraí Sábháilteachta an AE chun breis eolais a fháil.

Bí cúramach agus tú ag bogadh an trealaimh. Is féidir le croitheadh nó ísliú tobann na comhpháirteanna a dhamáistiú. Cas an trealamh as i gcónaí agus dícheangail é den voltas soláthair sula mbogann tú é.

Ná hoibrigh riamh trealamh damáistithe nó trealamh atá ag sceitheadh.

Ná húsáid leacht inadhainte nó creimneach riamh. Ná húsáid ach na leachtanna ceadaithe atá liostaithe sa lámhleabhar. Sula n-úsáidtear aon leacht nó sula ndéantar cothabháil ina bhféadfaí teagmháil a dhéanamh leis an leacht, ceadaigh Leathanach Sonraí Sábháilteachta SA is déanaí an déantóra agus Leathanach Sonraí Sábháilteachta an AE chun breis eolais a fháil.

Cas an trealamh as i gcónaí agus dícheangail é den voltas soláthair sula mbogann tú é.

Iarr ar theicneoir cáilithe gach seirbhísiú agus deisiú a dhéanamh.

Stóráil an trealamh sa raon teochta -25°C go 60°C (in éineacht leis an bpacáistiú), agus i dtaiseacht choibhneasta <80%.

Níor chóir ach do dhéileálaí cáilithe, a úsáideann trealamh deimhnithe, an gléas a dhíchoimisiúnú. Ní mór cloí le gach rialachán atá i bhfeidhm.

Féadfaidh staid ghuaiseach agus cur ar neamhní bharánta an déantóra a bheith ina thoradh ar fheidhmiú nósanna imeachta suiteála, oibriúcháin nó cothabhála seachas iad siúd a ndéantar cur síos orthu sa lámhleabhar.

Ná húsáid voltas líne riamh le haon cheann de na naisc chumarsáide ar an bhfuarthóir.

D’fhéadfaí caidéal an fhuarthóra a dhamáistiú mura líontar an fuarthóir agus na línte leachta próisis go hiomlán. Seachain rólíonadh, fairsingíonn leachtanna tar éis iad a théamh.

Ar ThermoFlex, sula gcuirtear cásáil an taiscumair ar ais, cinntigh go bhfuil stopallóir liathróide thiúb radhairc an taiscumair daingnithe ina áit.

Ná hoibrigh an fuarthóir ThermoFlex900-5000 mura bhfuil idirleatóir leachta an taiscumair suiteáilte.

Ar ThermoChill, ná líon os cionn na bile nó sceithfidh an leacht amach as barr an umair ar chomhpháirteanna an fhuarthóra.

Má tá d’fhuarthóir trealmhaithe le caidéal dearfach díláithriúcháin (P1 nó P2), cinntigh go bhfuil línte agus feistis phluiméireachta d’fheidhmiúcháin rátáilte chun ar a laghad 185 psi a sheasamh.

Ná húsáid oibreán frithreo uathghluaisneach. Tá sileacáit in oibreán frithreo uathghluaisneach a dhamáistíonn séalaí caidéil.

Chun reo/gloiniú an mhalartóra plátaí a sheachaint, is gá, i gcás fhuarthóirí ThermoFlex7500-24000, 50/50 EG/uisce nó 50/50 PG/uisce faoi bhun 10°C de theocht próisis a úsáid.

Agus meascán leachta próisis de EG/uisce nó PG/uisce á úsáid, seiceáil tiúchan an leachta agus an pH ar bhonn rialta. Is féidir le hathruithe ar thiúchan agus ar pH difear a dhéanamh d’fheidhmíocht córais.

Ná húsáid cartús scagaire dí-ianúcháin (DI) le EG Coiscthe nó PG Coiscthe. Bainfidh scagaire DI coscairí den tuaslagán a fhágfaidh an leacht neamhéifeachtach mar chosaint ar chreimeadh. Ina theannta sin, méadaíonn coscairí seoltacht leachta.

Is oibreáin chreimneacha iad bithicídí agus is féidir leo damáiste doleigheasta a dheánamh don tsúil agus an craiceann a dhó. Déanann siad damáiste má dhéantar iad a análú, a shlogadh nó a ionsú tríd an gcraiceann. Ceadaigh an SDS is déanaí ón déantóir.

Chun damáiste do mhalartóir plátaí an fhuarthóra a chosc, teastaíonn ráta íosta sreafa 4.0 gpm (15.1 lpm) ó chaidéil lártheifeacha.

Mura ndéantar an scagaire comhdhlúthadáin a ghlanadh/a athchur, caillfear cumas fuarthóra agus d'fhéadfadh an córas fuaraithe teip roimh am. Chun glanadh iomlán a dhéanamh, bain cóimeáil na greille tosaigh.

Ar fhuarthóirí aerfhuaraithe bíonn an fhrámáil agus na heití atá suite laistigh de chóimeáil na greille tosaigh an-ghéar.

Seachas an chóimeáil ghreille aerfhuaraithe, ná hoibrigh an fuarthóir riamh agus aon cheann de na painéil bainte.

Tá lanna géara sa bhfean i bhfuarthóirí uiscefhuaraithe ThermoFlex900-5000, féach chuige go bhfuil an fuarthóir casta as sula mbaintear an ghreille thosaigh.

Úsáid Cheaptha, Fuarthóirí Athfhillteacha:

Dearadh fuarthóirí athfhillteacha Thermo Scientific le soláthar leanúnach leachta a sholáthar ag teocht agus ar ráta sreafa seasmhach. Is éard atá san fhuarthóir córas cuisniúcháin aerfhuaraithe nó uiscefhuaraithe, teasmhalartóir, caidéal athfhillteach, taiscumar leachta próisis agus rialtóir micreaphróiseálaí.

Tá fuarthóirí ceaptha le haghaidh oibriú leanúnach agus le húsáid laistigh de réir na nósanna imeachta agus na riachtanas atá luaite sa lámhleabhar a ghabhann leis.

Le Fuarthóirí Athfhillteacha a Shuiteáil:

Suigh an fuarthóir gar dá ghleas dícheangail, agus sa tslí go bhfuil fáil ar an ngléas sin go héasca.

Tá an fuarthóir ceaptha le húsáid ar asraon tiomnaithe.

Cinntigh go mbaintear gach plocóid seolta líne pluiméireachta sula ndéantar an tsuiteáil.

Tá na naisc leachta próisis suite ar chúl an fhuarthóra agus tá siad lipéadaithe  (PROCESS OUTLET (ASRAON PRÓISIS)) agus  (PROCESS INLET (IONRAON PRÓISIS)). Ceangail an  leis an ionraon leachta ar d'fheidhmiúchán. Ceangail an  leis an asraon leachta ar d'fheidhmiúchán.

I gcás fuarthóirí uiscefhuaraithe, ceangail an  (FACILITY INLET (IONRAON SAORÁIDE)) le soláthar uisce do shaoráide. Ceangail an  (FACILITY OUTLET (ASRAON SAORÁIDE)) le filleadh nó draein uisce do shaoráide.

Sula dtosaítear an fuarthóir, seiceáil faoi dhó gach cumarsáid infheidhmithe, agus gach nasc leictreach agus pluiméireachta.

HR

Osnovne sigurnosne uput
Cirkulirajući rashladni uređaji

Ako ne razumijete bilo koje od ovih uputa, pogledajte priručnik ili nas kontaktirajte prije nego što nastavite.

Sigurnost, svi proizvodi:

DANGER označava neposrednu opasnost koja će, ako se ne izbjegne, uzrokovati smrt ili tešku ozljedu.

WARNING označava moguću opasnu situaciju koja, ako se ne izbjegne, može uzrokovati smrt ili tešku ozljedu.

CAUTION označava moguću opasnu situaciju koja, ako se ne izbjegne, može uzrokovati manju ili srednje tešku ozljedu. Također se može koristiti da upozori na nesigurne radnje.

 upozorava korisnika na prisutnost neizoliranog „opasnog napona“ unutar kućišta rashladnog uređaja. Napon je dovoljno velik da predstavlja opasnost od strujnog udara.

 ukazuje na prisutnost vrućih površina.

 ukazuje da je potrebno pročitati priručnik.

Nemojte koristiti opremu kao sterilni proizvod ili proizvod povezan na pacijenta. Pored toga, oprema nije predviđena za upotrebu na opasnim lokacijama klase I, II ili II prema definicijama Nacionalnog električnog standarda (engl. National Electrical Code).

Oprema je predviđena isključivo za upotrebu u zatvorenim prostorima. Nikad je nemojte postavljati gdje je prisutna prekomjerna toplina, vlažnost, neodgovarajuće prozračivanje ili nagrizajući materijali. Radni parametri navedeni su u priručniku.

Povežite opremu na pravilno uzemljenu utičnicu.

Korištena sredstva za hlađenja teža su od zraka i, ako dođe do curenja, zamijenit će kisik te dovesti do gubitka svijesti. Kontakt sa sredstvom za hlađenje koje curi uzrokuje opekline. Pogledajte natpisnu pločicu cirkulatora za vrstu korištenog sredstva za hlađenje, a zatim potražite dodatne informacije u najnovijem sigurnosno-tehničkom listu za SAD (engl. Safety Data Sheet; SDS), ranije poznatom kao MSDS, kao i sigurnosno-tehničkom listu za EU.

Oprezno pomjerajte opremu. Naglo drmanje ili ispuštanje opreme može oštetiti njene komponente. Prije pomjeranja oprema uvijek je isključite i iskopčajte iz napona izvora napajanja.

Nikad nemojte koristiti oštećenu opremu ili opremu koja propušta.

Nikad nemojte koristiti zapaljive ili nagrizajuće tekućine. Koristite samo odobrene tekućine navedene u priručniku. Prije korištenje bilo kakve tekućine ili obavljanja postupaka održavanja u kojima će vjerojatno doći do kontakta s tekućinom, potražite dodatne informacije u najnovijem sigurnosno-tehničkom listu za SAD (engl. Safety Data Sheet; SDS) i sigurnosno-tehničkom listu za EU.

Prije pomjeranja oprema uvijek je isključite i iskopčajte iz napona izvora napajanja.

Servisiranje i popravke treba obavljati kvalificirani serviser.

Opremu držite na rasponu temperature od -25 °C do 60 °C (s pakiranjem) i relativnoj vlažnosti od <80 %.

Stavljanje izvan pogona mora obaviti isključivo kvalificirani trgovac pomoću certificirane opreme. Moraju se slijediti svi važeći propisi.

Obavljanje postupaka ugradnje, korištenja ili održavanja koji nisu opisani u priručniku može dovesti do opasne situacije i poništit će jamstvo proizvođača.

Nikad nemojte primjenjivati linijski napon na komunikacijske priključke na rashladnom uređaju.

Ako ne napunite rashladni uređaj i crijeva za radnu tekućinu do kraja, može doći do oštećenje pumpe rashladnog uređaja. Nemojte prepunjavati jer se tekućina širi prilikom zagrijavanja.

Na rashladnom uređaju ThermoFlex, prije zamjene kućišta rezervoara potrebno je osigurati da čep indikatora razine u rezervoaru bude čvrsto na mjestu.

Rashladni uređaj ThermoFlex900-5000 nemojte koristiti ako difuzor rezervoara nije ugrađen.

Ako je rashladni uređaj opremljen volumetrijskom pumpom (P1 ili P2), pazite da vodovodna crijeva i spojnice mogu podnijeti najmanje 185 psi.

Nemojte koristiti antifriz za automobile. Komercijalni antifriz sadrži silikate koji oštećuju brtve pumpe.

Kako bi se spriječilo smrzavanje pločastog izmjenjivača, rashladni uređaji ThermoFlex7500-24000 zahtijevaju upotrebu smjese od 50/50 etilen glikola/vode ili 50/50 propilen glikola/vode na radnoj temperaturi ispod 10 °C.

Prilikom upotrebe smjese radne tekućine od etilen glikola/vode ili propilen glikola/vode, redovito provjeravajte koncentraciju tekućine i pH vrijednost. Promjene u koncentraciji i pH vrijednosti mogu utjecati na performanse sustava.

Nemojte koristiti uložak filtra za deioniziranje s inhibiranim etilen glikolom ili inhibiranim propilen glikolom Filtar za deioniziranje uklanja inhibitore iz otopine, što tekućinu čini nedjelotvornom u zaštiti od korozije. Pored toga, inhibitori povećavaju provodljivost tekućine. Softver polarnog rashladnog uređaja mora se prilagoditi kako bi odgovarao korištenoj radnoj tekućini.

Biocidi su nagrizajući i mogu uzrokovati nepopravljiva oštećenja očiju i opekline. Štetni su ako se udahnu, progutaju ili upiju kroz kožu. Pogledajte najnoviji sigurnosno-tehnički list proizvođača.

Kako bi se spriječilo oštećenje pločastog izmjenjivača rashladnog uređaja, centrifugalne pumpe zahtijevaju minimalni protok od 4,0 g/min (15,1 l/min).

Ako se filtar kondenzatora ne čisti/mijenja, dolazi do gubitka kapaciteta hlađenja i prijevremenog kvara sustava hlađenja. Za temeljito čišćenje uklonite sklop prednje rešetke.

Na zrakom hlađenim rashladnim uređajima okvir i vertikalni stabilizatori kondenzatora nalaze se iza sklopa prednje rešetke i veoma su oštri.Izuzev zračno hlađenog sklopa rešetke nikad nemojte koristiti rashladni uređaj kad je bilo koja ploča skinuta.

Vodom hlađeni rashladni uređaji ThermoFlex900-5000 imaju ventilator s oštrim lopaticama te stoga rashladni uređaj morate isključiti prije skidanja prednje rešetke.

Predviđena namjena, cirkulirajući rashladni uređaji:

Cirkulirajući rashladni uređaji tvrtke Thermo Scientific predviđeni su za pružanje kontinuirane isporuke tekućine uz konstantnu temperaturu i protok. Rashladni uređaj se sastoji od zrakom hlađenog ili vodom hlađenog rashladnog sustava, izmjenjivača topline, cirkulirajuće pumpe, rezervoara radne tekućine i kontrolera mikroprocesora.

Rashladni uređaji su predviđeni za kontinuirani rad i primjenu u zatvorenim prostorima u skladu sa svim postupcima i zahtjevima navedenim u njihovim priručnicima.

Ugradnja, cirkulirajući rashladni uređaji:

Postavite rashladni uređaj tako da je blizu i ima jednostavan pristup svom uređaju za iskopčavanje.

Rashladni uređaj je predviđen za upotrebu na namjenskoj utičnici.

Obavezno skinite sve ambalažne čepove vodovodnih crijeva prije ugradnje.

Priključci rashladne tekućine nalaze se sa stražnje strane rashladnog uređaja i označeni su sa  (PROCESS OUTLET) (radni izlazni otvor) i (PROCESS INLET) (radni ulazni otvor). Povežite  na ulazni otvor za tekućinu na vašem uređaju. Povežite na izlazni otvor za tekućinu na vašem uređaju.

Kod vodom hlađenih rashladnih uređaja povežite  (FACILITY INLET) (ulazni otvor za postrojenje) na vodovod postrojenja. Povežite  (FACILITY OUTLET) (izlazni otvor za postrojenje) na povratni vod ili odvod postrojenja.

Prije pokretanja rashladnog uređaja dvaput provjerite sve relevantne komunikacijske, električne i vodovodne priključke.

HU

Alapvető biztonsági utasítások
Recirkulációs hűtők

Ha valamelyik utasítást nem érti, lapozza fel a kézikönyvet, vagy forduljon hozzánk, mielőtt folytatná a munkát.

Biztonság – összes termék:

DANGER Közvetlen veszélyhelyzetet jelez, amely halált vagy súlyos sérülést okoz, ha meg nem előzik.

WARNING Potenciálisan veszélyes helyzetet jelez, amely halált vagy súlyos sérülést okoz, ha meg nem előzik.

CAUTION Potenciálisan veszélyes helyzetet jelez, amely enyhe, vagy közepes sérülést okozhat, ha meg nem előzik. A nem biztonságos eljárásokra is ez a jelzés figyelmeztet.

Veszélyes mértékű, nem szigetelt feszültség jelenlétére figyelmezteti a felhasználót a hűtő házában. A feszültség nagysága elég jelentős ahhoz, hogy áramütés veszélyét jelentse.

Forró felületek okozta veszélyre figyelmeztet.

Azt jelzi, hogy el kell olvasni a használati utasítást.

Ne használja a berendezést steril vagy beteghez csatlakoztatott eszközként. Továbbá a berendezés nem használható a National Electrical Code szabvány által definiált I., II. vagy III. osztályú veszélyes helyen.

A berendezés csak beltérben használható. Ne helyezze a hűtőt olyan helyre, amelyet erős hő, nedvesség, elégtelen szellőzés vagy korrozív anyagok jelenléte jellemez. Az üzemi paraméterek megtalálhatók a kézikönyvben.

Csatlakoztassa a berendezést egy megfelelően földelt csatlakozóaljzathoz.

Az alkalmazott hűtőközegek nehezebbek a levegőnél, ezért szivárgás esetén kiszorítják az oxigént, ami eszméletvesztést okoz. A szivárgó hűtőközeg a bőrrel érintkezve fagyást okoz. A hűtőközeg típusa fel van tüntetve a berendezés adattábláján, további információkat pedig a gyártó legfrissebb amerikai biztonsági adatlapján (SDS, korábbi nevén MSDS) vagy európai biztonsági adatlapján találhat.

A berendezés mozgatásakor legyen óvatos. A zökkenések vagy leejtés kárt tehet a berendezés komponenseiben. Mozgatás előtt mindig kapcsolja ki és válassza le az áramforrásról a berendezést.

Ne üzemeltesse a berendezést, ha az sérült vagy szivárog.

Ne használjon gyúlékony vagy korrozív folyadékokat. Csak a kézikönyvben szereplő, jóváhagyott folyadékot használjon. Mielőtt bármilyen folyadékot használna, illetve olyan karbantartást végezne, amely várhatóan folyadékkal való érintkezéssel jár, ismerkedjen meg a gyártó legfrissebb amerikai biztonsági adatlapján (SDS) vagy európai biztonsági adatlapján szereplő információkkal.

Mozgatás előtt mindig kapcsolja ki és válassza le az áramforrásról a berendezést.

A szervizelést és a javítást bízza képzett szakemberre.

A berendezést -25 és 60 °C közötti hőmérséklet (csomagolással) és 80% alatti relatív páratartalom mellett kell tárolni.

Az üzemen kívül helyezést csak szakkereskedő hajthatja végre, minősített berendezés használatával. Minden érvényben lévő előírást be kell tartani.

A telepítési, üzemeltetési, illetve karbantartási eljárásoknak a kézikönyvben foglalttól eltérő végrehajtása veszélyes helyzetet teremthet, és érvénytelenné teszi a gyártó garanciáját.

Soha ne vezessen hálózati feszültséget a hűtő kommunikációs csatlakozóiba.

Ha a hűtő és az üzemifolyadék-vezetékek nincsenek teljesen feltöltve, akkor kár keletkezhet a berendezés szivattyújában. Tartózkodjon a túltöltéstől, melegítéskor a folyadékok tágulnak.

ThermoFlex esetében a tartály házának cseréje előtt gondoskodjon arról, hogy a tartály vizsgálócsövének golyós elzárója stabilan a helyén legyen.

ThermoFlex900–5000 esetében ne üzemeltesse a hűtőt, amíg nincs felszerelve a tartály folyadékporlasztója.

Ha a hűtő térfogat-kiszorításos szivattyúval (P1 vagy P2) rendelkezik, akkor a rendszer csővezetékeinek és -szerelvényeinek el kell viselnie legalább 12,8 bar (185 psi) nyomást.

Ne használjon autóipari fagyállót. A kereskedelemben kapható fagyállókban található szilikátok kárt tesznek a szivattyú tömítéseiben.

A lemezes hőcserélő fagyásának/jegesedésének megelőzése érdekében a ThermoFlex7500–24000 hűtők 50/50 EG/víz, illetve 10 °C üzemi hőmérséklet alatt 50/50 PG/víz használatát igénylik.

EG/víz vagy PG/víz üzemifolyadék-keverék használata esetén rendszeres időközönként ellenőrizni kell a folyadék koncentrációját és pH-értékét. A koncentráció és a pH-érték változása befolyásolhatja a rendszer teljesítményét.Inhibitoros EG vagy inhibitoros PG esetén ne használjon deionizáló (DI) szűrőbetétet.

A DI-szűrő eltávolítja az oldatból az inhibitorokat, így a folyadék hatástalan lesz a korrózióvédelem szempontjából. Az inhibitorok emellett növelik a folyadék vezetőképességét.

A biocidok és a korrozív anyagok visszafordíthatatlan szemkárosodást és a bőr égési sérülését okozhatják. Belélegezve, lenyelve és a bőrön át felszívódva is ártalmasak. További információkat a gyártó legfrissebb biztonsági adatlapja tartalmaz.

A hűtő lemezes hőcserélője sérülésének megelőzése érdekében a centrifugálszivattyúknak 15,1 l/perc (4,0 gallon/perc) minimális térfogatárammal kell működniük.

A kondenzátorszűrő tisztításának/cseréjének elmulasztása a hűtési kapacitás csökkenéséhez és a hűtőrendszer idő előtti meghibásodásához vezet.

A gondos tisztítás érdekében távolítsa el az elülső rácsszerelvényt. Léghűtéses hűtők esetében az elülső rácsszerelvény mögött található kondenzátor váza és bordázata nagyon éles.

A léghűtéses rácsszerelvénytől eltekintve soha ne üzemeltesse a hűtőt eltávolított panellel.

A vízhűtéses ThermoFlex900–5000 hűtőkben éles lapátokkal rendelkező ventilátor található. Az elülső rács eltávolítása előtt győződjön meg arról, hogy a hűtő ki van kapcsolva.

Rendeltetésszerű használat, recirkulációs hűtők:

A Thermo Scientific recirkulációs hűtői folyamatos, állandó hőmérsékletű és térfogatáramú folyadékellátás biztosítására szolgálnak. A hűtőt egy lég- vagy vízhűtéses hűtőrendszer, egy hőcserélő, egy újrakeringető szivattyú, egy üzemifolyadék-tartály és egy mikroprocesszoros vezérlő alkotja.

A hűtők folyamatos beltéri üzemeltetésre szolgálnak a kézikönyvükben foglalt valamennyi eljárás és követelmény szem előtt tartásával.

Telepítés, recirkulációs hűtők:

Úgy helyezze el a hűtőt, hogy a megszakítója a közelében, könnyen hozzáférhető helyen legyen.

A berendezést kifejezetten erre a célra szolgáló aljzathoz kell csatlakoztatni.

Telepítés előtt távolítsa el valamennyi csővezeték szállítódugóit.

Az üzemi folyadék csatlakozásai a hűtő hátulján találhatók (PROCESS OUTLET – üzemi kimenet) és (PROCESS INLET – üzemi bemenet) címkével. A csatlakozóhoz csatlakoztassa a rendszer folyadékmenetét, a csatlakozóhoz pedig a folyadékkimenetét.

Vízhűtéses hűtő esetén csatlakoztassa a létesítmény vízellátását a (FACILITY INLET – létesítménybemenet) csatlakozáshoz. A (FACILITY OUTLET – létesítménykimenet) csatlakozást csatlakoztassa a létesítmény vízvisszavezető rendszeréhez vagy a lefolyóhoz.

A hűtő elindítása előtt újból ellenőrizze az összes szükséges kommunikációs, elektromos és csővezeték-csatlakozást.

LT

Pagrindinės saugos instrukcijos
Recirkuliuojantys aušintuvai

Jei kurios nors iš šių instrukcijų yra nesuprantamos, prieš tęsdami skaitykite vadovą arba kreipkitės į mus.

Sauga, visi gaminiai:

⚠ DANGER nurodo neišvengiamai pavojingą situaciją, kurios neišvengus, galima mirties arba rimto sužalojimo baigtis.

⚠ WARNING nurodo galimai pavojingą situaciją, kurios neišvengus, galima mirties arba rimto sužalojimo baigtis.

⚠ CAUTION nurodo galimai pavojingą situaciją, kurios neišvengus, kyla nerimto arba vidutiniško sužalojimo tikimybė. Taip pat galima pranešti, kai yra naudojama nesaugiai.

 skirta pranešti naudotojui, kai prie aušintuvo yra neizoliuota „pavojinga įtampa“. Įtampos dydis yra gana svarbus ir gali sukelti elektros šoko pavojų.

 nurodo esamus karštus paviršius.

 nurodo skaityti vadovą.

Nenaudokite įrangos kaip sterilaus ar prie paciento prijungto prietaiso. Be to, įranga nėra skirtas naudoti I, II ir III klasės pavojingose vietose, kaip nurodyta Nacionaliniame elektros kodekse.

Įranga yra sukurta tik naudoti viduje. Niekada nedėkite jo vietoje, kur yra per didelis karštis, drėgmė, netinkamas vėdinimas arba korozinių medžiagos. Darbinių parametrų ieškokite vadove.

Prijunkite įrangą prie tinkamai įžeminto išvado.

Naudojami aušalai yra sunkesni nei oras ir, esant nutekėjimui, jie išstums deguonį, dėl ko galima prarasti sąmonę. Prisilietus prie ištekėjusių aušalų, galima nudegti odą. Naudojamo aušalo tipo ir gamintojo naujausios JAV saugumo duomenų išklotinės (SDS), anksčiau žinomos kaip MSDS bei ES saugumo duomenų išklotinės papildomos informacijos ieškokite cirkuliatoriaus techninių duomenų lentelės.

Įrangą perkelkite atsargiai. Staigūs krestelėjimai arba kritimai gali pažeisti jos komponentus. Prieš perkeldami visuomet išjunkite įrangą ir atjunkite juo maitinimo įtampos.

Niekada nenaudokite pažeistos ar tekančios įrangos.

Niekada nenaudokite degių ar korozinių skysčių. Naudokite tik vadove išvardintus patvirtintus skysčius.

Prieš pradėdami naudoti bet kokius skysčius ar atlikdami priežiūrą, kurios metu gali pasitaikyti kontaktų su skysčiu, papildomos informacijos ieškokite gamintojo naujausioje JAV saugumo informacijos išklotinėje (SDS) ir ES saugumo informacijos išklotinėje.

Prieš perkeldami visuomet išjunkite įrangą ir atjunkite juo maitinimo įtampos.

Aptarnavimo ir remonto kreipkitės į kvalifikuotą techniką.

Laikykite įrangą temperatūros intervale nuo -25 °C iki 60 °C (su įpakavimu) ir <80 % santykinėje drėgmėje.

Eksploatacijos nutraukimą turi atlikti tik kvalifikuotas pardavėjas, naudojantis sertifikuotą įrangą. Reikia laikytis visų galiojančių nuostatų.

Kitokių įrengimo, naudojimo ir priežiūros procedūrų nei nurodyta vadove gali sukelti pavojingą situaciją ir anuliuos gamintojo garantiją.

Niekada nejunkite linijos įtampos prie bet kurių komunikacinių jungčių aušintuve.

Ne visiškai užpildžius aušintuvą darbinių skysčių linijos gali sugadinti aušintuvo siurblį. Venkite perpildymo, įšilę skysčiai plečiasi.

„ThermoFlex“ sistemoje prieš pakeisdami rezervuaro korpusą, įsitikinkite, kad rezervuaro matomumo vamzdelio rutulinis kamštelis yra saugiai įstatytas.

„ThermoFlex900-5000“ sistemoje nenaudokite aušintuvo jei nėra įrengtas rezervuaro skysčio skirstytuvo.

Jei jūsų aušintuve yra stūmoklinis siurblys (P1 arba P2), užtikrinkite, kad jūsų pritaikytas kanalizacijos vamzdynas ir jungtys yra nominuoti atlaikyti mažiausiai 185 psi („ThermoChill“ – 115 psi, „Merlin“ – 110 psi).

Nenaudokite automobilinio antifrizo. Komerciniuose antifrizuose yra silikatų, kurie pažeidžia siurblio sandarumą.

Kad plokščių keitiklis neužšaltų / nepasidengtų ledu, „ThermoFlex7500-24000“ aušintuvams reikia naudoti 50/50 EG / vanduo arba 50/50 PG / vanduo 10°C žemiau darbinės temperatūros.

Naudodami darbinio skysčio EG / vandens arba PG / vandens mišinį, reguliariai tikrinkite skysčio koncentraciją ir pH. Koncentracijos ir pH pakitimai gali turėti įtakos sistemos veikimui.Nenaudokite Dejonizacijos (DJ) filtro dėžutės su EG inhibitoriumi arba PG inhibitoriumi.

DJ filtras pašalins inhibitorius iš mišinio ir padarys skysčio apsaugą nuo korozijos neefektyvią. Inhibitoriai taip pat didina specifinį skysčio laidumą.

Biocidai sukelia koroziją ir gali nepagydomai pažeisti akis ar nudeginti odą. Jie yra kenksmingi įkvėpus, nurijus ar įsisavinus per odą. Naujausios SDS kreipkitės į gamintoją.

Kad aušintuvo plokščių keitiklis nebūtų sugadintas, išcentriniams siurbliams reikia 4,0 gpm (15,1 lpm) mažiausio tekėjimo srauto.

Neišvalius / nepakeitus kondensatoriaus filtro gali sumažėti aušinimo apimtys ir tai gali baigtis pirmalaikiu vėsinimo sistemos gedimu. Visiškam išvalymui išimkite priekinių grotelių sąranką.

Oru vėsinamuose aušintuvuose kondensatoriaus rėmas ir mentės, esantys už priekinių grotelių sąrankos, yra labai aštrūs.

Kitokiose nei oru vėsinamų aušintuvų grotelių sąrankose, niekada nenaudokite aušintuvo su nuimtu skydeliu.

„ThermoFlex900-5000“ vandeniu vėsinami aušintuvai turi ventiliatorius su aštriomis mentėmis, prieš nuimdami groteles, įsitikinkite, kad aušintuvas yra išjungtas.

Numatytas naudojimas, Recirkuliuojantys aušintuvai:

„Thermo Scientific“ recirkuliuojantys aušintuvai yra sukurti tiekti nuolatinį kiekį tos pačios temperatūros ir tekėjimo srauto skysčio. Aušintuvą sudaro oru arba vandeniu vėsinama šaldymo sistema, šilumokaitis, recirkuliavimo siurblys, darbinio skysčio rezervuaras ir mikroprocesorinis valdiklis.

Aušintuvai yra sukurti nepertraukiamam veikimui ir tik naudojimui viduje pagal visas procedūras ir reikalavimus, išdėstytus šiame vadove.

Įrengimas, Recirkuliuojantys aušintuvai:

Pastatykite aušintuvą, kad jis būtų arti ir lengvai pasiekiamo atjungimo prietaiso.

Aušintuvas yra skirtas naudoti su atskiru išvadu.

Prieš įrengimą, užtikrinkite, kad visi kanalizacijos vamzdyno transportavimo kamščiai yra išimti.

Darbinio skysčio jungtys yra aušintuvo užpakalyje ir yra pažymėtos 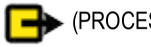 (PROCESS OUTLET) (DARBINIS IŠVADAS) ir 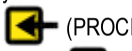 (PROCESS INLET) (DARBINIS ĮVADAS). Prijunkite  prie skysčio įvado jūsų pritaikyme. Prijunkite  prie skysčio išvado jūsų pritaikyme.

Vandeniu vėsinamiems aušintuvams prijunkite  (FACILITY INLET) (KOMPLEKSO ĮVADAS) prie jūsų komplekso vandens tiekimo. Prijunkite  (FACILITY OUTLET) (KOMPLEKSO IŠVADAS) prie jūsų komplekso vandens grąžinimo arba drenažo.

Prieš paleisdami aušintuvą dar kartą patikrinkite visas galimas komunikacines, elektros ir kanalizacijos jungtis.

LV

Būtiskas drošības instrukcijas
Recirkulācijas dzesētāji

Ja kāda no šīm instrukcijām nav saprotama, pirms turpināt darbu, skatiet rokasgrāmatu vai sazinieties ar mums.

Drošības apzīmējumi (attiecas uz visiem izstrādājumiem)

⚠ DANGER Norāda uz nopietnu apdraudējumu, kas var izraisīt nāvi vai nopietnas traumas, ja netiek novērsts.

⚠ WARNING Norāda uz potenciāli bīstamu situāciju, kas var izraisīt nāvi vai nopietnas traumas, ja netiek novērsta.

⚠ CAUTION Norāda uz potenciāli bīstamu situāciju, kas var izraisīt vieglas vai mērenas traumas, ja netiek novērsta. Šis apzīmējums arī tiek izmantots, lai brīdinātu par nedrošu rīcību.

Brīdina lietotāju par neizolēta bīstama sprieguma klātbūtni dzesētāja korpusā. Spriegums ir pietiekami augsts, lai radītu elektrotrieciena gūšanas risku.

Norāda uz karstu virsmu klātbūtni.

Norādījums lasīt rokasgrāmatu.

Neizmantojiet aprīkojumu kā sterilu vai ar pacientu saistītu ierīci. Turklāt aprīkojums nav paredzēts lietošanai I, II vai III klases bīstamās zonās atbilstoši ASV Nacionālās elektrotehnikas standartu sistēmas prasībām.

Aprīkojums ir paredzēts lietošanai tikai slēgtās telpās. To nekādā gadījumā nedrīkst novietot vietā, kur pastāv pārmērīga karstuma, mitruma vai korozīvu vielu klātbūtne, vai arī nav piemērota ventilācija. Ekspluatācijas parametrus skatiet rokasgrāmatā.

Pieslēdziet aprīkojumu atbilstoši sazemētai kontaktligzdai.

Izmantotie aukstumaģenti ir smagāki par gaisu un noplūdes gadījumā izspiedīs skābekli, izraisot samaņas zudumu. Nonākot saskarē ar noplūdušu aukstumaģentu, rodas ādas apdegumi. Izmantojamā aukstumaģenta veidu skatiet uz cirkulatora nominālvērtību plāksnītes, savukārt papildinformāciju skatiet jaunākajā ražotāja nodrošinātajā ASV drošības datu lapā (SDS) (kādreizējā MSDS), kā arī ES drošības datu lapā.

Pārvietojot aprīkojumu, ievērojiet piesardzību. Pēkšņi satricinājumi vai krišana var sabojāt tā sastāvdaļas. Pirms aprīkojuma pārvietošanas vienmēr to izslēdziet un atvienojiet no elektroapgādes tīkla.

Nekādā gadījumā nedarbiniet aprīkojumu, ja tas ir bojāts vai tam ir sūce.

Nekādā gadījumā nelietojiet viegli uzliesmojošus vai korozīvus šķidrumus. Izmantojiet tikai apstiprinātos šķidrumus, kas norādīti rokasgrāmatā. Pirms jebkāda šķidruma lietošanas vai tādu apkopes darbu veikšanas, kuru laikā iespējams nonākt saskarē ar šķidrumu, skatiet papildinformāciju jaunākajās ražotāja nodrošinātajās ASV drošības datu lapās (SDS) un ES drošības datu lapās.

Pirms aprīkojuma pārvietošanas vienmēr to izslēdziet un atvienojiet no elektroapgādes tīkla.

Apkalpošanu un remontu drīkst veikt tikai atbilstoši kvalificēti tehniskie speciālisti.

Aprīkojums jāuzglabā temperatūras diapazonā no -25 °C līdz 60 °C (ar iepakojumu) un pie <80% relatīvā mitruma.

Izņemšanu no ekspluatācijas drīkst veikt tikai attiecīgi kvalificēts izplatītājs, izmantojot sertificētu aprīkojumu. Ir jāievēro visu piemērojamo likumdošanas aktu prasības.

Ja tiek veiktas uzstādīšanas, ekspluatācijas vai apkopes procedūras, kas atšķiras no šajā rokasgrāmatā aprakstītajām, var rasties bīstamas situācijas, un tiek anulēta ražotāja garantija.

Nekādā gadījumā nepievienojiet līnijas spriegumu jebkādiem dzesētāja sakaru savienojumiem.

Ja dzesētājs un tehniskā šķidruma līnijas nav pilnībā uzpildītas, var rasties dzesētāja sūkņa bojājumi. Ir jāizvairās no pārmērīgas uzpildes, jo šķidrumi karstuma ietekmē izplešas.

Pirms ThermoFlex rezervuāra korpusa nomaiņas nodrošiniet, lai rezervuāra līmeņa indikatora lodītes aizturis būtu droši nostiprināts vietā.

Ierīcēm ThermoFlex900-5000 nedarbiniet dzesētāju, kamēr nav uzstādīts rezervuāra šķidruma difuzors.

Ja dzesētājs ir aprīkots ar virzuļsūkni (P1 vai P2), nodrošiniet, lai ierīces caurules un savienojumi varētu izturēt vismaz 185 psi.

Nedrīkst lietot automobiļiem paredzētu antifrīzu. Komerciāli pieejamais antifrīzs satur silikātus, kas bojā sūkņa blīvējumus.

Lai novērstu siltummaiņa plākšņu sasalšanu/apledošanu, ThermoFlex7500-24000 dzesētājiem nepieciešams lietot 50/50 EG/ūdens vai 50/50 PG/ūdens darba temperatūrai zem 10 °C.

Ja tehniskais šķidrums ir EG/ūdens vai PG/ūdens maisījums, regulāri pārbaudiet šķidruma koncentrāciju un pH līmeni. Koncentrācijas un pH līmeņa izmaiņas var ietekmēt sistēmas veiktspēju.

Nelietojiet dejonizācijas (DI) filtra kasetni ar inhibētu EG vai inhibētu PG. DI filtrs atdalīs inhibitorus no šķīduma, padarot šķidrumu neefektīvu aizsardzībai pret koroziju. Inhibitori arī palielina šķidruma vadītspēju.

Biocīdi ir korozīvi un var izraisīt neatgriezeniskus acu bojājumus un ādas apdegumus. To iedarbība ir kaitīga, ja tie tiek ieelpoti, norīti vai absorbēti caur ādu. Skatiet jaunākās ražotāja nodrošinātās SDS.

Lai novērstu dzesētāja siltummaiņa plākšņu bojājumu rašanos, centrifūgas sūkņiem nepieciešamais minimālais caurplūdums ir 4,0 gpm (15,1 lpm).

Ja kondensatora filtrs netiek tīrīts/nomainīts, tiek izraisīts dzesēšanas kapacitātes zudums un priekšlaicīga dzesēšanas sistēmas atteice. Lai veiktu rūpīgu tīrīšanu, noņemiet priekšējo režģi.

Dzesētājiem ar gaisa dzesēšanu kondensatora rāmis un ribas, kas atrodas aiz priekšējā režģa, ir ļoti asas.

Izņemot ierīces ar gaisa dzesēšanas režģi, nekādā gadījumā nedarbiniet dzesētāju, ja ir noņemts kāds panelis.

ThermoFlex900-5000 dzesētājiem ar ūdens dzesēšanu ir ventilators ar asām lāpstiņām, tādēļ pirms priekšējā režģa noņemšanas nodrošiniet, lai dzesētājs būtu izslēgts.

Recirkulācijas dzesētāju paredzētais lietojums

Thermo Scientific recirkulācijas dzesētāji ir paredzēti, lai nodrošinātu pastāvīgu šķidruma padevi ar konstantu temperatūru un plūsmas ātrumu. Dzesētājs sastāv no dzesēšanas sistēmas ar gaisa vai ūdens dzesēšanu, siltummaiņa, recirkulācijas sūkņa, tehnsikā šķidruma rezervuāra un mikroprocesoru kontrollera.

Dzesētāji ir paredzēti pastāvīgai darbināšanai slēgtās telpās atbilstoši visām procedūrām un prasībām, kas norādītas šajā rokasgrāmatā.

Recirkulācijas dzesētāju uzstādīšana

Novietojiet dzesētāju, lai tas atrastos atvienošanas ierīces tuvumā un tā būtu viegli pieejama.

Dzesētājs ir paredzēts pievienošanai pie atsevišķas kontaktligzdas.

Nodrošiniet, lai pirms uzstādīšanas būtu noņemti visi transportēšanai paredzētie cauruļu aizgriežņi.

Tehniskā šķidruma savienojumi atrodas dzesētāja aizmugurē un ir apzīmēti kā  (PROCESS OUTLET) (DARBA ŠĶIDRUMA IZPLŪDE) un 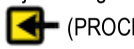 (PROCESS INLET) (DARBA ŠĶIDRUMA IEPLŪDE). Pievienojiet  ierīces šķidruma ieplūdes vietai. Pievienojiet 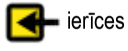 ierīces šķidruma izplūdes vietai.

Dzesētājiem ar ūdens dzesēšanu pievienojiet  (FACILITY INLET) (ŪDENS PADEVE) izmantojamā ūdens padevei. Dzesētājiem ar ūdens dzesēšanu pievienojiet (FACILITY OUTLET) (ŪDENS IZPLŪDE) izmantojamā ūdens atplūdei vai izvadei.

Pirms dzesētāja iedarbināšanas vēlreiz pārbaudiet visus sakaru, elektriskos un cauruļu savienojumus.

MT

Istruzzjonijiet Essenzjali tas-Sigurtà Recirculating Chillers

Jekk xi waħda minn dawn l-istruzzjonijiet ma tinftihemx, irreferi għall-manwal jew ikkuntattjana qabel ma tipproċedi.

Sigurtà: il-prodotti kollha:

⚠ DANGER jindika sitwazzjoni perikoluża b'mod imminenti, li jekk ma tiġix evitata, se tirriżulta f'mewt jew f'korriment serju.

⚠ WARNING jindika sitwazzjoni potenzjalment perikoluża, li jekk ma tiġix evitata, tista' tirriżulta f'mewt jew f'korriment serju.

⚠ CAUTION jindika sitwazzjoni potenzjalment perikoluża, li jekk ma tiġix evitata, tista' tirriżulta f'korriment żgħir jew moderat. Jista' jintuża wkoll biex iwissi kontra prattiċi li mhumiex siguri.

intenzjonat biex iwissi lill-utent dwar il-preżenza ta' "vultaġġ perikoluż" mhux insulat fl-enclosure taċ-chiller. Il-qawwa tal-vultaġġ hi sinifikanti biżżejjed biex tikkostitwixxi riskju ta' xokk elettriku.

jindika l-preżenza ta' wċuh jaħarqu.

jindika biex dak li jkun jaqra l-manwal.

Tużax it-tagħmir bħala tagħmir sterili jew tagħmir li jiġi kkonnettjat mal-pazjent. Barra minn hekk, it-tagħmir mhuwiex maħsub għall-użu f'Postijiet Perikolużi ta' Klassi I, II jew III kif definit min-National Electrical Code.

Dan it-tagħmir hu maħsub biex jintuża fuq ġewwa biss. Qatt tpoġġih f'post fejn ikun hemm sħana eċċessiva, umdità, ventilazzjoni inadegwata, jew materjali korużivi. Irreferi għall-manwal għall-parametri tal-operat.

Ikkonnettja t-tagħmir ma' outlet li jkun ertjat kif suppost.

Ir-refrigerants użati huma itqal mill-arja u, jekk ikun hemm tnixxija, se jissostitwixxu l-ossiġnu u jikkawżaw li wieħed jintilef minn sensih. Kuntatt ma' refrigerant li jkun qed inixxi se jikkawża ħruq tal-ġilda. Irreferi għas-circulator nameplate għat-tip ta' refrigerant użat u mbagħad għal US Safety Data Sheet (SDS) l-aktar riċenti tal-manifattur, li qabel kienet magħrufa bħala MSDS, u l-EU Safety Data Sheet għal informazzjoni addizzjonali.

Ċaqlaq it-tagħmir b'attenzjoni. Skossi għall-għarrieda jew li twaqqa' t-tagħmir, jistgħu jagħmlu ħsara lill-komponenti tiegħu. Dejjem itfi t-tagħmir u skonnettjah minn mal-provvista tad-dawl tiegħu qabel iċċaqilqu.

Qatt m'għandek tħaddem tagħmir bil-ħsara jew tagħmir li jkun qed inixxi.

Qatt m'għandek tuża fluwidi li jistgħu jieħdu n-nar jew li huma korużivi. Uża biss il-fluwidi approvati li huma elenkati fil-manwal. Qabel tuża kwalunkwe fluwidu jew twettaq manutenzjoni fejn x'aktarx se jkun hemm kuntatt mal-fluwidu, irreferi għal US Safety Data Sheet (SDS) l-aktar riċenti tal-manifattur, u l-EU Safety Data Sheet għal informazzjoni addizzjonali.

Dejjem itfi t-tagħmir u skonnettjah minn mal-provvista tad-dawl tiegħu qabel iċċaqilqu.

Irreferi s-service u t-tiswijiet lill-technician ikkwalifikat.

Aħżen it-tagħmir f'medda ta' temperatura ta' -25°C sa 60°C (bl-ippakkjar), u umdità relattiva ta' <80%.

Id-dekommissjonar irid isir biss minn aġent ikkwalifikat bl-użu ta' tagħmir iċċertifikat. Ir-regolamenti prevalenti kollha jridu jiġu segwiti.

Il-prestazzjoni tal-proċeduri tal-installazzjoni, operat, jew manutenzjoni, ħlief dawk deskritti fil-manwal, jistgħu jirriżultaw f'sitwazzjoni perikoluża, u dan se jħassar il-garanzija tal-manifattur.

Qatt m'għandek tapplika line voltage lil xi waħda mill-konnessjonijiet tal-komunikazzjoni fuq iċ-chiller.

Li ma timliex iċ-chiller u l-process fluid lines kompletament, dan jista' jagħmel ħsara lill-pompa taċ-chiller. Evita li timla żżejjed; il-fluwidi jespandu meta jissaħħnu.

Fuq ThermoFlex, qabel tibdel ir-reservoir housing, kun żgur li r-reservoir sight tube ball stopper ikun f'postu b'mod sigur.

Fuq ThermoFlex900-5000, tħaddimx iċ-chiller ħlief jekk ir-reservoir fluid diffuser ikun installat.

Jekk iċ-chiller tiegħek ikun mgħammar b'positive displacement pump (P1 jew P2), aċċerta ruħek li l-application plumbing lines u l-fittings ikunu rated biex jifilħu minimu ta' 185 psi.

Tużax antifreeze tal-karozzi. Antifreeze kummerċjali fih silicates li jagħmlu ħsara lis-siġilli tal-pompa.

Biex tipprevjeni l-iffriżar/glazing tal-plate exchanger, ThermoFlex7500-24000 chillers jeħtieġu l-użu ta' 50/50 EG/ilma jew 50/50 PG/ilma taħt it-temperatura tal-proċess ta' 10°C.

Meta tuża taħlita ta' fluwidu tal-process ta' EG/ilma jew PG/ilma, iċċekkja l-konċentrazzjoni tal-fluwidu u l-pH fuq bażi regolari. Bidliet fil-konċentrazzjoni u l-pH jista' jkollhom impatt fuq il-prestazzjoni tas-sistema.Tużax Deionization (DI) filter cartridge b'Inhibited EG jew Inhibited PG. DI filter se jneħħi l-inibituri mis-soluzzjoni u dan jagħmel il-fluwidu mhux effettiv kontra l-protezzjoni mill-korużjoni.

Il-bijoċidi huma korużivi u jistgħu jikkawżaw ħsara irriversibbli fl-għajnejn u ħruq tal-ġilda. Dawn huma perikoluży jekk jinġibdu man-nifs, jinbelgħu jew jiġu assorbiti mill-ġilda. Irreferi għall-SDS l-aktar riċenti tal-manifattur.

Biex tipprevjeni ħsara liċ-chiller's plate exchanger, centrifugal pumps jeħtieġu rata minima ta' ċirkolazzjoni ta' 4.0 gpm (15.1 lpm).

Li ma tnaddafx/tibdilx il-condenser filter, se jikkawża telf tal-kapaċità ta' tkessiħ u jwassal għal ħsara prematura tas-sistema ta' tkessiħ. Biex tnaddaf bir-reqqa, neħħi l-front grill assembly.

Fuq air-cooled chillers, il-condenser framing u fins li jinsabu wara l-front grill assembly, jaqtgħu ħafna.

Ħlief għall-air-cooled grill assembly, qatt m'għandek tħaddem iċ-chiller bi kwalunkwe panel imneħħi.

ThermoFlex900-5000 water-cooled chillers għandhom fan bi blades jaqtgħu; aċċerta ruħek li ċ-chiller ikun mitfi qabel ma' tneħħi l-grill ta' quddiem.

Użu Intenzjonat, Recirculating Chillers:

Thermo Scientific recirculating chillers huma maħsuba biex jipprovdu provvista kontinwa ta' fluwidu b'rata kostanti ta' temperatura u fluss. Iċ-chiller jikkonsisti minn sistema ta' refriġerazzjoni mkessħa bl-arja jew mkessħa bl-ilma, recirculating pump, process fluid reservoir u microprocessor controller.

Iċ-chillers huma maħsuba biex jaħdmu l-ħin kollu u biex jintużaw fuq ġewwa, skont il-proċeduri u r-rekwiżiti kollha deskritti fil-manwali tagħhom.

Installazzjoni, Recirculating Chillers:

Poġġi ċ-chiller b'tali mod li jkun qrib, u jkun hemm aċċess faċli, għat-tagħmir ta' skonnettjar tiegħu.

Iċ-chiller hu maħsub għall-użu fuq dedicated outlet.

Kun żgur li l-plumbing line shipping plugs jitneħħew kollha qabel l-installazzjoni.

Il-konnessjonijiet tal-process fluid jinsabu fuq in-naħa ta' wara taċ-chiller u huma ttikkettati  (PROCESS OUTLET) u  (PROCESS INLET). Ikkonnettja l-  mal-fluid inlet fuq l-applikazzjoni tiegħek. Ikkonnettja l-  mal-fluid outlet fuq l-applikazzjoni tiegħek.

Għal water-cooled chillers ikkonnettja l-  (FACILITY INLET) mal-provvista tal-facility water tiegħek. Ikkonnettja l-  (FACILITY OUTLET) mal-facility water return jew drain tiegħek.

Qabel ma tistartja ċ-chiller, erġa' ċċekkja l-konnessjonijiet tal-komunikazzjoni, tal-elettriku u tal-plumbing applikabbi kollha.

PL

Ważne instrukcje dotyczące bezpieczeństwa Chłodziarki recyrkulacyjne

W przypadku niezrozumienia którychkolwiek z niniejszych instrukcji, przed przystąpieniem do dalszych prac należy zapoznać się z instrukcją obsługi lub skontaktować się z nami.

Bezpieczeństwo, wszystkie produkty:

⚠ DANGER wskazuje na sytuację bezpośredniego zagrożenia, która bez podjęcia środków zaradczych doprowadzi do śmierci lub poważnych obrażeń ciała.

⚠ WARNING wskazuje na sytuację potencjalnie niebezpieczną, która bez podjęcia środków zaradczych może doprowadzić do śmierci lub poważnych obrażeń ciała.

⚠ CAUTION wskazuje na sytuację potencjalnie niebezpieczną, która bez podjęcia środków zaradczych doprowadzi do drobnych lub umiarkowanych obrażeń ciała. Ponadto będzie wykorzystywana do zgłaszania niebezpiecznych zachowań.

 ostrzega użytkownika o niezaizolowanym "niebezpiecznym napięciu" w obrębie obudowy chłodziarki. Wartość bezwzględna napięcia jest na tyle wysoka, by nieść za sobą ryzyko porażenia prądem elektrycznym.

 ostrzega przed gorącymi powierzchniami.

 nakazuje przeczytać instrukcję obsługi.

Nie używać sprzętu, jako urządzenia sterylnego ani mającego kontakt z pacjentem. Ponadto sprzęt nie jest przeznaczony do zastosowań w obrębie Lokalizacji Niebezpiecznych, Klasy I, II lub III określonych przez Krajowe Normy Elektryczne.

Sprzęt został stworzony wyłącznie do użytku wewnątrz pomieszczeń. Nigdy nie należy go umieszczać w miejscu, gdzie wystawiony będzie na działanie zbyt wysokich temperatur, wilgoci, materiałów powodujących korozję lub w lokalizacjach o nieodpowiedniej wentylacji. Aby zapoznać się z parametrami roboczymi, patrz instrukcja obsługi.

Sprzęt podłączyć do odpowiednio uziemionego gniazdka.

Wykorzystywane czynniki chłodnicze są cięższe od powietrza, dlatego w przypadku nieszczelności zastąpią tlen, co doprowadzi do utraty przytomności. Kontakt z wyciekającym czynnikiem chłodniczym doprowadzi do poparzeń skóry. Aby uzyskać więcej informacji, patrz tabliczka znamionowa cyrkulatora, na której oznaczono typ wykorzystywanego czynnika chłodniczego, najnowsza karta charakterystyki substancji niebezpiecznej US (SDS) producenta wcześniej znana jako MSDS, a także karta charakterystyki substancji niebezpiecznej EU.

Podczas transportowania sprzętu niezbędne jest zachowanie należytej ostrożności. Nagłe wstrząsy lub upadek mogą skutkować uszkodzeniem podzespołów. Przed przystąpieniem do transportowania sprzętu należy pamiętać o jego wyłączeniu oraz odłączeniu od napięcia zasilającego.

Nigdy nie obsługiwać uszkodzonego lub nieszczelnego sprzętu.

Nigdy nie stosować płynów palnych lub powodujących korozję. Korzystać wyłącznie z zatwierdzonych płynów wymienionych w instrukcji obsługi. Przed użyciem jakiegokolwiek płynu lub przystąpieniem do jakichkolwiek prac konserwacyjnych, gdy prawdopodobny jest kontakt z płynem patrz najnowsza karta charakterystyki substancji niebezpiecznej US (SDS), a także karta charakterystyki substancji niebezpiecznej EU.

Przed przystąpieniem do transportowania sprzętu należy pamiętać o jego wyłączeniu oraz odłączeniu od napięcia zasilającego.

Prace serwisowe oraz naprawcze należy zlecić wykwalifikowanemu technikowi.

Sprzęt należy przechowywać w temperaturach -25°C do 60°C (w opakowaniu) oraz przy zachowaniu <80% wilgotności względnej.

Wycofanie z eksploatacji może zostać przeprowadzone wyłącznie przez wykwalifikowanego sprzedawcę wykorzystującego sprzęt posiadający niezbędne atesty. Niezbędne jest przestrzeganie wszystkich obowiązujących przepisów.

Wykonywanie czynności montażowych, konserwacyjnych lub obsługa odbiegająca od wytycznych opisanych w instrukcji obsługi może skutkować niebezpiecznymi sytuacjami oraz utratą gwarancji producenta.

Nigdy nie stosować napięcia międzyprzewodowego na żadnym ze złączy komunikacyjnych chłodziarki.

Jeśli chłodziarka oraz przewody rurowe medium chłodzącego nie zostaną całkowicie wypełnione może to doprowadzić do uszkodzenia pompy chłodziarki. Unikać przepełnienia. Płyny pod wpływem ciepła zwiększają swoją objętość.

W przypadku ThermoFlex przed dokonaniem wymiany obudowy zbiornika zadbać o odpowiednie zabezpieczenie kulowego ogranicznika wskaźnika poziomu zbiornika.

W przypadku urządzenia ThermoFlex900-5000, chłodziarki nie należy używać, jeśli nie został zamontowany dyfuzor płynów zbiornika.

Jeśli chłodziarka wyposażona została w pompę wyporową (P1 bądź P2) należy sprawdzić czy rury kanalizacyjne oraz łączniki są w stanie wytrzymać ciśnienie o wartości minimum 185 psi.

Nie stosować samochodowych płynów zapobiegających zamarzaniu. Komercyjne środki zapobiegające zamarzaniu zawierają krzemiany uszkadzające uszczelnienie pompy.

Aby zapobiec zamarzaniu/oblodzeniu wymiennika płytkowego w przypadku chłodziarek ThermoFlex7500-24000 niezbędne jest stosowanie mieszaniny 50/50 EG/woda lub 50/50 PG/woda przy temperaturze procesu nieprzekraczającej 10°C.

W przypadku wykorzystywania mieszaniny mediów chłodzących tj. EG/woda lub PG/woda należy regularnie sprawdzać zarówno stężenie płynu, jak i pH. Zmiany stężenia i pH mogą wpłynąć na wydajność układu.Nie należy stosować wkładu filtra dejonizacyjnego (DI) ze stabilizowanym EG lub PG. Filtr DI usunie inhibitory z roztworu przez co płyn nie będzie zapewniał ochrony przeciwkorozyjnej. Ponadto, inhibitory zwiększają przewodność płynu.

Biocydy posiadają właściwości korozyjne i mogą doprowadzić do nieodwracalnego uszkodzenia oczu bądź poparzeń skóry. Wdychanie, połknięcie lub wchłonięcie przez skórę jest szkodliwe dla zdrowia. Patrz najnowsza charakterystyka substancji niebezpiecznej producenta.

Aby zapobiec uszkodzeniu płytki wymiennika chłodziarki niezbędne jest zapewnienie na pompie przepływu wynoszącego minimum 4,0 gpm (15,1 lpm).

Zaniechanie czyszczenia/wymian filtra kondensatora doprowadzi do spadku wydajności chłodniczej oraz przedwczesnej awarii układu chłodzenia. W celu dokładnego wyczyszczenia należy zdjąć okratowanie przednie.

W przypadku chłodziarek chłodzonych powietrzem, obramowanie kondensatora oraz żeberka znajdujące się za przednim okratowaniem mają bardzo ostre krawędzie. Podczas pracy wszystkie panele powinny znajdować się na swoich miejscach.

Wyjątkiem jest okratowanie zespołów chłodzonych powietrzem.

ThermoFlex900-5000 chłodzone wodą wyposażone zostały w wentylator posiadający ostre łopaty. Przed zdjęciem przedniego okratowania upewnić się, że chłodziarka została wyłączona.

Przeznaczenie, Chłodziarki recyrkulacyjne:

Chłodziarki recyrkulacyjne Thermo Scientific zostały stworzone z myślą o ciągłym dostarczaniu płynu o stałej temperaturze i stałym tempie przepływu. Chłodziarka składa się z układu chłodzenia powietrzem lub wodą, wymiennika ciepła, pompy recyrkulacyjnej, zbiornika na płyn chłodniczy oraz sterownika mikroprocesorowego.

Chłodziarki zostały zaprojektowane do pracy ciągłej oraz do użytku w pomieszczeniach zgodnie ze wszystkimi procedurami i wymogami określonymi w ich instrukcjach obsługi.

Instalacja, Chłodziarki recyrkulacyjne:

Chłodziarkę należy umieścić w pobliżu jej urządzenia wyłączającego pamiętając o zapewnieniu do niego łatwego dostępu.

Chłodziarkę należy podłączyć do przeznaczonego dla niej gniazdka.

Zadbać o to, aby przed instalacją zdemontowane zostały wszystkie zaślepki przewodów wodociągowych założone na czas transportu.

Złącza płynu chłodniczego znajdują się w tylnej części chłodziarki i zostały odpowiednio oznaczone etykietami  (PROCESS OUTLET - wylot) oraz 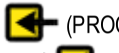 (PROCESS INLET - wlot). Podłączyć  do wlotu płynu po stronie zastosowania. Podłączyć  do wylotu płynu po stronie zastosowania.

W przypadku chłodziarek chłodzonych wodą podłączyć  (FACILITY INLET - wlot) do zasilania wodą zakładową. Podłączyć  (FACILITY OUTLET - wylot) do przewodu powrotnego wody zakładowej lub spustu.

Przed uruchomieniem chłodziarki należy ponownie sprawdzić wszystkie połączenia oraz złącza elektryczne i wodociągowe.

RO

Instrucțiuni Esențiale de Siguranță
Aparate frigorifice de recirculate

Consultați manualul sau contactați-ne înainte de a merge mai departe dacă oricare dintre aceste instrucțiuni sunt pe deplin înțelese.

Siguranță, toate produsele:

DANGER indică o situaţie periculoasă iminentă care, în cazul în care nu se evită, poate cauza moarte sau vătămare corporală gravă.

WARNING indică o situație potențial periculoasă care dacă nu se evită poate cauza moartea sau rănirea gravă.

CAUTION indică o situație potențial periculoasă care dacă nu se evită poate cauza răni minore sau moderate. Se folosește și pentru a atenționa împotriva practicilor periculoase.

 menit să atenționeze utilizatorul cu privire la prezența „voltajului periculos” neizolat din incinta aparatului frigorific. Magnitudinea voltajului este destul de mare pentru prezenta risc de șoc electric.

 indică prezenta suprafețelor încinse.

 indică citirea manualului.

Nu folosiți echipamentul ca dispozitiv steril sau dispozitiv conectat la pacient. În plus, echipamentul nu este conceput pentru a se folosi în Locuri Periculoase din Clasele I, II sau III conform definițiilor Codului Electric Național.

Echipamentul este conceput doar pentru uz intern. Nu se plasează niciodată în locuri sau unde se află niveluri crescute de căldură, umezeală sau substanțe corozive. Consultați manualul de utilizare pentru parametrii operaționali.

Conectați echipamentul la o priză împământată corespunzător.

Agenții frigorifici folosiți sunt mai grei decât aerului, iar dacă există o scurgere ei vor înlocui oxigenul și vor cauza pierderi de conștiență. Contactul cu scurgerile de agent frigorific poate cauza ardere la nivelul pielii. Consultați plăcuța de identificare a propagatorului pentru tipul de agent frigorific folosit și apoi cea mai actuală Fișă cu Date de Siguranță SUA(FDS) a producătorului cunoscută drept MSDS și Fișa cu Date de Siguranță UE pentru informații suplimentare.

Echipamentul se transportă cu grijă. Zguduielile sau căderile pot avaria componentele. Înainte de a-l transporta opriți mereu echipamentul și deconectați-l de la tensiunea de alimentare.

Nu operați niciodată echipament avariat sau care prezintă scurgeri.

Nu folosiți niciodată lichide inflamabile sau corozive. Folosiți numai lichidele aprobate care sunt enumerate în manual. Consultați cea mai actuală Fișă cu Date de Siguranță SUA (FDS) și Fișa cu Date de Siguranță UE pentru informații suplimentare înainte de folosi orice lichid sau de a efectua lucrări de întreținere când există șansa de a intra în contact cu lichide.

Înainte de a-l transporta opriți mereu echipamentul și deconectați-l de la tensiunea de alimentare.

Reparațiile și întreținerea se efectuează de către tehnicienii calificați.

Echipamentul se depozitează la temperaturi aflte între -25°C to 60°C (cu ambalaj) și <80% umiditate relativă.

Retragerea din funcționare se efectuează numai de către un furnizor calificat folosind echipament certificat. Trebuie să se respecte toate prevederile curente.

Performanța instalației, operarea sau procedurile de întreținere pe lângă cele descrise în manual pot să cauzeze situații periculoase sau se anuleze garanția producătorului.

Niciodată să nu aplicați tensiune de linie la conexiunile de comunicare ale aparatului frigorific.

Pompa aparatului frigorific ar putea fi avariată dacă apartul frigorific nu se umple complet și dacă țevile pentru lichidul de procesare sunt avariate. Evitați umplerea în exces, lichidele se dilată la căldură.

Asigurați-vă că bila de oprire de la indicatorul de nivel al rezervorului este bine fixată înainte de a pune carcasa rezervorului pentru ThermoFlex.

În cazul ThermoFLex900-5000, nu operați aparatul frigorific decât dacă difuzorul de lichid al rezervorului este instalat.

Dacă aparatul frigorific este echipat cu o pompă de refulare (P1 sau P2), asigurați-vă că liniile de instalație și garniturile sunt capabile se reziste la cel puțin 185 psi.

În cazul aparatelor de răcire Merlin cu pompe MD nu se restricționează niciodată complet curgerea pentru aplicație. Blocarea pompei avariază cuplajul și va fi necesară înlocuirea pompei.

Nu folosiți antigel pentru automobile. Antigelul comercial conține silicați care pot avaria izolația pompei.

Pentru a preveni înghețarea schimbătorului de placă, aparatele frigorifice ThermoFlex7500-24000 necesită folosirea apei50/50 EG/ sau a apei 50/50 PG/ sub 10°C-temperatură de procesare.

Când se folosește un ameste de lichid de procesare cu apă/EG sau apă/PG se verifică regulat concentrația lichidului și a pH-ului. Schimbările concentrației și a Ph-ului afectează randamentul instalației. Nu folosiți cartuș de filtrare deionizant cu EG Inhibat sau PG Inhibat.

Filtrul deionizant va îndepărta inhibitorii din soluție, iar lichidul nu va avea niciun efect de protecție împotriva coroziunii. De asemenea, inhibitorii vor mări conductivitatea lichidului.

Biocidele au efect coroziv și pot cauza răni ireversibile la nivelul ochilor și arsuri de piele. Sunt toxice dacă se inhalează, dacă se înghit sau dacă se absorb prin piele. Consultați cea mai recentă Fișă cu Date de Siguranță de la producător.

Pompele centriguale au nevoie de o rată minimă de curgere de 4.0 gpm (15.1 lpm) pentru a preveni avarierea schimbătorului de placă al aparatului frigorific.

Dacă nu se curăță/înlocuiește filtrul de condensare se poate ajunge la scăderea capacității de răcire și la erori premature ale sistemului de răcire. Pentru a efectua curățarea în profunzime se îndepărtează ansamblul frontal de grilaj.

La aparatele frigorifice răcite cu aer, cadrul și muchiile de condens din spatele grilajului frontal sunt foarte ascuțite.

Nu operați aparatul frigorific dacă panourile sunt îndepărtate în afară de ansamblul de grijale pentru răcire cu aer.

Aparatele frigorifice ThermoFlex900-5000 răcite cu apă au un ventilator cu lame ascuțite. Asigurați-vă că aparatul frigorific este scos din funcțiune înainte să îndepărtați grilajul.

Scop de utilizare, Aparate frigorifice cu Recirculare:

Aparatele frigorifice Thermo Scientific sunt concepute pentru a asigura alimentarea continuă cu lichid la temperatură și rată de curgere constantă. Aparatul frigorific este alcătuit din sistem frigorific răcit cu aer sau cu apă, un schimbător de căldură, pompă de recirculare, rezervor pentru lichid de procesare și un controler cu microprocesor.

Aparatele frigorifice sunt concepute pentru operare continuă și pentru uz intern conform tuturor procedurilor și condițiilor prevăzute în manualul lor.

Instalare, Aparat frigorific cu recirculare:

Plasați aparatul frigorific în așa fel încât să fie aproape și să aibă acces ușor la aparatul de deconectare.

Aparatul frigorific este conceput pentru a se folosi la o priză dedicată.

Asigurați-vă că toate toate mufele de transport de la linia de instalație s-au îndepărtat înainte de instalare.

Conexiunile pentru lichid de procesare se găsesc pe latura din spate a aparatului de răcire și sunt etichetate  (PROCESS OUTLET) (EVACUARE PROCES) și  (PROCESS INLET) (ADMISIE PROCES). Conectați  la admisia de lichid de la aplicația dumneavoastră. Conectați  la evacuarea de lichid de la aplicația dumneavoastră.

Pentru aparatele frigorifice răcite cu apă se conectează  (ADMISIE INSTALAȚIE) la instalația de alimentare cu apă. Conectați  (FACILITY INLET) (EVACUARE INSTALAȚIE) la instalația de întoarcere sau scurgere pentru apă.

Înainte să porniți aparatul frigorific verificați de două ori comunicarea aplicabilă, conexiunile electrice și conexiunile de la instalație.

SL

Osnovna varnostna navodila
Recirkulacijski ohlajevalniki

Če ne razumete kateregakoli navodila, si poglejte navodila za uporabo ali stopite v stik z nami, še preden nadaljujete.

Varnost - vsi izdelki:

⚠ DANGER Opozarja na akutne nevarne okoliščine, ki lahko – če se jim ne izognete – povzročijo resne ali celo smrtno nevarne poškodbe.

⚠ WARNING Opozarja na morebitno nevarne okoliščine, ki lahko – če se jim ne izognete – povzročijo resne ali celo smrtno nevarne poškodbe.

⚠ CAUTION Opozarja na akutne nevarne okoliščine, ki lahko – če se jim ne izognete – povzročijo lažje ali srednje nevarne poškodbe. Uporablja se tudi kot opozorilo proti nevarni praksi.

 opozarja na bližino neizolirane nevarne napetosti v ohišju ohlajevalnika. Napetost je dovolj visoka, da lahko povzroči električni šok.

 opozarja na vroče površine.

 opozarja, da je potrebno prebrati navodila.

Ne uporabljajte aparata kot sterilno napravo, ali napravo, povezane z bolnikom. Poleg tega naprava ni načrtovana za uporabo v napravah, ki delujejo v nevarnih okoljih I., II. in II. razreda po določilih Nacionalnega pravilnika za električne naprave.

Naprava je načrtovana za uporabo v zaprtih prostorih. Nikoli ne postavite naprave na mesto z visoko temperaturo, vlago, nezadostnim prezračevanjem in jedkimi snovmi. Delovni parametri so navedeni v navodilih.

Priključite napravo v pravilno ozemljeno vtičnico.

Uporabljena hladilna sredstva so težja od zraka. Če obstajajo netesna mesta, bodo izpodrinila kisik in povzročila izgubo zavesti. Stik z uhajajočim hladilnim sredstvom bo povzročil ozebline. Dodatne informacije boste našli na cirkulatorjevi ploščici s podatki, na kateri je naveden tip hladilnega sredstva, najnovejšem varnostnem listu za ZDA (SDS), ki je bil prej poznan pod nazivom MSDS in varnostnem listu za EU.

Previdno premikajte opremo. Nenadni sunki ali padci lahko poškodujejo njene dele. Preden premikate opremo, jo vedno izklopite in odklopite z omrežnega napajanja.

Nikoli ne delajte z opremo, ki je poškodovana ali pušča.

Nikoli ne uporabljajte vnetljivih ali jedkih tekočin. Uporabite le odobrene tekočine, navedene v predmetnih navodilih za uporabo. Preden uporabite katerokoli tekočino ali opravite vzdrževanje, pri katerem je verjeten stik s tekočino preglejte najnovejši varnostni list ZDA (SDS) in varnostni listu EU, kjer bosta našli podrobnejše informacije.

Preden premikate opremo, jo vedno izklopite in odklopite z omrežnega napajanja.

Servis in popravila lahko izvaja le ustrezno usposobljen tehnik

Shranite opremo pri temperaturi med -25 °C in 60°C (z embalažo) in relativno zračno vlago <80 %.

Razgradnjo naprave lahko opravi le ustrezno usposobljen zastopnik, ki uporablja odobreno opremo. Uporabljajte vse veljavne zadevne predpise.

Izvajanje kakršnihkoli postopkov, povezanih z montažo, delovanjem ali vzdrževanjem, ki niso navedeni v teh navodilih, lahko povzroči nevarne okoliščine in izniči veljavnost garancije proizvajalca.

Nikoli ne priključite omrežne napetosti na katerikoli komunikacijski priključek ohlajevalnika.

Če ohlajevalnik in cevi za procesni medij niso polni, lahko slednje poškoduje črpalko ohlajevalnika. Preprečite prenapolnjenost, tekočine se pri ogrevanju raztezajo.

Pri modelu ThermoFlex pred zamenjavo ohišja rezervoarja preverite, ali je krogelni ventil s pregledno cevjo pravilno nameščen.

Pri modelu ThermoFlex900-5000 ne vklopite ohlajevalnika, če ni nameščen difuzor za tekočino v rezervoarju.

Če je ohlajevalnik opremljen s črpalko, ki ima pozitivni izpodriv (P1 ali P2), poskrbite, da vodovodne cevi in fitingi prenesejo tlak vsaj 12,8 bar (185 PSI).

Ne uporabljajte avtomobilskega antifriza. Antifrizi iz redne prodaje vsebujejo silikate, ki lahko poškodujejo tesnila črpalke.

Zaradi preprečevanja zmrzovanja/zaledenitve ploskega izmenjevalnika, zahtevajo ohlajevalniki ThermoFlex7500-24000 uporabo 50/50 EG/voda ali 50/50 PG/voda pri procesni temperaturi, nižji od 10 °C.

Če uporabljate procesno tekočino EG/voda ali PG/voda, redno preverjajte koncentracijo in pH tekočine. Spremembe koncentracije in pH lahko vplivajo na zmogljivost sistema.

Ne uporabite kartuše deionizacijskega (DI) filtra z inhibiranim EG ali PG. Filter DI bo odstranil inhibitorje iz raztopine, kar pomeni, da tekočina ne bo več ščitila pred korozijo. Inhibitorji poleg tega povečajo prevodnost tekočine.

Biocidi so korozivni in lahko nepopravljivo poškodujejo oči in povzročijo kožne opekline. Škodijo pri vdihavanju, zaužitju ali absorpciji skozi kožo. Preverite proizvajalčev najnovejši SDS.

Zaradi preprečevanja poškodb ohlajevalnikovega ploščatega izmenjevalnika, zahteva centrifugalna črpalka pretok najmanj 4,0 g/m (15,1 l/m).

Če ne očistite/zamenjate filtra kondenzatorja, lahko slednje povzroči zmanjšanje hladilne zmogljivosti in predčasno odpoved hladilnega sistema. Pri temeljitem čiščenju odstranite prednjo masko.

Pri zračno hlajenih ohlajevalnikih so okvir in lamele, ki se nahajajo za prednjo rešetko zelo ostri.

Razen pri zračno hlajenem sklopu mreže nikoli ne uporabljajte ohlajevalnika, če je odstranjen katerikoli panel.

Vodno hlajeni ohlajevalniki ThermoFlex900-5000 imajo ventilatorje z ostrimi lopaticami. Preverite ali je ohlajevalnik izklopljen preden odstranite prednjo mrežo.

Namenska uporaba, recirkulacijski ohlajevalniki:

Recirkulacijski ohlajevalniki Thermo Scientific so načrtovani za nenehen dovod tekočine z enekomerno temperaturo in pretokom. Ohlajevalnik je sestavljen iz zračno ali vodno hlajenega hladilnega sistema, toplotnega izmenjevalnika, obtočne črpalke, rezervoarjem procesirane tekočine

Ohlajevalniki so načrtovani za neprekinjeno obratovanje v zaprtih prostorih v skladu z vsemi postopki in zahtevami, navedenimi v tem priročniku.

Namestitev, ohlajevalnik z recirkulacijo:

Namestite ohlajevalnik v bližino, da imate enostaven dostop do odklopne naprave.

Ohlajevalnik je namenjen za uporabo na posebni vtičnici.

Pred montažo preverite, ali so z vseh cevi odstranjeni transportni čepi.

Procesne povezave za tekočino se nahajajo na zadnji strani ohlajevalnika in so ustrezno označene  PROCESS OUTLET (PROCESNA VTIČNICA) in  PROCESS INLET (PROCESNI DOVOD). Priključite  na vhod za tekočine vaše aplikacije. Priključite  na dovod za tekočine vaše aplikacije.

Pri vodno hlajenih ohlajevalnikih priključite  FACILITY INLET (DOVOD NAPRAVE) na dovod vaše naprave. Priključite  FACILITY OUTLET (ODVOD NPRAVE) na povratni vod ali iztok vaše naprave.

Pred vklopom ohlajevalnika dvakrat preverite vse razpoložljive komunikacije ter električne in vodovodne povezave.

SR

Osnovna bezbednosna uputstva
Cirkulirajući rashladni uređaji

Ako ne razumete bilo koja od ovih uputstava, pogledajte priručnik ili nas kontaktirajte pre nego što nastavite.

Bezbednost, svi proizvodi:

DANGER označava neposrednu opasnost koja, ako se ne izbegne, će da dovede do smrti ili teške povrede.

WARNING označava potencijalno opasnu situaciju koja, ako se ne izbegne, može da dovede do smrti ili teške povrede.

CAUTION označava potencijalno opasnu situaciju koja, ako se ne izbegne, može da dovede do lakše ili srednje teške povrede. Takođe može da se koristi da upozori na nesigurne radnje.

 upozorava korisnika na prisustvo neizolovanog „opasnog napona“ unutar kućišta rashladnog uređaja. Napon je dovoljno velik da predstavlja opasnost od strujnog udara.

 ukazuje na prisustvo vrelih površina.

 ukazuje da je potrebno pročitati priručnik.

Nemojte da koristite opremu kao sterilni uređaj ili uređaj povezan na pacijenta. Pored toga, oprema nije predviđena za upotrebu na opasnim lokacijama klase I, II ili II prema definicijama Nacionalnog električnog standarda (engl. National Electrical Code).

Oprema je predviđena samo za upotrebu u zatvorenim prostorima. Nikad nemojte da je postavljate gde je prisutna prekomerna toplota, vlažnost, neodgovarajuće provetravanje ili nagrizajući materijali. Radni parametri navedeni su u priručniku.

Povežite opremu na pravilno uzemljenu utičnicu.

Korišćena sredstva za hlađenje su teža od vazduha a i, ako dođe do curenja, zameniće kiseonik te dovesti do gubitka svesti. Kontakt sa sredstvom za hlađenje koje curi uzrokuje opekotine. Pogledajte pločicu s podacima cirkulatora za vrstu korišćenog sredstva za hlađenje, a zatim potražite dodatne informacije u najnovijem bezbednosnom listu za SAD (engl. Safety Data Sheet; SDS), ranije poznatom kao MSDS, kao i bezbednosnom listu za EU.

Oprezno pomerajte opremu. Naglo drmanje ili ispuštanje opreme može da ošteti njene komponente. Pre pomeranja opreme uvek je isključite i iskopčajte iz napona izvora napajanja.

Nikad nemojte da koristite oštećenu opremu ili opremu koja propušta.

Nikad nemojte da koristite zapaljive ili nagrizajuće tečnosti. Koristite samo odobrene tečnosti koje su navedene u priručniku. Pre korišćenja bilo kakve tečnosti ili obavljanja postupaka održavanja u kojima će verovatno doći do kontakta s tečnošću, potražite dodatne informacije u najnovijem bezbednosnom listu za SAD (engl. Safety Data Sheet; SDS) i bezbednosnom listu za EU.

Pre pomeranja opreme uvek je isključite i iskopčajte iz napona izvora napajanja.

Servisiranje i popravke treba da obavlja kvalifikovani serviser.

Opremu držite na rasponu temperature od -25 °C do 60 °C (s pakovanjem) i relativnoj vlažnosti od <80 %.

Stavljanje izvan pogona mora da obavi isključivo kvalifikovani trgovac pomoću certifikovane opreme. Mora da se pridržava svih važećih propisa.

Obavljanje postupaka ugradnje, korišćenja ili održavanja koji nisu opisani u priručniku može da dovede do opasne situacije i poništiće garanciju proizvođača.

Nikad nemojte da primenjujte linijski napon na komunikacijske priključke na rashladnom uređaju.

Ako ne napunite rashladni uređaj i creva za radnu tečnost do kraja, može da dođe do oštećenje pumpe rashladnog uređaja. Nemojte da prepunjavate jer se tečnost širi prilikom zagrevanja.

Na rashladnom uređaju ThermoFlex, pre zamene kućišta rezervoara potrebno je proveriti da čep indikatora nivoa u rezervoaru bude čvrsto na mestu.

Rashladni uređaj ThermoFlex900-5000 nemojte da koristite ako difuzor rezervoara nije ugrađen.

Ako je rashladni uređaj opremljen volumetrijskom pumpom (P1 ili P2), pazite da vodovodna creva i spojnice mogu da podnesu najmanje 185 psi.

Nemojte da koristite antifriz za automobile. Komercijalni antifriz sadrži silikate koji oštećuju zaptivke pumpe.

Da bi se sprečilo smrzavanje pločastog izmenjivača, rashladni uređaji ThermoFlex7500-24000 zahtevaju upotrebu mešavine od 50/50 etilen glikola/vode ili 50/50 propilen glikola/vode na radnoj temperaturi ispod 10 °C.

Prilikom upotrebe mešavine radne tečnosti od etilen glikola/vode ili propilen glikola/vode, redovno proveravajte koncentraciju tečnosti i pH vrednost. Promene u koncentraciji i pH vrednosti mogu da utiču na performanse sistema .

Nemojte da koristite uložak filtera za dejonizaciju s inhibiranim etilen glikolom ili inhibiranim propilen glikolom. Filter za dejonizaciju uklanja inhibitore iz rastvora, što tečnost čini neefikasnom za zaštitu od korozije. Pored toga, inhibitori povećavaju provodljivost tečnosti.

Biocidi su nagrizajući i mogu da dovedu do nepopravljivih oštećenja očiju i opekotina. Štetni su ako se udahnu, progutaju ili upiju kroz kožu. Pogledajte najnoviji bezbednosni list proizvođača.

Da bi se sprečilo oštećenje pločastog izmenjivača rashladnog uređaja, centrifugalne pumpe zahtevaju minimalni protok od 4,0 g/min (15,1 l/min).

Ako se filter kondenzatora ne čisti/menja, dolazi do gubitka kapaciteta hlađenja i prevremenog kvara sistema hlađenja. Za temeljito čišćenje uklonite sklop prednje rešetke.

Na vazduhom hlađenim rashladnim uređajima okvir i vertikalni stabilizatori kondenzatora nalaze se iza sklopa prednje rešetke i vrlo su oštri.

S izuzetkom vazduhom hlađenog sklopa rešetke nikad nemojte da koristite rashladni uređaj kad je bilo koja ploča skinuta.

Vodom hlađeni rashladni uređaji ThermoFlex900-5000 imaju ventilator s oštrim lopaticama i zato rashladni uređaj morate da isključite pre skidanja prednje rešetke.

Namena, cirkulirajući rashladni uređaji:

Cirkulirajući rashladni uređaji kompanije Thermo Scientific su predviđeni za pružanje neprekidne isporuke tečnosti uz konstantnu temperaturu i protok. Rashladni uređaj se sastoji od vazduhom hlađenog ili vodom hlađenog rashladnog sistema, izmenjivača toplote, cirkulirajuće pumpe, rezervoara radne tekućine i kontrolera mikroprocesora.

Rashladni uređaji su predviđeni za neprekidan rad i upotrebu u zatvorenim prostorima u skladu sa svim postupcima i zahtevima navedenim u njihovim priručnicima.

Ugradnja, cirkulirajući rashladni uređaji:

Postavite rashladni uređaj tako da bude blizu i ima lak pristup svom uređaju za iskopčavanje.

Rashladni uređaj je predviđen za upotrebu na namenskoj utičnici.

Obavezno skinite sve ambalažne čepove vodovodnih creva pre ugradnje.

Priključci rashladne tekućine nalaze se sa zadnje strane rashladnog uređaja i označeni su sa  (PROCESS OUTLET) (radni izlazni otvor) i  (PROCESS INLET) (radni ulazni otvor). Povežite  na ulazni otvor za tečnost na uređaju. Povežite  na izlazni otvor za tečnost na uređaju.

Kod vodom hlađenih rashladnih uređaja povežite  (FACILITY INLET) (ulazni otvor za postrojenje) na vodosnabdevanje postrojenja. Povežite (FACILITY OUTLET) (izlazni otvor postrojenja na povratni vod ili odvod postrojenja.

Pre pokretanja rashladnog uređaja dvaput proverite sve relevantne komunikacijske, električne i vodovodne priključke.

SK

Základné bezpečnostné pokyny
Recirkulačné chladiace jednotky

Ak nerozumiete niektorému z týchto pokynov, pred pokračovaním si prečítajte príručku alebo nás kontaktujte.

Bezpečnosť, všetky produkty:

DANGER označuje bezprostredne nebezpečnú situáciu, ktorá, ak sa jej nevyhnete, spôsobí usmrtenie alebo vážne poranenie.

WARNING označuje potenciálne nebezpečnú situáciu, ktorá, ak sa jej nevyhnete, môže spôsobiť usmrtenie alebo vážne poranenie.

CAUTION označuje potenciálne nebezpečnú situáciu, ktorá, ak sa jej nevyhnete, môže spôsobiť ľahké alebo stredne ťažké poranenie. Používa sa aj ako varovanie pred nebezpečnými postupmi.

 slúži na upozornenie používateľa na prítomnosť neizolovaného „nebezpečného napätia“ pod krytom chladiacej jednotky. Napätie je dostatočne vysoké na to, aby predstavovalo riziko úrazu elektrickým prúdom.

 označuje prítomnosť horúcich povrchov.

 označuje nutnosť prečítania príručky.

Zariadenie nepoužívajte ako sterilné alebo ako zariadenie pripojené k pacientovi. Zariadenie okrem toho nie je určené na použitie v nebezpečných prostrediach triedy I, II alebo III definovaných kódom NEC (National Electrical Code).

Zariadenie je určené len na použitie v interiéri. Nikdy ho neumiestňujte na mieste, kde je prítomné nadmerné teplo, vlhkosť, nedostatočné vetranie alebo korozívne materiály. Prečítajte si prevádzkové parametre uvedené v príručke.

Zariadenie pripojte k správne uzemnenej zásuvke.

Použité chladivá sú ťažšie ako vzduch a ak dôjde k úniku, nahradia kyslík a spôsobia stratu vedomia. Kontakt s unikajúcim chladivom môže spôsobiť popálenie pokožky. Typ použitého chladiva nájdete na typovom štítku obehového čerpadla a ďalšie informácie nájdete v poslednej karte bezpečnostných údajov (KBÚ) pre USA, predtým známej ako MSDS a karte bezpečnostných údajov pre EÚ.

Zariadenie presúvajte opatrne. Náhle otrasy alebo pády môžu poškodiť jeho komponenty. Pred každým presúvaním vypnite zariadenie a odpojte ho od napájacieho napätia.

Nikdy nepoužívajte poškodené alebo netesné zariadenie.

Nikdy nepoužívajte horľavé alebo korózne kvapaliny. Používajte iba schválené kvapaliny uvedené v návode na použitie. Pred použitím akejkoľvek kvapaliny alebo vykonaním údržby, kde je pravdepodobný kontakt s kvapalinou, si prečítajte poslednú kartu bezpečnostných údajov (KBU) pre USA a kartu bezpečnostných údajov pre EÚ, v ktorých nájdete ďalšie informácie.

Pred každým presúvaním vypnite zariadenie a odpojte ho od napájacieho napätia.

Servis a opravy prenechajte kvalifikovanému technikovi.

Zariadenie skladujte pri teplotách -25 °C až 60 °C (s obalom) a pri relatívnej vlhkosti <80 %.

Vyradenie z prevádzky môže vykonať len oprávnený predajca pomocou certifikovaného vybavenia. Je nutné dodržiavať všetky platné zákonné ustanovenia.

Vykonanie inštalácie, prevádzky alebo postupov údržby, ktoré nie sú popísané v tomto návode, môže viesť k nebezpečným situáciám a bude viesť k zrušeniu platnosti záruky výrobcu.

Nikdy nepripájajte sieťové napätie k niektorému z komunikačných pripojení na chladiacej jednotke.

Neúplné naplnenie chladiacej jednotky a potrubí s procesnými kvapalinami môže poškodiť čerpadlo chladiacej jednotky. Zabráňte preplneniu, kvapaliny sa po zohriatí rozťahujú.

Pred opätovným nasadením krytu nádržky na jednotkách ThermoFlex zaistite, aby bola guľová zarážka potrubia nádrže bezpečne na svojom mieste.

Pri jednotkách ThermoFlex900-5000 neprevádzkujte chladiacu jednotku, kým nie je nainštalovaný difúzor kvapaliny v nádržke.

Ak je chladiaca jednotka vybavená objemovým čerpadlom (P1 alebo P2), zaistite, aby inštalované potrubia a tvarovky boli dimenzované tak, aby odolali tlaku minimálne 185 psi.

Nepoužívajte automobilovú nemrznúcu kvapalinu. Komerčné nemrznúce zmesi obsahujú silikáty, ktoré poškodzujú tesnenia čerpadla.

Aby sa zabránilo zamrznutiu/zaneseniu doskového výmenníka, chladiace jednotky ThermoFlex7500-24000 vyžadujú použitie kvapaliny 50/50 EG/voda alebo 50/50 PG/voda pri procesnej teplote do 10 °C.

Pri použití zmesi procesnej kvapaliny EG/voda alebo PG/voda v pravidelných intervaloch kontrolujte koncentráciu kvapaliny a pH. Zmeny v koncentrácii a pH môžu mať vplyv na výkon systému. Nepoužívajte deionizačné (DI) filtračné vložky s inhibovanou EG alebo inhibovanou PG.

Filter DI odstráni inhibítory z roztoku a spôsobí, že bude mať kvapalina neúčinnú protikoróznu ochranu. Inhibítory tiež zvyšujú vodivosť kvapaliny.

Biocídy sú korózne a môžu spôsobiť nevratné poškodenie očí a popálenie pokožky. Sú škodlivé pri vdýchnutí, požití alebo pri absorpcii cez pokožku. Prečítajte si poslednú KBÚ výrobcu.

Aby nedošlo k poškodeniu doskového výmenníka chladiacej jednotky, odstredivé čerpadlá musia mať minimálny prietok 4,0 g/min (15,1 l/min).

Ak nevyčistíte/nevymeníte filter kondenzátora, dôjde k strate chladiaceho výkonu a k predčasnému zlyhaniu chladiaceho systému. Pre dôkladné vyčistenie vyberte zostavu prednej mriežky.Na vzduchom chladených chladiacich jednotkách sú rám a lopatky umiestnené za zostavou prednej mriežky veľmi ostré.

V prípade iných ako vzduchom chladených zostáv mriežky nikdy neprevádzkujte chladiace jednotky, ak je odstránený akýkoľvek panel.

Vodou chladené chladiace jednotky ThermoFlex900-5000 majú ventilátor s ostrými čepeľami. Pred vybratím prednej mriežky sa uistite, že je chladič vypnutý.

Určené použitie, recirkulačné chladiace jednotky:

Recirkulačné chladiace jednotky Thermo Scientific sú navrhnuté na nepretržitú dodávku kvapaliny pri konštantnej teplote a prietoku. Chladiaca jednotka pozostáva z chladiaceho systému alebo vzduchom chladeného alebo vodou chladeného výmenníka tepla, recirkulačného čerpadla, nádrže na procesnú kvapalinu a mikroprocesorového regulátora.

Chladiace jednotky sú určené na nepretržitú prevádzku a na vnútorné použitie v súlade so všetkými postupmi a požiadavkami uvedenými v príslušnom návode na použitie.

Inštalácia, recirkulačné chladiace jednotky:

Chladiacu jednotku umiestnite tak, aby bola blízko odpájacieho zariadenia, aby bol k nemu ľahký prístup.

Chladiaca jednotka je určená na pripojenie k vyhradenej zásuvke.

Uistite sa, že sú pred inštaláciou odstránené všetky prepravné zátky inštalatérskych potrubí.

Prípojky pre procesnú kvapalinu sú umiestnené na zadnej strane chladiacej jednotky a sú označené ako  (PROCESS OUTLET) (PROCESNÝ VÝSTUP) a  (PROCESS INLET) (PROCESNÝ VSTUP). Pripojte  k vstupu kvapaliny na vašej aplikácii. Pripojte  k výstupu kvapaliny na vašej aplikácii.

V prípade vodou chladených chladiacich jednotiek pripojte  FACILITY INLET (VSTUP ZARIADENIA) k prívodu vody zariadenia. Pripojte  (FACILITY OUTLET) (VÝSTUP ZARIADENIA) k návratu alebo odvodu vody zariadenia.

Pred spustením chladiacej jednotky dvakrát skontrolujte všetky príslušné komunikačné, elektrické a vodovodné prípojky.

SV

Viktiga säkerhetsinstruktioner
Återcirkulerande kylare

Om någon av dessa anvisningar är svåra att förstå se handboken eller kontakta oss innan du går vidare.

Säkerhet, alla produkter:

⚠ DANGER anger en imminent riskfylld situation som, om den inte undviks, resulterar i allvarliga skador eller dödsfall.

⚠ WARNING anger en riskfylld situation som, om den inte undviks, kan resultera i dödsfall eller allvarlig skada.

⚠ CAUTION anger en riskfylld situation som, om den inte undviks, kan resultera i lättare eller medelsvåra skador. Den ska även användas för att varna om riskfyllda metoder.

 avsedd för att varna användaren om ej isolerad "farlig spänning" inuti kylarens hölje. Spänningen är tillräckligt hög för att utgöra en risk för elchock.

 anger att det finns heta ytor.

 anger att man bör läsa i handboken.

Använd inte utrustningen som steril eller ansluten till patient. Utrustningen är heller inte designad för användning i riskfyllda miljöer Klass I, II eller III, enligt definition i Nationella elbestämmelser.

Utrustningen är endast designad för inomhusbruk. Placera den aldrig på en plats med hög värme, fuktighet, otillräcklig ventilation eller där det förekommer frätande ämnen. Se handboken för driftsparametrar.

Anslut utrustningen till ett korrekt jordat uttag.

Kylmedium som används är tyngre än luft och kommer, om en läcka uppstår, att tränga ut syre vilket orsakar medvetslöshet. Kontakt med läckande kylmedium orsakar brännskador på hud. Se cirkulationspumpens namnskylt för typ av kylmedium som används och sedan tillverkarens aktuella US Säkerhetsdatablad (SDS), tidigare kallat MSDS, och EU Säkerhetsdatablad för ytterligare information.

Flytta utrustningen varsamt. Plötsliga ryck eller fall kan skada dess komponenter. Stäng alltid av utrustningen och koppla bort strömförsörjningen innan den flyttas.

Använd aldrig skadad eller läckande utrustning.

Använd aldrig brandfarliga eller frätande vätskor. Använd endast godkända vätskor som listas i handboken. Innan man använder vätskor eller utför underhåll där man troligen kommer i kontakt med vätskor ska man se tillverkarens aktuella US Säkerhetsdatablad (SDS) och EU Säkerhetsdatablad för ytterligare information.

Stäng alltid av utrustningen och koppla bort strömförsörjningen innan den flyttas.

Överlåt service och reparationer till en behörig tekniker.

Förvara utrustningen inom temperaturområdet -25°C till 60°C (i förpackning) och <80 % relativ luftfuktighet.

Urtagning ur drift för endast utföras av behörig återförsäljare med certifierad utrustning. Alla gällande bestämmelser måste följas.

Installations-, drift- eller underhållsprocedurer, förutom de som beskrivs i handboken, kan resultera i riskfyllda situationer och kommer att upphäva tillverkarens garanti.

Applicera aldrig nätspänning till någon av kylarens kommunikationsanslutningar.

Om man inte fyller kylaren och processvätskeledningar helt så kan kylarens pump skadas. Undvik överfyllning. Vätskor expanderar när de värms upp.

Innan man byter ut behållaren på ThermoFlex, så måste man försäkra att kulan i siktröret sitter säkert på plats.

På ThermoFlex900-5000 får man inte använda kylaren om vätskediffusern inte är installerad på behållaren.

På ThermoChill får man inte fylla över läppen, då vätska kommer att läcka ut vid tankens topp över komponenterna inuti kylaren.

Om din kylare har en positiv deplacementpump (P1 eller P2), ska du försäkra att ledningarna är klassade för ett tryck på minst 185 psi.

Använd inte kylmedel för bilar. Kommersiella frysskydd innehåller silikat som skadar pumpens tätningar.

För att undvika frysning/frost av plattvärmeväxlaren, så kräver kylarna ThermoFlex7500-24000 att man använder 50/50 EG/vatten eller 50/50 PG/vatten under 10°C processtemperatur.

När man använder en vätskeblandning med EG/vatten eller PG/vatten, så ska man kontrollera vätskekoncentrationen och pH-värdet regelbundet. Ändringar i koncentration och pH-värde kan påverka systemets prestanda.

Använd inte avjoningsfilter (DI) med inhiberat EG eller inhiberat PG. Ett avjoningsfilter avlägsnar inhibitorer från lösningen vilket gör vätskan ineffektiv mot rost. Inhibitorer höjer även vätskans konduktivitet.

Biocider är frätande och kan orsaka permanenta skador på ögon och brännskador på huden. De är skadliga vid inandning, förtäring eller om de absorberas genom huden. Se tillverkarens aktuella SDS.

För att förebygga skador på kylarens plattvärmeväxlare, så kräver centrifugalpumparna ett flöde på minst 4,0 gpm (15,1 lpm).

Om man inte rengör/ersätter kondesatorfiltret förlorar man kylningsprestanda, vilket snabbare leder till fel i kylningssystemet. För en grundlig rengöring så avlägsnar man frontgallret.

På luftkylda kylare så är kondesatorns ram och fenor bakom gallret mycket skarpa.

Förutom med det luftkylda gallret så ska man aldrig starta kylaren med någon panel borttagen.

ThermoFlex900-5000 vattenkylda kylare har en fläkt med skarpa blad, så försäkra att kylaren är avstängd innan frontgallret avlägsnas.

Avsedd användning, Återcirkuleringskylare:

Återcirkuleringskylare från Thermo Scientific är designade för att tillhandahålla kontinuerligt vätskeflöde vid en konstant temperatur och och hastighet. Kylaren består av ett lyft- eller vattenkylt kylningssystem, värmeväxlare, återcirkuleringspump, behållare för processvätska och en styrmodul med mikroprocessor.

Kylare är designade för kontinuerlig drift och för inomhusbruk i enlighet med alla procedurer och krav som anges i denna handbok.

Installation, Återcirkulerande kylare:

Placera kylaren så att den befinner sig nära, med enkel åtkomst till, dess avstängningsanordning.

Kylaren är avsedd för att användas med ett för detta avsett uttag.

Försäkra att alla transportskydd avlägsnas från rör innan installation.

För att förebygga skador vid installation/borttagning av rören på Polar-kylare, så ska man använda en 19 mm nyckel på de externa anslutningarna-

Processvätskornas anslutningar sitter på kylarens baksida och är märkta med  (PROCESS OUTLET) och  (PROCESS INLET). Anslut  till vätskeinloppet på er applikation. Anslut  till vätskeutloppet på er applikation.

För vattenkylda kylare så ansluter man  (FACILITY INLET) till er anläggnings vattenförsörjning. Anslut  (FACILITY OUTLET) till er anläggnings vattenretur eller avlopp.

Innan kylaren startas så ska man dubbelkolla alla kommunikationer, samt elektriska och avloppsanslutningar.

Section 2 General Information

Description

The Thermo Scientific ThermoFlex™ recirculating chillers are designed to provide a continuous supply of fluid at a constant temperature and flow rate. The chiller consists of an air-cooled or water-cooled refrigeration system, heat exchanger, recirculating pump, reservoir and a microprocessor controller.

Specifications

	ThermoFlex900	ThermoFlex1400	ThermoFlex2500
Standard Chiller Process Fluid Temperature/Setpoint Range	+5°C to +40°C +41°F to +104°F	+5°C to +40°C +41°F to +104°F	+5°C to +40°C +41°F to +104°F
High-Temperature Chiller Process Fluid Temperature/Setpoint Range	Not Available Not Available	+5°C to +90°C +41°F to +194°F	+5°C to +90°C +41°F to +194°F
Ambient Temperature Range All Chillers	+ 10°C to +40°C + 50°F to +104°F	+10°C to +40°C +50°F to +104°F	+10°C to +40°C +50°F to +104°F
Temperature Stability	±0.1°C	±0.1°C	±0.1°C
Cooling Capacity at 20°C 60 Hz 50 Hz	900 W (3074 BTU) 750 W (2561 BTU)	1400 W (4781 BTU) 1170 W (3996 BTU)	2500 W (8538 BTU)* 2200 W (7513 BTU)
	*To meet this specification, the ThermoFlex2500 air-cooled chillers require the fan to be operating in the high-speed mode, see Section 3.		
Heater Size 208V/230V	Not Available	1.0kW/1.2kW or 2.3kW/2.8kW	2.3kW/2.8kW
Refrigerant	R134A	R134A	R134A
Reservoir Volume Gallons Liters	1.9 7.2	1.9 7.2	1.9 7.2
Footprint or Dimensions (H x W x D)			
Inches	27.3 x 14.2 x 24.6	27.3 x 14.2 x 24.6	29.0 x 17.2 x 26.5
Centimeters	69.2 x 36.0 x 62.4	69.2 x 36.0 x 62.4	73.6 x 43.6 x 67.3
Weight P 2 Pump (empty) lb kg	130.5 59.2	130.5 59.2	175.5 79.6
Pumping Capacity			
P 1/MD 1 - Positive Displacement 60 Hz* 50 Hz*	2.1 gpm @ 60 psig (7.9 lpm @ 4.1 bar) 1.7 gpm @ 60 psig (6.4 lpm @ 4.1 bar)		
P 2/MD 2 - Positive Displacement 60 Hz 50 Hz	4.0 gpm @ 60 psig (15.1 lpm @ 4.1 bar) 3.3 gpm @ 60 psig (12.5 lpm @ 4.1 bar)		
T 0 - Turbine 60 Hz* 50 Hz*	2.0 gpm @ 60 psid (7.6 lpm @ 4.1 bar) 1.3 gpm @ 60 psid (4.9 lpm @ 4.1 bar)		
T 1 - Turbine 60 Hz* 50 Hz*	3.5 gpm @ 60 psid (13.3 lpm @ 4.1 bar) 2.5 gpm @ 60 psid (9.5 lpm @ 4.1 bar)		

* Pumping capacity pressure values for turbine pumps are differential pressures between the inlet and the outlet of the chiller.

- Cooling capacity based on P 2 pumps with no backpressure. Heat input from the pump will result in a reduction in cooling capacity. The cooling capacity reduction will vary based on the pump chosen as well as pump backpressure and flow.
- Specifications obtained at sea level using water as the recirculating fluid, at a 20°C process setpoint, 25°C ambient condition, at nominal operating voltage. Other fluids, fluid temperatures, ambient temperatures, altitude or operating voltages will affect performance. See Section 3.
- Additional dimensions are at the end of this section, add 1/8" (3 mm) to height for SEMI.
- Add 5 pounds (2 kilograms) for global voltage chillers.
- Thermo Fisher Scientific reserves the right to change specifications without notice.

Specifications

	ThermoFlex3500	ThermoFlex5000
Standard Chiller Process Fluid Temperature/Setpoint Range	+5°C to +40°C +41°F to +104°F	+5°C to +40°C +41°F to +104°F
High-Temperature Chiller Process Fluid Temperature/Setpoint Range	+5°C to +90°C +41°F to +194°F	+5°C to +90°C +41°F to +194°F
Ambient Temperature Range All Chillers	+10°C to +40°C +50°F to +104°F	+10°C to +40°C +50°F to +104°F
Temperature Stability	±0.1°C	±0.1°C
Cooling Capacity at 20°C 60 Hz 50 Hz	3500 W (11953 BTU) 3050 W (10416 BTU)	5000 W (17076 BTU) 4400 W (15027 BTU)
Heater Size 208V/230V	2.3kW/2.8kW	2.3kW/2.8kW
Refrigerant	R407C	R407C
Reservoir Volume Gallons Liters	1.9 7.2	1.9 7.2
Footprint or Dimensions (H x W x D) Inches Centimeters	 38.9 x 19.3 x 30.9 98.7 x 48.8 x 78.4	 38.9 x 19.3 x 30.9 98.7 x 48.8 x 78.4
Weight P1/ P2/P3/P4 (empty) lb kg	264/264/270/303 120/120/123/138	NA/264/270/303 NA/120/123/138
Pumping Capacity		
P1/MD1 - Positive Displacement 60 Hz* 50 Hz*	2.1 gpm @ 60 psig (7.9 lpm @ 4.1 bar) 1.7 gpm @ 60 psig (6.4 lpm @ 4.1 bar)	Not Available Not Available
P2/MD2 - Positive Displacement 60 Hz 50 Hz	4.0 gpm @ 60 psig (15.1 lpm @ 4.1 bar) 3.3 gpm @ 60 psig (12.5 lpm @ 4.1 bar)	4.0 gpm @ 60 psig (15.1 lpm @ 4.1 bar) 3.3 gpm @ 60 psig (12.5 lpm @ 4.1 bar)
T1 - Turbine 60 Hz* 50 Hz*	3.5 gpm @ 60 psid (13.3 lpm @ 4.1 bar) 2.5 gpm @ 60 psid (9.5 lpm @ 4.1 bar)	3.5 gpm @ 60 psid (13.3 lpm @ 4.1 bar) 2.5 gpm @ 60 psid (9.5 lpm @ 4.1 bar)
P3 - Centrifugal Pump 60 Hz* 50 Hz*	10 gpm @ 32 psid (37.9 lpm @ 2.2 bar) 10 gpm @ 20 psid (37.9 lpm @ 1.4 bar)	10 gpm @ 32 psid (37.9 lpm @ 2.2 bar) 10 gpm @ 20 psid (37.9 lpm @ 1.4 bar)
P4 - Centrifugal Pump 60 Hz* 50 Hz*	15 gpm @ 57 psid (56.8 lpm @ 3.9 bar) 15 gpm @ 34 psid (56.8 lpm @ 2.3 bar)	15 gpm @ 57 psid (56.8 lpm @ 3.9 bar) 15 gpm @ 34 psid (56.8 lpm @ 2.3 bar)

* Pumping capacity pressure values for turbine and centrifugal pumps are differential pressures between the inlet and the outlet of the chiller.

- Cooling capacity based on P2 pumps with no backpressure. Heat input from the pump will result in a reduction in cooling capacity. The cooling capacity reduction will vary based on the pump chosen as well as pump backpressure and flow.
- Specifications obtained at sea level using water as the recirculating fluid, at a 20°C process setpoint, 25°C ambient condition, at nominal operating voltage. Other fluids, fluid temperatures, ambient temperatures, altitude or operating voltages will affect performance. See Section 3.
- Additional dimensions are at the end of this section, add 1/8" (3 cm) to height for SEMI.
- Add 30 pounds (14 kilograms) for global voltage chillers.
- Thermo Fisher Scientific reserves the right to change specifications without notice.

Specifications

	ThermoFlex7500	ThermoFlex10000
Standard Chiller Process Fluid Temperature/Setpoint Range	+5°C to +40°C +41°F to +104°F	+5°C to +40°C +41°F to +104°F
High-Temperature Chiller Process Fluid Temperature/Setpoint Range	+5°C to +90°C +41°F to +194°F	+5°C to +90°C +41°F to +194°F
Ambient Temperature Range All Chillers	+10°C to +40°C +50°F to +104°F	+10°C to +40°C +50°F to +104°F
Temperature Stability	± 0.1°C	± 0.1°C
Cooling Capacity at 20°C 60 Hz 50 Hz	7500 W (25575 BTU) 6425 W (21910 BTU)	10000 W (34100 BTU) 8500 W (28985 BTU)
Heater Size	5.0kW at 208V/6.1kW at230V 4.6kW at 400V/6.1kW at460V	5.0kW at 208V/6.1kW at230V 4.6kW at 400V/6.1kW at460V
Refrigerant	R407C	R407C
Reservoir Volume Gallons Liters	4.75 17.9	4.75 17.9
Footprint or Dimensions (H x W x D)		
Air-Cooled Inches Centimeters	52.3 x 25.2 x 33.8 132.7 x 63.9 x 85.6	52.3 x 25.2 x 33.8 132.7 x 63.9 x 85.6
Water-Cooled Inches Centimeters	45.9 x 25.2 x 33.8 116.6 x 63.9 x 85.6	45.9 x 25.2 x 33.8 116.6 x 63.9 x 85.6
Weight P 2/P 3/P 5 (empty)		
Air-Cooled lb kg	356/372.5/405.5 161.5/169/184	356/372.5/405.5 161.5/169/184
Water-Cooled lb kg	315/331.5/364.5 143/150/165	315/331.5/364.5 143/150/165
Pumping Capacity		
P 2/MD 2 - Positive Displacement 60 Hz* 50 Hz*	4.0 gpm @ 60 psig (15.1 lpm @ 4.1 bar) 3.3 gpm @ 60 psig (12.5 lpm @ 4.1 bar)	4.0 gpm @ 60 psig (15.1 lpm @ 4.1 bar) 3.3 gpm @ 60 psig (12.5 lpm @ 4.1 bar)
P 3 - Centrifugal Pump 60 Hz* 50 Hz*	10 gpm @ 32 psid (37.9 lpm @ 2.2 bar) 10 gpm @ 20 psid (37.9 lpm @ 1.4 bar)	10 gpm @ 32 psid (37.9 lpm @ 2.2 bar) 10 gpm @ 20 psid (37.9 lpm @ 1.4 bar)
P 5 - Centrifugal Pump 60 Hz* 50 Hz*	20 gpm @ 60 psid (75.7 lpm @ 4.1 bar) 20 gpm @ 35 psid (75.7 lpm @ 2.4 bar)	20 gpm @ 60 psid (75.7 lpm @ 4.1 bar) 20 gpm @ 35 psid (75.7 lpm @ 2.4 bar)
T 5 - Turbine Pump 60 Hz* 50 Hz*	8.0 gpm @ 52 psid (30.3 lpm @ 3.6 bar) 8.0 gpm @ 20 psid (30.3 lpm @ 1.4 bar)	8.0 gpm @ 52 psid (30.3 lpm @ 3.6 bar) 8.0 gpm @ 20 psid (30.3 lpm @ 1.4 bar)

* Pumping capacity pressure values for centrifugal and turbine pumps are differential pressures between the inlet and the outlet of the chiller. P 5 pumping capacity in high temperature chillers is slightly lower, see P 5 Pumping Capacity curves in this Section.

- Cooling capacity based on P 2 pumps with no backpressure. Heat input from the pump will result in a reduction in cooling capacity. The cooling capacity reduction will vary based on the pump chosen as well as pump backpressure and flow.
- Specifications obtained at sea level using water as the recirculating fluid, at a 20°C process setpoint, 25°C ambient condition, at nominal operating voltage. Other fluids, fluid temperatures, ambient temperatures, altitude or operating voltages will affect performance. See Section 3.
- Additional dimensions are at the end of this section.
- Add 30 pounds (14 kilograms) for global voltage chillers with a P 2 pump. Add 10 pounds (4.5 kilograms) for chillers with a P 3 or P 5 pump.
- Thermo Fisher Scientific reserves the right to change specifications without notice.

Cooling Capacity

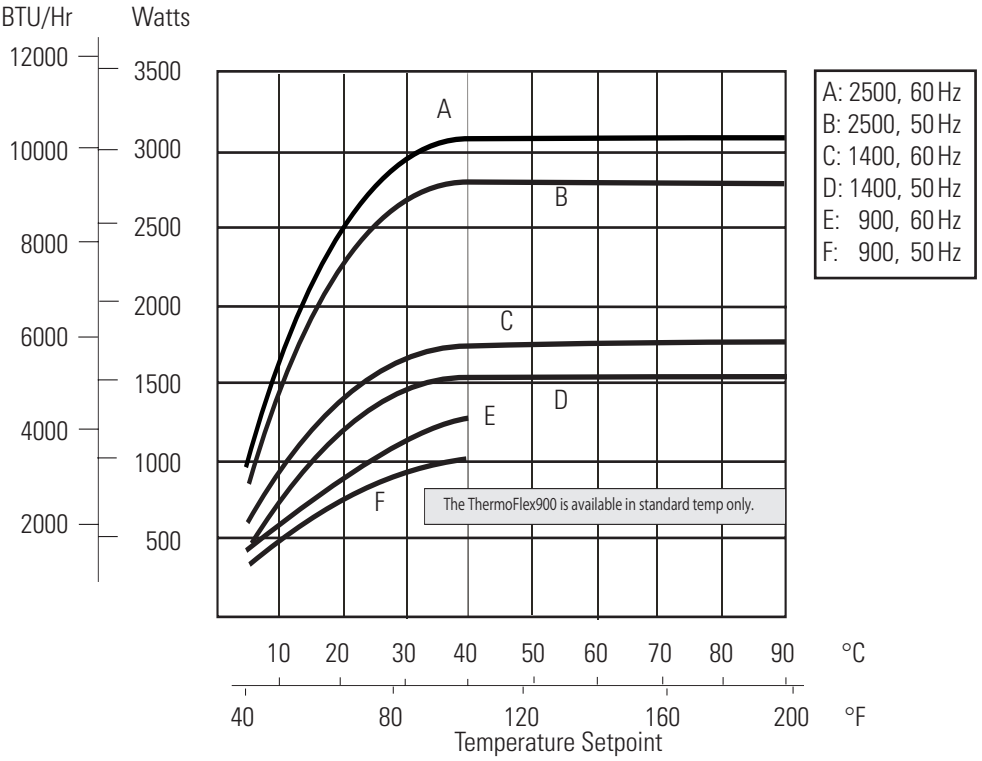

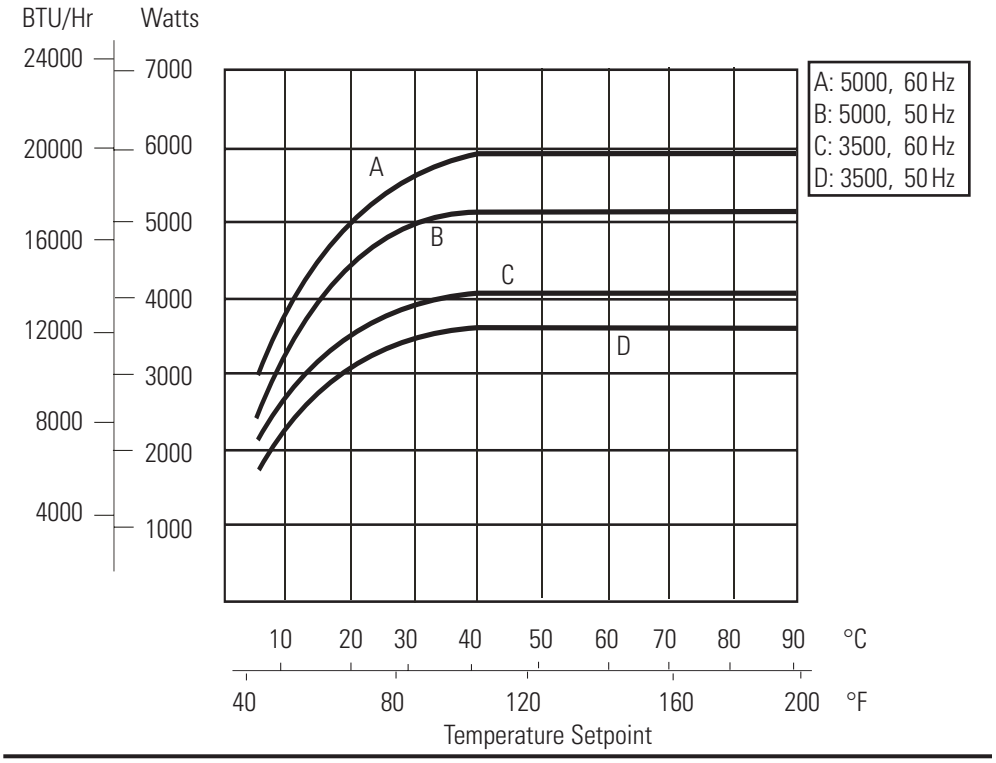

- Specifications obtained at sea level using water as the recirculating fluid, at a 20°C process setpoint, 25°C ambient condition, at nominal operating voltage, on chillers with P2 pumps with no back pressure. Other fluids, fluid temperatures, ambient temperatures, altitude, operating voltages or pumps will affect performance. See Section 3.
- Thermo Fisher Scientific reserves the right to change specifications without notice.

Cooling Capacity

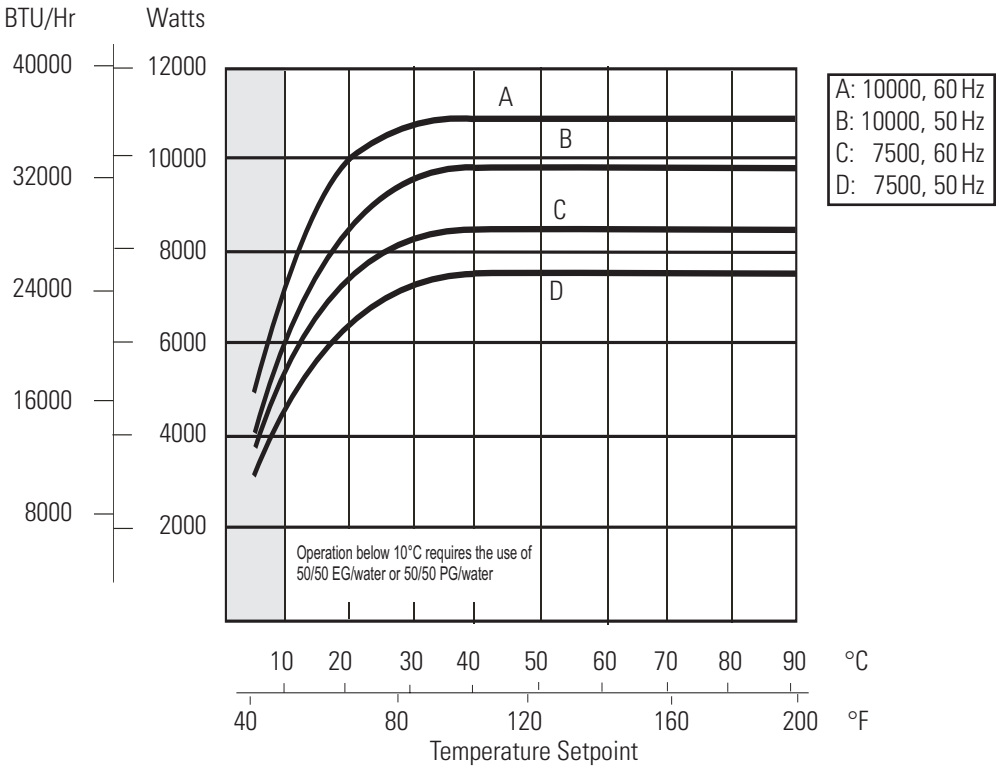

- Specifications obtained at sea level using water as the recirculating fluid, at a 20°C process setpoint, 25°C ambient condition, at nominal operating voltage, on chillers with P 2 pumps with no back pressure. Other fluids, fluid temperatures, ambient temperatures, altitude, operating voltages or pumps will affect performance. See Section 3.
- Chillers require the use of 50/50 EG/water or 50/50 PG/water below 10°C process temperature to prevent freezing/glazing of the plate exchanger.
- Thermo Fisher Scientific reserves the right to change specifications without notice.

Pumping Capacity
Positive Displacement Pump P 1/P 2
Magnetic Drive Pumps MD 1/MD 2

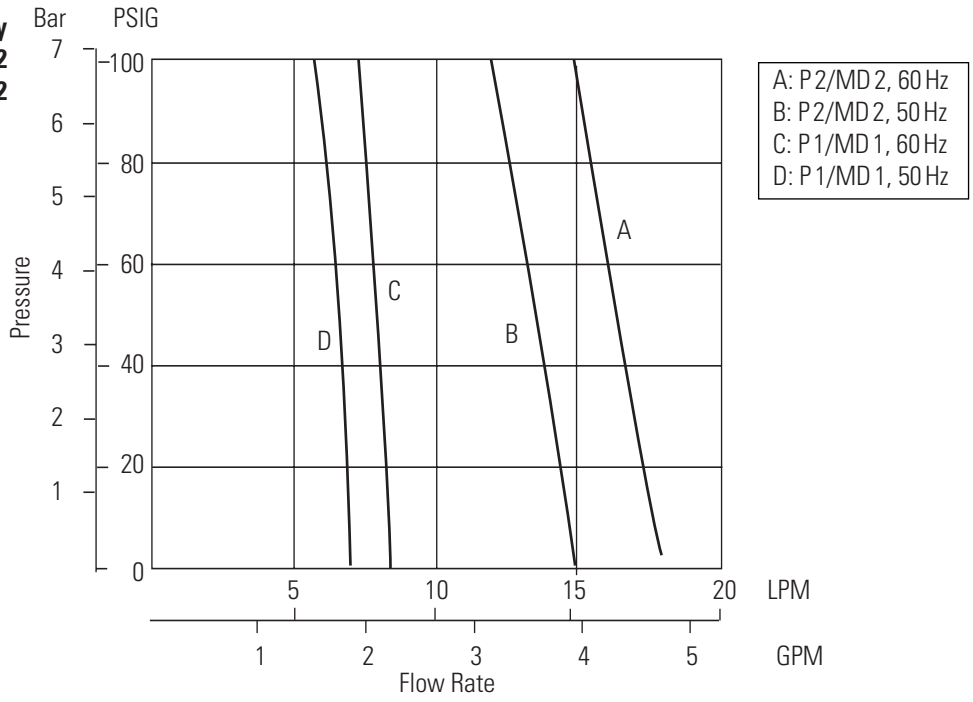

Pumping Capacity
Turbine Pump T 1/ T 5

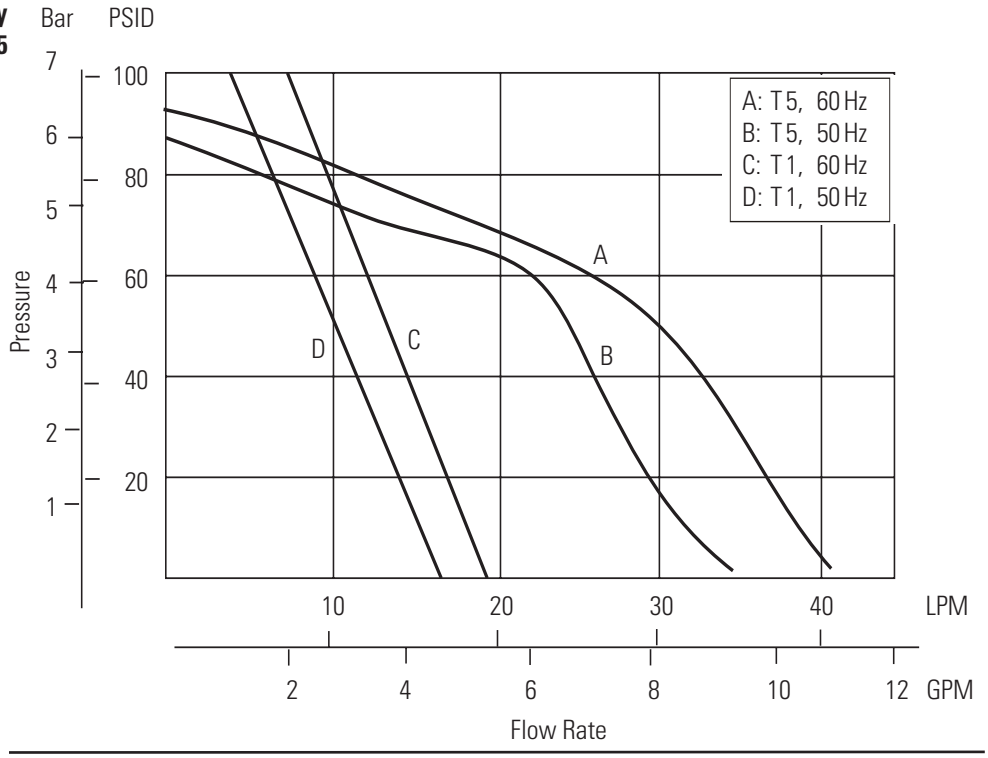

- Pump curves are nominal values. Pressure values for turbine pumps are differential pressures between the inlet and the outlet of the chiller.
- Pump performance results were obtained with no restrictions on the return to the system or with any options installed. For example, utilizing the DI option will result in a 0.5 gpm flow reduction.
- Specifications obtained at sea level using water as the recirculating fluid, at a 20°C process setpoint, 25°C ambient condition, at nominal operating voltage. Other fluids, fluid temperatures, ambient temperatures, altitude or operating voltages will affect performance. See Section 3.
- Thermo Fisher Scientific reserves the right to change specifications without notice.

Pumping Capacity
Centrifugal Pump P3/P4

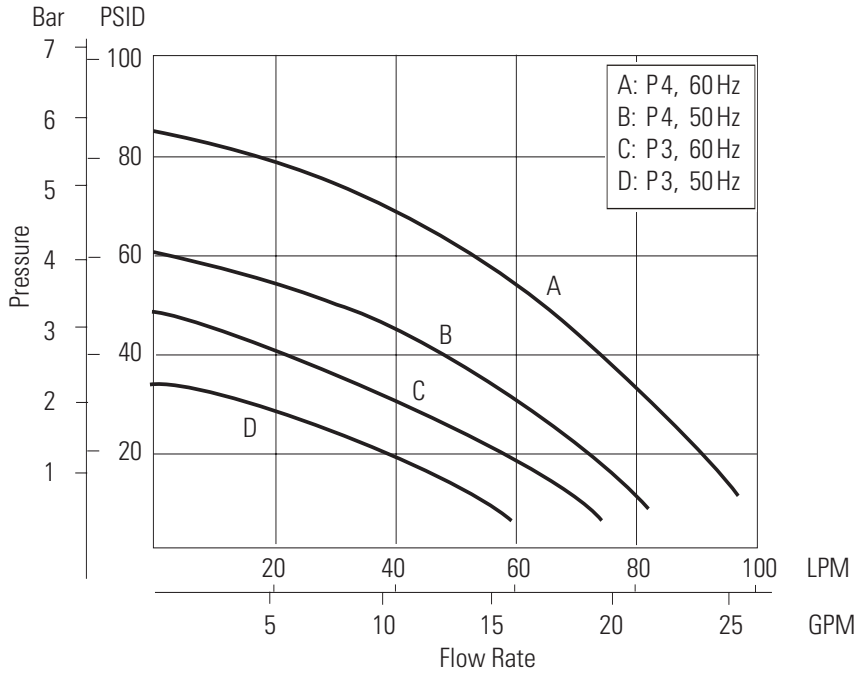

Pumping Capacity
Centrifugal Pump P5

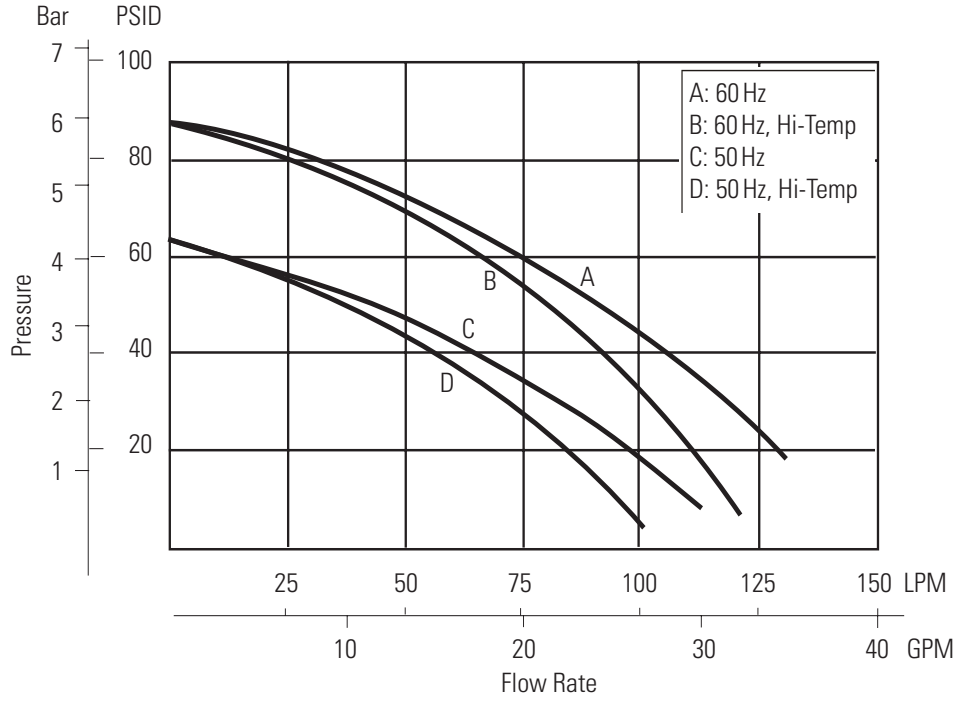

- Pump curves are nominal values. Pressure values for centrifugal pumps are differential pressures between the inlet and the outlet of the chiller.
- Pump performance results were obtained with no restrictions on the return to the system or with any options installed. For example, utilizing the DI option will result in a 0.5 gpm flow reduction.
- Specifications obtained at sea level using water as the recirculating fluid, at a 20°C process setpoint, 25°C ambient condition, at nominal operating voltage. Other fluids, fluid temperatures, ambient temperatures, altitude or operating voltages will affect performance. See Section 3.
- Thermo Fisher Scientific reserves the right to change specifications without notice.

Pumping Capacity Turbine Pump T0

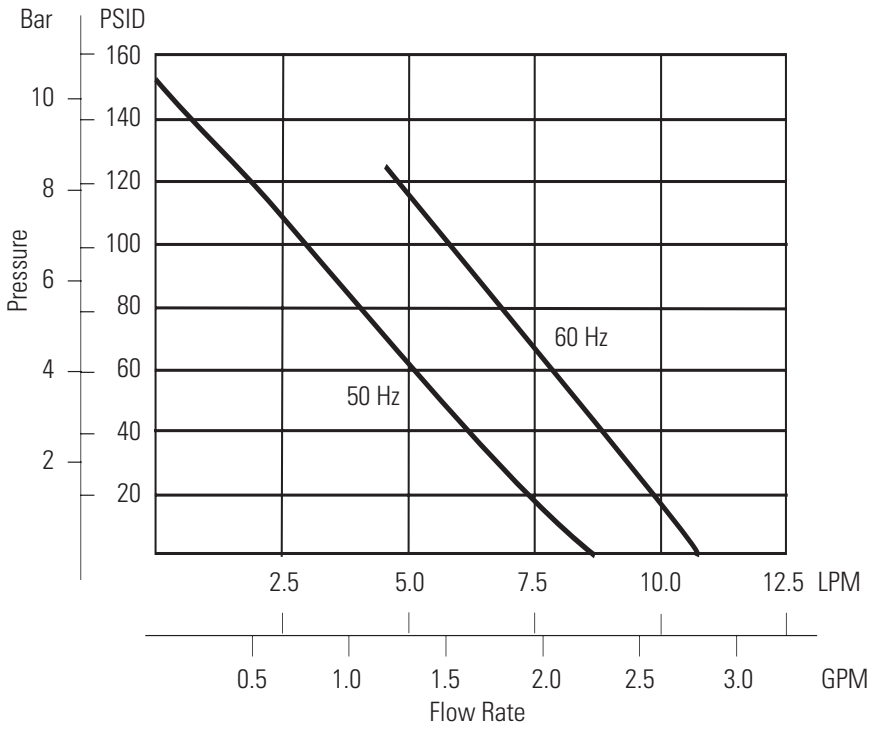

- Pump curves are nominal values. Pressure values for turbine pumps are differential pressures between the inlet and the outlet of the chiller.
- Pump performance results were obtained with no restrictions on the return to the system or with any options installed. For example, utilizing the DI option will result in a 0.5 gpm flow reduction .
- Specifications obtained at sea level using water as the recirculating fluid, at a 20°C process setpoint, 25°C ambient condition, at nominal operating voltage. Other fluids, fluid temperatures, ambient temperatures, altitude or operating voltages will affect performance. See Section 3.
- Thermo Fisher Scientific reserves the right to change specifications without notice.

ThermoFlex900/1400
Dimensions
(inches/centimeters)

Front View

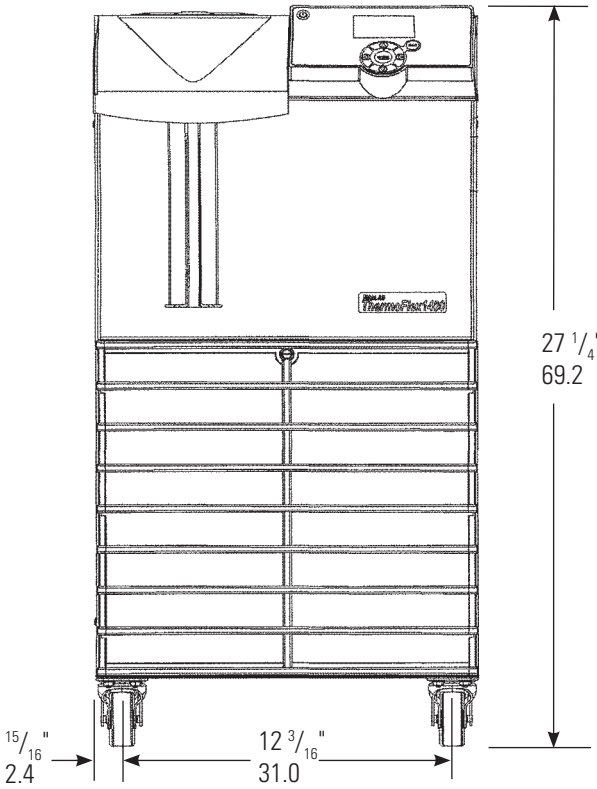

* Add 1/8" (3 mm) for SEMI chillers , see Section 5.

Side View

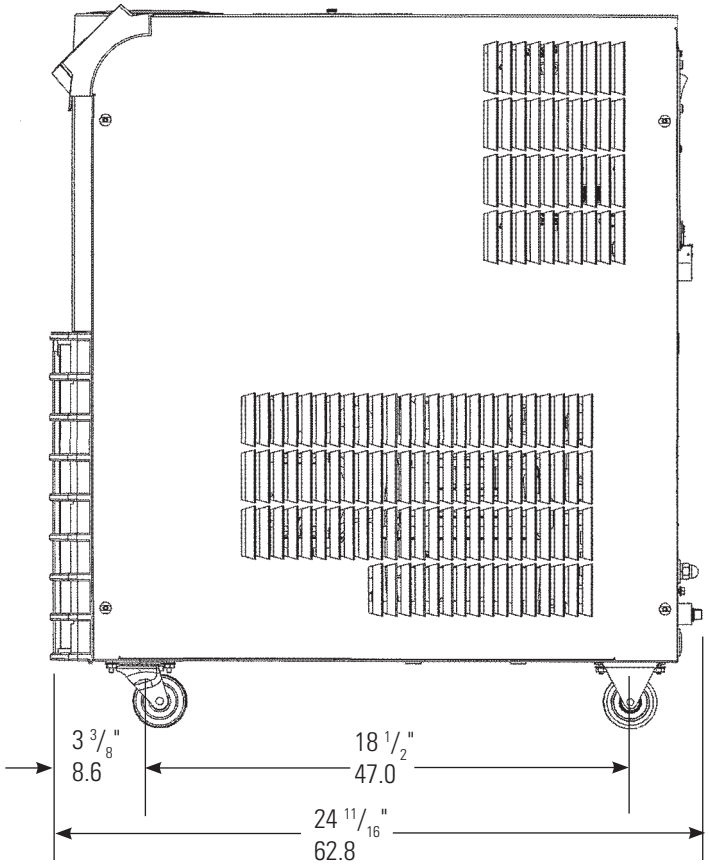

ThermoFlex900/1400

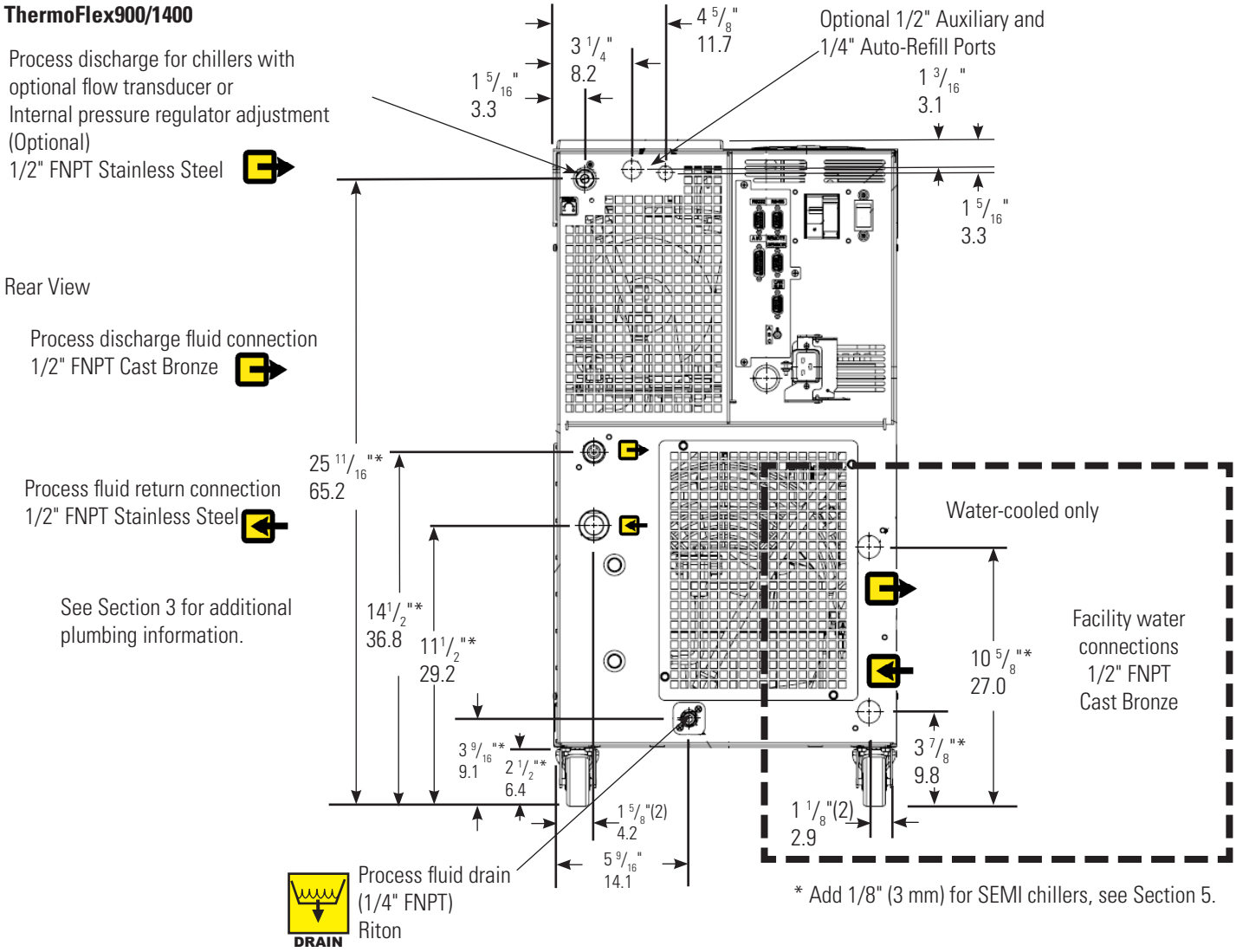

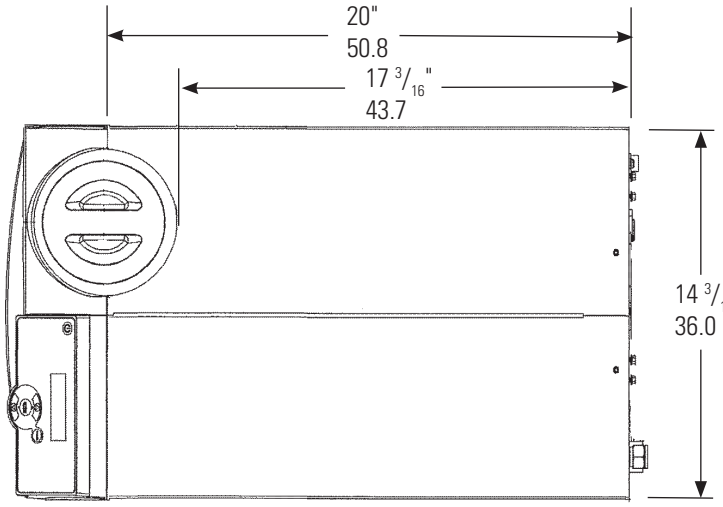

Top View

Shipping crate dimensions (approximate):

21" (53 cm) wide

35" (89 cm) tall

40" (102 cm) deep

- Thermo Fisher Scientific reserves the right to change specifications without notice.

ThermoFlex2500
Dimensions
(inches/centimeters)

Front View

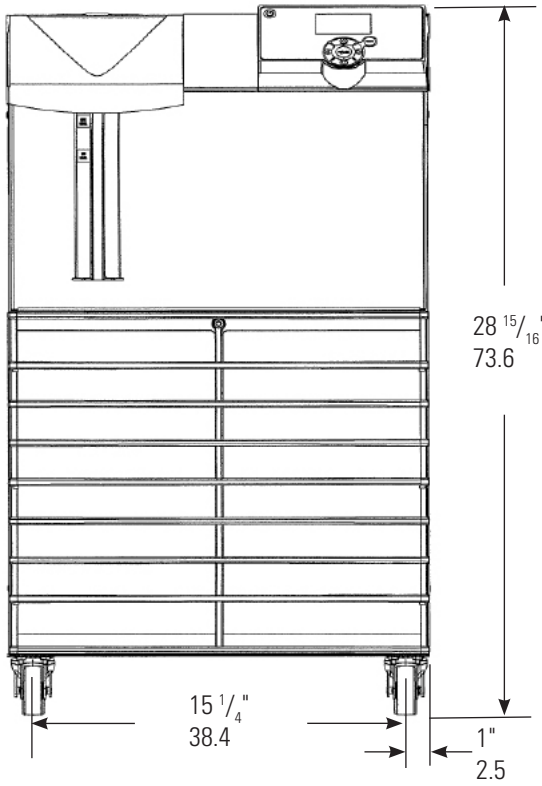

* Add 1/8" (3 mm) for SEMI chillers , see Section 5.

Side View

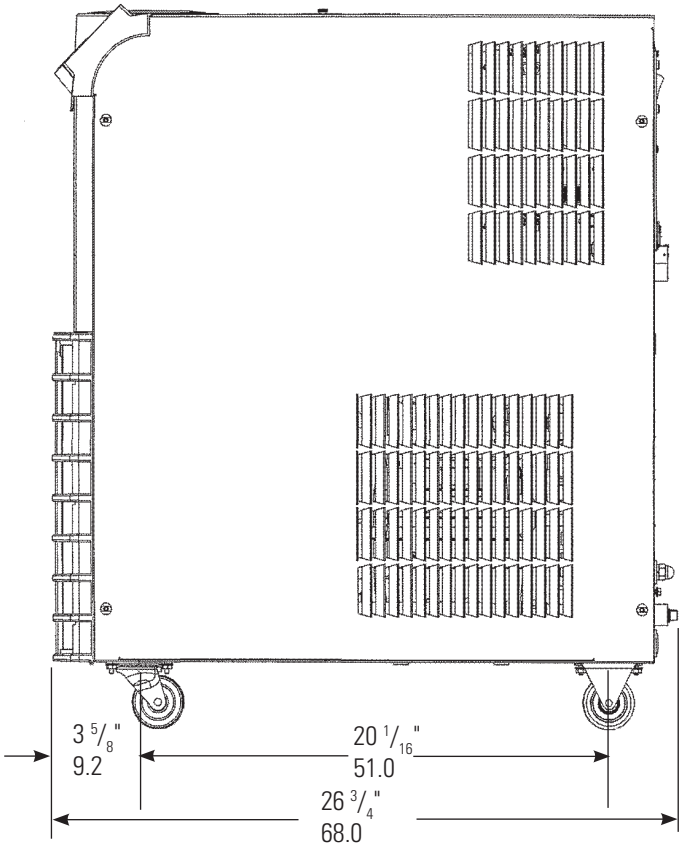

ThermoFlex2500

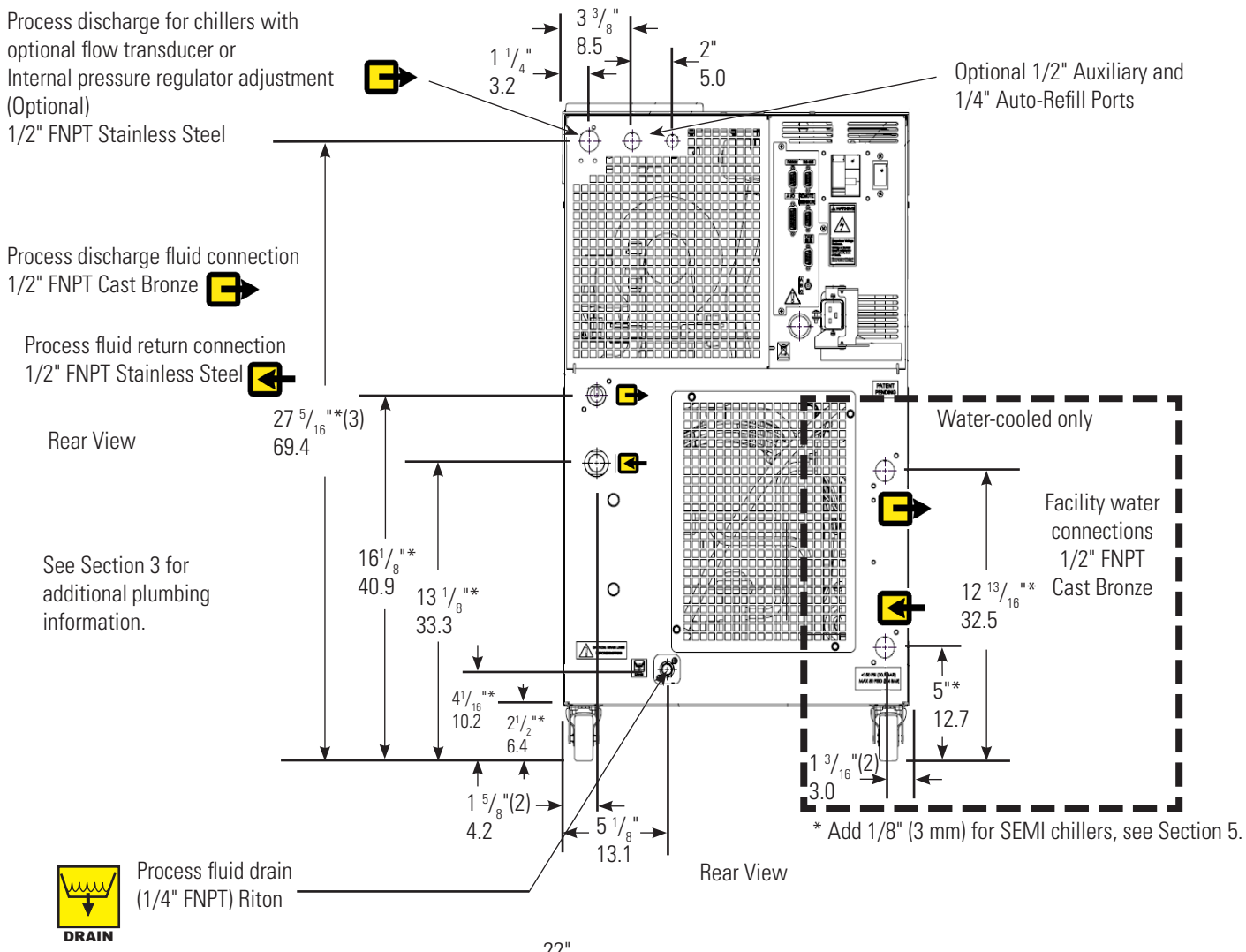

- Thermo Fisher Scientific reserves the right to change specifications without notice.

ThermoFlex3500/5000
Dimensions
(inches/centimeters)

Front View

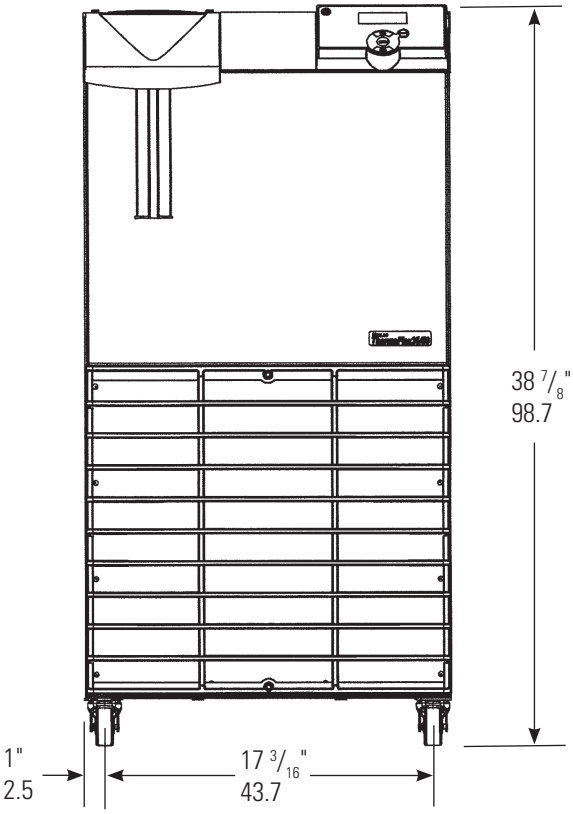

* Add 1/8" (3 mm) for SEMI chillers, see Section 5.

Side View

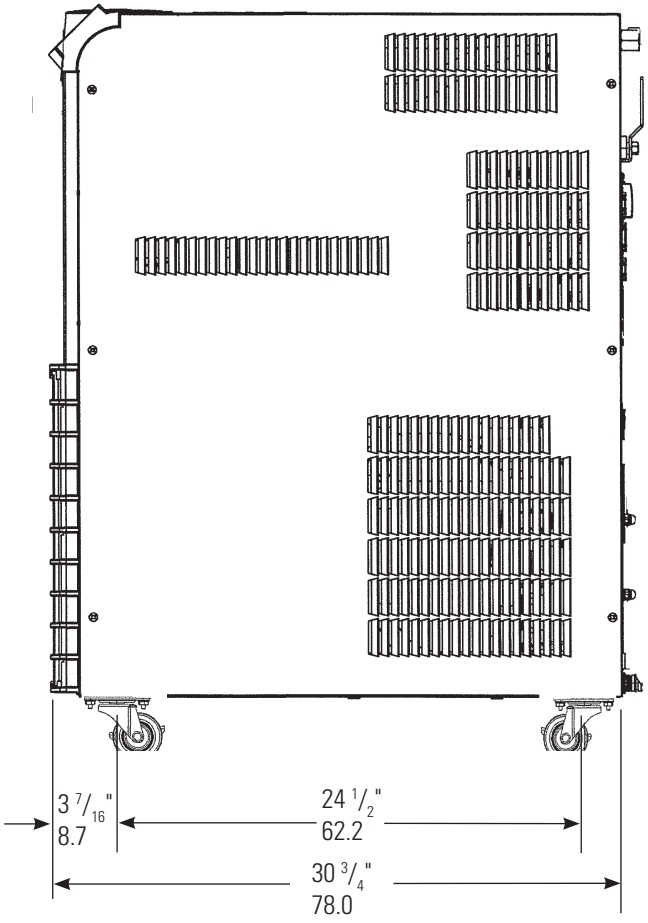

ThermoFlex3500/5000

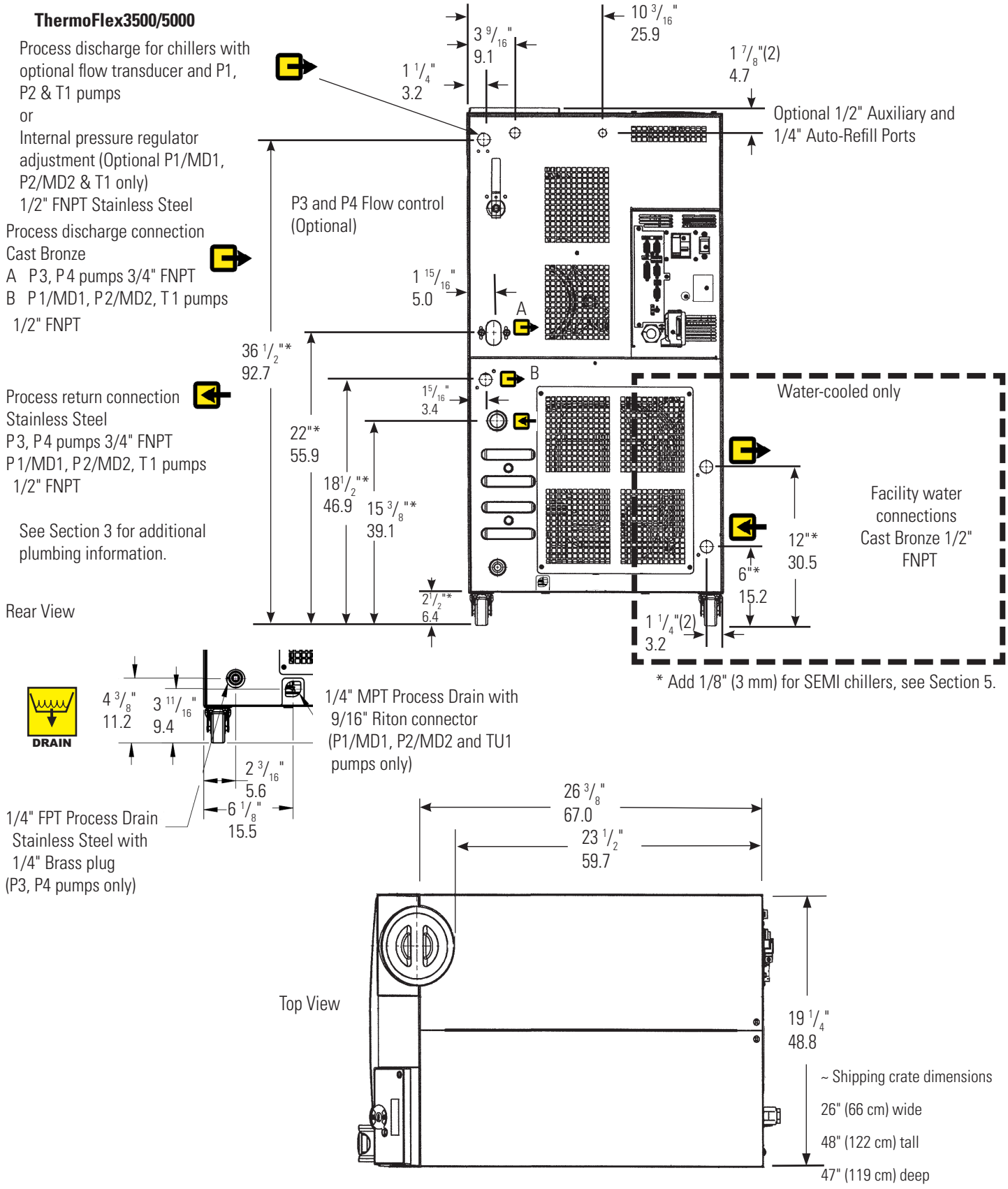

- Thermo Fisher Scientific reserves the right to change specifications without notice.

ThermoFlex7500/10000
Dimensions
(inches/centimeters)

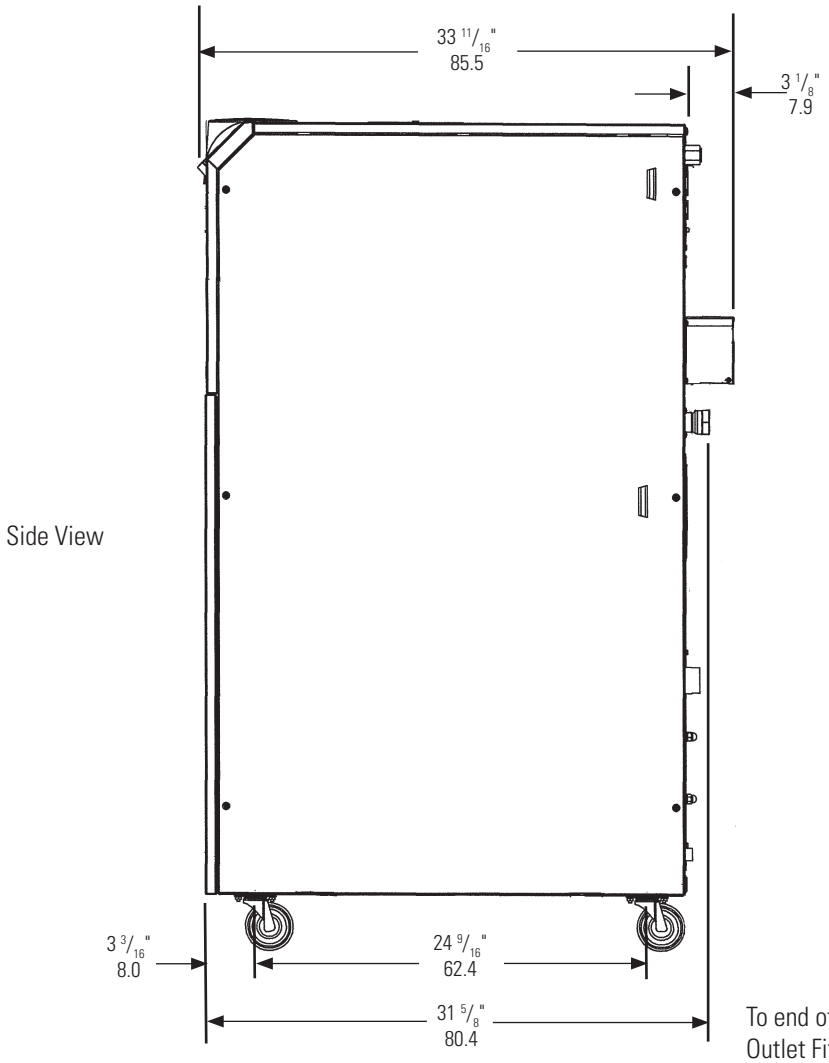

Side View

To end of P3 - P5
Outlet Fitting

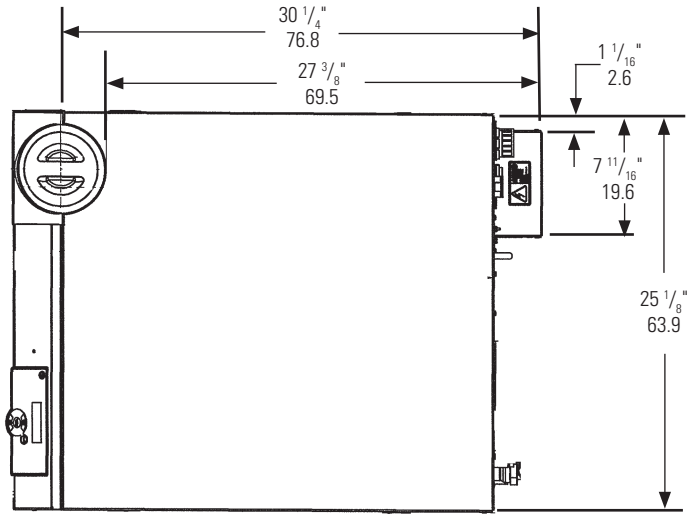

Top View

Air-cooled shipping crate dimensions (approximate):

35 3/4" (91 cm) wide

61 1/2" (156 cm) tall

46 3/8" (118 cm) deep

Water-cooled shipping crate dimensions (approximate):

35 3/4" (91 cm) wide

55 1/2" (141 cm) tall

46 3/8" (118 cm) deep

- Thermo Fisher Scientific reserves the right to change specifications without notice.

ThermoFlex7500/10000

Rear View
(Air-Cooled)

Process Discharge

P2/MD2 = 1/2" FNPT
Cast Bronze

P3 - P5 , T5= 1" FNPT
Wrought Copper

Process Return
Stainless Steel
P2/MD2 = 1/2" FNPT
P3 - P5, T5 = 1" FNPT

See Section 3 for additional plumbing information.

Process fluid drain (1/4" FNPT)
Stainless Steel with Brass plug or a Riton connector

DRAIN

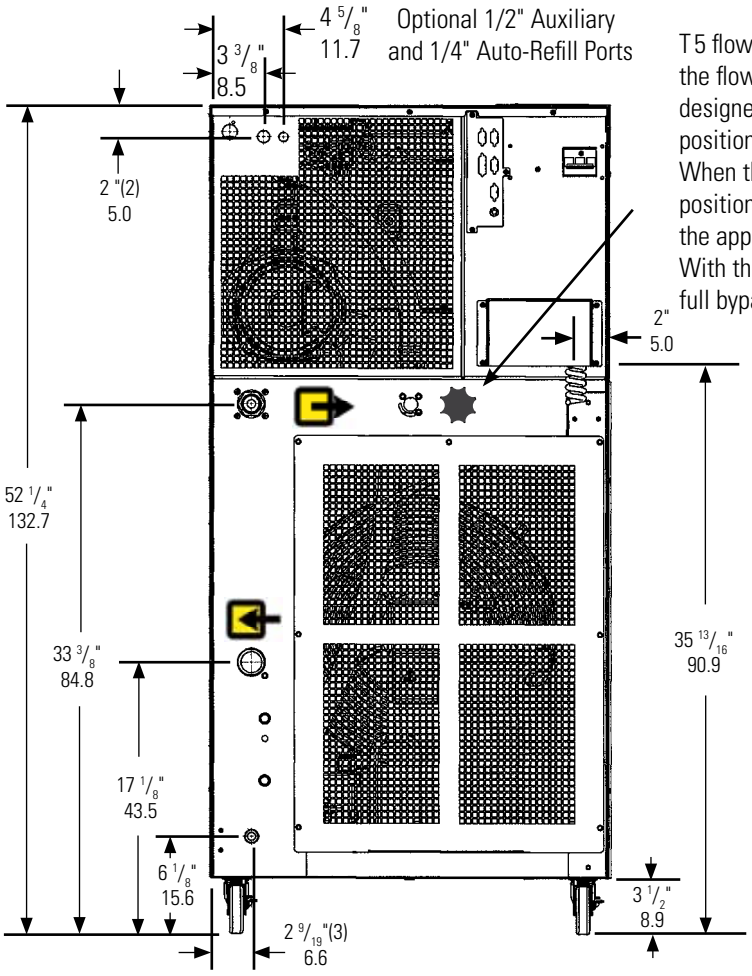

T5 flow control valve is used to adjust the flow rate. The valve's handle is designed with slots to identify the valve's position, from full flow to full bypass. When the slots are in the horizontal position (in line with the discharge line) the application is receiving full flow. With the slots are vertical the valve is in full bypass.



Full Flow Full Bypass

Rear View
(Water-Cooled)

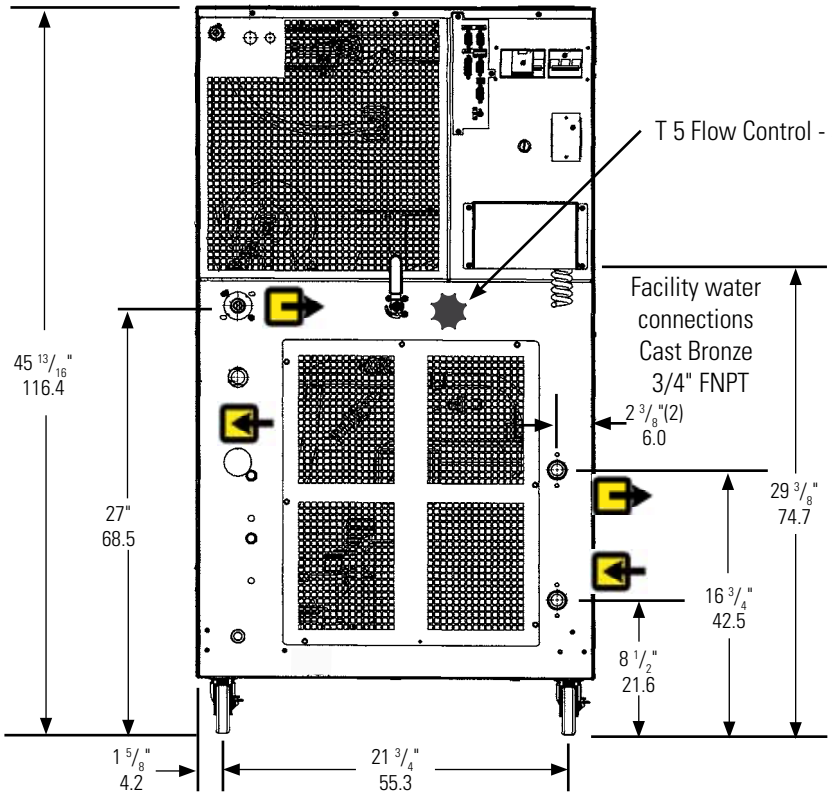

Section 3 Installation

Site Requirements

Ambient Temperature Range*	10°C to 40°C (50°F to 104°F)
Relative Humidity Range	10% to 80% (non-condensing)
Operating Altitude*	Sea Level to 8000 feet (2438 meters)
Overvoltage Category	II
Pollution Degree	2
Degree of Protection	IP 20

*Because of the decrease in air density, maximum temperature for the air entering an air-cooled ThermoFlex is reduced by 1°C per 1,000 feet above sea level. In addition, cooling capacity is reduced 1.2% per 1,000 feet above sea level.

⚠ CAUTION

Never place the chiller in a location where excessive heat, moisture, inadequate ventilation, or corrosive materials are present. ▲

Note Refer to the nameplate information on the rear of the chiller. ▲

Air-cooled chillers retain their full rated capacity at 20°C setpoint in ambient temperatures up to 25°C (77°F). For ambient temperatures above 25°C please de-rate the cooling capacity 3% for every 1°C above 25°C (77°F), up to a maximum ambient temperature of 40°C (104°F). Note that when operating at a process temperature lower than 20°C the de-rate percentage may increase due to additional gains from losses to ambient.

Note Depending on the setpoint and ambient temperatures, there may be a heat gain or loss through the plumbing resulting in a variation from setpoint temperature at the application inlet. Applications with large temperature variations between ambient and setpoint temperatures, and/or long plumbing lengths, may require additional insulation. ▲

ThermoFlex2500 air-cooled chillers are equipped with a two-speed fan. Should the chiller's internal ambient temperature reach 50°C for 30 seconds, or reach 53°C, the fan speed switches from slow speed to high speed to maintain internal temperatures within acceptable limits. When the temperature reaches 44°C or below for at least 15 minutes the speed returns to low. When in high speed the chiller's decibel level increases significantly.

Note High speed is required for the chiller to achieve its 2500 watt cooling capacity. At high-end operating conditions the fan can be set to run at high speed all the time using the controller's **SETTINGS** display, see Section 4. ▲

Chillers installed below the end-user application may enable system fluid to drain back into the chiller and cause spillage. Thermo Fisher offers an anti-drainback kit to prevent any spillage, see Section 5.

Air-cooled chillers can be installed with both sides blocked, or one side and the rear. See Figure 3-1. The front needs a minimum clearance of 24". Air enters the front of the system and exits through the sides and rear.

Having two sides blocked can impact the chiller's performance due to changes in air flow. If your installation requires two blocked sides please ensure that the following requirements are met:

Process Setpoint Temperature: Below 30°C (86°F)

Ambient: Below 40°C (104°F)

Before operating the chiller in conditions outside any of those listed in this manual please contact Thermo Fisher Scientific's Sales, Service and Customer Support to review your installation.

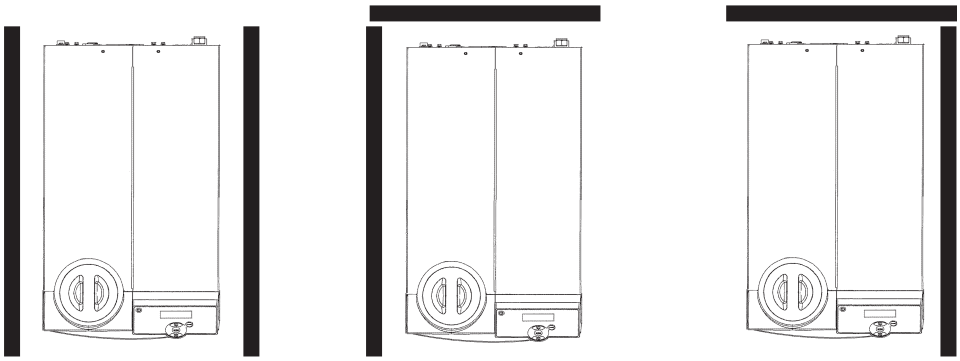

Figure 3-1 Minimum Clearance

Electrical Requirements

DANGER

The chiller's construction provides protection against the risk of electrical shock by grounding appropriate metal parts. The protection will not function unless the power cord is connected to a properly grounded outlet. It is the user's responsibility to assure a proper ground connection is provided. ▲

The chiller must be installed in accordance with the National Electrical Code and the with reference to the information on the chiller's nameplate located on the rear.

Locate the chiller so it is near, and has easy access to, its disconnecting device.

The user is responsible to ensure that the line cord provided meets local electrical codes. If not, contact qualified installation personnel.

The chiller is intended for use on a dedicated outlet. The ThermoFlex has an internal circuit protection that is equivalent (approximately) to the branch circuit rating. This is to protect the ThermoFlex, and is not intended as a substitute for branch circuit protection.

Electrical Service Requirements (Standard temperature chillers):

ThermoFlex900	Voltage ±10%	Frequency	Phase	Branch Circuit Requirements	Line Cord Plug
	100 VAC	50 Hz	1Ø	15A	5-15P
	115 VAC	60 Hz	1Ø	15A	5-15P
	200 VAC	50 Hz	1Ø	15A	6-15P
	208-230 VAC	60 Hz	1Ø	15A	6-15P
	230 VAC	50 Hz	1Ø	*16A[1], 15A[2], 13A[3]	-

ThermoFlex1400	Voltage ±10%	Frequency	Phase	Branch Circuit Requirements	Line Cord Plug
	100 VAC	50 Hz	1Ø	20A	5-20P
	115 VAC	60 Hz	1Ø	20A	5-20P
	200 VAC	50 Hz	1Ø	15A	6-15P
	208-230 VAC	60 Hz	1Ø	15A	6-15P
	230 VAC	50 Hz	1Ø	*16A[1], 15A[2], 13A[3]	-

ThermoFlex2500	Voltage ±10%	Frequency	Phase	Branch Circuit Requirements	Line Cord Plug
	200 VAC P 1, P 2 Pump	50 Hz	1Ø	15A	6-15P
	208-230 VAC P 1, P 2 Pump	60 Hz	1Ø	15A	6-15P
	200 VAC T 1 Pump	50 Hz	1Ø	20A	6-20P
	208-230 VAC T 1 Pump	60 Hz	1Ø	20A	6-20P
	230 VAC	50 Hz	1Ø	*16A[1], 15A[2], 13A[3]	-

* Refer to Appendix A for country specific ratings.

Continued on next page.

Electrical Service Requirements (Standard temperature chillers):

ThermoFlex3500/5000	Voltage ±10%	Frequency	Phase	Branch Circuit Requirements	Line Cord Plug
	200 VAC P 1, P 2 Pump	50 Hz	1Ø	15A	6-15P
	200 VAC T 1, P 3 Pump	50 Hz	1Ø	20A	6-20P
	200 VAC P 4 Pump	50 Hz	1Ø	30A	6-30P
	208-230 VAC P 1, P 2 Pump	60 Hz	1Ø	15A	6-15P
	208-230 VAC T 1, P 3 Pump	60 Hz	1Ø	20A	6-20P
	208-230 VAC P 4 Pump	60 Hz	1Ø	30A	6-30P
	230 VAC P 1 - P 4 Pump	50 Hz	1Ø	*16A[1], 15A[2], 13A[3]	-

ThermoFlex7500/10000 (Air-cooled)	Voltage ±10%	Frequency	Phase	MCA	MOPD	Line Cord Plug
	200 VAC P 2 Pump	50 Hz	3Ø	16.5	30	L15-20P
	200 VAC P 3 Pump	50 Hz	3Ø	18.7	30	L15-30P
	200 VAC P 5 Pump	50 Hz	3Ø	22.3	35	L15-30P
	200 VAC T 5 Pump	50 Hz	3Ø	17.3	30	L15-20P
	208-230 VAC P 2 Pump	60 Hz	3Ø	16.5	30	L15-20P
	208-230 VAC P 3 Pump	60 Hz	3Ø	18.7	30	L15-30P
	208-230 VAC P 5 Pump	60 Hz	3Ø	22.3	35	L15-30P
	208-230 VAC T 5 Pump	60 Hz	3Ø	17.3	30	L15-20P
	400 VAC P 2 Pump	50 Hz	3Ø	10.9	20	IEC309
	400 VAC P 3 Pump	50 Hz	3Ø	9.6	15	IEC309
	400 VAC P 5 Pump	50 Hz	3Ø	11.8	15	IEC309
	400 VAC T 5 Pump	50 Hz	3Ø	8.7	15	IEC309

ThermoFlex7500/10000 (Water-cooled)	Voltage ±10%	Frequency	Phase	MCA	MOPD	Line Cord Plug
	200 VAC P 2 Pump	50 Hz	3Ø	16.2	30	L15-20P
	200 VAC P 3 Pump	50 Hz	3Ø	18.4	30	L15-30P
	200 VAC P 5 Pump	50 Hz	3Ø	22.0	35	L15-30P
	200 VAC T 5 Pump	50 Hz	3Ø	17.0	30	L15-20P
	208-230 VAC P 2 Pump	60 Hz	3Ø	16.2	30	L15-20P
	208-230 VAC P 3 Pump	60 Hz	3Ø	18.4	30	L15-30P
	208-230 VAC P 5 Pump	60 Hz	3Ø	22.0	35	L15-30P
	208-230 VAC T 5 Pump	60 Hz	3Ø	17.0	30	L15-20P
	400 VAC P 2 Pump	50 Hz	3Ø	10.6	20	IEC309
	400 VAC P 3 Pump	50 Hz	3Ø	9.3	15	IEC309
	400 VAC P 5 Pump	50 Hz	3Ø	11.5	20	IEC309
	400 VAC T 5 Pump	50 Hz	3Ø	8.4	15	IEC309

MCA = Minimum Current Ampacity

MOPD = Maximum Overcurrent Protective Device

Values reflect those on the nameplate located on the rear of the chiller.

Continued on next page.

Electrical Service Requirements (Variable voltage chillers):

ThermoFlex900	Voltage ±10%	Frequency	Phase	Branch Circuit Requirements	Line Cord Plug
	115 VAC	60 Hz	1Ø	15A	5-15P*
	100 VAC	50/60 Hz	1Ø	15A	5-15P*

ThermoFlex1400	Voltage ±10%	Frequency	Phase	Branch Circuit Requirements	Line Cord Plug
	115 VAC	60 Hz	1Ø	20A	-
	100 VAC	50/60 Hz	1Ø	20A	-

* United States and Japan only. All other plugs are country specific.

Electrical Service Requirements (Global voltage chillers):

ThermoFlex900	Voltage ±10%	Frequency	Phase	Branch Circuit Requirements	Line Cord Plug
	200/208/230 VAC	60 Hz	1Ø	15A	-
	200/230 VAC	50 Hz	1Ø	**16A[1], 15A[2], 13A[3]	-

ThermoFlex1400	Voltage ±10%	Frequency	Phase	Branch Circuit Requirements	Line Cord Plug
	200/208/230 VAC	60 Hz	1Ø	15A	-
	200/230 VAC	50 Hz	1Ø	**16A[1], 15A[2], 13A[3]	-

ThermoFlex2500	Voltage ±10%	Frequency	Phase	Branch Circuit Requirements	Line Cord Plug
	200 VAC T 1 Pump	60 Hz	1Ø	15A	-
	208-230 VAC T 1 Pump	60 Hz	1Ø	20A	-
	230 VAC	50 Hz	1Ø	*16A[1], 15A[2], 13A[3]	-

ThermoFlex3500/5000	Voltage ±10%	Frequency	Phase	Branch Circuit Requirements	Line Cord Plug
	200/208-230 VAC P 1 P 3 Pump	50/60 Hz	1Ø	15A	-
	200/208-230 VAC T 1 P 3 Pump	50/60 Hz	1Ø	20A	-
	200/208-230 VAC P 4 Pump	50/60 Hz	1Ø	30A	Hard wired

** Chillers selected for 230 VAC operation have a range of -10% to +7%. Refer to Appendix A for country specific ratings.

For installation information on Variable Voltage and Global Voltage chillers refer to Appendix B. Refer to the nameplate label located on the rear of the chiller for specific electrical requirements.

Continued on next page.

Electrical Service Requirements (Global voltage chillers):

ThermoFlex7500/10000 (Air-cooled)	Voltage ±10%	Frequency	Phase	MCA	MOPD	Line Cord Plug
	400 VAC P 2 Pump	50 Hz	3Ø	8.8	15	Hard wire
	400 VAC P 3 Pump	50 Hz	3Ø	10.1	20	Hard wire
	400 VAC P 5 Pump	50 Hz	3Ø	12.3	20	Hard wire
	400 VAC T 5 Pump	50 Hz	3Ø	9.1	15	Hard wire
	460 VAC P 2 Pump	60 Hz	3Ø	8.8	15	Hard wire
	460 VAC P 3 Pump	60 Hz	3Ø	10.1	20	Hard wire
	460 VAC P 5 Pump	60 Hz	3Ø	12.3	20	Hard wire
	460 VAC T 5 Pump	60 Hz	3Ø	9.1	15	Hard wire

ThermoFlex7500/10000 (Water-cooled)	Voltage ±10%	Frequency	Phase	MCA	MOPD	Line Cord Plug
	400 VAC P 2 Pump	50 Hz	3Ø	8.4	15	Hard wire
	400 VAC P 3 Pump	50 Hz	3Ø	9.7	20	Hard wire
	400 VAC P 5 Pump	50 Hz	3Ø	11.9	20	Hard wire
	400 VAC T 5 Pump	50 Hz	3Ø	8.8	15	Hard wire
	460 VAC P 2 Pump	60 Hz	3Ø	8.4	15	Hard wire
	460 VAC P 3 Pump	60 Hz	3Ø	9.7	20	Hard wire
	460 VAC P 5 Pump	60 Hz	3Ø	11.6	20	Hard wire
	460 VAC T 5 Pump	60 Hz	3Ø	8.8	15	Hard wire

Electrical Service Requirements (High temperature chillers):

ThermoFlex1400	Voltage ±10%	Frequency	Phase	Branch Circuit Requirements	Line Cord Plug
	200 VAC 1KW	50 Hz	1Ø	20A	6-20P
	200-230 VAC 1KW	60 Hz	1Ø	20A	6-20P
	200 VAC 2KW	50 Hz	1Ø	30A	6-30P
	208-230 VAC 2KW	60 Hz	1Ø	30A	6-30P
	230 VAC 2KW	50 Hz	1Ø	32A	-
	230 VAC 1KW	50 Hz	1Ø	*16A[1], 15A[2], 13A[3]	-

ThermoFlex2500	Voltage ±10%	Frequency	Phase	Branch Circuit Requirements	Line Cord Plug
	200 VAC P 1 P 2 Pump	50 Hz	1Ø	30A	6-30P
	208-230 VAC P 1 P 2 Pump	60 Hz	1Ø	30A	6-30P
	200 VAC T 1 Pump	50 Hz	1Ø	40A	Hard wire
	208-230 VAC T 1 Pump	60 Hz	1Ø	40A	Hard wire
	230 VAC	50 Hz	1Ø	32A	-

* Refer to Appendix A for country specific ratings.

Continued on next page.

Electrical Service Requirements (High temperature chillers):

ThermoFlex3500/5000	Voltage ±10%	Frequency	Phase	Branch Circuit Requirements	Line Cord Plug
	200 VAC P 1 P 2 Pump	50 Hz	1Ø	30A	6-30P
	200 VAC T 1 P 3 P 4 Pump	50 Hz	1Ø	40A	Hard wire
	208-230 VAC P 1 P 2 Pump	60 Hz	1Ø	30A	6-30P
	208-230 VAC T 1 P 3 P 4 Pump	60 Hz	1Ø	40A	Hard wire
	230 VAC P 1- P 4, T1 Pump	50 Hz	1Ø	32A	IEC309

ThermoFlex7500/10000 (Air-cooled)	Voltage ±10%	Frequency	Phase	MCA	MOPD	Line Cord Plug
	200 VAC P 2 Pump	50 Hz	3Ø	35.7	45	Hard wire
	200 VAC P 3 Pump	50 Hz	3Ø	37.9	45	Hard wire
	200 VAC P 5 Pump	50 Hz	3Ø	41.5	50	Hard wire
	200 VAC T 5 Pump	50 Hz	3Ø	36.4	45	Hard wire
	208-230 VAC P 2 Pump	60 Hz	3Ø	35.7	45	Hard wire
	208-230 VAC P 3 Pump	60 Hz	3Ø	37.9	45	Hard wire
	208-230 VAC P 5 Pump	60 Hz	3Ø	41.5	50	Hard wire
	208-230 VAC T 5 Pump	60 Hz	3Ø	36.4	45	Hard wire
	400 VAC P 2 Pump	50 Hz	3Ø	19.2	25	Hard wire
	400 VAC P 3 Pump	50 Hz	3Ø	17.9	25	Hard wire
	400 VAC P 5 Pump	50 Hz	3Ø	20.1	25	Hard wire
	400 VAC T 5 Pump	50 Hz	3Ø	17.0	25	Hard wire

ThermoFlex7500/10000 (Water-cooled)	Voltage ±10%	Frequency	Phase	MCA	MOPD	Line Cord Plug
	200 VAC P 2 Pump	50 Hz	3Ø	35.3	45	L15-20P
	200 VAC P 3 Pump	50 Hz	3Ø	37.5	45	L15-20P
	200 VAC P 5 Pump	50 Hz	3Ø	41.1	50	L15-30P
	200 VAC T 5 Pump	50 Hz	3Ø	36.1	45	L15-30P
	208-230 VAC P 2 Pump	60 Hz	3Ø	35.3	45	L15-20P
	208-230 VAC P 3 Pump	60 Hz	3Ø	37.5	45	L15-20P
	208-230 VAC P 5 Pump	60 Hz	3Ø	41.1	50	L15-30P
	208-230 VAC T 5 Pump	60 Hz	3Ø	361	45	L15-30P
	400 VAC P 2 Pump	50 Hz	3Ø	18.8	25	IEC309
	400 VAC P 3 Pump	50 Hz	3Ø	17.5	25	IEC309
	400 VAC P 5Pump	50 Hz	3Ø	19.7	25	IEC309
	400 VAC T 5 Pump	50 Hz	3Ø	16.7	25	IEC309

MCA = Minimum Current Ampacity

MOPD = Maximum Overcurrent Protective Device

Values reflect those on the nameplate located on the rear of the chiller.

Continued on next page.

Electrical Service Requirements (High temperature global voltage chillers):

ThermoFlex1400	Voltage ±10%	Frequency	Phase	Branch Circuit Requirements	Line Cord Plug
	200/208/230 VAC 1KW	60 Hz	1Ø	20A	6-20P
	200/208/230 VAC 2KW	60 Hz	1Ø	30A	Hard wire
	200/230 VAC 2KW	50 Hz	1Ø	32A	Hard wire
	200/230 VAC 1KW	50 Hz	1Ø	**16A[1], 15A[2], 13A[3]	Hard wire

ThermoFlex2500	Voltage ±10%	Frequency	Phase	Branch Circuit Requirements	Line Cord Plug
	200/208/230 VAC P1 P2 Pump	60 Hz	1Ø	30A	Hard wire
	200/208/230 VAC T1 Pump	60 Hz	1Ø	40A	Hard wire
	200/230 VAC	50 Hz	1Ø	32A	Hard wire

ThermoFlex3500/5000	Voltage ±10%	Frequency	Phase	Branch Circuit Requirements	Line Cord Plug
	200/208-230 VAC P1 P2 Pump	50/60 Hz	1Ø	30, 32A	Hard wire
	200/208-230 VAC T1 P3 P4 Pump	50/60 Hz	1Ø	32, 40A	Hard wire

ThermoFlex7500/10000 (Air-cooled)	Voltage ±10%	Frequency	Phase	MCA	MOPD	Line Cord Plug
	400 VAC P2 Pump	50 Hz	3Ø	18.3	25	Hard wire
	400 VAC P3 Pump	50 Hz	3Ø	19.6	25	Hard wire
	400 VAC P5 Pump	50 Hz	3Ø	21.8	30	Hard wire
	400 VAC T5 Pump	50 Hz	3Ø	18.7	25	Hard wire
	460 VAC P2 Pump	60 Hz	3Ø	18.3	25	Hard wire
	460 VAC P3 Pump	60 Hz	3Ø	19.6	25	Hard wire
	460 VAC P5 Pump	60 Hz	3Ø	21.8	30	Hard wire
	460 VAC T5 Pump	60 Hz	3Ø	18.7	25	Hard wire

ThermoFlex7500/10000 (Water-cooled)	Voltage ±10%	Frequency	Phase	MCA	MOPD	Line Cord Plug
	400 VAC P2 Pump	50 Hz	3Ø	18.0	25	Hard wire
	400 VAC P3 Pump	50 Hz	3Ø	19.3	25	Hard wire
	400 VAC P5 Pump	50 Hz	3Ø	21.5	30	Hard wire
	400 VAC T5 Pump	50 Hz	3Ø	18.4	25	Hard wire
	460 VAC P2 Pump	60 Hz	3Ø	18.0	25	Hard wire
	460 VAC P3 Pump	60 Hz	3Ø	19.3	25	Hard wire
	460 VAC P5 Pump	60 Hz	3Ø	21.5	30	Hard wire
	460 VAC T5 Pump	60 Hz	3Ø	18.4	25	Hard wire

** Chillers selected for 230 VAC operation have a range of -10% to +7%. Refer to Appendix A for country specific ratings.

For installation information Global Voltage chillers refer to Appendix B.

Refer to the nameplate on the chiller's rear for specific electrical requirements.

Hard Wire Installation

WARNING

For personal safety and equipment reliability, only a qualified technician should perform the following procedure. ▲

Note The technician is responsible for installing circuit protection for incoming power. Before wiring consult the nameplate on the rear of the chiller. Ensure installation is in accordance with the National Electrical Code and any other applicable country and local codes. ▲

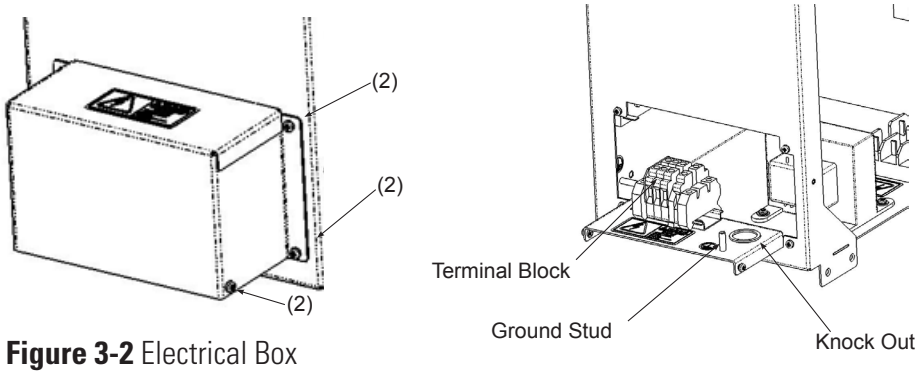

Figure 3-2 Electrical Box

- Remove the six screws securing the electrical box cover to the rear of the chiller.
- Remove the double knock out ($^{7}/_{8}$" and 1 $^{3}/_{32}$").
- Insert the cable through the hole.
- Refer to the label in the electrical box to configure your chiller, see Figure 3-3.
- Secure the cable's ground wire to the ground stud.
- Reinstall the cover.

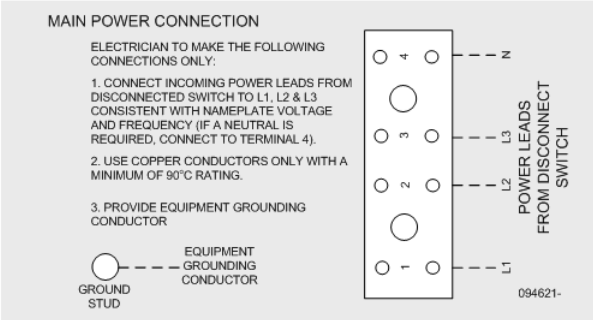

Figure 3-3 Sample Label

Plumbing Requirements

Ensure that all shipping plugs are removed before installation.

CAUTION

Never connect the process fluid lines to your facility water supply or any pressurized liquid source. ▲

CAUTION

To prevent damage to the chiller's plate exchanger, centrifugal pumps require a 4.0 gpm (15.1 lpm) minimum flow rate. ▲

CAUTION

P1 and P2 pumps are capable of producing 185 psig. Ensure your plumbing is rated to withstand this pressure at your operating temperature. An external pressure relief valve is available, see Section 5. ▲

Note Ensure your plumbing installation will develop a back pressure to the ThermoFlex greater than 3 PSIG. Lower pressure will shut down the chiller. ▲

The process fluid connections are located on the rear of the chiller and are labeled (PROCESS OUTLET) and (PROCESS INLET).

Process Fluid Connections (FNPT)

Outlet		
ThermoFlex900 - 10000	P1 P2 T0 T1	1/2" cast bronze
ThermoFlex3500 - 5000	P3 P4	3/4" cast bronze
ThermoFlex7500 - 10000	P3 P5 T5	1" wrought copper
Inlet - Same size as outlet		all chillers stainless steel

Supplied Adapters Standard Temperature Chillers

P1 P2 T0 T1	1/2" x 3/8" Polyethylene and 1/2" x 1/2" Nylon
P3 P4	3/4 MPT x 1/2 barb PVC
P3 P5 T5	1" MPT x 1" barb PVC and 1" MPT x 3/4" barb PVC

The supplied adapters for high temperature chillers are brass.

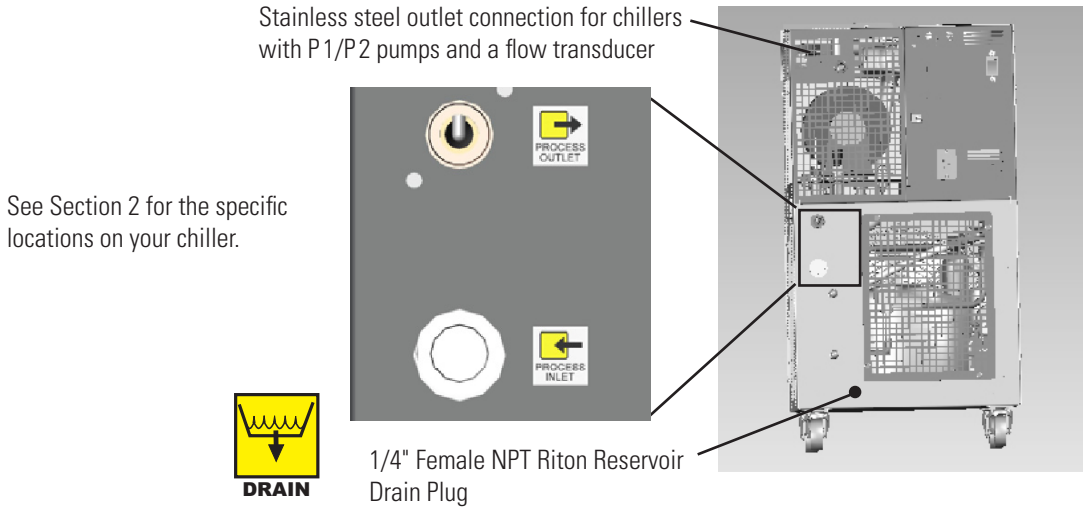

Figure 3-4 Typical Plumbing Connections (1 of 2)

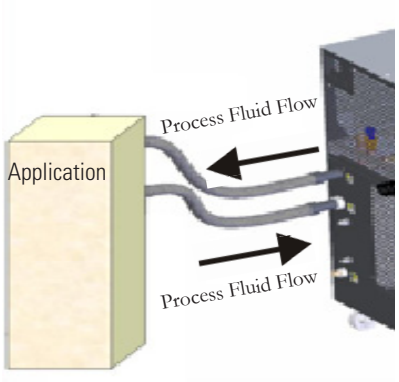

Figure 3-4 Typical Plumbing Connections (2 of 2)

Connect the PROCESS OUTLET to the fluid inlet on your application. Connect the PROCESS INLET to the fluid outlet on your application. Ensure all connections are secure and that the proper sealant/lubricant for the fitting material is used. (If Teflon® tape is used, ensure the tape does not overhang the first thread as it could shred and get into the fluid.) Keep the distance between the chiller and the instrument being cooled as short as possible. Ensure tubing is straight and without bends. If diameter reductions are required, make them at the inlet and outlet of your application, not at the ThermoFlex.

Water-cooled Chillers

For water-cooled chillers the facility water plumbing connections are also located on the rear and are labeled FACILITY INLET and FACILITY OUTLET. The connections are ½" Female NPT for ThermoFlex900 - 5000, ¾" Female NPT for ThermoFlex7500 - 10000. Both connections for ThermoFlex900 to 10000 are cast bronze.

Connect the FACILITY INLET to your facility water supply. Connect the FACILITY OUTLET to your facility water return or drain. Ensure all connections are secure and that the proper sealant/lubricant for the fitting material is used. (If Teflon® tape is used, ensure the tape does not overhang the first thread as it could shred and get into the fluid.)

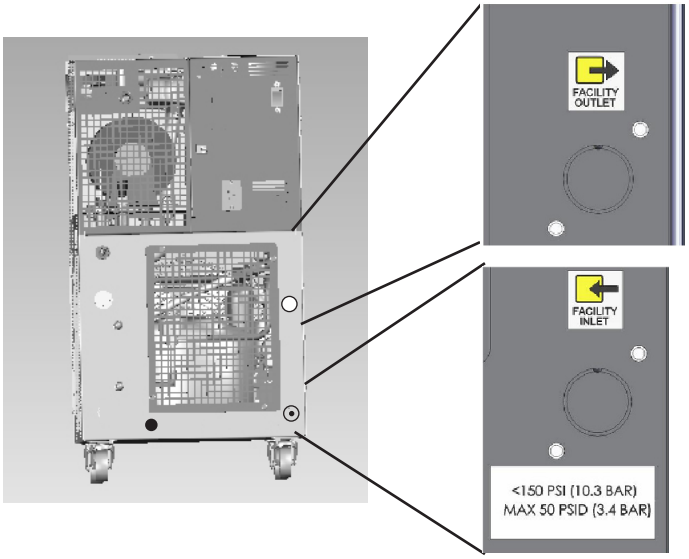

See Section 2 for the specific locations on your chiller.

Figure 3-5 Typical Plumbing Connections, Water-cooled Chillers

Process Fluid Requirements

WARNING

Use of any fluid not listed below will void the manufacturer's warranty. ▲

Standard Temp Chillers	High Temp Chillers
Filtered/Single Distilled water	Filtered water*
0 - 75% Laboratory Grade Ethylene Glycol/Water	0 - 50% Laboratory Grade Ethylene Glycol/Water*
0 - 75% Laboratory Grade Propylene Glycol/Water	0 - 50% Laboratory Grade Propylene Glycol/Water*
Deionized water (1 - 3 MΩ- cm, compensated)* *For applications requiring resistivity greater than 1 MΩ- cm please call and speak to an applications engineer for additional information.	*to 88°C for chillers with P1/P2 pumps, to 90°C for chillers with other pumps (when fluid properly maintained)

WARNING

Ethylene glycol (EG) is poisonous and flammable. Before using any fluid or performing maintenance where contact with the fluid is likely refer to the manufacturer's MSDS for handling precautions. ▲

CAUTION

EG is also hygroscopic, it absorbs water from its environment. This can affect the freezing point and boiling point of the fluid over time and may result in system failure. ▲

CAUTION

To prevent freezing/glazing of the plate exchanger, all ThermoFlex7500 and 10000s require the use of 50/50 EG/water or 50/50 PG/water below 10°C process temperature. ▲

CAUTION

When using a process fluid mixture of ethylene glycol and water or propylene glycol and water, check the fluid concentration and pH on a regular basis. Changes in concentration and pH can impact system performance. ▲

CAUTION

When using EG/water or PG/water, top-off with plain water. After top-off check the fluid concentration. ▲

CAUTION

Do not use a Deionization (DI) filter cartridge with Inhibited EG or Inhibited PG. A DI filter will remove inhibitors from the solution rendering the fluid ineffective against corrosion protection. Also, inhibitors increase fluid conductivity. ▲

Compatibility with Approved Fluids

Filtered Tap Water/Single Distilled Water

Filtered drinking water and single distilled water are good choices for use in a recirculating chiller because the filtering/distilling process used removes microorganisms that could create biological fouling as well as harmful particulates and excessive minerals that could cause harmful deposits and scaling.

Chlorine

Short term usage of tap water may not cause any adverse affects on the chiller or your application, but in the long term problems may arise. To help alleviate these problems Thermo Fisher Scientific recommends the use of chlorine.

The duration of time that chlorine remains in solution depends on factors such as water temperature, pH and availability of direct sunlight. We recommend maintaining chlorine levels at proper levels using chlorine test strips, generally 1 to 5 ppm is adequate.

For best results, maintain the pH of the fluid between 6.5 and 7.5. Do not add additional chlorine without first determining the concentration ratio that already exists in the fluid supply. Corrosion and degradation of the circulation components can result from concentration ratios that are too high. Contact our customer support for additional information.

Deionized Water

Deionized water is water that has had its mineral ions removed using ion exchange resins. The purpose of this process is to remove the ions that allow electrical current to flow more easily through water. This helps to prevent electrical leaks to ground through the recirculating fluid. Deionized water is classified by the electrical resistance of the water, usually measured in MΩ-cm, with pure water having a resistance of 18 MΩ-cm.

Deionized water is in an unbalanced state and will leach the missing ions from the materials it comes in contact with. The aggressive nature of this leaching can cause pitting on metal surfaces. Note that the deionizing process does not remove microorganisms. Because of this, we recommend deionized water only with applications that have it as a specified requirement.

In any case, only deionized water with a 1 - 3 MΩ-cm resistivity is approved for use in Thermo Fisher Scientific recirculating chillers. For applications requiring resistivity greater than 1 MΩ- cm please call and speak to an applications engineer for additional information.

Recommended Biocides and Inhibitors

Thermo Fisher Scientific offers a biocide and inhibitor package Thermo 200 (NALCO) premixed with 5 gallons of water or as a kit to be added to water. No other biocide or inhibitor is recommended for use in our chillers.



Biocides are corrosive and can cause irreversible eye damage and skin burns. They are harmful if inhaled, swallowed or absorbed through the skin. Refer to the manufacturer's most current MSDS. ▲

⚠ CAUTION

To prevent freezing/glazing of the plate exchanger, ThermoFlex7500 and 10000 chillers require the use of 50/50 EG/water or 50/50 PG/water below 10°C process temperature. ▲

Uninhibited Ethylene Glycol/Water

Ethylene glycol is used to depress the freezing point of water and should only be used at temperatures where freeze point suppression is required. Ethylene glycol does not improve heat transfer and is not recommended for use as a biocide. Because glycols lower the surface tension of water and do not evaporate as readily as water, they may cause visible weepage past the pump seals. If weepage cannot be tolerated use seal-less, magnetically driven pumps where available.

Uninhibited simply means that the glycol does not contain any additives to prevent corrosion. While uninhibited ethylene glycol is acceptable for use, the pH level must be closely monitored and the fluid may need to be replaced more often. Since all glycols produce acids in the presence of air and the fluid change the glycol if the pH falls below 8. Note that litmus paper will not work to test the pH of ethylene glycol/water.

Inhibited Ethylene Glycol/Water

Inhibited glycol can help protect the wetted metals within the cooling circuit from corrosion caused by poor water quality, ethylene glycol oxidation (low pH) and mixed metals (electrolysis). The inhibitor works by either leaving a barrier coating on metal surfaces to buffer them from the corrosive fluid or by creating an oxidized layer that protects the underlying metal (passivating).

Inhibited automotive glycols are never acceptable. They use either silicates or Organic Acid Technology (OAT) as the inhibitor and these components are not compatible with the polymers used in recirculating chillers including the pump seals and internal hoses.

Inhibitors may also accelerate pump seal wear and seal-less, use magnetically driven pumps where available.

Uninhibited Propylene Glycol/Water

Propylene glycol does not transfer heat as well as ethylene glycol, but can be used when freeze point suppression is required as well as lower toxicity.

Propylene glycol does not function as a biocide and the pH needs to be maintained the same as with ethylene glycol as it also produces acid when oxidized.

Inhibited Propylene Glycol/Water

Inhibited propylene glycol has the same properties as uninhibited propylene glycol and the same concerns as inhibited ethylene glycol.

Additional Fluid Information

When using the ThermoFlex chiller to circulate through aluminum, use a compatible corrosion inhibitor to prevent galvanic corrosion.

Ensure fluid viscosity is 50 cSt or less at the lowest temperature used.

Visible pump weepage may occur when compatible glycols, oils or other additives are used. Pump weepage is considered as a normal operating condition of mechanical seal pumps.

Process Water Quality and Standards

Process Fluid	Permissible (PPM)	Desirable (PPM)
Microbiologicals		
(algae, bacteria, fungi)	0	0
Inorganic Chemicals		
Calcium	<25	<0.6
Chloride	<25	<10
Copper	<1.3	<1.0
	0.020 ppm if fluid in contact with aluminum	
Iron	<0.3	<0.1
Lead	<0.015	0
Magnesium	<12	<0.1
Manganese	<0.05	<0.03
Nitrates\Nitrites	<10 as N	0
Potassium	<20	<0.3
Silicate	<25	<1.0
Sodium	<20	<0.3
Sulfate	<25	<1
Hardness	<17	<0.05
Total Dissolved Solids	<50	<10
Other Parameters		
pH	6.5-8.5	7-8
Resistivity	0.01*	0.05-0.1*

* MΩ-cm (compensated to 25°C)

Unfavorably high total ionized solids (TIS) can accelerate the rate of galvanic corrosion. These contaminants can function as electrolytes which increase the potential for galvanic cell corrosion and lead to localized corrosion such as pitting. Pitting may become so extensive that it causes a breach in the cooling system resulting in a refrigerant leak into the fluid system.

As an example, raw water in the United States averages 171 ppm (of NaCl). The recommended level for use in a water system is between 0.5 to 5.0 ppm (of NaCl).

Recommendation: Initially fill the reservoir with distilled or 1-3 MΩ-cm deionized water. (It is acceptable to have the fluid drop to the other levels over-time.) Do not use untreated tap water as the total ionized solids level may be too high. This will reduce the electrolytic potential of the water and prevent or reduce the galvanic corrosion observed.

Facility Water Quality and Standards (water-cooled chillers)

Facility Water	Permissible (PPM)	Desirable (PPM)
Microbiologicals		
(algae, bacteria, fungi)	0	0
Inorganic Chemicals		
Calcium	<40	<0.6
Chloride	<250	<25
Copper	<1.3	<1.0
	0.020 ppm if fluid in contact with aluminum	
Iron	<0.3	<0.1
Lead	<0.015	0
Magnesium	<12	<0.1
Manganese	<0.05	<0.03
Nitrates\Nitrites	<10 as N	0
Potassium	<20	<0.3
Silicate	<25	<1.0
Sodium	<20	<0.3
Sulfate	<250	<50
Hardness	<17	<0.05
Total Dissolved Solids	<50	<10

Note A corrosion inhibitor is recommended if mixed metals are in the facility water loop. ▲

Facility Water Requirements (water-cooled chillers)

CAUTION

Facility Water Maximum Inlet Pressure must not exceed 150 PSIG.

Facility Water Maximum Pressure Differential must not exceed 50 PSID.
(Pressure Differential = Inlet Pressure - Outlet Pressure)

Contact us before using facility water that is above 35°C.

The facility water must meet the following conditions for the chillers to maintain their full rated capacity.

ThermoFlex1400

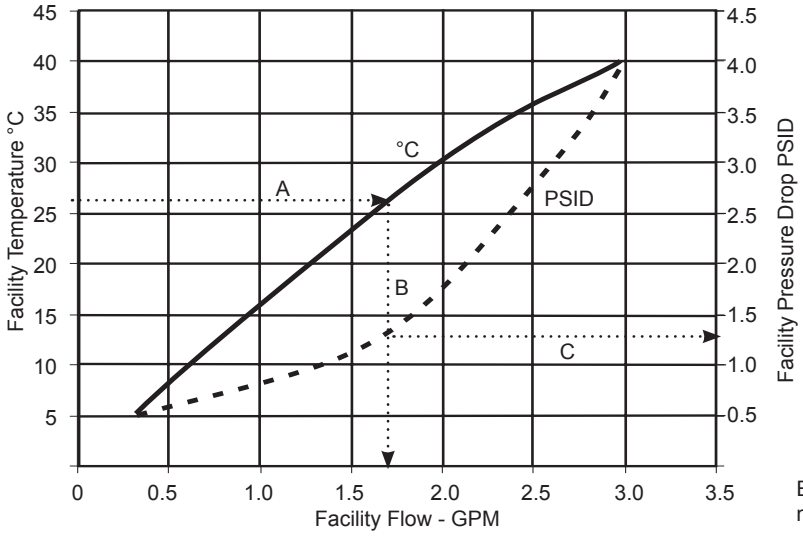

ThermoFlex2500

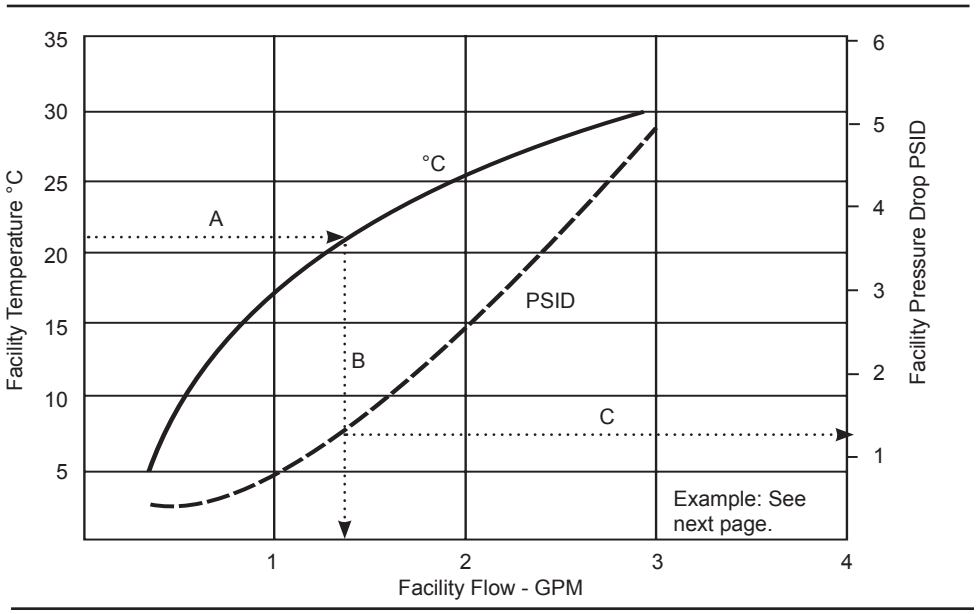

ThermoFlex3500/5000

The facility water must meet the following conditions for the chillers to maintain their full rated capacity.

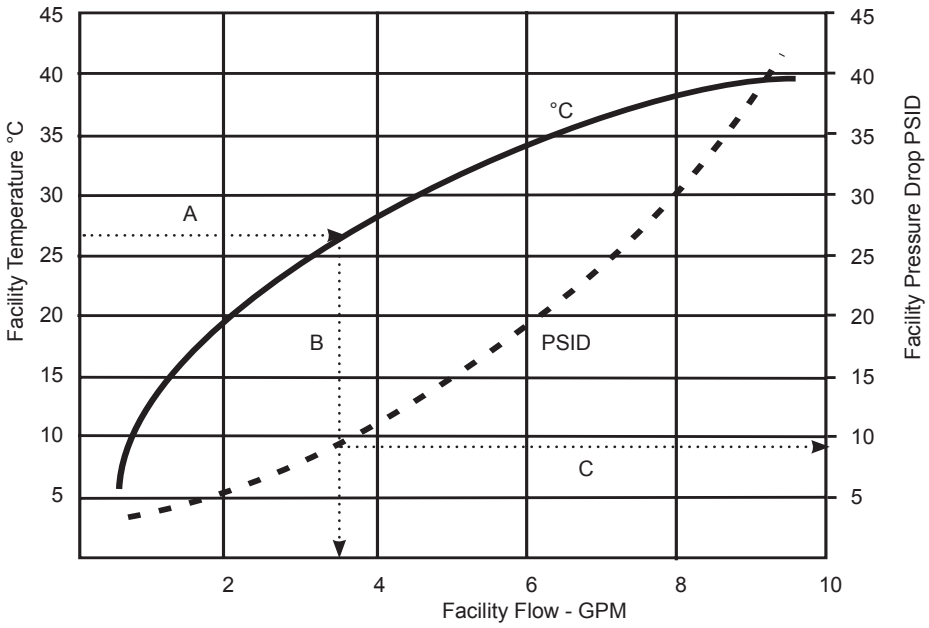

Example: See bellow.

ThermoFlex7500/10000

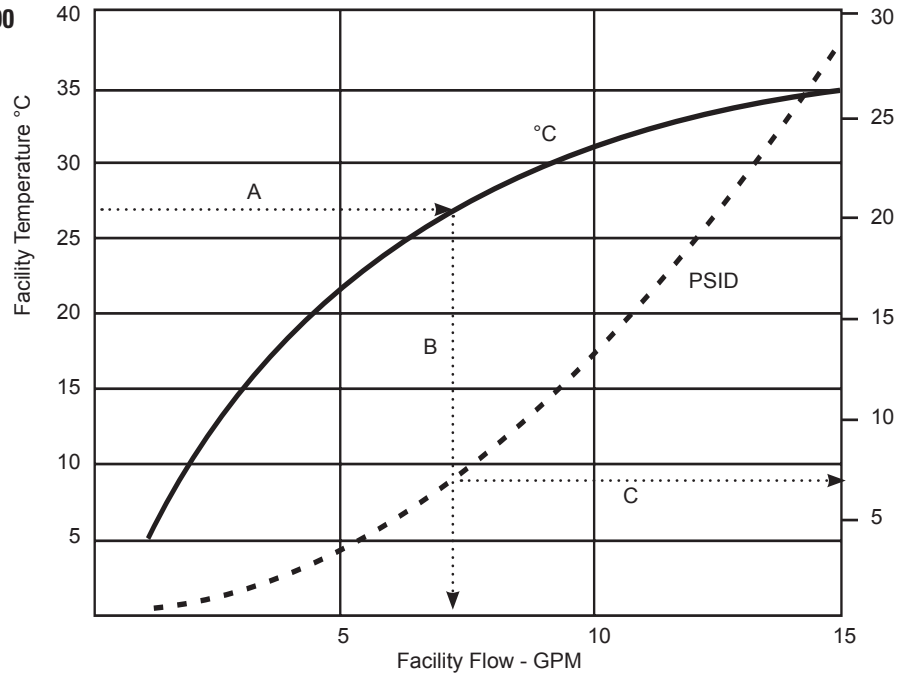

Example:
Follow the ·····► lines.
Start with a known, e.g., facility water temperature.
A - go across to temperature curve
B - drop down to determine the minimum required facility flow.
C - Where B crosses the PSID curve, go across to determine the minimum required PSID.

Fluid Filter Bag

The reservoir has a fluid bag filter designed to prevent the introduction of particulates into the system.

⚠ CAUTION

Install the filter bag before starting the chiller. ▲

Place your fingers below the front of the housing and push up on the housing to remove it.



Install the bag.

Replace the housing. Slide its back edge under the lip of the chiller's top panel and then press down until the housing snaps into place.

Figure 3-6 Fluid Filter Bag

Priming

If able, pre-fill the process fluid lines. The chiller is designed to shut down if not properly primed.

Ensure that there is enough fluid prepared to fill both the chiller and your application. If able, pre-fill the process fluid lines to reduce the setup time.

Fill the reservoir to the max fill line on the reservoir sight tube. To prevent the introduction of particulates into the system, fill the chiller with the reservoir bag filter in place.

Start the chiller using the power button on the control panel.

As the pump fills your application add fluid to the reservoir to maintain the fluid level.

Repeat this process until the fluid level no longer drops in the reservoir.

If you need to pause priming use the power button to turn the chiller off.

⚠ WARNING

Not completely filling the chiller and process fluid lines could damage the chiller's pump. ▲

Initial Filling Requirements

WARNING

Ensure the reservoir drain plug on the back of the chiller is in place, or the Riton fitting is closed, and that all plumbing connections are secure.

Before using any fluid refer to the manufacturer's MSDS for handling precautions. ▲

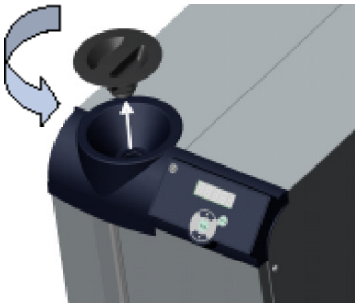

Locate and remove the reservoir cap by unscrewing it counterclockwise.

To prevent the introduction of particulates into the system, fill with the reservoir bag filter in place.

Figure 3-7 Reservoir Cap

The reservoir has a sight tube and ball for easy fluid level monitoring. *Slowly* fill the reservoir with clean process fluid through the funnel only, failure to comply may result in internal spillage.

Note Filling the reservoir above MAX LEVEL fill line will result in a over flow error (**Over Flow**) causing the chiller to shut down. Also, fluids expand when heated. ▲

Since the reservoir capacity may be small compared to your application and air may need to be purged from the lines, have extra cooling fluid on hand to keep the system topped off when external circulation is started.

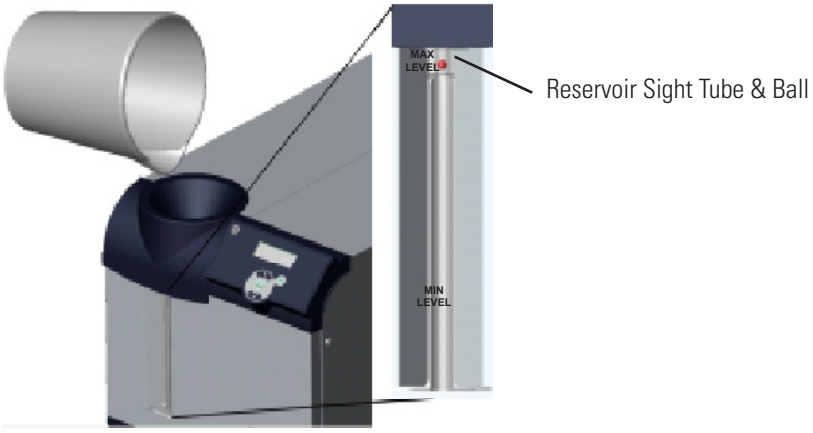

Figure 3-8 Reservoir Sight Tube & Ball

CAUTION

Before replacing the reservoir cap ensure the reservoir sight tube ball stopper is securely in place. ▲

Replace the reservoir cap by screwing it clockwise. Cap should be hand tight.

Fluid Top Off

Ensure the reservoir cap is at a safe handling temperature before removing. ▲

Remove the reservoir cap by unscrewing it counterclockwise.

To prevent the introduction of particulates into the system, fill the chiller with the reservoir bag filter in place.

The reservoir has a sight tube and ball for easy fluid level monitoring. *Slowly* fill the reservoir with clean process fluid through the funnel only, failure to comply may result in internal spillage.

Note Filling the reservoir above MAX LEVEL fill line will result in a over flow error (**Over Flow**) causing the chiller to shut down. Also, fluids expand when heated. ▲

Note Adding fluid that has a temperature differential with the fluid already in the reservoir will temporarily affect the chiller's stability performance. ▲

CAUTION

Before replacing the reservoir cap ensure the reservoir sight tube ball stopper is securely in place. ▲

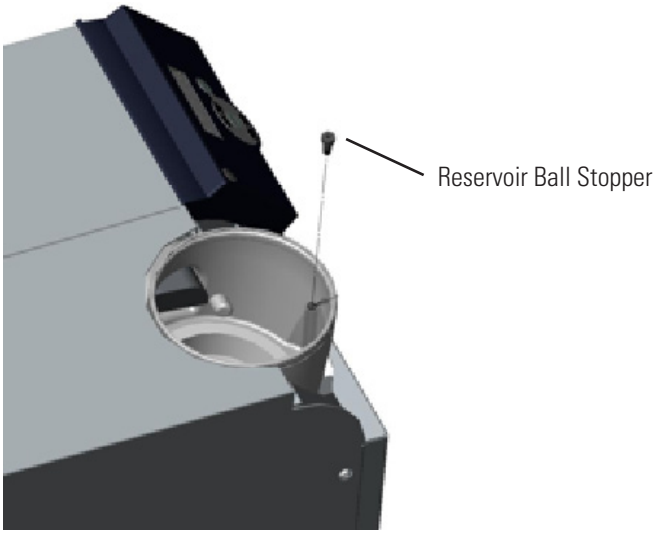

Figure 3-9 Reservoir Ball Stopper

Section 4 Operation

Deluxe Controller

The controller changes temperature using a Proportional-Integral-Derivative (PID) algorithm, and is designed with easy to use operator interface.

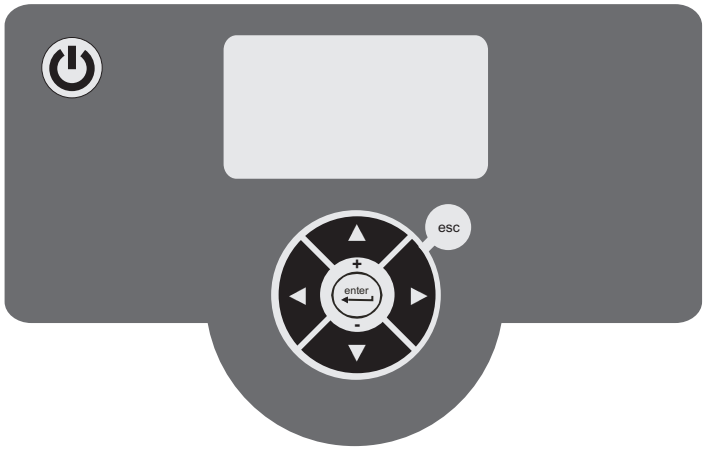

Figure 4-1 Deluxe Controller



This button is used to start and stop the chiller.



This button is used to navigate through the displays and to increase adjustable values.



This button is used to navigate through the controller displays and to decrease adjustable values.



These buttons are used to navigate through the controller displays.



This button has four functions. Pressing it once allows changes to be made to the display, pressing it again saves the change and allows you to continue to other displays. It is also pressed to clear messages.

Depressing and holding the enter button for two seconds before starting the chiller allows you to view and to make changes to the controller settings.



This button is used to abort any changes and at the same time return the controller to its previous display. Aborting a change can only be made before the change is saved.

Setup

Before starting the chiller, double check all electrical and plumbing connections. Have extra recirculating fluid on hand. If the chiller will not start refer to Section 7 Troubleshooting.

Do not run the chiller until fluid is added.

⚠ CAUTION

Ensure the chiller's castors are locked. ▲

If the chiller is equipped with a deionization filter cartridge refer to Section 5 for installation.

Initial Start Up

- Place the circuit protector located on the rear of the chiller to the up position.
- Press the  button on the controller.

The Controller will display the quick start screen that will allow you to configure the chiller. Refer to the Quick Start Guide supplied with the chiller or the copy located after the Table of Contents.

Use the arrow buttons to scroll through and highlight each line of the display. If a change is needed from the factory default value press the enter button.

⚠ CAUTION

If the auto restart is enabled and the chiller shuts down as a result of a power failure, when power is restored the chiller will automatically restart. ▲

If satisfied with all the entries, press enter when the last line - **Quick Start Done** - is highlighted. If not satisfied, press the left arrow or esc button to leave the quick start display.

In either case the screen will go blank.

If enter was pressed, press  on the controller to bring up the **Daily Start Up** displays and start the chiller. See next page.

Note After start up, check the plumbing connections for leaks. ▲

Daily Start Up

- Ensure the circuit protector located on the rear of the chiller is in the up position.
- Press the button on the controller, the pump and the refrigeration system will automatically start.

The controller automatically sequences through the following displays:

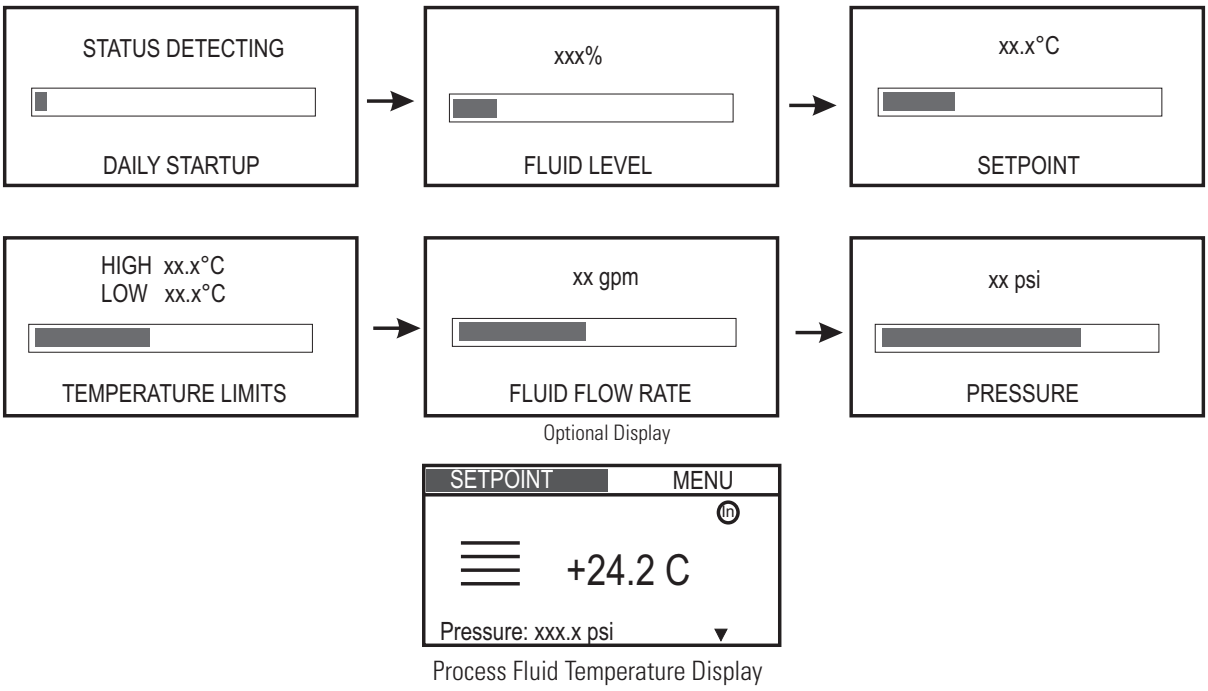

Figure 4-2 Daily Start Up Displays

Process Fluid Temperature Display

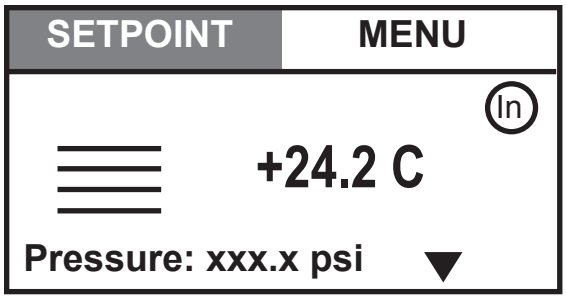

Figure 4-3 Process Fluid Temperature Display

The **SETPOINT** and **MENU** portions on the top of the display are used to view and/or change the controller's settings. They are explained in detail later in this Section.

The bars on the left of the display indicate the chiller's operating status.



Indicates the chiller is either not running or the ThermoFlex is at the desired setpoint.



Indicates the chiller is heating up to the setpoint.



Indicates the chiller is cooling down to the setpoint.

The small circle indicates which sensor is controlling the chiller.



When displayed, indicates the ThermoFlex is responding to the chiller's internal temperature sensor.



When displayed, indicates the ThermoFlex is responding to an external temperature sensor. See **Analog Comm - ACOM** in this Section to enable the external sensor.

The chiller is always in internal or external control. The default setting is internal.

The temperature displayed is the current process fluid temperature.

The message on the bottom is used to display the chiller's operational status. The status displays are explained later in this Section.

SETPOINT

Note Depressing and holding the enter button for two seconds before starting the chiller allows you to view, as well as make changes to, the setpoint. ▲

Use the arrow buttons to highlight **SETPOINT**.

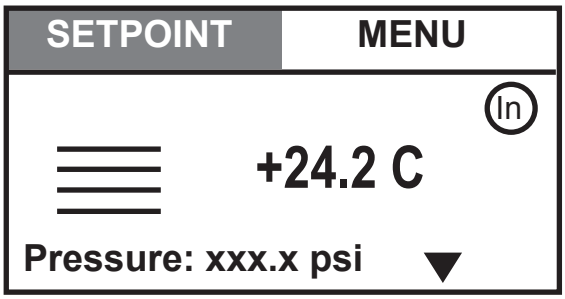

Press enter and the setpoint value appears. If needed, press enter again and the value starts flashing indicating the setpoint can be changed.

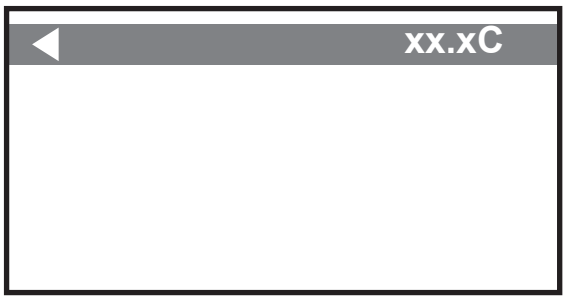

The setpoint range for standard temperature chillers is +5°C to +40°C, the range for high temperature chillers is +5°C to +90°C. Use the up and down arrow buttons to change the setpoint to the desired value.

Once the desired value is displayed press the enter button again to accept the change and to stop the flashing.

Return to the Process Fluid Temperature Display by pressing the left arrow or esc button.

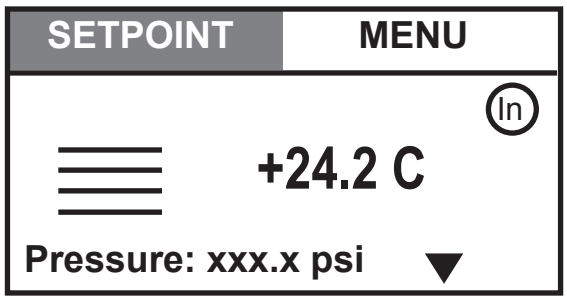

Status Displays

The controller can show up to four different messages. Use the down arrow button to highlight the bottom of the display.

Press enter to get the displayed message to flash.

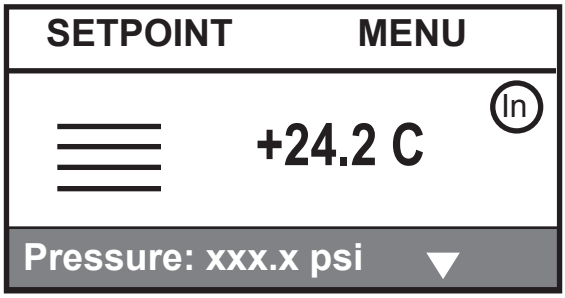

Use the arrow buttons to scroll through the available displays. Once the desired display is showing press enter again.

Available Displays:

Pressure: Indicates pump discharge pressure

Level %: Indicates reservoir fluid level

Flow: Indicates the process fluid flow rate (Optional)

Resistivity: Indicates the process fluid resistivity level (Optional)

The arrow at the end of the display indicates which direction you can scroll to get to another display. A ▼ means you can only scroll down to the next display. A ▲means you can only scroll up to the next display. ▲▼ means you can scroll up or down.

MENU Displays

The ThermoFlex controller uses menus to view/change the controller's settings.

Note Depressing and holding the enter button for two seconds before starting the chiller allows you to view and to make changes to the settings. ▲

1. Use the arrow buttons to highlight MENU.

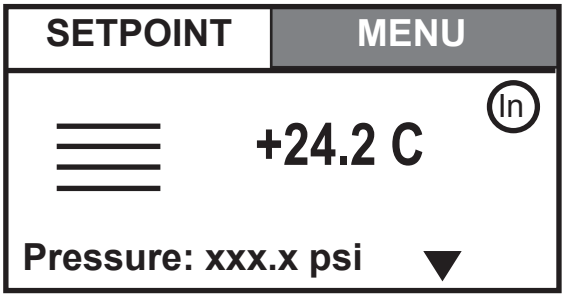

2. The controller brings up the Main Menu Display.

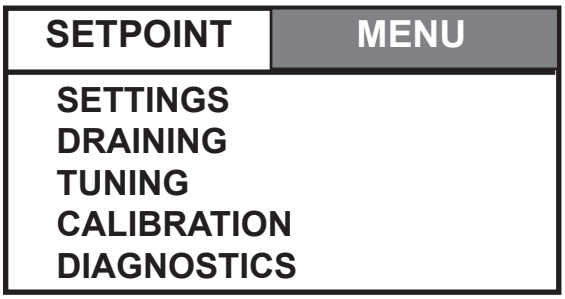

Main Menu Display

3. Use the up and down arrow buttons to highlight the desired option.

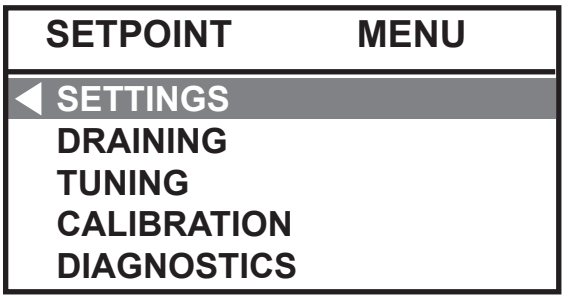

4. With the desired option highlighted, press enter to display various sub-menus.

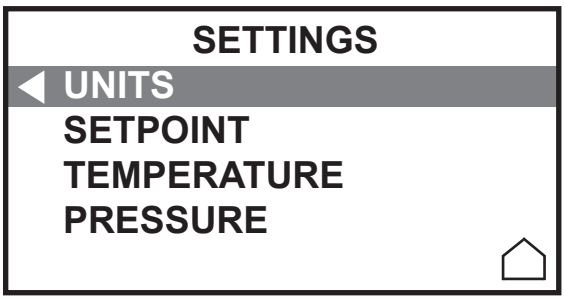

5. There are various ways to navigate through all the menu options.

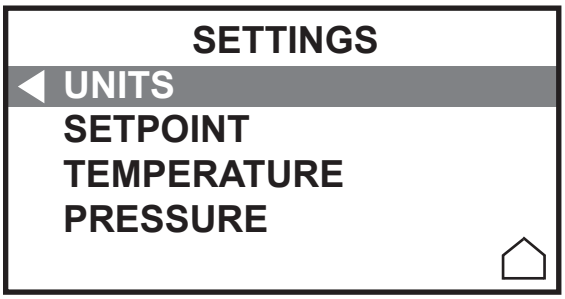

6. In the example in step 5, pressing the left arrow button or the esc button on the controller will return you to the previous display.

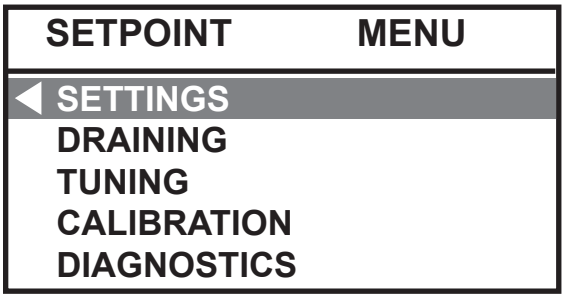

7. Or, highlight the home icon at the bottom of the display.

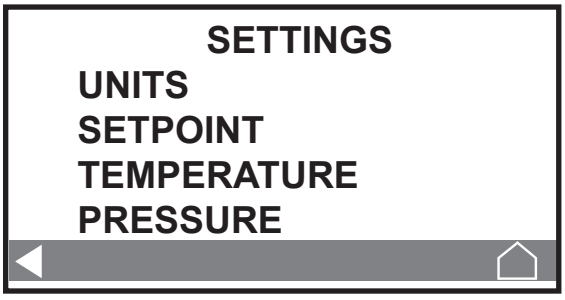

8. Then press enter to return to the Main Menu Display.

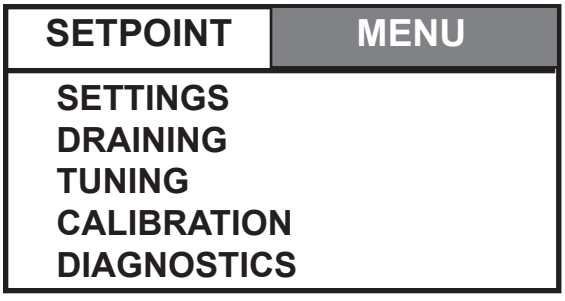

Main Menu Tree

Note The controller can only display six lines at a time. Use the up and down arrow buttons to scroll through and highlight each line. ▲

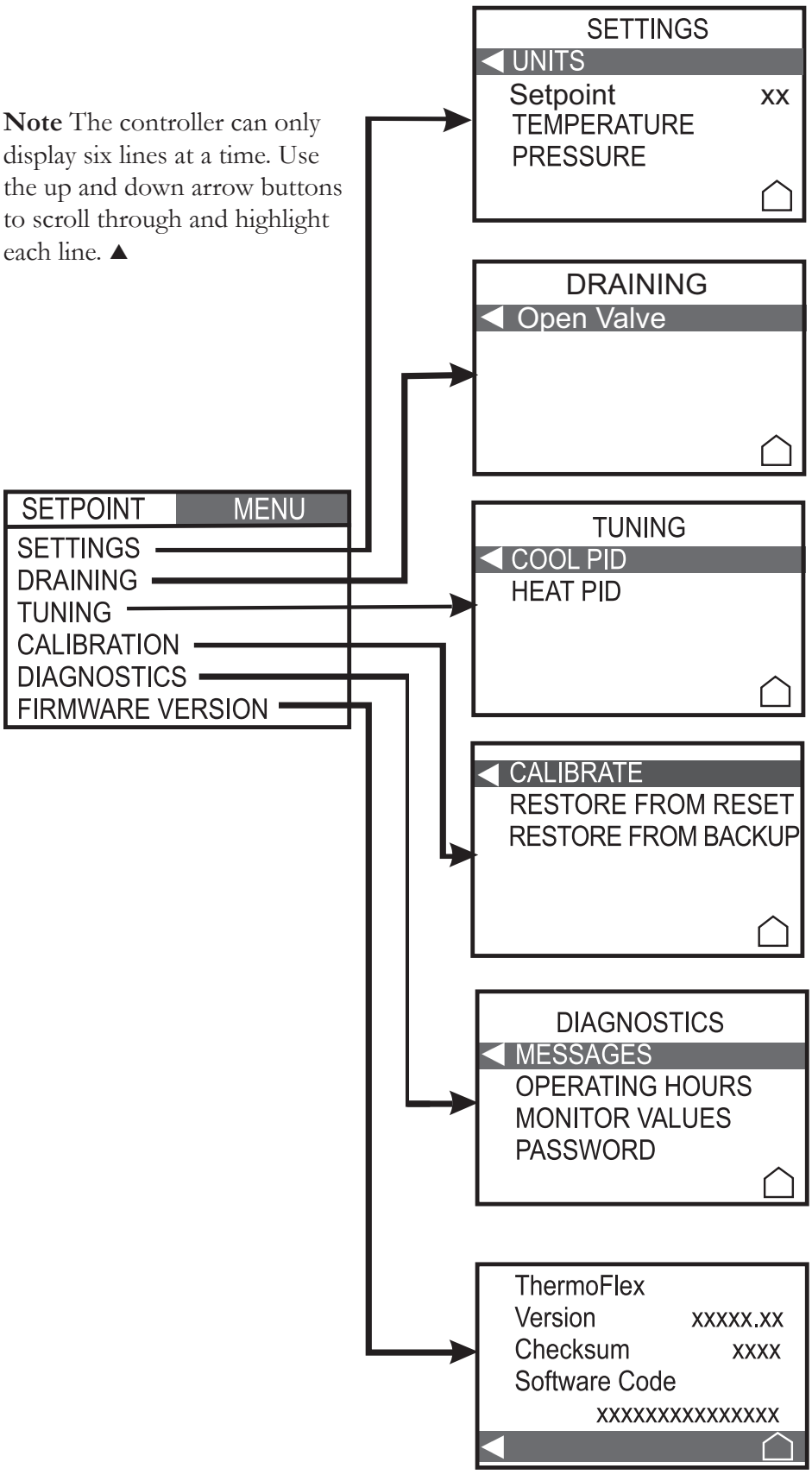

SETTINGS allows you to view/change the more commonly used settings, see next page.

DRAINING opens/closes the optional anti drainback valve, see page 4-20 .

TUNING allows you to view/change the controller's **PID** values, see Section 7.

CALIBRATE calibrates the chiller's temperature, pressure and optional fluid flow sensors, see Section 8.

DIAGNOSTICS is used to display alarm messages, see Section 7, and also to display the chiller, filter and optional DI cartridge operating hours, see Section 6. **MONITOR VALUES** and **PASSWORD** are used only by qualified technicians.

FIRMWARE VERSION is used to display the controller's firmware information. Press the esc button to return to the Main Menu Display.

SETTINGS Menu Tree

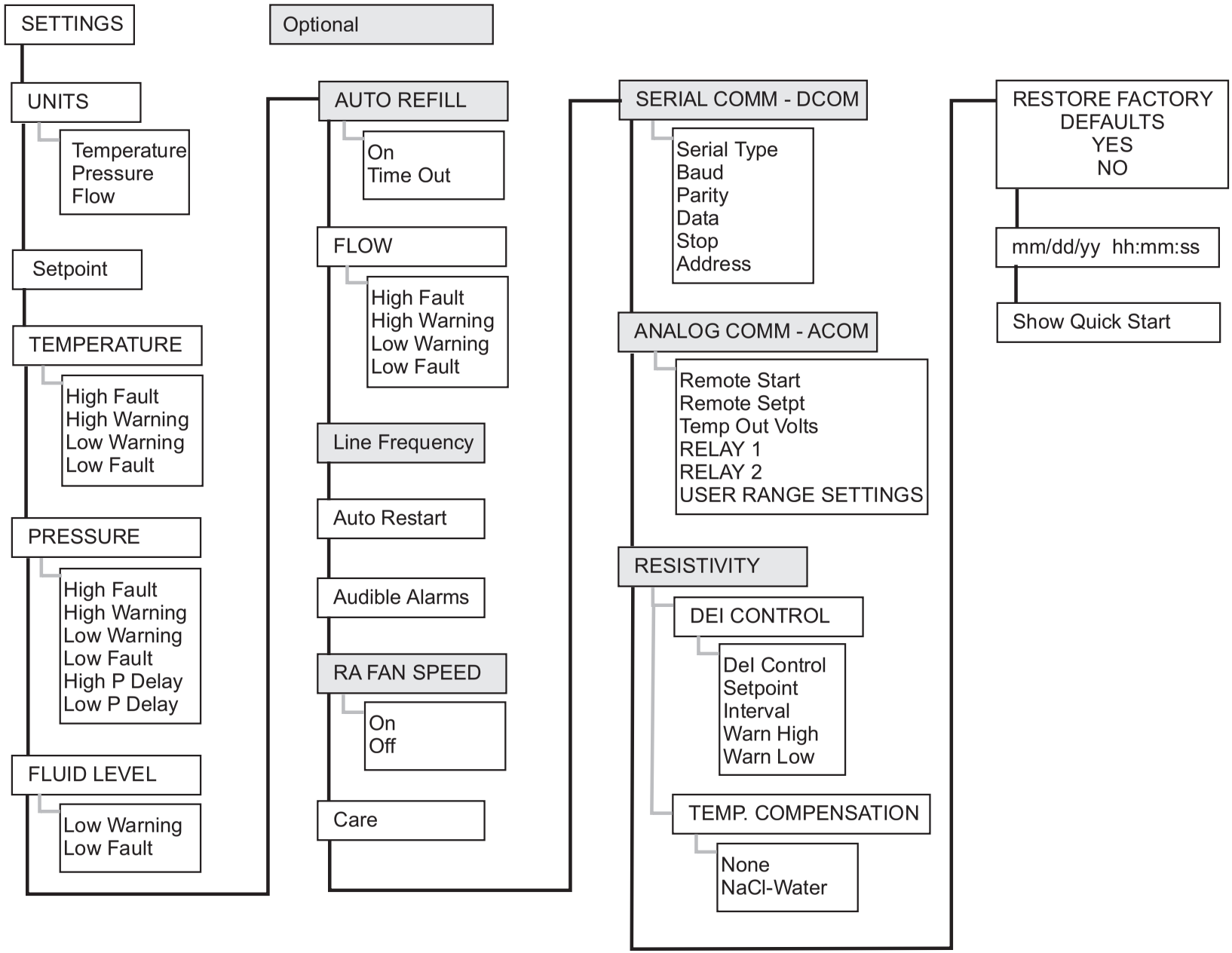

SETTINGS

SETTINGS allows you to view/change the more commonly used settings.

Note The controller can only display six lines at a time. Use the up and down arrow buttons to scroll through and highlight each line. ▲

If a change to a setting is needed, highlight the desired line and then press the enter button. The highlight will start to flash.

If the text on a line is all capital letters, e.g., **UNITS** and **TEMPERATURE**, the setting has a sub-menu. Pressing enter will bring up the sub-menu. The sub-menus, shown on the following pages, allow you to view/change the applicable settings.

Lines that are not all capital, e.g., **Setpoint** and **Line Frequency**, indicate the changes can be made directly on the **SETTINGS** display.

If the line has a box, **Auto Restart**, pressing enter will turn the box black. A black box indicates the feature is enabled. Pressing enter again blanks the box and disables the feature.

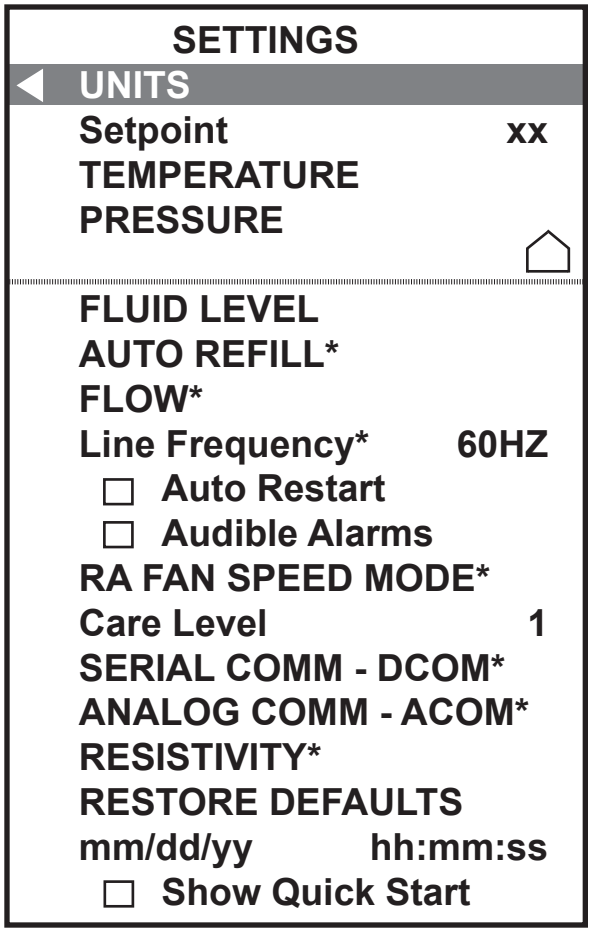

*Only displays on chillers equipped with the option.

UNITS

UNITS is used to view/change the controller's temperature, pressure and fluid flow (only chillers with an optional flow transducer) scales.

If a change to the setting is needed, highlight the desired scale and then press the enter button. The highlight will flash. Use the up/down arrow keys to bring up the desired scale. Once the desired scale is displayed press enter to accept the change and stop the flashing.

When the desired changes are made use the left arrow or esc key to return to the **SETTINGS** display.

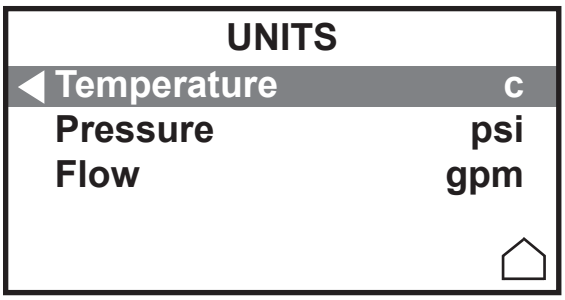

Scales: **°C** or **°F**
PSI, Bar or **kPa**
GPM or **LPM**

Defaults: **°C**
PSI
GPM

Setpoint

Setpoint can be used to view/change the controller's setpoint temperature.

If a change to the setpoint is needed, highlight **Setpoint** and then press the enter button. The highlight will flash. Use the up/down arrow keys to bring up the desired setpoint. Once the desired setpoint is displayed press enter to accept the change and stop the flashing.

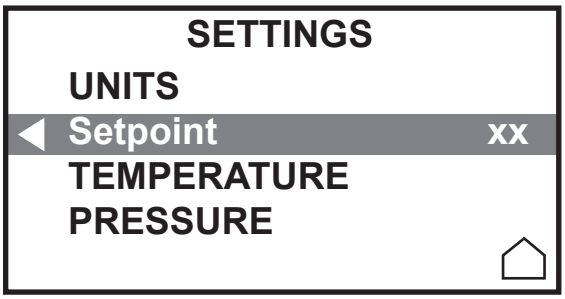

Setpoint Range:
+5°C to **+40°C** for standard temperature chillers
+5°C to **+90°C** for high temperature chillers,
+5°C to **+88°C** for P1 and P2 high temp chillers

Setpoint Default:
+20°C for all chillers

TEMPERATURE

TEMPERATURE is used to view/change the chiller's high and low temperature fault and warning settings. If the chiller exceeds the fault setting it will shut down, the controller will display a fault message and, if enabled, sound the alarm. If the chiller exceeds the warning setting the chiller will continue to run, the controller will display a warning message and, if enabled, sound the alarm.

If a change is needed, use the arrow keys to highlight the desired setting and then press the enter button. The highlight will flash. Use the up/down arrow keys to change the setting. Once the desired setting is displayed press enter to accept the change and stop the flashing.

Note You cannot set the **High Warning** value higher than the **High Fault** value. You cannot set the **Low Warning** value lower than the **Low Fault** value. ▲

When the desired changes are made use the left arrow or esc key to return to the **SETTINGS** display.

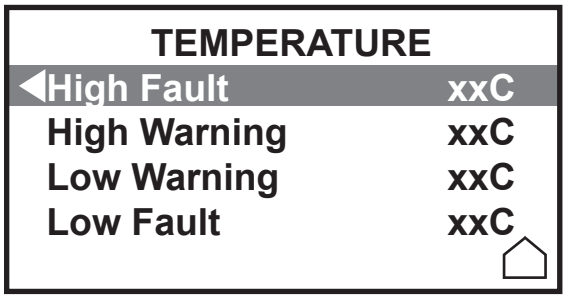

High Fault/Warning Range:
+2°C to **+43°C** for standard temperature chillers
+2°C to **+93°C** for high temperature chillers
High Fault/Warning Default:
+42°C for standard temperature chillers
+92°C for high temperature chillers
Low Fault/Warning Range:
+2°C to **+43°C** for all chillers
Low Fault/Warning Default:
+3°C for all chillers

PRESSURE

PRESSURE is used to view/change the chiller's high and low pressure fault and warning settings and set a delay time. If the chiller exceeds the fault setting it will shut down, the controller will display a fault message and, if enabled, sound the alarm. If the chiller exceeds the warning setting the chiller will continue to run, the controller will display a warning message and, if enabled, sound the alarm. The delay sets the length of time needed after a pressure fault before the chiller shuts down.

Note Since the controller can only display six lines at a time, keep pressing the down arrow until the **High P Delay** and **Low P Delay** lines are visible. ▲

If a change to the setting is needed, use the arrow keys to highlight the desired pressure and then press the enter button. The highlight will flash. Use the up/down arrow keys to change the setting. Once the desired setting is displayed press enter to accept the change and stop the flashing.

Note You cannot set the **High Warning** value higher than the **High Fault** value. You cannot set the **Low Warning** value lower than the **Low Fault** value. ▲

When the desired changes are made use the left arrow or esc key to return to the **SETTINGS** display.

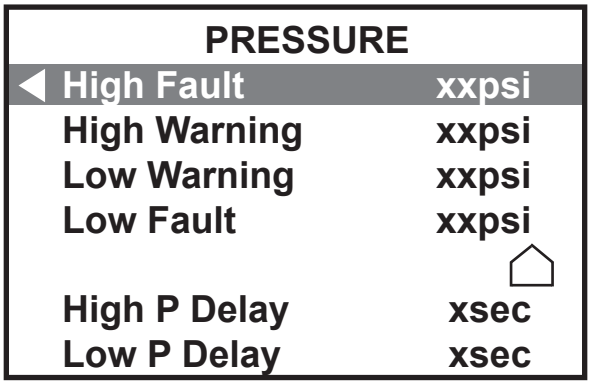

High/Low Fault/Warning Range:
Pump dependent - see below

High/Low Pressure Time Delay Range:
0 to **30** seconds (**0** to **60** for P3 - P5 pumps)
High Time Pressure Delay Default:
0 seconds (**60** seconds for P3 - P5 pumps)
Low Time Pressure Delay Default:
10 seconds

Pump	Fault Range	High Default	Low Default
P1 P2 T0 T1:	3 to 105 PSI	105 PSI	3 PSI
P3 60 Hz:	3 to 46 PSI	46 PSI	3 PSI
P3 50 Hz:	3 to 32 PSI	32 PSI	3 PSI
P4 60 Hz:	3 to 85 PSI	85 PSI	3 PSI
P4 50 Hz:	3 to 60 PSI	60 PSI	3 PSI
P5 60 Hz:	3 to 87 PSI	87 PSI	3 PSI
P5 50 Hz:	3 to 56 PSI	56 PSI	3 PSI
T5 60 Hz:	2 to 105 PSI	105 PSI	2 PSI
T5 50 Hz:	2 to 105 PSI	105 PSI	2 PSI

Pump	Warning Range	High Default	Low Default
P1 P2 T0 T1:	4 to 100 PSI	100 PSI	4 PSI
P3 60 Hz:	4 to 46 PSI	46 PSI	4 PSI
P3 50 Hz:	4 to 32 PSI	32 PSI	4 PSI
P4 60 Hz:	4 to 85 PSI	85 PSI	4 PSI
P4 50 Hz:	4 to 60 PSI	60 PSI	4 PSI
P5 60 Hz:	4 to 87 PSI	87 PSI	4 PSI
P5 50 Hz:	4 to 56 PSI	56 PSI	4 PSI
T5 60 Hz:	4 to 105 PSI	105 PSI	4 PSI
T5 50 Hz:	4 to 105 PSI	105 PSI	4 PSI

FLUID LEVEL

FLUID LEVEL is used to view/change the chiller's reservoir level fault and warning settings. If the chiller exceeds the fault setting it will shut down, the controller will display a fault message and, if enabled, sound the alarm. If the chiller exceeds the warning setting the chiller will continue to run, the controller will display a warning message and, if enabled, sound the alarm.

If a change to the setting is needed, use the arrow keys to highlight the desired line and then press the enter button. The highlight will flash. Use the up/down arrow keys to change the setting. Once the desired setting is displayed press enter to accept the change and stop the flashing.

Note You cannot set the **Low Warning** value lower than the **Low Fault** value. ▲

When the desired changes are made use the left arrow or esc key to return to the **SETTINGS** display.

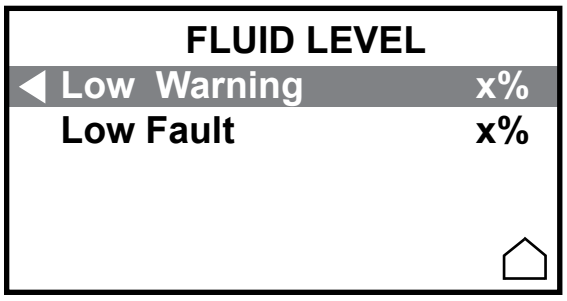

Low Warning/Fault Range/Default:
Heater dependent - see below

Heater	Warning Range	Default
None	6 - 100%	6%
1 kW:	58 - 100%	58%
2.3 kW:	69 - 100%	69%
5.0 kW:	87 - 100%	87%
4.6 kW:	87 - 100%	87%
Heater	**Fault Range**	**Default**
None	0 - 100%	0%
1 kW:	52 - 100%	52%
2.3 kW:	63 - 100%	63%
5.0 kW:	81 - 100%	81%
4.6 kW:	81 - 100%	81%

AUTO REFILL (Optional)

AUTO REFILL is used to view/change the chiller's optional auto refill settings. **On** is the % of fluid level in the reservoir needed to turn the option on. **Time Out** is the maximum time the option will operate. Setting the time to **0** disables the option.

When the desired changes are made use the left arrow or esc key to return to the **SETTINGS** display.

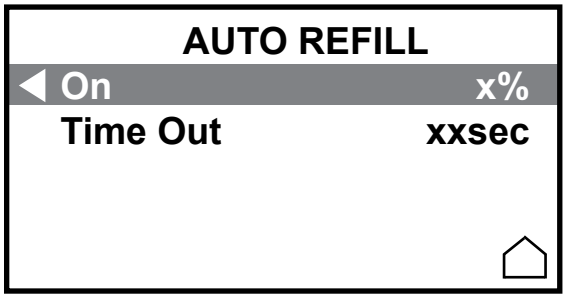

On % Default: Heater dependent - see below

Heater	Range	Default
None	70 - 100%	70%
1 kW:	70 - 100%	70%
2.3 kW:	69 - 100%	69%
5.0 kW:	87 - 100%	87%
4.6 kW:	87 - 100%	87%

Time Out Range: 0 - 900 seconds
Time Out Default: 45 seconds
80 seconds for ThermoFlex7500/10000
Setting the time to **0** disables the option.

FLOW (Optional)

FLOW is used to view/change the chiller's process fluid fault and warning settings. If the chiller exceeds the fault setting it will shut down, the controller will display a fault message and, if enabled, sound the alarm. If the chiller exceeds the warning setting the chiller will continue to run, the controller will display a warning message and, if enabled, sound the alarm.

If a change to the setting is needed, use the arrow keys to highlight the desired line and then press the enter button. The highlight will flash. Use the up/down arrow keys to change the setting. Once the desired setting is displayed press enter to accept the change and stop the flashing.

Note You cannot set the **High Warning** value higher than the **High Fault** value. You cannot set the **Low Warning** value lower than the **Low Fault** value. ▲

When the desired changes are made use the left arrow or esc key to return to the **SETTINGS** display.

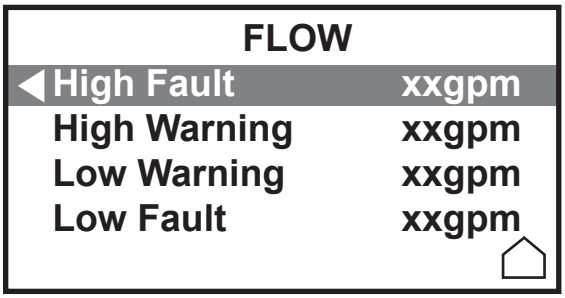

High/Low Flow Fault/Warning Range/Defaults:

Pump	Range	High/Low Defaults
P1 P2 T1 T0:	0.0 to 10.5 GPM	0.0 GPM
P3 P4 P5:	0.0 to 30.0 GPM	0.0 GPM
T5	0.0 to 15.0 GPM	0.0 GPM

This feature is not enabled until the value is changed to something other than 0.0. If the feature is not enabled and the low flow rate drops below the flow rate listed below the chiller will continue to run and the controller, if displaying flow, will display **FLow**: **Low FLow**.

P1, T0 ,T1 and T5 Pump 0.3 GPM

P2 Pump 1.0 GPM

P3, P4 and P5 Pump 4.0 GPM

Line Frequency (Optional)

Line Frequency is used to identify the incoming frequency for chillers with a P3 - P5 pump and the capability to run on either **50 Hz** or **60 Hz**. The selected frequency automatically adjusts the firmware's *fixed* high pressure default setting.

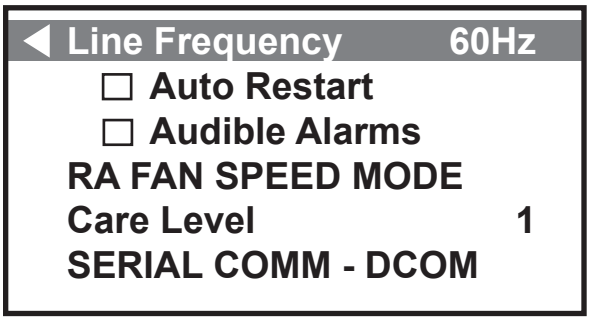

Frequency Range: 50 Hz or **60 Hz**

Frequency Default: 60 Hz

Auto Restart

Auto Restart is used to turn the auto restart feature on/off.

CAUTION

If the auto restart is enabled and the chiller shuts down as a result of a power failure, when power is restored the chiller will automatically restart and operate at the saved values. Consider any possible risks before enabling this mode of operation. ▲

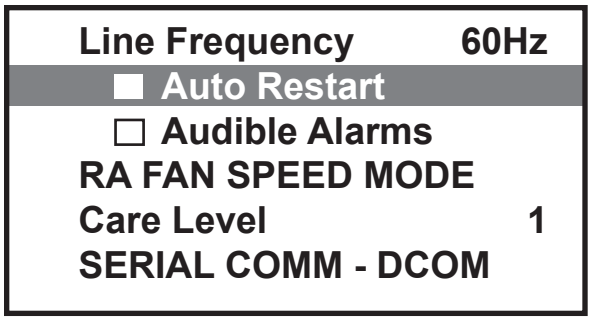

With **Auto Restart** highlighted press enter. The box will turn black indicating the feature is enabled.

Audible Alarms

Audible Alarms is used to turn the audible alarm on/off

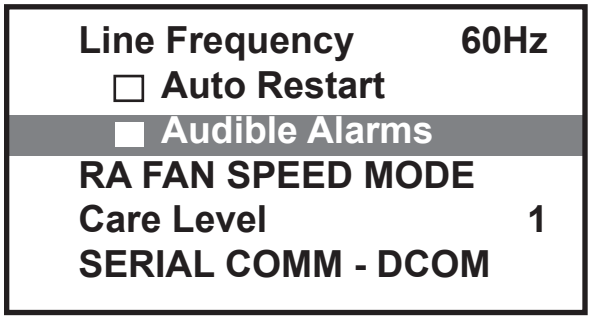

With **Audible Alarms** highlighted press enter. The box will turn black indicating the feature is enabled.

RA FAN SPEED MODE (ThermoFlex 2500 air-cooled chillers only)

RA FAN SPEED MODE controls the fan speed. **Auto** allows the fan to run under the conditions listed in Section 3. Selecting **On** allows the fan to run at high speed all the time.

Note **On** is required for the chiller to achieve its full cooling capacity specification. ▲

When the desired changes are made use the left arrow or esc key to return to the **SETTINGS** display.

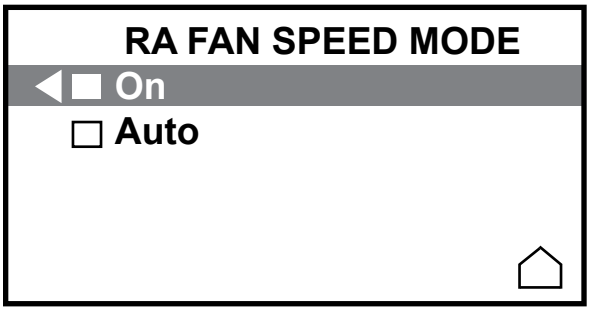

Fan Speed Range: **On** or **Auto**

Fan Speed Default: **Auto**

Care Level

Care Level sets the preventive care cleaning frequency reminder for the chiller's air and fluid filters.

If a change to the level is needed, highlight **Care Level** and then press the enter button. The highlight will flash. Use the up/down arrow keys to bring up the desired level Once the desired level is displayed press enter to accept the change and stop the flashing.

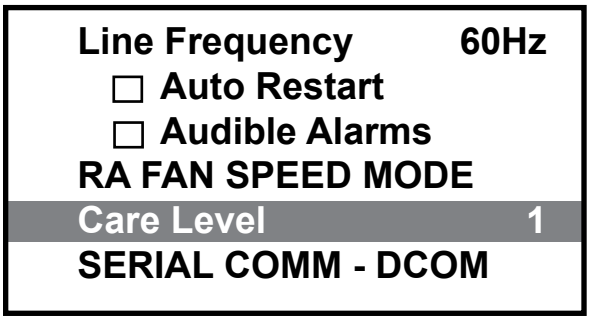

Care Level Range: **off**
1 (1000 hours)
2 (2000 hours)
3 (3000 hours)

Care Level Default: **1** (1000 hours)

See Section 6 for additional details.

SERIAL COMM - DCOM (Optional)

SERIAL COMM - DCOM is used to configure/enable the chiller's optional serial communications feature. If a change to the setting is needed, use the arrow keys to highlight the desired line and then press the enter button. The highlight will flash. Use the up/down arrow keys to change the setting. Once the desired setting is displayed press enter to accept the change and stop the flashing.

Note None of the controller's other menu displays are available when serial comm is enabled. ▲

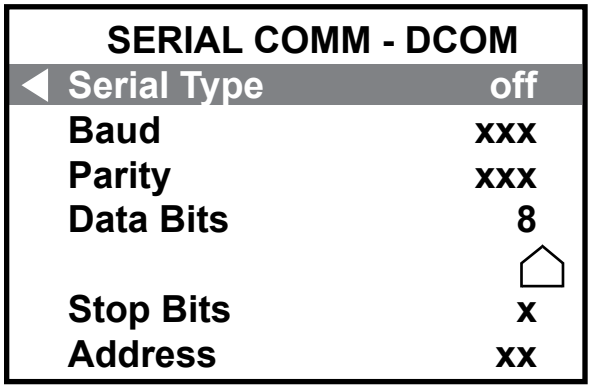

Note Keypad operation is still available with serial communications enabled. ▲

Serial Type: RS232, RS485, off

Baud Range: 9600, 4800, 2400, 1200, 600 or **300**

Parity: even, odd or **none**

Data Bits: Fixed at **8**

Stop Bits: 2 or **1**

Unit ID: 1 to **99** (RS 485 only)

If serial communications is enabled a general message will appear.



Press enter to extinguish the message.

Refer to Appendix C for additional information.

ANALOG COMM - ACOM (Optional)

ANALOG COMM - ACOM is used to configure/enable the chiller's optional analog communications feature. Use the arrow keys to highlight the desired option and then press the enter button. The ☐ box will turn black ■ indicating that option is enabled. Press enter again to turn it off.

⚠ CAUTION

When operating a ThermoFlex7500-10000 with the remote sensor enabled ensure the chiller's response to lowering the setpoint does not result in operation below 10°C process temperature. Operation below 10°C requires the use of 50/50 EG/water or 50/50 PG/water. ▲

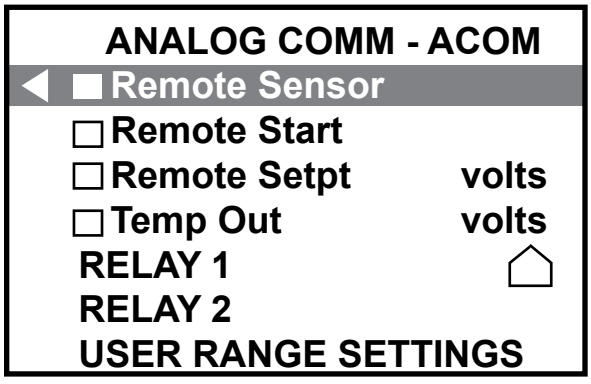

When an option is enabled a general message will appear, for example:



Press enter to extinguish the message.

Refer to Appendix D for additional information.

RESISTIVITY (Optional)

Note This option is available on standard-temp chillers. ▲

RESISTIVITY enables/configures the resistivity option. With **DE-I CONTROL** highlighted press enter to enable the feature. Next set the limits to the desired values.

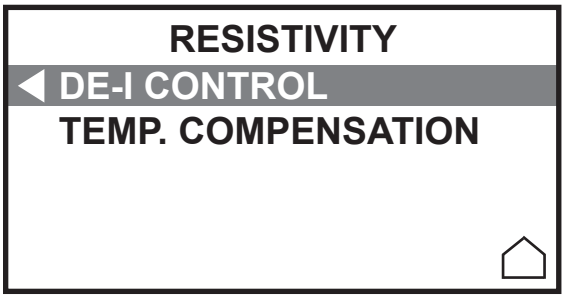

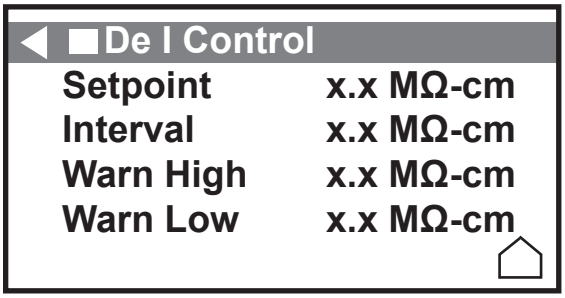

Resistivity	Range	Default
Setpoint:	**0.2** to **3.0**	**1.0 MΩ-cm**
Interval	**0.1** to **0.5**	**0.1 MΩ-cm**
Warning High:	**0.0** to **3.5**	**3.0 MΩ-cm**
Warning Low:	**0.0** to **3.5**	**0.5 MΩ-cm**

With **TEMP. COMPENSATION** highlighted press enter to turn compensation off or on.



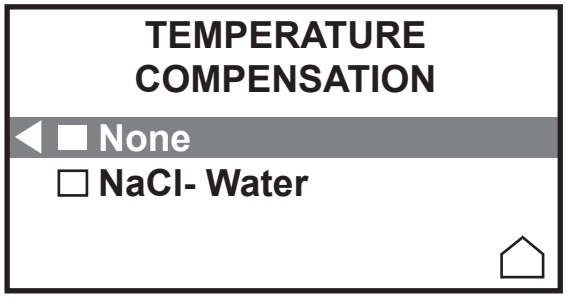

When the desired changes are made use the left arrow or esc key to return to the **SETTINGS** display.

RESTORE DEFAULTS

RESTORE DEFAULTS restores the controller back to factory default values. A reset is automatically performed whenever new firmware is installed.

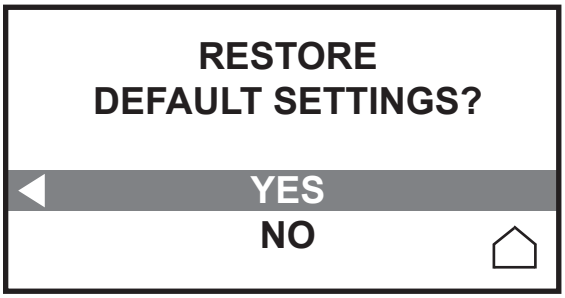

Use the left arrow or esc key to return to the **SETTINGS** display.

mm/dd/yy hh:mm:ss

mm/dd/yy hh:mm:ss sets the date and time. Some error messages can display the date and time of occurrence, see Section 7.

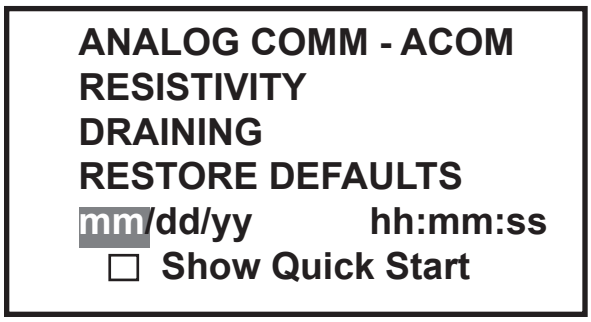

Use the arrow keys to highlight the desired setting. Press enter to start the highlight flashing. Use the arrow keys to change the setting. Press enter to accept the change and stop the flashing.

Show Quick Start

Show Quick Start reruns the initial start up menu. The Quick Start menu will appear the next time the chiller is started.

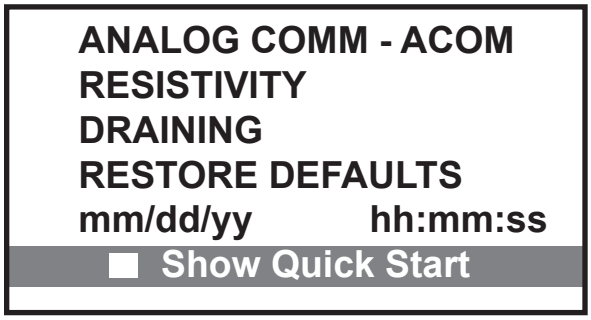

With **Show Quick Start** highlighted press enter. The box will turn black indicating the feature is enabled.

DRAINING (Optional)

DRAINING opens/closes the optional anti drainback valve. The chiller must be off to drain the valve. Press enter to start the draining. The display will change to **Close Valve**. When the draining is complete press enter again to close the valve.

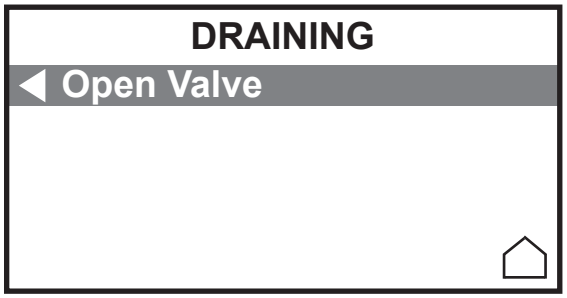

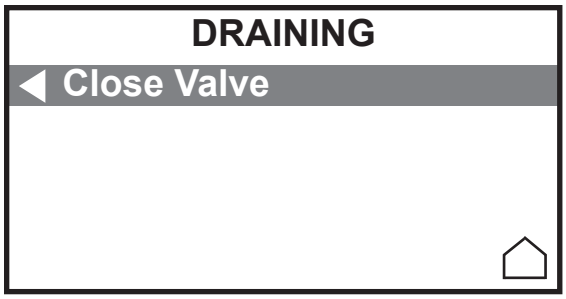

Shut Down

Press the  button.

The controller displays:

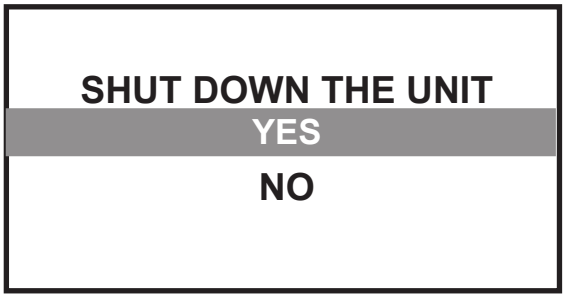

With **YES** highlighted, press enter.

To protect the compressor the chiller will enter a 5 to 20 second shut down cycle (colder process fluids take longer) before the refrigeration system and pump shut down.



The display then goes blank.



Using any other means to shut the chiller down can reduce the life of the compressor. ▲



Always turn the chiller off and disconnect it from its supply voltage before moving. ▲



The circuit protector located on the rear of the chiller is not intended to act as a disconnecting means. ▲

Section 5 Options/Accessories

Auto Refill

The auto refill provides makeup fluid to replace any fluid lost to evaporation, etc. It requires a pressurized fluid source connection to the ¼" Female Pipe Thread fitting on the rear of the chiller. (If Teflon® tape is used, ensure the tape does not cover the connection's starting-end thread .)

Note ThermoFlex7500s and 10000s with a P3, P5 or T5 pump have a ¼" Male brass plug installed in the connection, remove the plug before connecting the makeup fluid. ▲



Figure 5-1 Auto Refill Fitting

The auto refill fluid must also meet water quality standards or the valve may fail to operate as designed, see Section 3.

The auto refill valve input pressure must be < 80 PSI to ensure the valve functions properly.

Note Adding fluid that has a temperature differential with the fluid already in the reservoir will temporarily affect temperature stability performance. ▲

The auto refill operates when all of the following conditions are met:

- Fluid is available
- The chiller is turned on
- The fluid reaches a low level condition.

The auto refill shuts off when:

- The fluid reaches the correct operating level.
- The delay timer exceeds user fill time entered in the Quick Start or **SETTINGS** menu.
- The chiller shuts down for any reason.

Note Setting the fill time to 0 disables auto refill. ▲

Internal DI Cartridge

Note This option is not available on high-temp chillers. ▲

A partial flow DI filter cartridge is designed to maintain water resistivity between 1 and 3 MΩ-cm.

Note The DI option results in a 0.5 gpm reduction of available flow. ▲

CAUTION

Do not use a Deionization (DI) filter cartridge with Inhibited EG or Inhibited PG. A DI filter will remove inhibitors from the solution rendering the fluid ineffective against corrosion protection. Also, inhibitors increase fluid conductivity. ▲

The controller will display a **High Resistivity** or a **Low Resistivity** warning message when the process fluid resistivity exceeds the limit set in the controllers **RESISTIVITY SETTINGS** display, see Section 4.

Remove the two thumbscrews securing the DI access panel to the top of the chiller.

If there is a cartridge in place, first undo the hose fitting by pressing on the quick disconnect located on the top white connection.

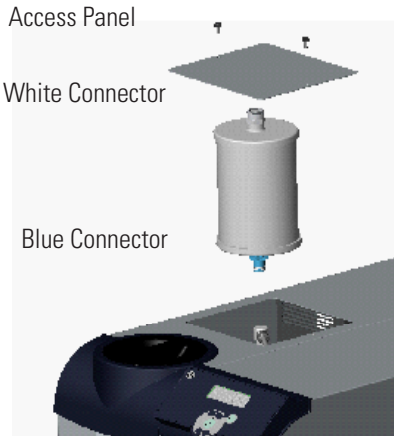

Figure 5-2 Internal DI Cartridge

CAUTION

The DI Cartridge will overpressurize if it is removed from the chiller before removing the hose fitting. ▲

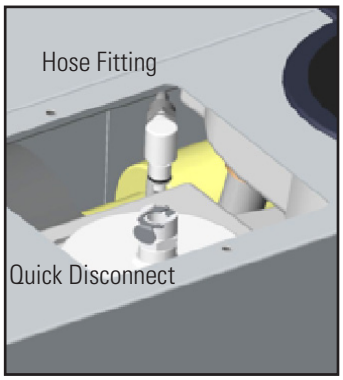

Figure 5-3 DI Fittings

Next rotate the cartridge ¼ turn counter-clockwise and then pull the cartridge straight up to remove it.

Remove the new cartridge from the shipping bag. The cartridge has a blue and a white connector. Lower the cartridge into the chiller with the blue connector facing downward. Press down on the cartridge lightly to engage and then rotate it ¼ turn clockwise (do not over rotate) or until you feel the filter click into place.

Push the hose fitting into the quick disconnect located on the white end of the cartridge. Replace the access panel and thumbscrews.

Note The cartridge can be changed with the chiller running, however, since the cartridge runs in a parallel arrangement, disconnecting the cartridge adds 0.5 gpm to the main flow. The additional flow will cause an increase in system pressure which may cause a high fluid pressure fault. ▲

P1 P2 T0 T1 Pump Pressure Relief Valve (Internal Configuration)

The pressure relief valve, located on the top left rear of the chiller, is used to set the desired system back pressure to your application. The valve is factory preset to 80 ± 5 psi (5.5 ± 0.4 bar).

If the chiller is not plumbed to an application, set the pressure by installing a loop of hose equipped with a shut-off valve between the supply and return fittings. Start the chiller and allow it to prime, then close the valve.

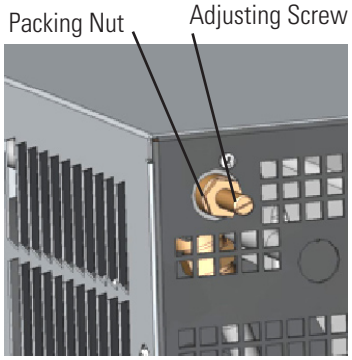

Figure 5-4 Nut and Screw

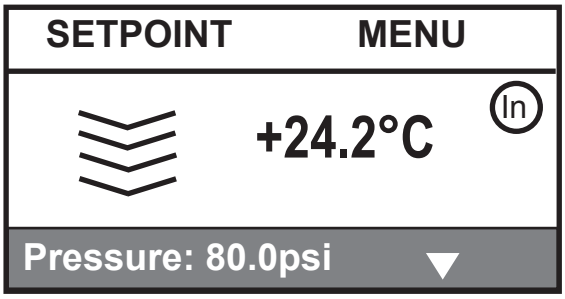

Figure 5-5 Pressure Status Display

Use the Status Display to display P 1, it should display 80 ± 5 psi.



Use a screwdriver to turn the adjusting screw (counterclockwise to reduce pressure) until the controller displays the desired setting.

Note Due to internal back pressure, the minimum pressure setting for a deadheaded pump is 32 psi (2.2 bar) for a P 2 pump, and 8 psi (0.6 bar) for a P 1 (these settings prohibit external flow from the chiller). ▲

If the chiller is plumbed to an application, ensure the chiller is off. Then back out the adjusting screw counterclockwise to reduce pressure. Turn the chiller on. Ensure that there is back pressure in the system. Turn the adjusting screw until the controller displays the desired setting.

⚠ CAUTION

Do not exceed 100 psi (6.9 bar). ▲

When complete, inspect the area around the $^{5}/_{8}$" packing nut for fluid. If fluid is present, slightly tighten the nut and reinspect.

Note Should the chiller start to vibrate the valve setting may be the cause. Changing the pressure setting ± 5 psi (0.3 bar) will eliminate the vibration. ▲

P1 P2 T0 T1 Pump Pressure Relief Valve (External Configuration)

The pressure relief valve is used to set the desired system back pressure (P1) to your application. The valve is factory preset to 80 ± 5 psi (5.5 ± 0.4 bar).

The valve's inlet/outlet connections are ½"FNPT.

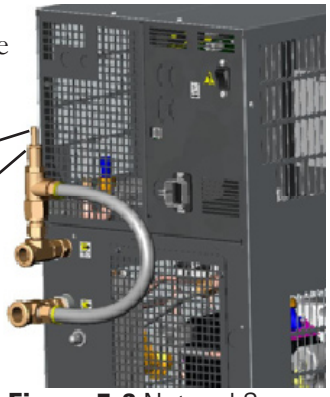

Figure 5-6 Nut and Screw

If the chiller is not plumbed to an application, set the pressure by installing a loop of hose equipped with a shut-off valve between the supply and return fittings. Start the chiller and allow it to prime, then close the valve.

Use the Status Display to display P1, it should display 80 ± 5 psi.

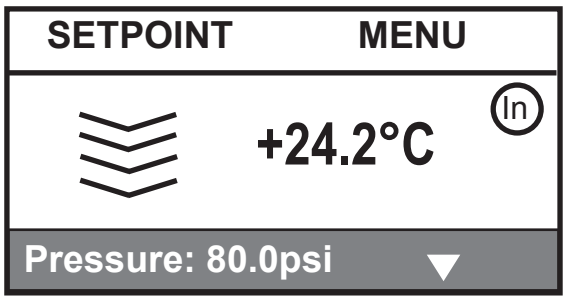

Figure 5-7 Pressure Status Display

Use a screwdriver to turn the adjusting screw (counterclockwise to reduce pressure) until the controller displays the desired setting.

Note Due to internal back pressure, the minimum pressure setting for a deadheaded pump is 40 psi (2.8 bar) for a P2 pump, and 22 psi (1.5 bar) for a P1 (these settings prohibit external flow from the chiller). ▲

If the chiller is plumbed to an application, ensure the chiller is off. Then back out the adjusting screw counterclockwise to reduce pressure. Turn the chiller on. Ensure that there is back pressure in the system. Turn the adjusting screw until the controller displays the desired setting.

⚠ CAUTION

Do not exceed 100 psi (6.9 bar). ▲

When complete, inspect the area around the $^{5}/_{8}$" packing nut for fluid. If fluid is present, slightly tighten the nut and reinspect.

Flow Control with Flow Readout

Flow control for P1, P2, T0 and T1 pumps on ThermoFlex900s - 5000s is achieved using a 3-way valve plumbed between the standard process outlet and the process inlet on the rear of the chiller. Use the auxiliary process outlet at the top left of the rear of the chiller as a connection point. The connections are ½" FNPT. See Figure 5-8.

ThermoFlex3500s and 5000s with P3 and P4 pumps use a 2-way valve located on the rear of the chiller. The connections are 3/4" FNPT. See Figure 5-9.

ThermoFlex7500s and 10000s with P2 - P5 and T5 (see next page) pumps use a valve located on the rear of the chiller. The connections are 1/2" for P2, 1" FNPT for P3 and P5. See Figure 5-9.

Use the controller's Status Display to view the flow rate. Turn the valve handle until the desired rate is displayed.

Note The valve is sensitive to slight adjustments. ▲

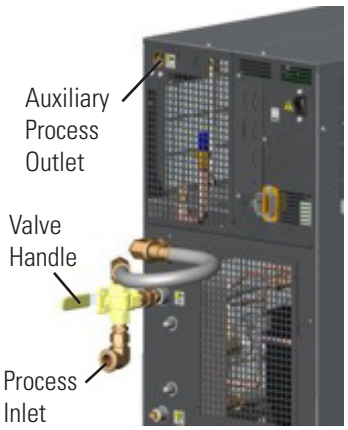

Figure 5-8 Flow Control

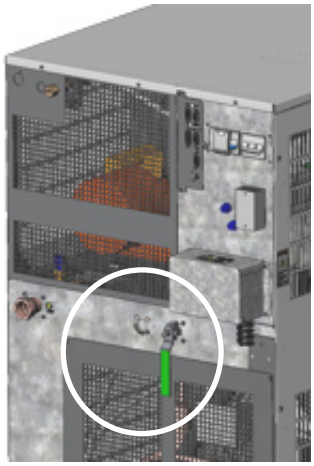

Figure 5-9 Flow Control Handle (Typical)

P1 P2 T0 T1 Pump Pressure Relief with Flow Readout

The pressure relief with flow readout works just like the pressure relief Valve discussed on the previous page. It allows you to control the pressure going to your application.

This valve is plumbed into the chiller's auxiliary port, allowing you to also monitor the flow rate to your application using the controller's Status Display.

The valve's outlet connection is ½" FNPT. See Figure 5-10.

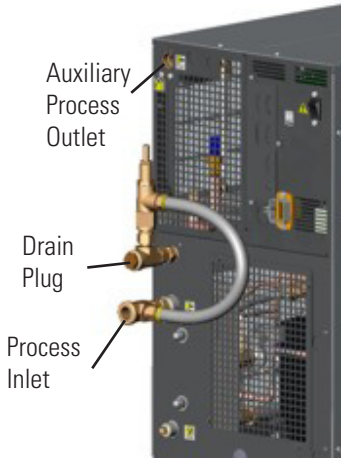

Figure 5-10 Pressure Relief

T5 Pump Flow Control

The flow control valve is used to adjust the flow rate. The valve's handle is designed with slots to identify the valve's position, from full flow to full bypass. When the slots are in the horizontal position (in line with the discharge line) the application is receiving full flow. With the slots are vertical the valve is in full bypass.

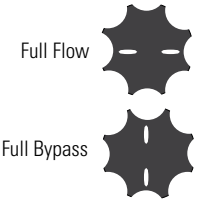

Anti Drainback

Chillers installed below the end-user application may allow system fluid to drain back into the chiller and cause spillage. The anti-drainback valve is designed to prevent any such spillage.

The valve opens just before the pump is turned on and it closes just after the pump shuts off.

This option is required if your chiller is more than 24 feet below your application, or if there is a possibility of drain back due to the occasional opening of the process lines for either application swaps or chiller servicing.

Semiconductor Equipment and Materials International (SEMI) Chillers

Compliance

SEMI chillers are compliant with:

SEMI S2-0703 Product Safety Assessment

SEMI S8-0705 Ergonomic Assessment

SEMI S14-0704 Fire Risk Assessment

SEMI F47-0706

Emergency Off (EMO)

A guarded red mushroom shaped push-button switch with twist-to-reset is provided on the chiller's front to turn it off in case of an emergency. The button head is engraved with "EMO" in large white filled letters.

Note The EMO is controlled by a safety circuit and is not influenced by the chiller's firmware/software. ▲

Activation of the EMO button will remove power from the main contactor coil stopping operation of the chiller. The controller will display **External EMO**.

Resetting the EMO button will not restart the chiller. After all hazards have been removed reset the chiller by pressing enter on the controller. In the local mode, the chiller will restart by pressing the START STOP button again. In the serial communications mode, send the appropriate start command. In the analog I/O mode, the chiller starts when the error is cleared.

Chiller Circuit Breaker Interrupt Rating

The main power circuit breaker located on the rear of the chiller has an Interrupting Capacity (AIC) of 10,000 amps.

Lockout/Tagout (LOTO)
Before performing Chiller maintenance, the energy sources associated with the chiller system must be lockedout and tagged out (LOTO). Hazard control features added to the system (e.g., safety interlocks, EMO) are not a substitute for turning off and locking out electrical or fluid energy.

For chillers rated 20 Amps or less, electrical LOTO is accomplished by removing the power cord on the rear of the chiller then closing and locking the power receptacle locking device. For other chillers, electrical LOTO is the responsibility of the user and can be provided by:

- Using the main disconnect (knife switch at system control cabinet).
- Disconnecting main power at the facility power source prior to the system controller cabinet.
- In addition, follow all OSHA and local facility LOTO directives.

Drip Pan and Drain
The chiller is equipped with a secondary containment (drip pan) in case there is a leak. The drip pan drain is located on the rear of the chiller. Install the supplied nylon 1/4 turn quick disconnect (QD) fitting into the drain fitting. The QD is barbed for a 1/2" ID hose.

Since the drip pan will not hold more than 110% of the reservoir volume, connect the drain to guide the fluid to an appropriate spillage location.

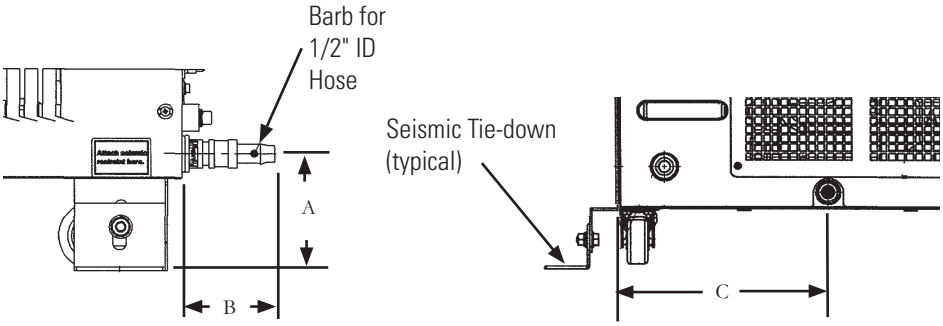

1/4 Turn Quick Disconnect Drip Pan Drain Fitting

Figure 5-11 Drip Pan Drain

	900/1400		2500		3500/5000		7500/10000	
A	3 1/2"	8.8 cm	4"	10.1 cm	3 3/8"	11.3 cm	4 1/4"	10.8 cm
B	2 3/4"	7.0 cm	2 11/16"	6.8 cm	2 3/4"	7.1 cm	2 5/8"	6.6 cm
C	6 15/16"	17.7 cm	6 9/16"	16.7 cm	9 9/16"	24.3 cm	7 11/16"	19.5 cm

Seismic Tie-Downs

Install the seismic tie-downs to the chiller as shown below. Then secure the chiller to the floor with user-supplied hardware.

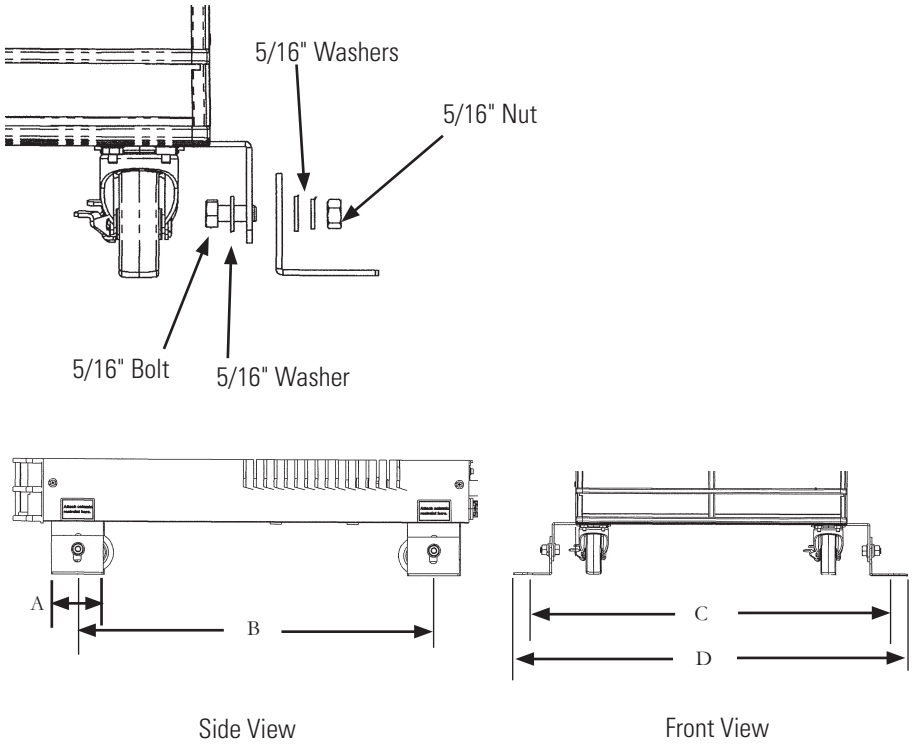

Figure 5-12 Seismic Tie-Downs

	900/1400		2500		3500/5000		7500/10000	
A	2 11/16"	6.8 cm	2 11/16"	6.8 cm	2 11/16"	6.8 cm	2"	5.1 cm
B*	18 ½ "	47.0 cm	20 1/16"	51.0 cm	24 ½"	62.2 cm	17"	43.1 cm
C*	19 11/16"	50.0 cm	22 3/4"	57.8 cm	24 3/4"	62.9 cm	27 7/16"	69.6
D	21 3/16"	53.8 cm	24 1/4"	61.5 cm	26 1/4"	66.7 cm	28 15/16"	73.4

* Distance between Ø.53 Seismic mounting holes

Center of Gravity

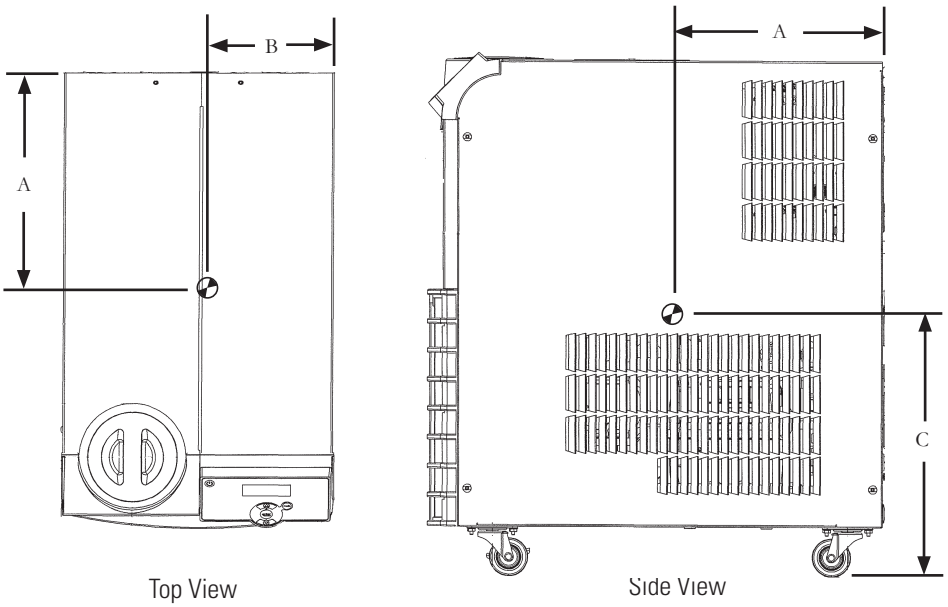

Figure 5-13 Center of Gravity

Center of Gravity ± ½", air-cooled chiller, no fluid in tank

	900/1400 P2 Pump		2500 P2 Pump		3500/5000 P2 Pump		7500/10000 P3 Pump	
A	10 3/4"	27.3 cm	12"	30.5 cm	13 3/8"	34.0 cm	14 7/8"	37.8 cm
B	6 3/4"	17.2 cm	8 3/8"	21.3 cm	9"	22.9 cm	13 1/8"	33.3 cm
C	13 1/2"	34.3 cm	13 1/2"	34.3 cm	17"	43.2 cm	26"	66.0 cm

	3500/5000 P4 Pump Global Voltage	
A	12 3/8"	31.4 cm
B	9 3/4"	24.8 cm
C	19 1/2"	49.5 cm

Center of Gravity ± ½", water-cooled chiller, no fluid in tank

	3500/5000 P2 Pump	
A	13"	33.0 cm
B	9 1/2"	24.1 cm
C	16"	40.6 cm

Weight Distribution ± 2 lbs, air-cooled chillers

	900/1400 P2		2500 P2		3500/5000 P2		7500/10000 P3	
Left Front	27.1 lbs	12.3 kg	40.7 lbs	18.5 kg	62.0 lbs	28.1 kg	97.8 lbs	44.4 kg
Left Rear	29.8 lbs	13.5 kg	42.0 lbs	19.1 kg	63.7 lbs	28.9 kg	99.9 lbs	45.3 kg
Right Front	32.9 lbs	14.9 kg	45.7 lbs	20.7 kg	68.2 lbs	30.9 kg	89.2 lbs	40.5 kg
Right Rear	36.2 lbs	16.4 kg	47.1 lbs	21.4 kg	70.0 lbs	31.8 kg	91.1 lbs	41.3 kg

Other Accessories

Installation kit - includes replacement air and fluid filters

Maintenance kit - includes a set of hoses, adaptor fittings and Teflon® tape

Fluids

Fluid treatment kit designed to minimize the effects of corrosion, scale, fouling, and microbial contamination. It allows the system to continue providing reliable service with optimal efficiency for the life of the chiller.

The kit includes a biocide and corrosion inhibitor capable of treating up to ten gallons of application water and is designed to provide protection for a period of six months. This kit is compatible with the following fluids:

- Filtered/Single Distilled Water
- Uninhibited Ethylene Glycol/Water
- Uninhibited Propylene/Water
- Deionized (DI) Water*
- Reverse Osmosis (RO) Water

*Do not use the Thermo Fisher Water Treatment Kit with a DI filtered system; the filter will remove a portion of the reagent's active ingredients limiting its effectiveness.

Please contact Thermo Fisher Scientific's Sales, Service and Customer Support to assist you with questions that you may have regarding accessories for your ThermoFlex, see inside front cover for contact information.

Section 6 Preventive Maintenance

Only Thermo Fisher should provide any required replacement parts.

Preventive Maintenance Timer (Care Level)

The ThermoFlex chiller has an integrated preventive maintenance timer that can alert you when it is time to perform preventive maintenance. This unique feature can be set to remind you to change your air and fluid filters.

Based on the environment in which your chiller is located, you can choose from four levels of preventive maintenance off, L1, L2, and L3:

- off – Disables the alert
- L1 – 1,000 hours - default setting
  - Heavy manufacturing environment
  - Airborne particulate created during manufacturing process
- L2 – 2,000 hours
  - Typical production environment
- L3 – 3,000 hours
  - Clean environment – filtered air
  - Typically laboratory or research environment

Each time the chiller exceeds the chosen time, the controller will flash **Filter PM** and, if enabled, an audible alarm will sound.

Change/set the level using the controller's **DIAGNOSTICS** menu, see next page.

To clear this message press 

. This will temporarily clear the alarm until the chiller is restarted. To permanently clear the alarm the filter run time hours must be reset in the **DIAGNOSTICS** menu. Also, if you change your filters before the preventive timer trips, you can clear the timer by using the **DIAGNOSTICS** menu.

Note For air-cooled chillers, both the air and fluid filters in the ThermoFlex can be changed while the chiller is running. For water-cooled chillers, only the fluid filter can be changed while it is running. ▲

DIAGNOSTIC - OPERATING HOURS

OPERATING HOURS displays the chiller (**Unit**), filter and optional DI cartridge operating hours. The display is also used to select the preventive maintenance schedule (**Care Level** and optional **De-I Period**).

1. Use the arrow buttons to highlight **OPERATING HOURS**.

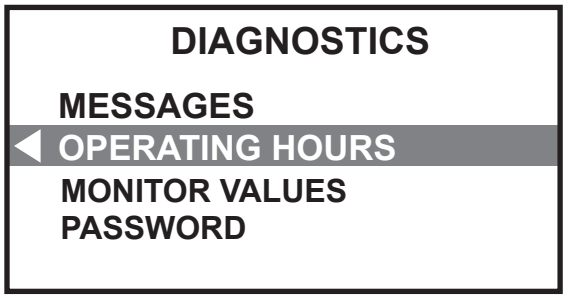

2. Press enter to display:

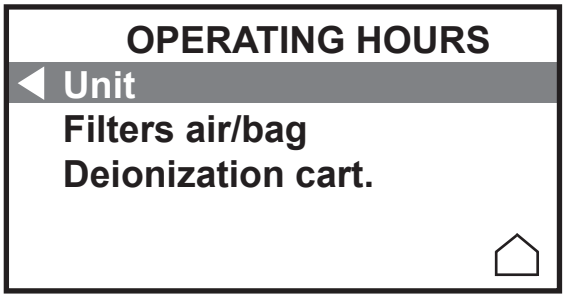

3. Highlight the desired item and press enter to bring up one of the displays shown on the right:

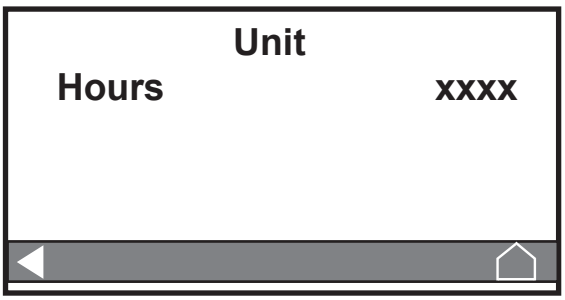

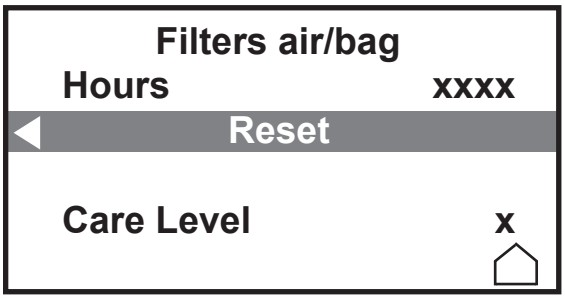

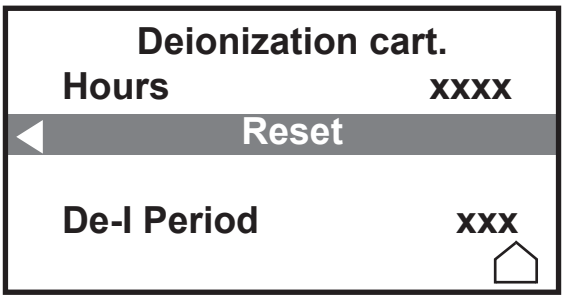

(Optional Display)

4. With **Reset** highlighted, press enter to reset the filter and cartridge operating hours to zero. You cannot reset the chiller's operating hours.

5. Use the arrow buttons to highlight **Care Level**. Press enter and the display will flash. Use the arrow buttons to display the desired care level and then press enter again to stop the flashing and accept the new value.

6. The optional **De-I Period** is the operating time needed to display the **DI** message. Use the arrow buttons to highlight **De-I Period**. Press enter and the display will flash. Use the arrow buttons to display the desired time, from 0 to 9999 hours. Press enter again to stop the flashing and accept the new value.

Fluid Filter Bag

The reservoir has a fluid bag filter designed to prevent the introduction of particulates into the system.

Note The fluid bag filter can be removed with the chiller operating. ▲

WARNING

Before using any fluid or performing maintenance where contact with the fluid is likely refer to the manufacturer's MSDS for handling precautions. ▲

For high-temperature chillers, ensure the fluid is at a safe temperature (below 40°C) before handling. ▲



When it is time to replace the bag, gently pull up on the plastic funnel housing to remove it and simply pull the bag out of the chiller. Replacement bags are available from Thermo Fisher Scientific.

Figure 6-1 Fluid Filter Bag

CAUTION

Before replacing the reservoir housing ensure the reservoir sight tube ball stopper is securely in place, see next page. ▲

Fluid Diffuser

On ThermoFlex900-5000s, when you remove the bag you will notice a wire mesh fluid diffuser inside the reservoir supply line, see Figure 6-2. The diffuser is used to help streamline the flow into the reservoir. After several bag replacements turn the chiller off and remove the diffuser to inspect it for debris/damage.

WARNING

The fluid velocity into the reservoir will rapidly increase with the diffuser removed and cause splashing. Turn the chiller off before removing the diffuser. This is especially critical when using ethylene or propylene glycol. ▲

Note To prevent particulates from entering the reservoir, ensure the fluid bag filter is in place before removing the diffuser. ▲

CAUTION

Do not operate the chiller unless the diffuser is installed. ▲

Fluid Maintenance

An effective recommended maintenance plan would include changing the fluid every six months to optimize chiller reliability, see Section 3 for additional information.

Reservoir Cleaning

The user is responsible for maintaining reservoir fluid quality. Check the fluid on a regular interval. Start with frequent checks until a regular interval (based on your application) is established.

If cleaning is necessary, flush the reservoir with a fluid compatible with the process fluid and the chiller's wetted parts, see Section 8.

⚠ WARNING

Before using any fluid or performing maintenance where contact with the fluid is likely refer to the manufacturer's MSDS for handling precautions. ▲

For high-temperature chillers, ensure the fluid is at a safe temperature (below 40°C) before handling. ▲

Reservoir Sight Tube

Clean the sight tube by gently pulling up on the plastic funnel housing to remove it (see illustration on previous page) and then gently pulling out the black sight ball stopper from the tube. Use a long soft-bristle ¼" brush. Use caution not to scratch the glass.

⚠ CAUTION

Before replacing the reservoir housing ensure the reservoir sight tube ball stopper is securely in place. ▲

For easier replacement, wet the stopper first and then use a twisting motion to install it in the sight tube.

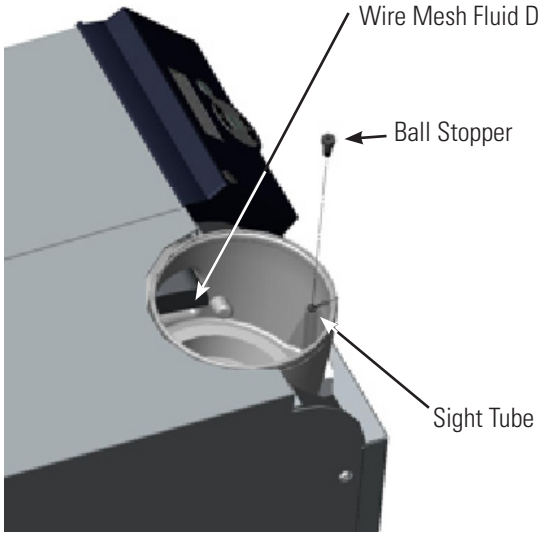

Figure 6-2 Reservoir Cleaning and Diffuser

Condenser Filter

CAUTION

Failure to clean/replace the condenser filter will cause a loss of cooling capacity and lead to premature failure of the cooling system. ▲

ThermoFlex900s - 5000s
Clean the filter through the grill using a vacuum with a soft-bristle brush.

When it is time for a more thorough cleaning, remove the one-piece grill assembly by first pulling the bottom of the assembly away from the chiller and then pulling it away from the top.

WARNING

The condenser framing and fins located behind the grill assembly are very sharp. Use caution when removing the assembly. ▲

Note ThermoFlex900s - 5000s water-cooled chillers have an embedded screw(s) located at the top (and bottom) of the grill securing it to the chiller. Loosen the screw(s) to remove the grill. ▲

WARNING

Water-cooled chillers also have a fan with sharp blades, ensure the chiller is off before removing the assembly. ▲

Shake off as much of the excess water as possible before reinstalling. Press the grill back into place.

For water-cooled chillers, tighten the screw(s) at the top (and bottom) of the grill.

Replacement grill assemblies are available from Thermo Fisher.

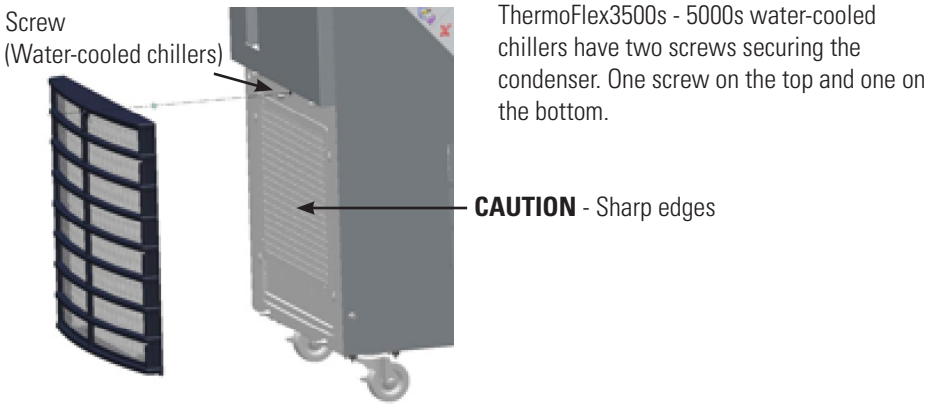

Figure 6-3 ThermoFlex900s - 5000s Condenser Grill Removal

ThermoFlex7500s - 10000s
For air-cooled chillers, remove the one-piece grill assembly by pulling the assembly away from the chiller.

Water-cooled chillers do not have a filter.

The filter goes over four studs and plastic "fast nuts" that hold it in place.

Replace it or vacuum the old filter with a soft-bristle brush, or wash it. Shake off as much of the excess water as possible before reinstalling.

Tuck the filter around the perimeter of the grill and over the four studs, use the plastic "fast nuts" to hold it in place.

Replacement grills are available from Thermo Fisher.

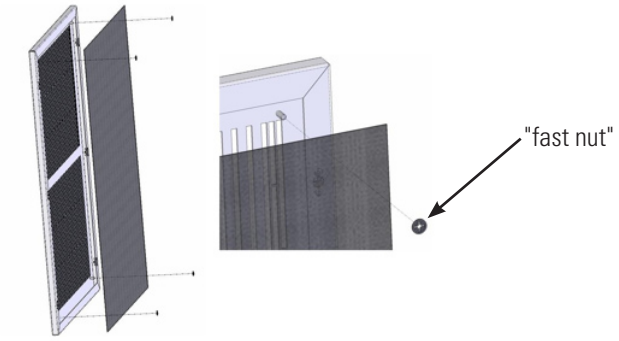

Figure 6-4 Filter Removal/Replacement ThermoFlex7500s - 10000s Air-Cooled

Chiller Surface

Clean the chiller's surface with a soft cloth and warm water only.

Hoses

Inspect he chiller's external hoses and clamps on a daily basis.

Testing the Alarm Features

Using the Setup Loop, adjust each temperature alarm limit towards the setpoint and ensure the chiller reacts accordingly. Reset each alarm limit to the desired value. See Section 4.

We recommend slowly draining the chiller to ensure the low level warning and fault messages activated. See Section 8.

For chillers equipped with auto refill switch we recommend slowly draining and ensure the auto refill activates.

DI Filter (Optional)

Establish a preventive maintenance schedule for the DI filter cartridge based on your specific application.

The controller will display a **High Resistivity** or a **Low Resistivity** warning message when the process fluid resistivity exceeds the limit set in the controllers **RESISTIVITY SETTINGS** display, see Section 4.

The chiller also has an integrated alarm. The alarm is based on chiller run hours that will alert you when it is time to change your filter. The alarm is enabled using the controller's **DIAGNOSTICS** menu.

If you already know how often your DI filter needs changing, you can input the number of hours into the menu. When the time is reached, the controller will flash **DEI PM** and the audible alarm, if enabled, will sound.

To clear this message and stop the audible alarm press 

.

Preventive Maintenance Messages

The controller also displays Preventive Maintenance Messages. These messages are based on the component run time and are established to avoid unplanned failures. The chiller will continue to run.



Figure 6-5 Sample PM Message

Filter PM	**Fluid Filter Bag and Condenser Filter**
DEI PM	**Optional DI Filter**
XXXXX Run Hours	**Chiller operating hours (appears every 20,000 hours)**

You can press the enter key to clear any message Note the message because once the Filter or DEI PM message is cleared it will not reappear.

Section 7 Troubleshooting

Messages

WARNING and FAULT Messages are a result of exceeding one of the controller's SETTINGS, see Section 4, exceeding a sensor factory preset safety value. or a safety switch is activated. An ERROR Message indicates an unusual condition. In the case of an ERROR or WARNING Message the chiller, if running, will continue to run. Press **enter** to see if the message clears, a limit may have been only temporarily exceeded. In the case of a FAULT Message the chiller will shut down and the controller will continue to flash the message. Press **enter** to clear the display and, if enabled, silence the alarm. Once the cause of the shut down is identified and corrected, restart the chiller. If the cause was not corrected the message will reappear.

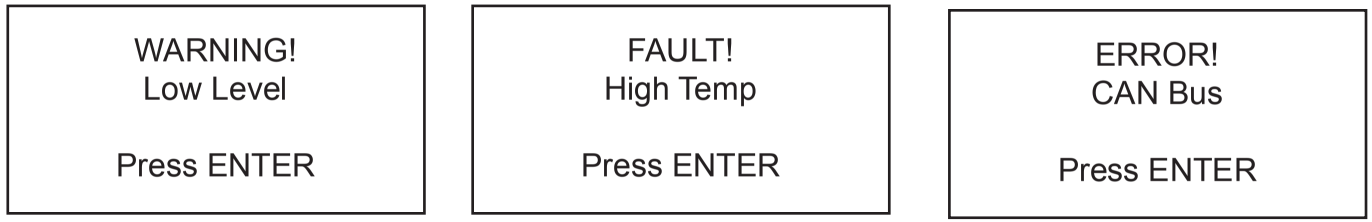

Figure 7-1 Sample Messages

Faults and Warnings

Message	Reaction	Cause	Actions
Auto Refill	The chiller will continue to run. Auto refill, if installed, will shut down. (Optional display - only chillers equipped with auto refill.)	The auto refill did not reach the minimum operating level within the time chosen for the customer adjustable *fill* setting. The auto refill successfully filled within the time frame chosen for the customer adjustable *fill* setting, but the chiller tries to refill 5 times in 40 hours.	• Check for leaks. • Check the supply pressure on the auto refill supply line. With low pressure the auto refill time span setting may be set too low and the reservoir does not have time to fill. Verify controller's **SETTINGS**, see Section 4. • Add fluid to the tank. • Contact our Sales, Service and Customer Support.
Bad Calibration Data	Chiller continues to run.	Bad sensor calibration detected several seconds after performing a calibration.	• Redo calibration, see Section 8. • Contact our Sales, Service and Customer Support.

Faults and Warnings

Message	Reaction	Cause	Actions
Drip Pan	Chiller will shut down. (SEMI chillers only)	Fluid in the drip pan.	• Check for leaks. • Remove the fluid from the drip pan and reset the fault. • Contact our Sales, Service and Customer Support.
External EMO	Chiller will shut down. (SEMI chillers only)	External EMO depressed.	• When able, reset external EMO..
Fan Motor Overload	Chiller will shut down. (3-Φ chillers only)	Fan motor overload activated.	• Allow chiller to cool down. • For air-cooled chillers, clean air filter, see Section 6. • Contact our Sales, Service and Customer Support.
High Fixed Flow	Chiller will shut down. (Optional display - only chillers equipped with a flow transducer.)	The process fluid flow exceeded the *factory preset* high value.	• Check all application and plumbing shut off valves for correct position. • Adjust flow, if chiller is equipped with an optional flow control valve, see Section 5. • If flow transducer was recently calibrated double check calibration, see Section 8. • Contact our Sales, Service and Customer Support.
High Fixed Pressure	Chiller will shut down. This error code has priority over **High Pressure** error code.	Process pressure (P1) exceeded *factory preset* value for greater than 30 seconds. Preset Values: P1, P2 and T1- 105 psi P3 60 Hz - 48 psi P3 50 Hz - 32 psi P4 60 Hz - 85 psi P4 50 Hz - 60 psi P5 60 Hz - 87 psi P5 50 Hz - 56 psi	• Check application valves and ensure that they have not changed or been closed. **Note** If routine shut-off of the process flow is required then add an external pressure regulator accessory - contact Thermo Fisher. ▲ • May occur as a result of changing the internal DI cartridge. Disconnecting the cartridge adds an additional 0.5 GPM to the main flow, see Section 5. • Check for debris in the application or clogged external filters. • Double check fluid lines. Excessive bends, long tubing and diameter reductions can affect the pump's discharge pressure. **Note** If diameter reductions must be made, make them at the inlet and outlet of your application, not at the chiller. ▲ • Contact our Sales, Service and Customer Support.

Faults and Warnings

Message	Reaction	Cause	Actions
High Fixed Temp	Chiller will shut down. This error code has priority over **High Temp** error code. **Note** Chiller will not restart until process fluid temperature is below +43°C (+93°C for high-temp chillers). ▲	Reservoir fluid temperature exceeded the *factory preset* value of +43°C (+93°C for high-temp chillers).	• Ensure all environmental requirements are met, see Section 3. • Ensure chiller has adequate ventilation, see Section 3. • Clean air filter. Dirt and debris on filter can prevent the chiller from functioning at full capacity, see Section 6. • Ensure that the heat load being applied to the chiller is not too high. Contact Thermo Fisher for assistance on calculating heat loads. • Bring cooler air in from another area or exhaust the hot air into another location using an auxiliary fan. • Verify/adjust controller PID values, see **TUNING** in this Section. • Contact our Sales, Service and Customer Support.
High Flow	With a warning message the chiller will continue to run. With a fault message the chiller will shut down. (Optional display - only chillers equipped with a flow transducer.)	The process fluid flow rate has exceeded the adjustable setting's high value.	• If the chiller is still running press enter to see if the code clears, the limit may have been only temporarily exceeded. • Verify **SETTINGS**, see Section 4, and adjust setting if necessary. • Check all application and plumbing shut off valves for correct position. • Adjust flow, if chiller is equipped with an optional flow control valve, see Section 5. • If flow transducer was recently calibrated double check calibration, see Section 8. • Contact our Sales, Service and Customer Support.

Faults and Warnings

Message	Reaction	Cause	Actions
High Pressure	With a warning message the chiller will continue to run. With a fault message the chiller will shut down.	The pump's discharge pressure exceeded the adjustable high value.	• If the chiller is still running press enter to see if the message clears, the limit may have been only temporarily exceeded. • Verify controller's **SETTINGS**, see Section 4. • Check application valves and ensure that they have not changed or been closed. **Note** If routine shut-off of the process flow is required then add an external pressure relief valve, see Section 5. ▲ • Check for debris in the application or external filters. • May occur as a result of changing the internal DI cartridge. Disconnecting the cartridge adds an additional 0.5 gpm to the main flow, see Section 5. • Double check fluid lines. Excessive bends, long tubing and diameter reductions can affect the pump's discharge pressure. **Note** If diameter reductions must be made, make them at the inlet and outlet of your application, not at the chiller. ▲ • Contact our Sales, Service and Customer Support.
High RA Temperature	Chiller will shut down.	Refrigeration suction gas temperature exceeded 50°C.	• Make sure supply voltage matches the chiller's nameplate rating ±10%. • Contact our Sales, Service and Customer Support.
High Resistivity	Chiller will continue to run. (Optional display)	The process fluid resistivity exceeded the upper adjustable value.	• Press enter to see if the message clears, the limit may have been only temporarily exceeded. • Verify controller's **SETTINGS**, see Section 4. • Replace DI filter and/or process fluid. • Contact our Sales, Service and Customer Support.

Faults and Warnings

Message	Reaction	Cause	Actions
High Temp	With a warning message the chiller will continue to run. With a fault message the chiller will shut down. **Note** If the chiller does shut down it can be restarted provided the temperature is still within the factory-set high fixed temperature limit. However, the error will reoccur if the temperature goes below the adjustable setting and then again exceeds it. ▲	The process fluid temperature exceeded the adjustable high value.	• If the chiller is still running press enter to see if the message clears, the limit may have been only temporarily exceeded. • Verify controller's **SETTINGS**, see Section 4. • Ensure tall environmental requirements are met, see Section 3. • Ensure chiller has adequate ventilation, see Section 3. • Clean air filter. Dirt and debris on filter can prevent the chiller from functioning at full capacity, see Section 6. • Ensure that the heat load being applied to the chiller is not too high. Contact Thermo Fisher for assistance on calculating heat loads. • Bring cooler air in from another area or exhaust the hot air into another location using an auxiliary fan. • Verify/adjust controller PID values, see **TUNING** in this Section. • Contact our Sales, Service and Customer Support.
HPC	Chiller will shut down.	High refrigeration pressure cutout activated.	**Air-cooled chillers** • Ensure that the ambient temperature is not exceeding the recommended range, see Section 3. • Ensure chiller has adequate ventilation, see Section 3. • Clean air filter, see Section 6. • Bring cooler air in from another area or exhaust the hot air into another location using an auxiliary fan. • Contact our Sales, Service and Customer Support. **Water-cooled chillers** • Ensure facility water is on and connected. • Check facility water flow rate and pressure. • Contact our Sales, Service and Customer Support.
HTC	Chiller will shut down.	High heater temperature.	• Allow heater to cool and then remove the small black plastic cap(s) on the rear of the chiller, press the reset node(s) until you hear a "click". See **Checklist** in this Section. • Contact our Sales, Service and Customer Support.

Faults and Warnings

Message	Reaction	Cause	Actions
Invalid Level	Chiller will shut down.	Invalid level fault. Chiller sensed both a high level and low level reservoir fluid level.	• Contact our Sales, Service and Customer Support.
Invalid rem setpt	Chiller will continue to run using the last valid setpoint received. (Optional display - only chillers equipped with Analog I/O).	Analog remote setpoint is enabled and the chiller receives a voltage or current level that is outside the chiller's set point range.	• The error can be cleared only after a valid set point is received, or the remote analog setpoint is turned off.
LLC	Chiller will shut down.	Low Level Cutout activated.	• Check for leaks. • Contact our Sales, Service and Customer Support.
Local EMO	Chiller will shut down. (Optional display)	Chiller's EMO button depressed.	• When able, reset chiller's EMO.
Low Fixed Flow	Chiller will shut down. (Optional display - only chillers equipped with a flow transducer) (This error code has priority over **Low Flow.**)	Low flow fault. For chillers with a P1, P2 or T1 pump the flow dropped below 0.8 GPM for more than 15 seconds. For chillers with a P3, P4 or P5 pump the flow dropped below 3.8 GPM for more than 15 seconds.	• Adjust flow, if chiller is equipped with an optional flow control valve, see Section 5. • Check all valves in your application and plumbing lines to ensure that they have not changed or closed. • If flow transducer has recently been calibrated, double check calibration to ensure it was done properly, see Section 4. • Contact our Sales, Service and Customer Support.
Low Fixed Pressure	Chiller will shut down. (This error code has priority over **Low Pressure.**)	Process pressure (P1) below *factory preset* low limit of 2 psi for greater than 15 seconds.	• Ensure that the chiller reservoir is not empty. • Chiller requires >2 PSIG application pressure drop. If a bypass valve has been installed, some restriction may need to be added to the bypass line. • Contact our Sales, Service and Customer Support.

Faults and Warnings

Message	Reaction	Cause	Actions
Low Fixed Temp	Chiller will shut down. **Note** Chiller will not restart until process fluid temperature exceeds +2°C. ▲ (This error code has priority over **Low Temp.**)	Reservoir fluid temperature below the *factory preset* low value of +2°C.	• Check ambient temperature. Chiller may not to be able to reach setpoint at low ambient temperatures. If your load is constant, then turn your chiller on. Chiller will control setpoint when sufficient heat is added. • Verify/adjust controller PID values, see **TUNING** in this Section. • Add insulation to external plumbing lines to reduce the heat-loss to the environment. • Ensure that the ambient temperature is not exceeding the recommended range, see Section 3. • For water-cooled chillers check facility water temperature. • Contact our Sales, Service and Customer Support.
Low Flow	With a warning message the chiller will continue to run. With a fault message the chiller will shut down. (Optional display - only chillers equipped with a flow transducer.)	The process fluid flow rate has gone below the adjustable setting's low value.	• If the chiller is still running press enter to see if the code clears, the limit may have been only temporarily exceeded. • Verify controller's **SETTINGS**, see Section 4. • Adjust flow, if chiller is equipped with an optional flow control valve, see Section 5. • Check all valves in your application and plumbing lines to ensure that they have not changed or closed. • If flow transducer has recently been calibrated, double check calibration to ensure it was done properly, see Section 4. • Contact our Sales, Service and Customer Support.
Low Level	With a warning message the chiller will continue to run. With a fault message the chiller will shut down.	Reservoir fluid level too low for normal operation.	• Excessive evaporation. Ensure the chiller is operating with the funnel and cap in place. • Check for leaks. • Check auto refill operation, see Section 5. • Check the supply pressure on the auto refill supply line. With low pressure the auto refill time span setting may be set too low and the reservoir does not have time to fill. Verify controller's **SETTINGS**, see Section 4. • Contact our Sales, Service and Customer Support.

Faults and Warnings

Message	Reaction	Cause	Actions
Low Pressure	With a warning message the chiller will continue to run. With a fault message the chiller will shut down.	Pump's discharge pressure is below adjustable low setting.	• If the chiller is still running press enter to see if the message clears, the limit may have been only temporarily exceeded. • Verify controller's **SETTINGS**, see Section 4. • Ensure that chiller reservoir is not empty. • Chiller requires >3 PSIG application pressure drop. If a bypass valve has been installed, some restriction may need to be added to the bypass line. • Contact our Sales, Service and Customer Support.
Low Resistivity	Chiller will continue to run. (Optional display)	The process fluid resistivity exceeded the lower adjustable value.	• Press enter to see if the message clears, the limit may have been only temporarily exceeded. • Verify controller's **SETTINGS**, see Section 4. • Replace DI filter and/or process fluid. • Contact our Sales, Service and Customer Support.
Low Temp	With a warning message the chiller will continue to run. With a fault message the chiller will shut down. **Note** If the chiller does shut down it can be restarted provided the temperature is still above the factory-set low fixed temperature limit. However, the error will reoccur if the temperature goes above the adjustable setting and then again drops below it. ▲	Process fluid temperature is below adjustable low value.	• If the chiller is still running press enter to see if the code clears, the limit may have been only temporarily exceeded. • Verify controller's **SETTINGS**, see Section 4. • Ensure that the ambient temperature is not exceeding the recommended low-range, see Section 3. If your application load is constant and/or the lower temperature can be temporarily tolerated, then continue operation. (The ThermoFlex will control setpoint when sufficient heat is added.) • Add insulation to external plumbing lines to reduce the heat-loss to the environment. • For water-cooled chillers check facility water temperature. • Contact our Sales, Service and Customer Support.
LPC	Chiller will shut down.	Low refrigeration pressure cutout switch activated.	• Check for refrigerant leak. • Contact our Sales, Service and Customer Support.

Faults and Warnings

Message	Reaction	Cause	Actions
Open RTD	Chiller will shut down.	Internal sensor open.	• Contact our Sales, Service and Customer Support.
Open Remote RTD	Chiller will shut down.	Remote temperature sensor not connected or open.	• Check the connections on the rear of the chiller. • Contact our Sales, Service and Customer Support.
Over Flow	Chiller will shut down.	There is an overflow condition in the reservoir.	• Ensure the reservoir was not filled above the MAX LEVEL line. • Check for clogged reservoir filter. • Contact our Sales, Service and Customer. Support.
Shorted Remote RTD	Chiller will shut down.	Remote temperature sensor shorted.	• Check the connections on the rear of the chiller. • Contact our Sales, Service and Customer Support.
Shorted RTD	Chiller will shut down.	Internal sensor shorted.	• Contact our Sales, Service and Customer Support.
Motor Overload	Chiller will shut down. (Chiller equipped with 3-Φ pump motor overload)	Pump motor exposed to excessive current due to high pressure, flow or ambient temperature.	• Allow pump to cool down. • Contact our Sales, Service and Customer Support.
Phase Monitor	Chiller will shut down. (3-Φ chillers only)	Phase rotation is wrong.	• Disconnect chiller from power source and reverse any two line conductors on the line side of the main circuit breaker. • Contact our Sales, Service and Customer Support.
UNIT FAULT	Chiller will shut down.	Critical error.	• Contact our Sales, Service and Customer Support.

Error

Message	Reaction	Cause	Actions
Async Rec Err Int	Chiller will continue to run.	Communication error between display and main control board.	• Check the serial communication connection. • Cycle circuit protector on the rear of the chiller off and on. • Contact our Sales, Service and Customer Support.
CAN Bus	Chiller will continue to run.	Internal communications error.	• Contact our Sales, Service and Customer Support.
I2C Bus	Chiller will continue to run.	Internal communications error.	• Contact our Sales, Service and Customer Support.
NO 5V CAL	Chiller will continue to run.	No 5V calibration stored in controller memory.	• Contact our Sales, Service and Customer Support.
NO PRES CAL	Chiller will continue to run.	No pressure calibration stored in controller memory.	• Perform a pressure calibration, see Section 8. • Contact our Sales, Service and Customer Support.
NO RTD CAL	Chiller will continue to run.	No temperature calibration stored in controller memory.	• Perform a temperature calibration, see Section 8. • Contact our Sales, Service and Customer Support.
NVS 3 4 RESET	Chiller will not start.	Bad checksum when chiller is started. (Normal when new software is installed.)	• Press enter to try and clear the message. • Try a restart. • Contact our Sales, Service and Customer Support.
SENSE 5V	Chiller will continue to run.	Voltage out of tolerance.	• Contact our Sales, Service and Customer Support.

MESSAGES displays the ten most recent warnings and faults. The date and time each error occurred is shown. The alarm value is also displayed. Use the arrow buttons to scroll through the list of messages. Press the enter key to show the deletion options, **Single** or **All**. Choose **Single** to delete the selected error or **All** to delete all errors in the category. Press the enter key to show the delete confirmation screen. Finally, press the enter key again to make the deletion.

1. From the Main Menu display use the arrow buttons to highlight **DIAGNOSTICS**.

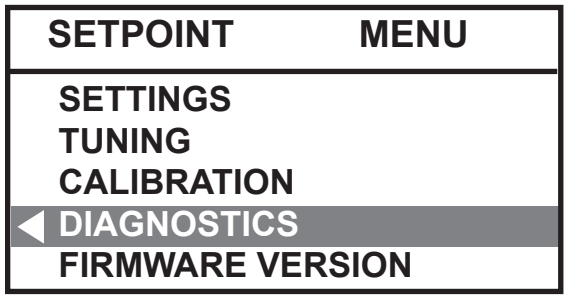

2. Press enter and use the arrow buttons to highlight **MESSAGES**.

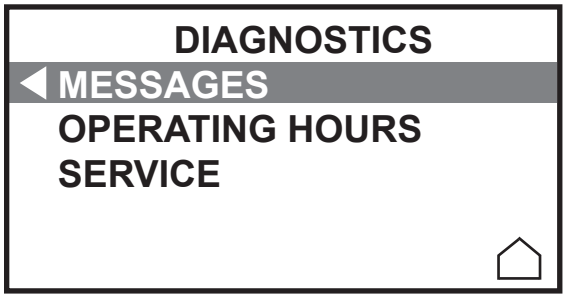

3. Press enter to display:

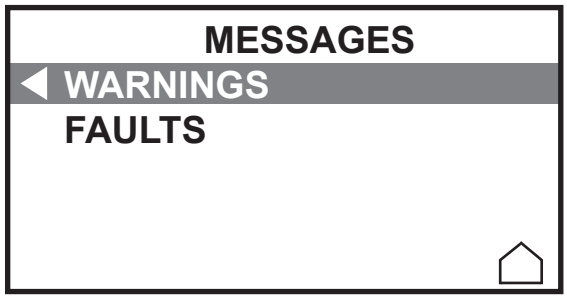

4. Highlight the desired type message and press enter again to display:

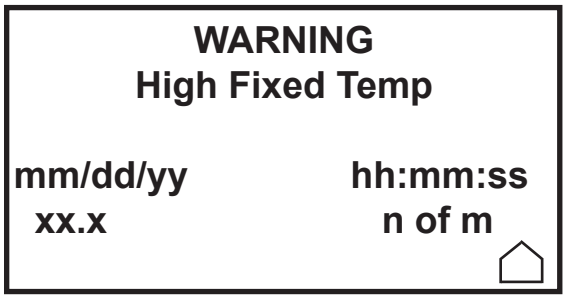

5. If desired, press enter again to display:

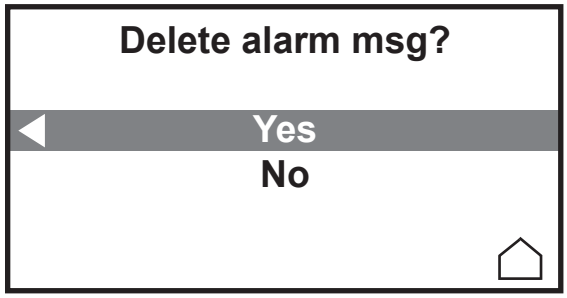

6. If **Yes** is selected press enter again to display:

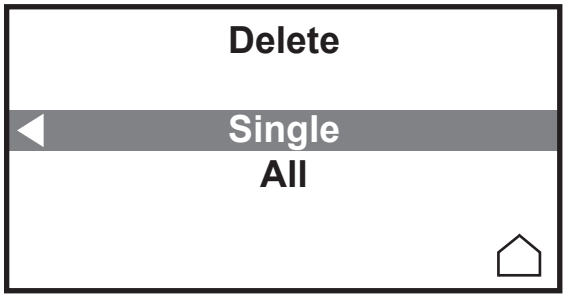

For either message type, if there aren't any messages the display will indicate:

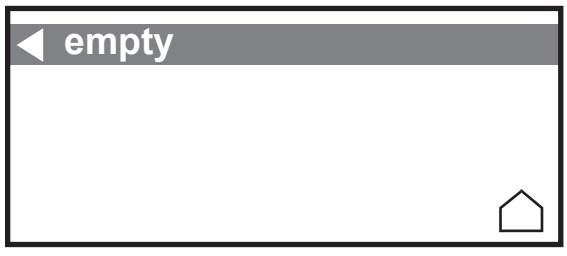

Checklist

Chiller will not start

Check the electrical connections.

For first time use, please refer to the quick start instructions included with your chiller or the copy in this manual. The manual's copy follows the Table of Contents.

Check the controller for messages, see Messages in this Section.

Ensure the circuit protector is in the on (I) position.

Make sure supply voltage is connected and matches the chiller's nameplate rating ±10%

Chiller shuts down

Check the electrical connections.

Ensure  button wasn't accidently pressed.

Ensure the circuit protector is in the on (I) position.

Check the controller for messages, see Messages in this Section.

The chiller is designed to shut down if not properly primed, refer to Section 3 for priming instructions.

Make sure supply voltage is connected and matches the chiller's nameplate rating ±10%.

Restart the chiller.

Clearing Messages

Note the code in case it clears before you are done troubleshooting.

If desired, silence the audible alarm by pressing enter.

If the chiller shut down the controller will continue to display the message. Press **enter** to clear the display and silence any alarm. Refer to Messages in this section. Once the cause of the shut down is identified and corrected, start the chiller. If the cause was not corrected the message will reappear.

If the chiller is still running press **enter** to see if the message clears, a limit may have been only temporarily exceeded. If the message does not clear refer to Messages in this Section.

Inadequate pump pressure

Ensure any user installed in-line valves are in the desired position.

Ensure the chiller's process fluid outlet is connected to the application's fluid inlet and not the application's fluid outlet, see Section 3.

Ensure all connections are secure and that the proper sealant/lubricant for the fitting material is used.

Keep the distance between the chiller and the instrument being cooled as short as possible.

Ensure tubing is straight and without bends. If diameter reductions are required, make them at the inlet and outlet of your application, not at the chiller.

Chiller will not circulate process fluid

Check the reservoir level. Fill, if necessary.

Ensure the reservoir bag filter is not clogged.

Check the application for restrictions in the cooling lines.

Chiller requires >3 PSIG application pressure drop. If a bypass valve has been installed, a restriction may need to be added to the bypass line.

The pump motor overloaded. The pump's internal overtemperature overcurrent device will shut off the pump causing the flow to stop. This can be caused by low fluid, debris in system, operating chiller in a high ambient temperature condition or excessively confined space. Allow time for the motor to cool down.

Make sure supply voltage matches the chiller's nameplate rating ±10%.

Inadequate temperature control

Adding fluid that has a temperature differential with the fluid already in the reservoir will temporarily affect temperature stability performance.

Verify the setpoint.

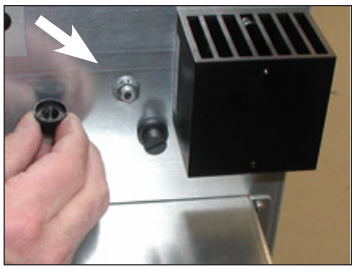

For high-temperature chillers check the heater's high temperature safety. Remove the two small black plastic covers on the rear of the chiller and press on each of the black stems. If the safety activated you should hear a "click." If it activates again contact us.

If the chiller is over-cooling, recycle the power.

Make sure the condenser/air filter is free of dust and debris.

Check the fluid concentration, see Section 3.

Ensure your chiller's installation complies with the site requirements listed in Section 3.

Make sure supply voltage matches the chiller's nameplate rating ±10%. For ThermoFlex900 - 5000 Global Voltage chillers ensure it is properly configured, see Appendix B.

If the temperature continues to rise, make sure your application's heat load does not exceed the rated specifications.

Check for high thermal gradients (i.e., the application load is being turned on and off or rapidly changing).

If operating at high altitude note that heat removal capacity decreases 1.2% per 1,000 feet above sea level. Also, reduce the maximum temperature for the air entering the ThermoFlex by 1°C per 1,000 feet above sea level.

Verify/adjust controller PID values, see next page. Ensure the chiller was shut down properly, see Section 4. If not the compressor may be damaged.

Chiller vibration

The optional pressure relief valve setting may be the cause. If it is, change the pressure setting ± 5 psi to eliminate the vibration.

Please contact Thermo Fisher Scientific Sales Service and Customer Support if you need any additional information, see inside cover for contact instructions.

TUNING

Verifying/ Adjusting the Controller PID Values

The controller controls temperature using a Proportional-Integral-Derivative (PID) algorithm. Should your chiller experience temperature control issues, verifying/adjusting the controller's PID values may correct the condition.

Note Thermo Fisher recommends that only a qualified technician adjust the PID values. Incorrect values will hamper chiller performance. ▲

1. From the Main Menu display use the arrow buttons to highlight **TUNING**.

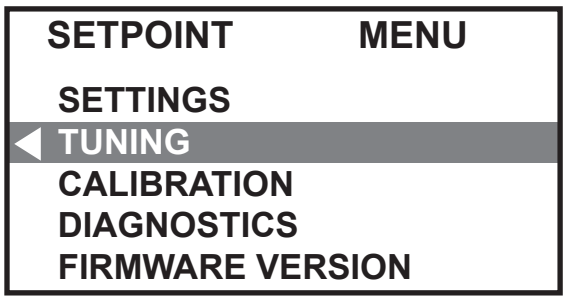

2. Press enter and highlight **COOL PID** or **HEAT PID**.

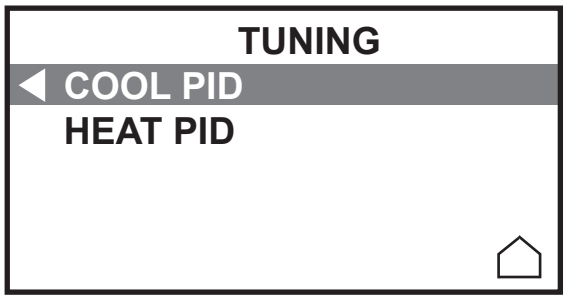

Note HEAT PID only appears on chillers equipped with a heater. ▲

3. Highlight and change the desired values as required.

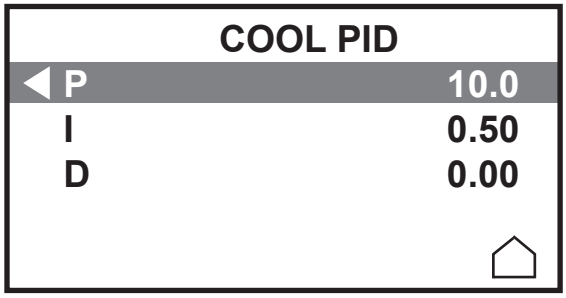

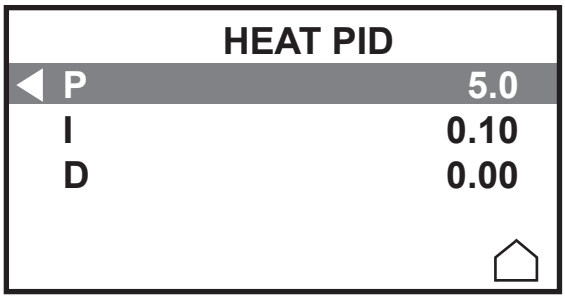

COOL

P proportional value, % of span (100°C)
Range: 0.0 to 99.9
Factory Preset: **ThermoFlex900-5000** 10.0
ThermoFlex7500-10000 20.0

I integral value, repeats/minute
Range: 0.00 to 9.99
Factory Preset: **ThermoFlex900-10000** 0.50

D derivative value, minutes
Range: 0.0 to 9.9
Factory Preset: **ThermoFlex900-10000** 0.0

HEAT

P proportional value, % of span (100°C)
Range: 0.0 to 99.9
Factory Preset: **ThermoFlex900-10000** 5.0

I integral value, repeats/minute
Range: 0.00 to 9.99
Factory Preset: **ThermoFlex900-10000** 0.10

D derivative value, minutes
Range: 0.0 to 9.9
Factory Preset: **ThermoFlex900-10000** 0.0

Section 8 Additional Information

Draining

WARNING

Before using any fluid or performing maintenance where contact with the fluid is likely refer to the manufacturer's MSDS for handling precautions. ▲

Ensure the fluid is below the safe-handling temperature (below 40°C) before draining the chiller. ▲

There are two different types of drain port, a ¼" brass Male NPT pipe plug or a ¼" MPT Riton fitting. If your chiller has both use the Riton fitting.

Position a suitable pan beneath the drain port at the rear of the chiller. The drain pan must be shallow (under 3½" in height) and have a volume of approximately 3 gallons (6 gallons for ThermoFlex7500 - 10000). Remove the ¼" Male NPT pipe plug from drain port or open the Riton fitting by turning either counter clock wise. For ThermoFlex7500-10000, open the drain valve. This will drain the return line, reservoir, plate exchanger, and the suction side of the pump.

To drain the discharge side of the pump disconnect the Female NPT outlet connection on the rear of the chiller.

Note Internally the chiller does not contain a large quantity of fluid on the discharge side however take care to contain what fluid does drain, a wet-vac can be employed to minimize the potential for spillage. ▲

If the chiller is equipped with the flow control or pressure relief with flow control option, open the valve or remove the drain plug in order to drain the discharge line, see Section 5.

If the chiller is equipped with the anti drainback option, use the controller's **SETTINGS** menu to open the valve, see Section 4. Opening the valve allows the fluid to drain out of the chiller.

Reinstall ¼" Male NPT pipe plug using a sealant suitable for the wetted materials or close the Riton filling prior to refilling the chiller.

CAUTION

Do not overtighten the fitting. ▲

For ThermoFlex7500-10000, close the drain valve.

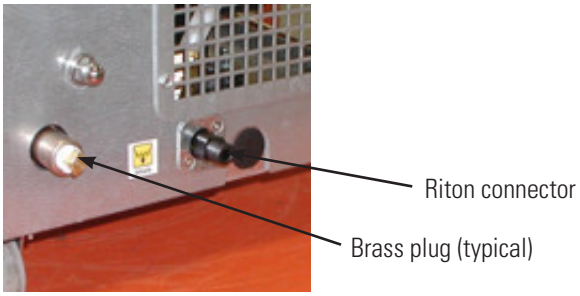

Figure 8-1 Drains

Water-Cooled

Draining ThermoFlex1400 - 2500 water-cooled chillers is accomplished by removing the right side panel. Use a Phillips head screwdriver to remove the five screws indicated in the illustration below. Slide the panel back approximately one inch, then lift slightly from the rear to disengage the panel's two tabs from their slots.

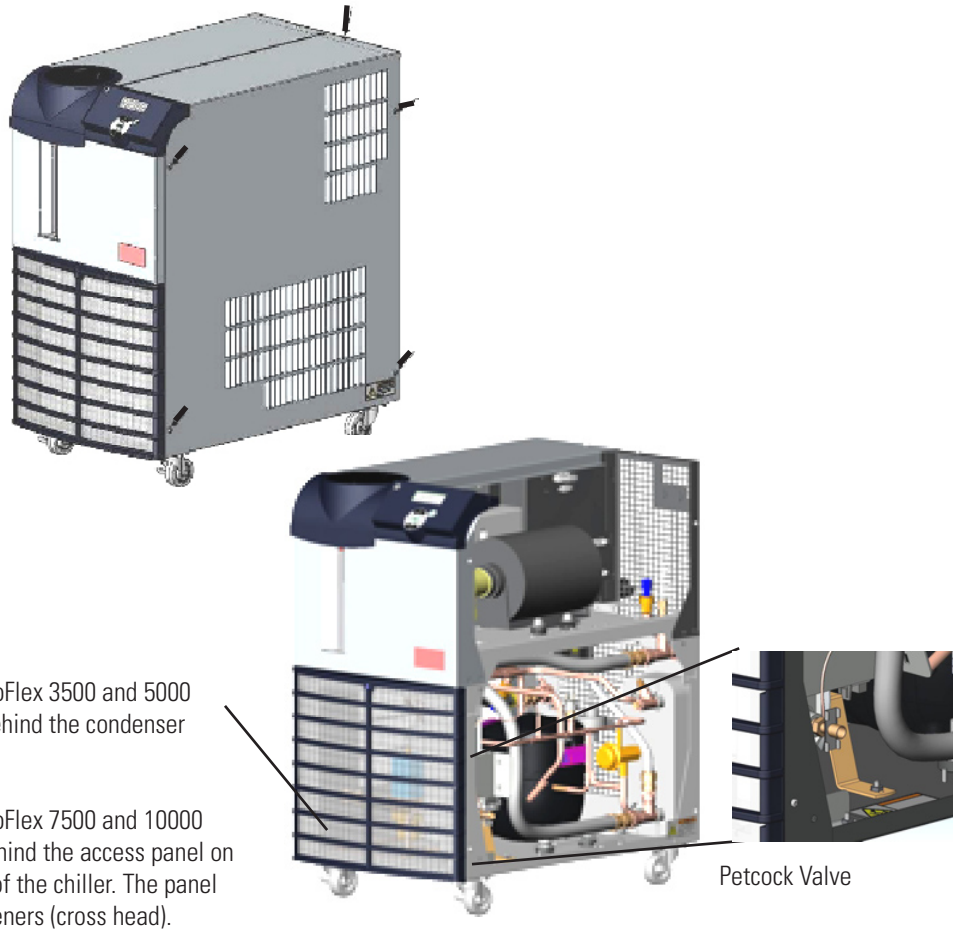

Figure 8-2 Water-Cooled

Install a $^{7}/_{16}$" ID tube on the drain petcock valve located on the lower end of the exchanger. Open the valve to allow fluid to drain into an external device. When draining is complete close the valve and replace the panel.

A wet-vac is needed on the facility water inlet connection to thoroughly drain any remaining fluid from the lines.

CALIBRATION

The ThermoFlex has been designed to minimize the need for calibration. However, if calibration is desired or recommended by our Sales, Service and Customer Support, please use the following procedure.

CALIBRATION calibrates the chiller's temperature (**t1**), pressure (**p2**) and optional fluid flow (**flow1**) sensors. Each calibration requires a running chiller and a calibrated reference device. Typically, a 2-point calibration is used. Select which point to calibrate, **Low** or **High**. Press enter and enter the value as read by the reference device. Press enter. Select **Cal.** to the right of the value just entered by pressing the down key. Press enter and note that the **Current** value now equals the value just entered.

1. Highlight **CALIBRATION**.

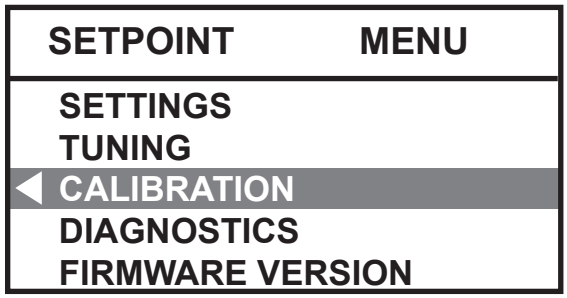

2. Press enter and highlight **CALIBRATE**.

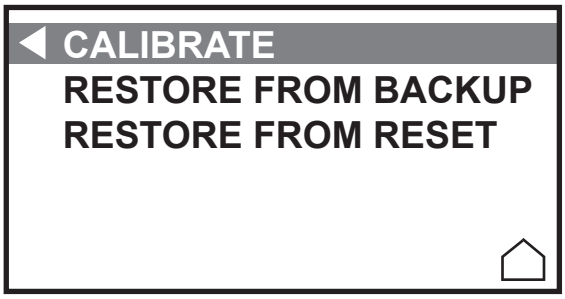

3. Press enter to display:

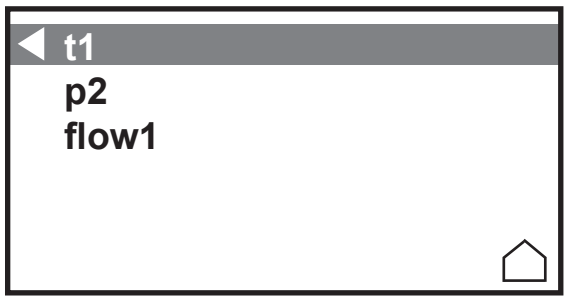

4. Highlight the desired sensor then press enter to display:

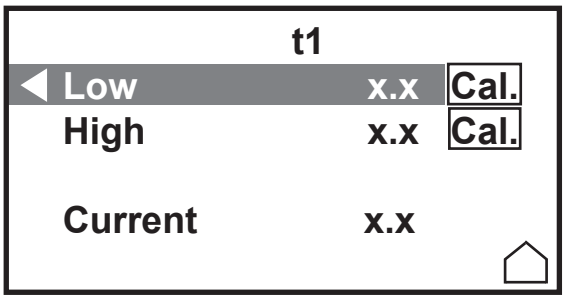

For **t1**, run the chiller to a suitable high-end calibration point. Place a calibrated reference thermometer in the reservoir. Ensure the fluid temperature is stabilized before performing the calibration. If it is more convenient, perform the low-end calibration before doing the high-end. Do not pick calibration points that are outside the safe operating limits of the fluid in your application. For example, with water, 40°C and 5°C are typical high and low calibration points (90°C and 5°C for high-temperature chillers).

For **p2**, connect a calibrated reference pressure gauge to the outlet line. Use an external flow control valve to adjust the pressure to suitable calibration points. Ensure the pressure is stabilized before calibrating.

For **flow1**, connect a calibrated reference flow meter to the outlet line. Use an external flow control valve to adjust the flow to suitable calibration points. Ensure the flow is stabilized before calibrating.

To restore a selected sensor to the factory values you have two options, **BACKUP** and **RESET**. **BACKUP** restores both the controller board and sensor calibration, **RESET** only restores the board calibration.

Wetted Materials

P1, P2, MD1 and MD2 Pumps

303 Stainless Steel

Ultem®

Carbon Graphite

Ceramic

Fluorocarbon (Viton®)

Brass

P3 Pumps

316 Series Stainless Steel

Carbon

Silicon Carbide

Fluorocarbon (Viton®)

P4 Pumps

304 Stainless Steel

Carbon Ceramic

Fluorocarbon (Viton®)

P5 Pumps

304, 316 Series Stainless Steel

Carbon Ceramic

Fluorocarbon (Viton®)

T0 Pumps

Stainless Steel AISI 304

Stainless Steel 316, 18-8

Bronze ASTM B62 and B12

Buna N

Buna/Ceramic and Carbon

Fluorocarbon (Viton®)

Silicon Brass

Filter bag

Polypropylene

Mono-filament nylon

Cap and Funnel

Acetal Copolymer

T1 Pumps

Stainless Steel AISI 304

Stainless Steel 316, 18-8

Bronze ASTM B62 and B16

Buna N

Silicon Carbide and Brass

Fluorocarbon (Viton®)

T5 Pumps

Silicon Brass

Stainless Steel AISI 304

Stainless Steel 316, 18-8

Bismuth Bronze

Buna N

Carbon/Ceramic

Viton

Plumbing

300 Series Stainless Steel

Bronze

Fluorocarbon (Viton®)

Nickel

Polypropylene

EPDM

Brass

Copper

Teflon®

PPS (flow transducer)

Nitrile (Buna-n®)

Riton® (optional drain fitting)

Tank

Polyethylene (standard temp)

Polyvinyldiene Diflouride (hi temp)

Brass

EPDM

Pyrex®

Decommissioning/ Disposal

Decommissioning prepares equipment for safe and secure transportation.

⚠ WARNING

Laboratory Grade Ethylene glycol (EG) is poisonous and flammable. Before disposing refer to the manufacturer's most current MSDS for handling precautions. ▲

⚠ CAUTION

Decommissioning must be performed only by qualified dealer using certified equipment. All prevailing regulations must be followed. ▲

Consider decommissioning the chiller when:

- It fails to maintain desired specifications
- It no longer meets safety standards
- It is beyond repair for its age and worth

Refrigerant and compressor oil must be recovered from equipment before disposal.

Note Keep in mind any impact your application may have had on the chiller. ▲

Direct questions about chiller decommissioning or disposal to our Sales, Service and Customer Support.

⚠ CAUTION

Handle and dispose in accordance with the manufacturers specification and/or the MSDS for the material used. ▲

Shipment/Storage

⚠ CAUTION

Follow the manufacturer's MSDS instructions if decontamination is required. ▲

⚠ CAUTION

Transporting and/or storing the chiller in near or below freezing temperatures requires draining, see Draining in this Section. Store the chiller in the temperature range of -25°C to 60°C (with packaging), and <80% relative humidity. ▲

⚠ CAUTION

If the chiller is stored for more than 90 days it must be flushed with clean fluid before operating. ▲

Appendix A Country Specific 230 VAC, 50 Hz, 1Ø Requirements

Refer to the nameplate label located on the rear of the chiller for specific electrical requirements.

1. Chillers shipped to the following locations require a **16 Amp service**:

Afghanistan, Albania, Algeria, Andorra, Angola, Argentina, Armenia, Austria, Azerbaijan, Belarus, Belgium, Benin, Bolivia, Bosnia and Herzegovina, Brazil, Bulgaria, Burkina Faso, Burundi, Cambodia, Cameroon, Cape Verde, Central African Republic, Chad, Chile, Comoros, Congo, Croatia, Czech Republic, Denmark, Djibouti, DR Congo, Ecuador, Egypt, Eritrea, Estonia, Ethiopia, Finland, France, French Guiana, Gabon, Georgia, Germany, Greece, Guinea, Hungary, Iceland, Indonesia, Iran, Iraq, Israel, Italy, Ivory Coast, Jordan, Kazakhstan, Kyrgyzstan, Latvia, Lebanon, Liberia, Libya, Liechtenstein, Lithuania, Luxembourg, Madagascar, Mali, Mauritania, Moldova, Monaco, Mongolia, Morocco, Mozambique, Namibia, Nepal, Netherlands, Niger, North Korea, Norway, Paraguay, Peru, Poland, Portugal, Romania, Russia, Rwanda, Saint Vincent and the Grenadines, San Marino, Sao Tome and Principe, Saudi Arabia, Senegal, Serbia, Slovakia, Slovenia, Somalia, South Africa, South Korea, Spain, Sweden, Switzerland, Syria, Tajikistan, Thailand, Togo, Tunisia, Turkey, Turkmenistan, Ukraine, Uruguay, Uzbekistan, Vanuatu, Vatican City, Vietnam.

2. Chillers shipped to the following locations require a **15 Amp service**:

Australia, China, Fiji Islands, Nauru, New Zealand, Papua New Guinea, Solomon Island, Tonga, Tuvalu.

3. Chillers shipped to the following locations require a **13 Amp service**:

Abu Dhabi, Bahrain, Bangladesh, Botswana, Brunei, Cyprus, Dominica, Gambia, Ghana, Gibraltar, Grenada, Hong Kong, India, Ireland, Kenya, Kiribati, Kuwait, Lesotho, Malawi, Malaysia, Maldives, Malta, Mauritius, Myanmar, Nigeria, Oman, Pakistan, Qatar, Saint Lucia, Seychelles, Sierra Leone, Singapore, Sri Lanka, Sudan, Swaziland, Tanzania, Uganda, United Arab Emirates, United Kingdom Yemen, Zambia, Zimbabwe.

Appendix B Voltage Configuration Instructions

ThermoFlex 900 and 1400 chillers equipped with the 115V 60Hz, 100v 50/60Hz Variable Voltage option and ThermoFlex 900 to 5000 chillers equipped with 200-230V 50/60Hz Global Voltage option have a voltage configuration panel located on the rear of the chiller behind an access panel, see Figure B-1.

- Use a 1/4" socket to remove the four screws securing the access panel to the chiller.

- The configuration panel has two 3-position toggle switches, one for voltage and one for frequency. All chillers are shipped with the toggle switch in the center **SHIP** position. Place each switch to the settings that match the voltage/frequency supplied to the chiller.

  Note For ThermoFlex900-2500 global voltage chillers, the compressor and fan will not operate when the switch is in the **SHIP** position. ▲

- Reinstall the access panel.

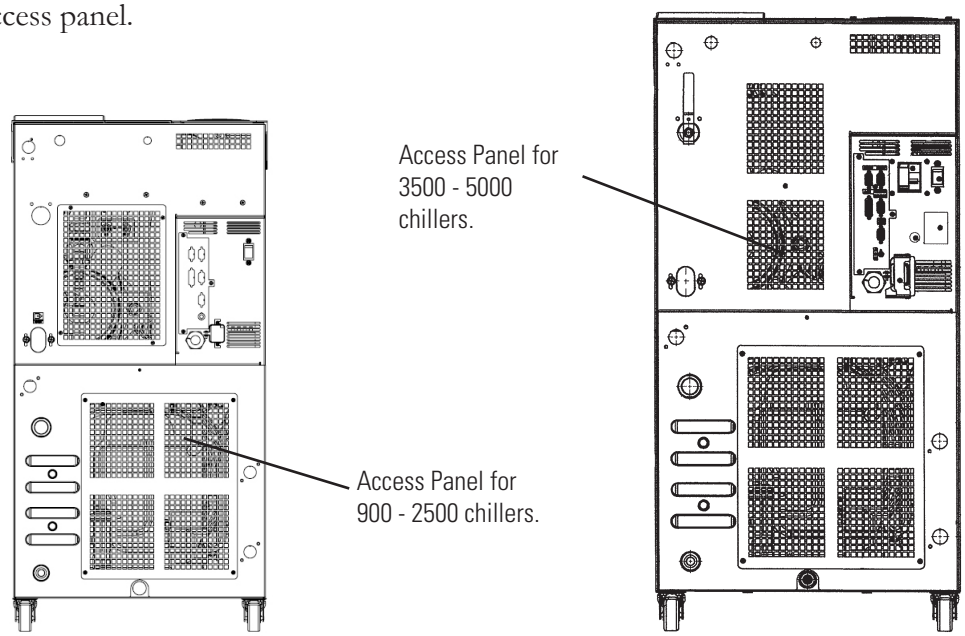

Figure B-1 Variable/Global Voltage Chillers

Appendix C NC Serial Communications Protocol

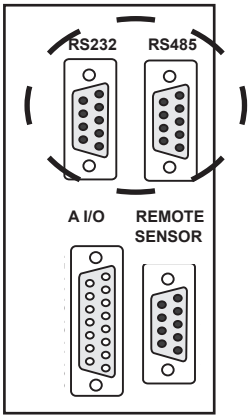

Figure C-1 Connectors

Note Appendix C assumes you have a basic understanding of communications protocols. ▲

Connect your PC to the applicable connector on the rear of the chiller. Use the controller, see Section 4, to enable serial communications.

Note Keypad operation is still available with serial communications enabled. ▲

WARNING **Never apply line voltage to any of the connections.** ▲

All data is sent and received in binary form, do not use ASCII. In the following pages the binary data is represented in hexadecimal (hex) format.

The NC Serial Communications Protocol is based on a master-slave model. The master is a host computer, while the slave is the chiller's controller. Only the master can initiate a communications transaction (half-duplex). The slave ends the transaction by responding to the master's query. The protocol uses RS-232/RS-485 serial interface with the default parameters: 9600 baud, 8 data bits, 1 stop bit, and no parity. RS-485 offers a slave address selection, default parameter: 1.

The chiller can be controlled through your computer's serial port by using the chiller's standard female 9-pin connection.

RS-232 COMM

Pin #	Function
1	No connection
2	TX
3	RX
4	No connection
5	GND = Signal ground
6 - 9	No connection

TX = Transmitted data from controller
RX = Received data to controller.

RS-485 COMM

Pin #	Function
1-7	No connection
8	T+
9	T-

Hardware **Mating Connector**
AMP Part# 745492-2 or equivalent

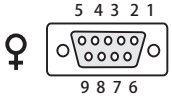

Communication cables are available from Thermo Fisher. Contact us for additional information.

All commands must be entered in the exact format shown in the tables on the following pages. The tables show all commands available, their format and responses. Controller responses are either the requested data or an error message. The controller response *must* be received before the host sends the next command.

The host sends a command embedded in a single communications packet, then waits for the controller's response. If the command is not understood or the checksums do not agree, the controller responds with an error command. Otherwise, the controller responds with the requested data. If the controller fails to respond within 1 second, the host should resend the command.

Note All byte values are shown in hex, hex represents the binary values that must be sent to the chiller. **Do not use ASCII. ▲**

The framing of the communications packet in both directions is:

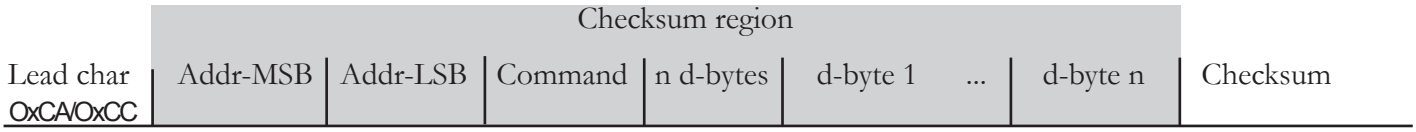

Lead char	**0xCA (RS-232) 0xCC (RS-485)**
	Device address is 1 (RS-232)
Addr-msb	Most significant byte of slave address (RS-232: 0)
Addr-lsb	Least significant byte of slave address (RS-232: 1)
Command	Command byte (see Table of Commands)
n d-bytes	Number of data bytes to follow
d-byte 1	1st data byte (the qualifier byte is considered a data byte)
...	...
d-byte n	nth data byte.
Checksum	Bitwise inversion of the 1 byte sum of bytes beginning with the most significant address byte and ending with the byte preceding the checksum. (To perform a bitwise inversion, "exclusive OR" the one byte sum with FF hex.)

When a command has no value associated with it, (e.g., REQ ACK), "n d-bytes" will be set to 0. Values such as temperature and flow are sent as either 2 or 4 byte signed integers, depending on how they are stored in the controller RAM.

When the controller sends a value, a qualifier byte is sent first, followed by a 2 or 4 byte integer (the least significant byte is sent last). The qualifier indicates the precision and units of the value. The host does not send the qualifier byte; it must send the value using the correct precision, units and number of bytes. The host first inquires about a value it wants to change, then uses the number of data bytes and the qualifier byte it receives to generate the proper integer to send.

Analog Values

*Qualifier Byte	
b.7 b.6 b.5 b.4	Precision of measurement
b.3 b.2 b.1 b.0	Unit of measure index

Unit of Measure	
Index	Unit
0	NONE
1	Temperature in °C
2	Temperature in °F
3	Flow liters per minute
4	Flow in gallons per minute
5	Time in seconds
6	Pressure in PSI
7	Pressure in bars
8	Resistivity in MΩ-cm
9	%
10	Volts
11	Pressure in K Pascals
12	Conductivity in µs/cm

E.g., the integer 986 proceeded by a qualifier byte of 0x12 is 98.6°F.

Example to set setpoint to 25°C:

If the temperature units are unknown, before changing the setpoint send a command to request setpoint. The response will include both the precision and units. Precision is fixed at 0.1 and units can be either °C or °F. If the units are already known skip to step 3.

1. Master sends:	CA 00 01 70 00 8E	(REQ SETPOINT1)
2. Slave responds:	CA 00 01 70 03 11 00 C8 B2	(0.1°C x 200)
Response indicates:		
uses a 2 byte integer		(nn=03)
precision and units are 0.1°C		(d1=11)
3. Master sends:	CA 00 01 F0 02 00 FA 12	(Set Setpoint 1 to 25.0°C)
4. Slave responds:	CA 00 01 F0 03 11 00 FA 00	(0.1°C x 250)

See Additional Command Examples in this Appendix.

Set Commands – When a Set Command is received and the value is within the allowable limits, the new value will take affect immediately and the new value will be returned as part of the response to the command. If the value is outside of the allowable limits, the value will be rejected and the old value will be returned as part of the response to the command.

Error Response F0 - The "Bad Data" and "Bad Checksum" error responses will not be used. Reject out of range values and return old settings. Do not reply to message frames with bad checksums. This behavior is compatible with existing implementations of the protocol.

Table of Commands

Command	M: Master Sends S: Slave Responds	Notes
REQUEST STATUS		
REQ ACK	M: lc a1 a2 **00** 00 cs S: lc a1 a2 **00** 02 v1 v2 cs	protocol version v1=0; v2=1
REQ CONTROLLER SW VER	M: lc a1 a2 **02** 01 d1 cs S: lc a1 a2 **02** nn d1 … dn cs	d1 = 0 Controller SW version in ASCII d1 = 1 Controller SW checksum
REQ STATUS	M: lc a1 a2 **09** 00 cs S: lc a1 a2 **09** nn d1 … dn cs	see Request Status Table in this Appendix
ERROR	M: S: lc a1 a2 **0F** 02 en ed cs	Response Only! ed = Error Data en = Error Number 1: Bad Command See Error in this Appendix
REQUEST MEASUREMENTS		
REQ SETPT1	M: lc a1 a2 **70** 00 cs S: lc a1 a2 **70** 03 d1 d2 d3 cs	Process Fluid Setpoint
REQ FLOW1	M: lc a1 a2 **10** 00 cs S: lc a1 a2 **10** 03 d1 d2 d3 cs	Process Fluid Flow
REQ TEMP1	M: lc a1 a2 **20** 00 cs S: lc a1 a2 **20** 03 d1 d2 d3 cs	Process Fluid Supply Temperature (RTD1)
REQ TEMP2	M: lc a1 a2 **21** 00 cs S: lc a1 a2 **21** 03 d1 d2 d3 cs	Process Fluid Return Temperature (RTD2)
REQ TEMP4	M: lc a1 a2 **23** 00 cs S: lc a1 a2 **23** 03 d1 d2 d3 cs	Entering Air/Facility Water (RTD4)
REQ TEMP7	M: lc a1 a2 **26** 00 cs S: lc a1 a2 **26** 03 d1 d2 d3 cs	ThermoFlex 2500 Air-cooled Fan Speed
REQ ANALOG1	M: lc a1 a2 **28** 00 cs S: lc a1 a2 **28** 03 d1 d2 d3 cs	Process Fluid Supply Pressure (P2)
REQ ANALOG2	M: lc a1 a2 **29** 00 cs S: lc a1 a2 **29** 03 d1 d2 d3 cs	Refrigeration Suction Pressure (P5)
REQ ANALOG3	M: lc a1 a2 **2A** 00 cs S: lc a1 a2 **2A** 03 d1 d2 d3 cs	Process Fluid Return Pressure (P1)
REQ ANALOG4	M: lc a1 a2 **2B** 00 cs S: lc a1 a2 **2B** 03 d1 d2 d3 cs	Condensing Pressure (P6)

REQ ANALOG5	M: lc a1 a2 **1C** 00 cs S: lc a1 a2 **1C** 03 d1 d2 d3 cs	Facility Inlet Pressure (P7)
REQ ANALOG6	M: lc a1 a2 **1D** 00 cs S: lc a1 a2 **1D** 03 d1 d2 d3 cs	Facility Outlet Pressure (P8)
REQ ANALOG7	M: lc a1 a2 **1E** 00 cs S: lc a1 a2 **1E** 03 d1 d2 d3 cs	Analog Level (LEV4)
REQ ANALOG9	M: lc a1 a2 **2F** 00 cs S: lc a1 a2 **2F** 03 d1 d2 d3 cs	+5V Sense
REQ REMOTE RTD	M: lc a1 a2 **1B** 00 cs S: lc a1 a2 **1B** 03 d1 d2 d3 cs	Remote Temperature from Analog Board
REQ RES1	M: lc a1 a2 **2C** 00 cs S: lc a1 a2 **2C** 03 d1 d2 d3 cs	Process Fluid Resistivity

REQUEST LOW ALARM VALUES

REQ LO FLOW1	M: lc a1 a2 **30** 00 cs S: lc a1 a2 **30** 03 d1 d2 d3 cs	Process Warning
REQ LO FLOW3	M: lc a1 a2 **32** 00 cs S: lc a1 a2 **32** 03 d1 d2 d3 cs	Process Fault
REQ LO ANALOG1	M: lc a1 a2 **48** 00 cs S: lc a1 a2 **48** 03 d1 d2 d3 cs	Pressure Process Supply Warning
REQ LO ANALOG2	M: lc a1 a2 **49** 00 cs S: lc a1 a2 **49** 03 d1 d2 d3 cs	Pressure Process Supply Fault
REQ LO ANALOG7	M: lc a1 a2 **3E** 00 cs S: lc a1 a2 **3E** 03 d1 d2 d3 cs	Level Warning
REQ LO ANALOG8	M: lc a1 a2 **3F** 00 cs S: lc a1 a2 **3F** 03 d1 d2 d3 cs	Level Fault
REQ LO TEMP1	M: lc a1 a2 **40** 00 cs S: lc a1 a2 **40** 03 d1 d2 d3 cs	Process Warning
REQ LO TEMP2	M: lc a1 a2 **41** 00 cs S: lc a1 a2 **41** 03 d1 d2 d3 cs	Process Fault
REQ AUTO REFILL ON	M: lc a1 a2 **45** 00 cs S: lc a1 a2 **45** 03 d1 d2 d3 cs	Auto refill On Setting
REQ LO RES1	M: lc a1 a2 **4C** 00 cs S: lc a1 a2 **4C** 03 d1 d2 d3 cs	Process Warning

REQUEST HIGH ALARM VALUES

REQ HI FLOW1	M: lc a1 a2 **50** 00 cs S: lc a1 a2 **50** 03 d1 d2 d3 cs	Process Warning
REQ HI FLOW3	M: lc a1 a2 **52** 00 cs S: lc a1 a2 **52** 03 d1 d2 d3 cs	Process Fault
REQ HI TEMP1	M: lc a1 a2 **60** 00 cs S: lc a1 a2 **60** 03 d1 d2 d3 cs	Process Warning
REQ HI TEMP2	M: lc a1 a2 **61** 00 cs S: lc a1 a2 **61** 03 d1 d2 d3 cs	Process Fault
REQ HI ANALOG1	M: lc a1 a2 **68** 00 cs S: lc a1 a2 **68** 03 d1 d2 d3 cs	Pressure Process Supply Warning
REQ HI ANALOG2	M: lc a1 a2 **69** 00 cs S: lc a1 a2 **69** 03 d1 d2 d3 cs	Pressure Process Supply Fault
REQ HI RES1	M: lc a1 a2 **6C** 00 cs S: lc a1 a2 **6C** 03 d1 d2 d3 cs	Process Warning

REQUEST PID SETTINGS

REQ COOL P	M: lc a1 a2 **74** 00 cs S: lc a1 a2 **74** 03 d1 d2 d3 cs
REQ COOL I	M: lc a1 a2 **75** 00 cs S: lc a1 a2 **75** 03 d1 d2 d3 cs
REQ COOL D	M: lc a1 a2 **76** 00 cs S: lc a1 a2 **76** 03 d1 d2 d3 cs
REQ HEAT P	M: lc a1 a2 **71** 00 cs S: lc a1 a2 **71** 03 d1 d2 d3 cs
REQ HEAT I	M: lc a1 a2 **72** 00 cs S: lc a1 a2 **72** 03 d1 d2 d3 cs
REQ HEAT D	M: lc a1 a2 **73** 00 cs S: lc a1 a2 **73** 03 d1 d2 d3 cs

SET STATUS SETTINGS

SET KEYSTROKE	M: lc a1 a2 **80** 01 d1 cs S: lc a1 a2 **80** 01 d1 cs	See Set Keystroke in this Appendix
SET ON/OFF ARRAY	M: lc a1 a2 **81** nn d1 … dn cs S: lc a1 a2 **81** nn d1 … dn cs	See Set On/Off Array in this Appendix di: 0 = OFF, 1 = ON, 2 = no change

SET MEASUREMENT

SET SETPT1	M: lc a1 a2 **F0** 02 d1 d2 cs S: lc a1 a2 **F0** 03 d1 d2 d3 cs	Process Fluid Setpoint

SET LOW ALARM VALUES

SET LO FLOW1	M: lc a1 a2 **B0** 02 d1 d2 cs S: lc a1 a2 **B0** 03 d1 d2 d3 cs	Process Warning
SET LO FLOW3	M: lc a1 a2 **B2** 02 d1 d2 cs S: lc a1 a2 **B2** 03 d1 d2 d3 cs	Process Fault
SET LO TEMP1	M: lc a1 a2 **C0** 02 d1 d2 cs S: lc a1 a2 **C0** 03 d1 d2 d3 cs	Process Warning
SET LO TEMP2	M: lc a1 a2 **C1** 02 d1 d2 cs S: lc a1 a2 **C1** 03 d1 d2 d3 cs	Process Fault
SET LO ANALOG1	M: lc a1 a2 **C8** 02 d1 d2 cs S: lc a1 a2 **C8** 03 d1 d2 d3 cs	Pressure Process Supply Warning
SET LO ANALOG2	M: lc a1 a2 **C9** 02 d1 d2 cs S: lc a1 a2 **C9** 03 d1 d2 d3 cs	Pressure Process Supply Fault
SET LO ANALOG7	M: lc a1 a2 **BE** 02 d1 d2 cs S: lc a1 a2 **BE** 03 d1 d2 d3 cs	Level Warning
SET LO ANALOG8	M: lc a1 a2 **BF** 02 d1 d2 cs S: lc a1 a2 **BF** 03 d1 d2 d3 cs	Level Fault
SET AUTO REFILL ON	M: lc a1 a2 **C5** 02 d1 d2 cs S: lc a1 a2 **C5** 03 d1 d2 d3 cs	When level % drops below this, turn on auto refill
SET LO RES1	M: lc a1 a2 **CC** 02 d1 d2 cs S: lc a1 a2 **CC** 03 d1 d2 d3 cs	Process Warning
SET LO RES1	M: lc a1 a2 **CD** 02 d1 d2 cs S: lc a1 a2 **CD** 03 d1 d2 d3 cs	Process Fault

SET HIGH ALARM VALUES

SET HI FLOW1	M: lc a1 a2 **D0** 02 d1 d2 cs S: lc a1 a2 **D0** 03 d1 d2 d3 cs	Process Warning
SET HI FLOW3	M: lc a1 a2 **D2** 02 d1 d2 cs S: lc a1 a2 **D2** 03 d1 d2 d3 cs	Process Fault
SET HI TEMP1	M: lc a1 a2 **E0** 02 d1 d2 cs S: lc a1 a2 **E0** 03 d1 d2 d3 cs	Process Warning
SET HI TEMP2	M: lc a1 a2 **E1** 02 d1 d2 cs S: lc a1 a2 **E1** 03 d1 d2 d3 cs	Process Fault
SET HI ANALOG1	M: lc a1 a2 **E8** 02 d1 d2 cs S: lc a1 a2 **E8** 03 d1 d2 d3 cs	Pressure Process Supply Warning
SET HI ANALOG2	M: lc a1 a2 **E9** 02 d1 d2 cs S: lc a1 a2 **E9** 03 d1 d2 d3 cs	Pressure Process Supply Fault
SET HI ANALOG7	M: lc a1 a2 **DE** 02 d1 d2 cs S: lc a1 a2 **DE** 03 d1 d2 d3 cs	Level Warning
SET HI ANALOG8	M: lc a1 a2 **DF** 02 d1 d2 cs S: lc a1 a2 **DF** 03 d1 d2 d3 cs	Level Fault
SET AUTO REFILL OFF	M: lc a1 a2 **E5** 02 d1 d2 cs S: lc a1 a2 **E5** 03 d1 d2 d3 cs	When level % drops below this, turn off auto refill
SET HI RES1	M: lc a1 a2 **EC** 02 d1 d2 cs S: lc a1 a2 **EC** 03 d1 d2 d3 cs	Process Warning
SET HI RES2	M: lc a1 a2 **ED** 02 d1 d2 cs S: lc a1 a2 **ED** 03 d1 d2 d3 cs	Process Fault

SET PID SETTINGS

SET COOL P	M: lc a1 a2 **F4** 02 d1 d2 cs S: lc a1 a2 **F4** 03 d1 d2 d3 cs	Cool P Term
SET COOL I	M: lc a1 a2 **F5** 02 d1 d2 cs S: lc a1 a2 **F5** 03 d1 d2 d3 cs	Cool I Term
SET COOL D	M: lc a1 a2 **F6** 02 d1 d2 cs S: lc a1 a2 **F6** 03 d1 d2 d3 cs	Cool D Term
SET HEAT P	M: lc a1 a2 **F1** 02 d1 d2 cs S: lc a1 a2 **F1** 03 d1 d2 d3 cs	Heat P Term
SET HEAT I	M: lc a1 a2 **F2** 02 d1 d2 cs S: lc a1 a2 **F2** 03 d1 d2 d3 cs	Heat I Term
SET HEAT D	M: lc a1 a2 **F3** 02 d1 d2 cs S: lc a1 a2 **F3** 03 d1 d2 d3 cs	Heat D Term

Request Status Table

nn	4				
	b0	Chiller Running		b0	HTC (High Temperature Cutout)
	b1	Chiller Faulted		b1	LLC (Low Level Cutout)
	b2	Process Supply RTD open or shorted		b2	MOL (Motor Overload)
d1	b3	Process Return RTD open or shorted	d3	b3	Phase Monitor
	b4	Suction RTD open or shorted		b4	HPC (High Pressure Cutout)
	b5	Entering Air or Facility Water RTD open or shorted		b5	LPC (Low Pressure Cutout)
	b6	High Temp Error		b6	EMO
	b7	Low Temp Error		b7	External EMO
	b0	High Pressure Error		b0	RA T_MAX (High Temperature)
	b1	Low Pressure Error		b1	Not used
	b2	High Flow Error (user set able)		b2	Auto Refill Valve Open
d2	b3	Low Flow Error (user set able)	d4	b3	Anti Drainback Valve Open
	b4	High Level Error		b4	Clogged Fluid Filter Fault
	b5	Low Level Error		b5	Temp Fault Startup Bypass
	b6	Drip Pan fault		b6	System Low Flow
	b7	Auto Refill fault		b7	Not used

Error

The slave detected an error in the message it received from the master, so it returns this command instead of echoing the command sent by the master. The slave returns the command it received from the master in the ed byte, and an error code in the en byte.

en	Error
1	Bad command – not recognized by slave
2	Reject value and return old setting
3	Do not respond at all

Some errors may not result in any response. The slave ignores incoming bytes until it sees the valid lead character and its slave address. Then it must receive the correct number of bytes (determined by the length byte) before it can respond. If an incomplete frame is received, the slave will time out and clear its input buffer without responding.

Set On/Off Array

This command is used to set the state of the chiller on or off. Sending a 0 in the array turns off the chiller while sending a 1 turns it on . Sending a 2 does not change the state of the feature. The array is returned showing the state of each feature after the command has been carried out. Sending a 2 effectively turns this command into a request status command.

nn	1
d1	Chiller On/Off

Set Keystroke

This command is used to affect a keystroke remotely as if someone pressed the key on the controller.

Value	
0	Null
1	Enter
2	Up/Yes
3	Down/No
4	Esc
5	On/Off
6	Left
7	Right

Set Special Command

Used for product specific commands, in the ThermoFlex this command configures the analog options (DAC out, Analog in and turns on and off DAC output)

CA 00 01 8D nn d1…dn cs

Set Special Command

Byte		Notes
d1	Command Byte	Indicates what command
d2	Description Byte	See description below
d3	Entered Value if necessary	

Command Byte

Command	Description
00	Set Analog Option
01	Set Resistivity Control (for basic derivatives)
02	Unused

Description Byte

Byte	Notes	
b.7 - b.6	Unused	
b.5 and b.4	Remote DAC output enable	00 = Off, 01 = On, 1x = No Change
b.3 - b.2	Configure DAC Output	00h = Volt, 01h = millivolt, 02h = milliamp, 03h = No Change
b.1 - b.2	Configure Analog Input	00h = Volt, 01h = millivolt, 02h = milliamp, 03h = No Change

The following command string example enables the DAC output, configures the DAC for millivolts and configures the analog input for voltage:

CA 00 01 8D 02 00 14 cs

Appendix D Analog I/O and Remote Sensor

Analog I/O Connector Pinout ♀

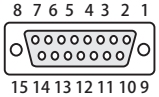

Install your analog input/output device to the 15-pin female connector on the rear of the chiller. Analog I/O is activated using the controller, see Section 4.

PIN	NAME	NOTES	DEFINITION
1	DIGITAL GROUND		Common round connection for pins 12, 13 and 14
2	RESISTIVITY OUT	Optional	Analog voltage output 0v = 0 MΩ - cm 10v = 20 MΩ - cm
3	LOW LEVEL (Only if option chosen)	Note 1	Dry Relay Contact: Reference to pin 11. Closes if either level switch is in the "low" position for more than 1 second.
4	CONFIGURABLE RELAY 2	Note 1	Dry Relay Contact: Reference to pin 11. Closes when any configured fault or warning occurs.
5	PUMP ON	Note 1	Dry Relay Contact: Reference to pin 11. Closes when pump is turned on. Opens when pump is turned off.
6	ANALOG GROUND		Common for analog signals (pins 2, 7 and 15)
7	RESERVOIR TEMP OUT **OR** EXTERNAL SENSOR TEMPERATURE IF EXTERNAL SENSOR ENABLED	Note 2	Analog Voltage Output 0-10VDC, 10mV/°C, or 4-20mA: Reference to pin 6. This voltage output is proportional to the reservoir fluid temperature: Default scale= 0–10V (where: 0V = Low Temp Span, 10V = Hi Temp Span) Optional Range = 10mV/ ^{0}C. (Ex: 200mV = 20°C) (Max Load @ 10V = 5mA) or 4-20mA, 4mA = low temp span, 20 mA = high temp span (maximum output current = 5mA @10VDC.
8	LOW FLOW (Only if option chosen)	Note 1	Dry Relay Contact: Reference to pin 11. Closes when a low flow occurs while the pump is on. Note: To allow the pump to get up to speed at startup, the pump runs for 3 - 5 seconds before the low flow sensor is read.
9	CONFIGURABLE RELAY 1 (Normally Open)	Note 1	Dry Relay Contact: Reference to pin 11. Closes when any of the configured faults occur.
10	CONFIGURABLE RELAY 1 (Normally Closed)	Note 1	Dry Relay Contact: Reference to pin 11. Complement of pin 9 (open when pin 9 is closed).
11	RELAY COMMON		Common for all relay contacts (pins 3, 4, 5, 8, 9, 10).
12	REMOTE START ENABLE	Note 3	Connect to pin 1 to allow chiller to be remotely turned on/off through pin 14 REMOTE START.

Note 1: All relay contacts (except for Pin 10) are normally OPEN when power is off. Pin 10 contacts are normally CLOSED when power is off. Relay contacts are rated: 24V AC/DC, 2A, <= 0.08 Ohm maximum each or 5A total for all relays combined, 1mA minimum, switching capacity: 48VA/48W (Resistive load only).

Note 2: Default = 0-10VDC. These ranges are set by the user.

Note 3: Connect to digital ground (pin 1) using a low resistance connection (gold contact relay).

PIN	NAME	NOTES	DEFINITION
13	REMOTE SETPOINT ENABLE	Note 3	Connect to pin 1 to allow the setpoint to be changed remotely through pin 15 REMOTE SETPOINT.
14	REMOTE START	Note 3	Connect to pin 1 to turn chiller on. Disconnect to turn chiller off. Note: Pins 1 and 12 must be connected to allow operation from this pin.
15	REMOTE SETPOINT	Note 2, 4	Analog Voltage Input 0-10VDC, 10mV/°C, or 4-20mA: Reference to pin 6. Apply a DC voltage to this pin to adjust the setpoint: Default Range = 0 – 10V (where: 0V = Low Temp Span, 10V = Hi Temp Span) (Input Impedance > 600K) Optional Range = 10mV/ ^{0}C. (Ex: 200mV = 20°C) (Max Input Voltage = 10VDC, or 4-20mA, 4mA = low temp span, 20 mA = high temp span.

Note 1: All relay contacts (except for Pin 10) are normally OPEN when power is off. Pin 10 contacts are normally CLOSED when power is off. Relay contacts are rated: 24V AC/DC, 2A, <= 0.08 Ohm maximum each or 5A total for all relays combined, 1mA minimum, switching capacity: 48VA/48W (Resistive load only).

Note 2: Default = 0-10VDC. These ranges are set by the user.

Note 3: Connect to digital ground (pin 1) using a low resistance connection (gold contact relay).

Note 4: Remote setpoint must be enabled, pin 13

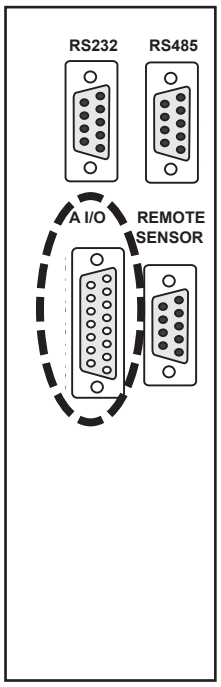

Figure D-1 Analog I/0 Connector

WARNING **Never apply line voltage to any of the connections. ▲**

When making your connection to the ThermoFlex Analog I/0 connector, in order to comply with the EMC directive:

- Use a shielded I/0 cable
- Connect the remote end of the cable shield to earth ground.
- Connect cable shield to ThermoFlex end connector.

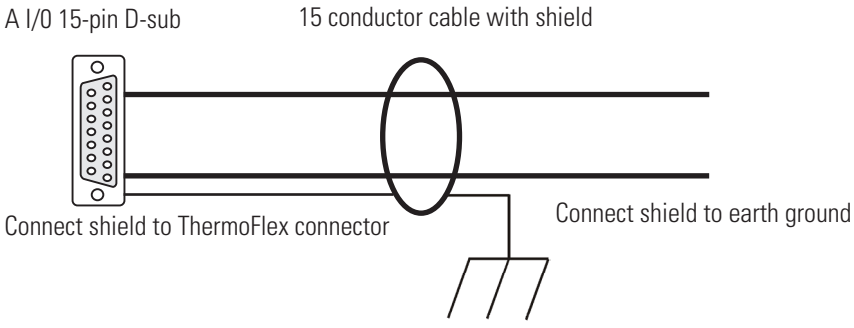

Analog Comm and Configurable Relays

Use the up/down arrows to scroll through the entire menu (only six lines are displayed at a time). When any desired feature is highlighted press enter to select it. Enabled features are indicated by ■ .

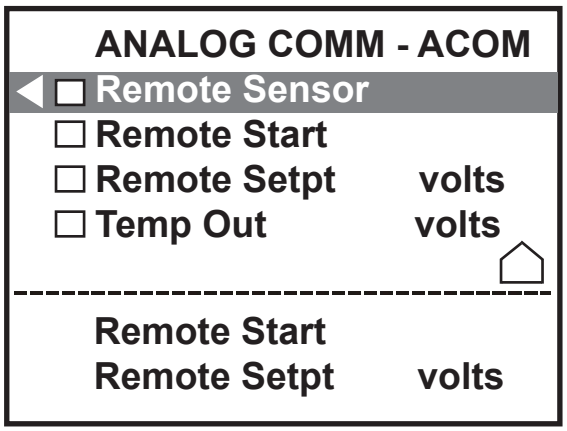

To change the **Remote Setpoint** or **Temp Out** input type use the up and down arrows until the input is highlighted. (The left and right arrows have no affect in moving the highlight.)

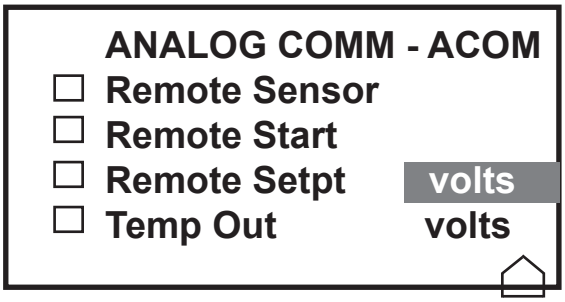

Note Enabling analog I/O remote start/stop disables the chiller's local controller start/stop capability. Enabling analog I/O remote also overrides serial communications start/stop commands. ▲

Press enter to get the input type to flash. Use the up and down arrows to bring up the desired input: **volts**, **mv** or **ma**. With the desired input displayed press enter again to accept the change.

With **RELAY1** or **RELAY2** highlighted press enter to bring up the corresponding **RELAY** display. Highlight the desired error(s) and press enter. Enabled errors are indicated by are indicated by ■ .

Note Except for **Warning**, errors will automatically clear once the condition is corrected. **Warning** also requires pressing enter once the condition is corrected.

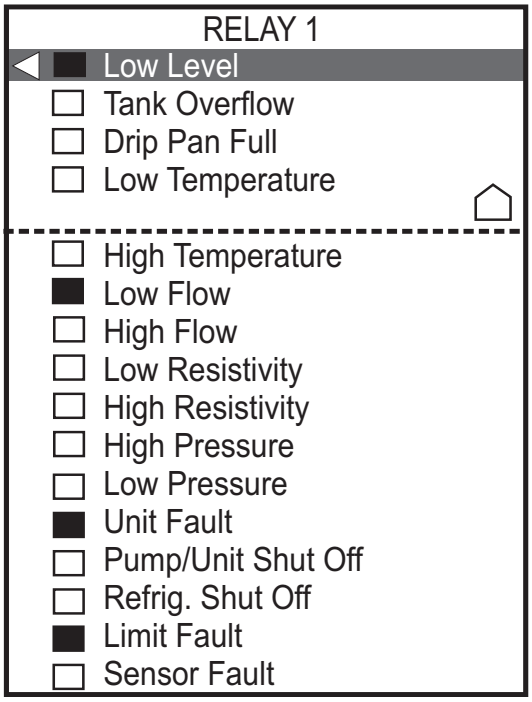

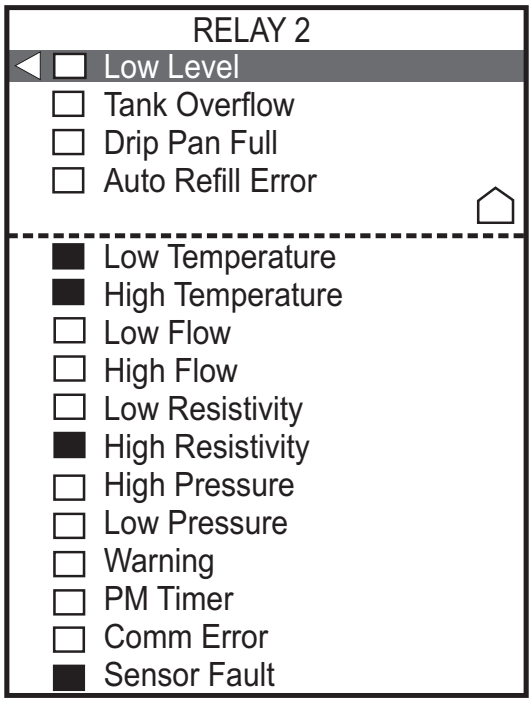

USER RANGE SETTINGS

This menu allows the you to customize the scaling of the analog input and DAC output to meet the application needs. With **USER RANGE SETTINGS** highlighted press enter to display:

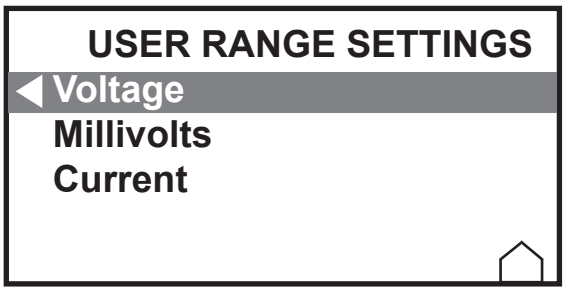

The ThermoFlex supports three standard analog interface types and defaults to the following scaling:

Voltage	0v – 10v = the operating range of the chiller (5° – 40° in standard chillers, 5° – 90° in high temp chillers)
MilliVolts	10mv/°C
Current	4ma – 20ma = the operating range of the chiller

The following values reflect the standard scaling and are the factory defaults:

Voltage (0v – 10v = the operating range of the chiller)

High volts	**10.0v**
Low volts	**0.0v**
High temp	**40.0°** *(standard temp chillers),* **90.0°** *(high temp chilers)*
Low temp	**5.0°**

With **Voltage** highlighted press enter to display:

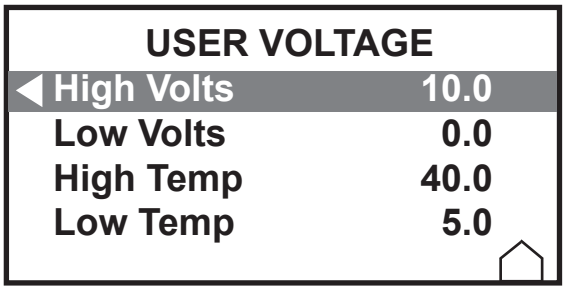

Highlight the desired value and then press enter, the highlight will flash. Use the up and down arrows to change the value. Once the desired value is displayed press enter to accept the change and stop the flashing.

These values are used to calculate a gain and offset and are applied to the setpoint input voltage.

VoltageInputGain = (high temp – low temp) / (high volt – low volt)
VoltageInputOffset = high temp – (high volt * VoltageInputGain)

The default settings for a high temp chiller will yield the following gain and offset for setpoint input:

VoltageInputGain = (90 – 5) / (10 – 0) = 8.5
VoltageInputOffset = 90 – (10 * 8.5) = 5

Now 10v will yield a setpoint of 90°. (10 * gain) + offset
(10v * 8.5) + 5 = 90°
It could just as easily be configured for other ranges such as:
1v – 9v = 5° - 150°. However the chiller will only recognize a set point between 5° - 90°.

A separate gain and offset is also be calculated and are applied to the DAC temperature output value.

VoltageOutputGain = (high volt – low volt) / (high temp – low temp)
VoltageOutputOffset = high volt – (high temp * VoltageOutputGain)

The default settings for a high temp chiller will yield the following gain and offset for temperature output:

VoltageOutputGain = (10 – 0) / (90 – 5) = 0.117647
VottageOutputOffset = 10 – (90 * 0.117647) = -0.58823

Now 90° will output 10v. (90 * gain) + offset
(90° * 0.117647) + (-0.58823) = 10.0v

The following values are the factory defaults for the millivolt setting that will effectively yield 10mv/°C:

MilliVolts (10mv/°C)

High mv	**1000.0mv**
Low mv	**0.0mv**
High temp	**100.0°**
Low temp	**0.0°**

With **Millivolts** highlighted press enter to display:

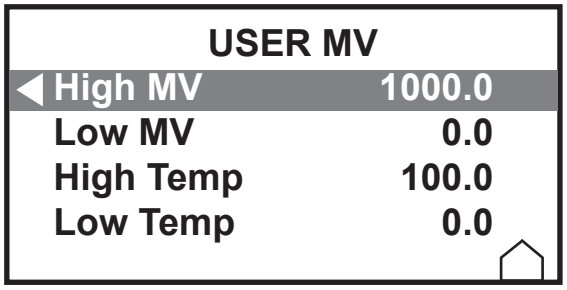

Highlight the desired value and then press enter, the highlight will flash. Use the up and down arrows to change the value. Once the desired value is displayed press enter to accept the change and stop the flashing.

These values are used to calculate a gain and offset and are applied to the set point input voltage.

MilliVoltInputGain = (high temp – low temp) / (high mv – low mv)
MilliVoltInputOffset = high temp – (high mv * MilliVoltInputGain)

So that the default settings will yield the following gain and offset for set point input:

MilliVoltInputGain = (100 – 0) / (1000 – 0) = 0.1
MilliVoltInputOffset = 100 – (1000 * 0.1) = 0

Now 100mv will yield a set point of 10° ((100 * gain) + offset))
(100mv * 0.1) + 0 = 10.0° = 10mv/°C

Just like voltage the mv range can be set for other ranges.

A separate gain and offset will also be calculated and are applied to the DAC temperature output value.

MilliVoltOutputGain = (high mv – low mv) / (high temp – low temp)
MiliVoltOutputOffset = high mv – (high temp * MilliVoltOutputGain)

So that the default settings will yield the following gain and offset for temperature output.

MilliVoltOutputGain = (1000 – 0mv) / (100 – 0) = 10
MilliVoltOutputOffse = 1000 – (100 * 10) = 0

Now 10° will output 100mv ((10 * gain) + offset)
(10° * 10) + 0 = 100mv = 10mv/°C

The following values reflect the standard scaling and are the factory defaults:

Current (4ma – 20ma = the operating range of the chiller)

High ma	**20.0ma**
Low ma	**4.0ma**
High temp	**40.0°** *(standard temp chillers)* **90.0°** *(high temp chillers)*
Low temp	**5.0°**

With **Current** highlighted press enter to display:

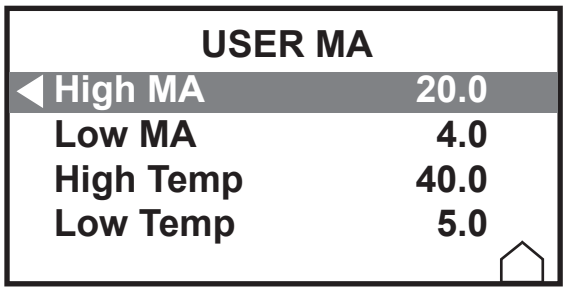

Highlight the desired value and then press enter, the highlight will flash. Use the up and down arrows to change the value. Once the desired value is displayed press enter to accept the change and stop the flashing.

Calculating the default gain and offset for set point input for a high temp chiller:

MilliAmpInputGain = (high temp – low temp) / (high ma – low ma)
MilliAmpInputOffset = high temp – (high ma * MilliAmpInputGain)

The default settings for a high temp chiller will yield the following gain and offset for setpoint input:

MilliAmpInputGain = (90.0 – 5.0) / (20.0 – 4.0) = 5.3125
MilliAmpInputOffset = 90 – (20 * 0.188235) = -16.25

Now 20ma will represent a setpoint of 90°
(20.0 * 5.3125) + (-16.25) = 90.0°

A separate gain and offset will also be calculated and are be applied to the DAC temperature output value.

MilliAmpOutputGain = (high ma – low ma) / (high temp – low temp)
MilliAmpOutputOffset = high ma – (high temp * MilliAmpOutputGain)

The default settings for a high temp chiller will yield the following gain and offset for temperature output:

MilliAmpOutputGain = (20.0 – 4.0) / (90 – 5) = 0.188235294
MilliAmpOutputOffset = 20 – (90 * 0.188235) = 3.058823529

Now 90° = 20ma temperature output.
(90 * 0.188235294) + 3.058823529 = 20ma

Note: Ensure that there is sufficient range in the voltage or current to provide enough resolution of temperature. For example a voltage range of 0v – 1v to represent a temperature range of 0° - 150° would not have enough resolution to provide stable readings.

Remote Sensor Connector Pinout

Table 1

Pin	
1	White
2	NA
3	NA
4	White
5	NA
6	NA
7	Red
8	NA
9	Red (4th wire not connected to the control board)

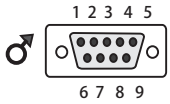

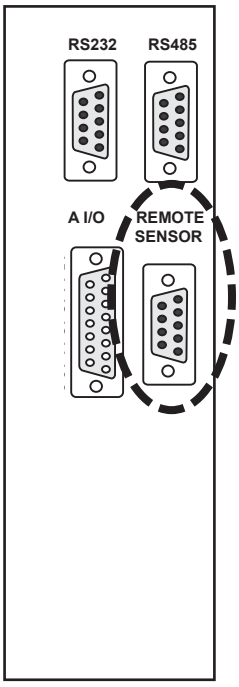

Figure D-2 Remote Sensor Connector

WARNING

Never apply line voltage to any of the connections. ▲

CAUTION

When operating a ThermoFlex7500-10000 with the remote sensor enabled ensure the chiller's response to lowering the setpoint does not result in operation below 10°C process temperature. Operation below 10°C requires the use of 50/50 EG/water or 50/50 PG/water. ▲

ThermoFisher SCIENTIFIC

Laboratory Equipment Div.
25 Nimble Hill Road
Newington, NH 03801

DECLARATION OF CONFORMITY

Manufacturer: Thermo Fisher Scientific

Address: 25 Nimble Hill Road
Newington, NH 03801

We declare that the equipment named below has been designed to comply with the relevant sections of the below referenced specifications and is in accordance with the requirements of the indicated directives.

Product: Refrigerated Chiller and Heat Exchanger for Fluids for Process Control Applications

Models: ThermoFlex Models TF 900 (10), TF 1400 (11), TF 2500 (12), TF3500 (13), TF5000 (14),TF7500 (15), TF10000 (16), TF15000 (17), TF20000 (18), TF24000 (19), as indicated by the first two numbers of the Part Number as shown in the parenthesis

Directives and Standards:

2014/30/EC ± Electromagnetic Compatibility Directive (EMC)

- EN 61326-1: 2013 Electrical equipment for measurement, control, and laboratory use - EMC requirements. General requirements

2014/35/EC - Low Voltage Directive (LVD):

- EN 61010-1: 2010 Safety requirements for electrical equipment for measurement, control, and laboratory use -- Part 1: General requirements.
- EN 61010-2-010: 2003 Safety requirements for electrical equipment for measurement, control, and laboratory use - Part 2-010: Particular requirements for laboratory equipment for the heating of materials

Authorised representative in the EC:

Name: Thermo Fisher Scientific

Address: Dieselstrasse 4
76227 Karlsruhe Germany

On behalf of the manufacturer:

Date: 11 April 2016

CE13

Mark Sinclair
R&D Director
Laboratory Equipment Division
Thermo Fisher Scientific
Newington, NH, USA

WARRANTY

Thermo Fisher Scientific warrants for 24 months (**excluding MD1/MD2 Magnetic Drive and P1/P2 Positive Displacement pumps which are warranted for 12 months**) from date of shipment the Thermo Scientific ThermoFlex chiller according to the following terms.

Any part of the chiller manufactured or supplied by Thermo Fisher Scientific and found in the reasonable judgment of Thermo Fisher to be defective in material or workmanship will be repaired at an authorized Thermo Fisher Repair Depot without charge for parts or labor. The chiller, including any defective part must be returned to an authorized Thermo Fisher Repair Depot within the warranty period. The expense of returning the chiller to the authorized Thermo Fisher Repair Depot for warranty service will be paid for by the buyer. Our responsibility in respect to warranty claims is limited to performing the required repairs or replacements, and no claim of breach of warranty shall be cause for cancellation or recision of the contract of sales of any chiller. With respect to chillers that qualify for field service repairs, Thermo Fisher Scientific's responsibility is limited to the component parts necessary for the repair and the labor that is required on site to perform the repair. Any travel labor or mileage charges are the financial responsibility of the buyer.

The buyer shall be responsible for any evaluation or warranty service call (including labor charges) if no defects are found with the Thermo Scientific product.

This warranty does not cover any chiller that has been subject to misuse, neglect, or accident. This warranty does not apply to any damage to the chiller that is the result of improper installation or maintenance, or to any chiller that has been operated or maintained in any way contrary to the operating or maintenance instructions specified in this Instruction and Operation Manual. This warranty does not cover any chiller that has been altered or modified so as to change its intended use.

In addition, this warranty does not extend to repairs made by the use of parts, accessories, or fluids which are either incompatible with the chiller or adversely affect its operation, performance, or durability.

Thermo Fisher Scientific reserves the right to change or improve the design of any chiller without assuming any obligation to modify any chiller previously manufactured.

THE FOREGOING EXPRESS WARRANTY IS IN LIEU OF ALL OTHER WARRANTIES, EXPRESSED OR IMPLIED, INCLUDING BUT NOT LIMITED TO WARRANTIES OR MERCHANTABILITY AND FITNESS FOR A PARTICULAR PURPOSE.

OUR OBLIGATION UNDER THIS WARRANTY IS STRICTLY AND EXCLUSIVELY LIMITED TO THE REPAIR OR REPLACEMENT OF DEFECTIVE COMPONENT PARTS AND Thermo Fisher Scientific DOES NOT ASSUME OR AUTHORIZE ANYONE TO ASSUME FOR IT ANY OTHER OBLIGATION.

Thermo Fisher Scientific ASSUMES NO RESPONSIBILITY FOR INCIDENTAL, CONSEQUENTIAL, OR OTHER DAMAGES INCLUDING, BUT NOT LIMITED TO LOSS OR DAMAGE TO PROPERTY, LOSS OF PROFITS OR REVENUE, LOSS OF THE CHILLER, LOSS OF TIME, OR INCONVENIENCE.

This warranty applies to chillers sold by Thermo Fisher Scientific. (Refer to the warranty for chillers sold by the affiliated marketing company of Thermo Fisher Scientific for any additional terms.) This warranty and all matters arising pursuant to it shall be governed by the law of the State of New Hampshire, United States. All legal actions brought in relation hereto shall be filed in the appropriate state or federal courts in New Hampshire, unless waived by Thermo Fisher Scientific.

Thermo Fisher Scientific
81 Wyman Street
P.O. Box 9046
Waltham, Massachusetts 02454-9046
United States

www.thermofisher.com

Thermo SCIENTIFIC

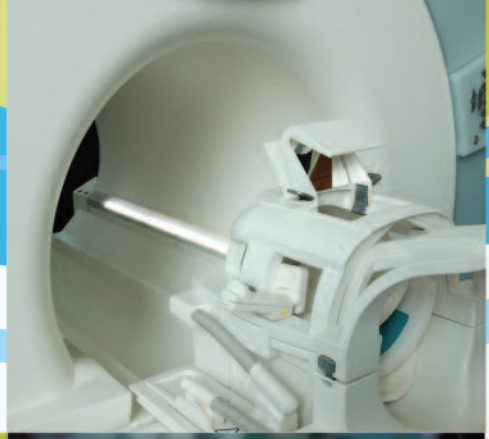

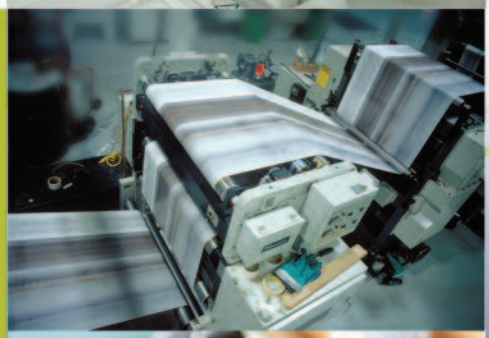



Typical Applications

Analytical

Biotech

Industrial

Laser

Metrology

Pharmaceutical

Packaging

Printing

Research



Thermo Scientific
ThermoFlex Series Recirculating Chillers

configurable,
innovative, performance

Thermo
SCIENTIFIC

The Ideal Choice

Temperature control products for your application

As an innovative leader in temperature control, **we have the expertise to enable our customers to optimize liquid cooling and heating applications.** With over 50 years of service and countless successful installations around the world, we collaborate with you to provide product and applications expertise to meet the most demanding temperature control requirements. From biotech and pharmaceutical to printing and semiconductor, companies around the world, continue to make Thermo Scientific temperature control products the ideal choice.

Select the product that is right for your application from a comprehensive portfolio of temperature control solutions that deliver scalable product offerings ranging from bench top research to large process manufacturing. Our new and innovative products – developed from customer feedback – represent a leap forward in performance, configurability and technology that provide the following advantages:

The Ideal Choice: Whatever your application or your budget, you can configure a flexible, cost-effective temperature control system that suits your specific requirements.

Innovation: Our research and development team is focused on designing innovative products based on your feedback.

Global Service and Support: With our extensive global footprint, service and support are readily available by phone or the web.



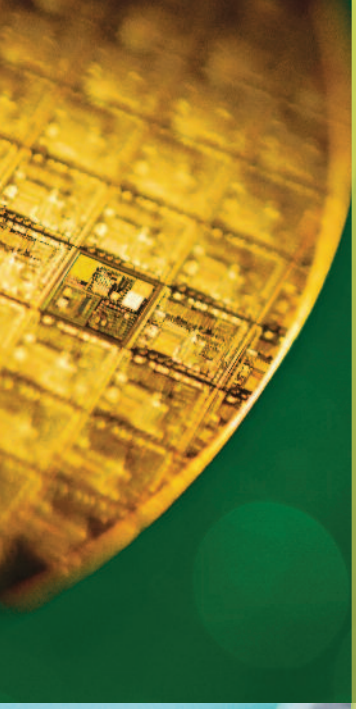





Thermo Scientific ThermoFlex Series recirculating chillers

Configurable Design: Choose from a wide range of cooling capacities and options to create the perfect fit for your application.

Innovative Platform: Developed with your input from concept to design. The result is an easy-to-use, easy-to-maintain high performance chiller configurable to the most demanding applications.

Excellent Performance: Optimized cooling capacity and reliability for your critical application needs.

Choose your controller

Feature	Standard	Deluxe[1]
LCD Multi-line display		●
LED Single-line display	●	
Alphanumeric display		●
Temperature alarms	●	●
Pressure alarms	●	●
Flow alarms	●	●
Fluid level readout		●

[1] *Deluxe controller is available on the ThermoFlex 900 - 10000 models only.*

See last page for list of accessories!

Choose your features

Feature	Benefit	Availability
Pressure Relief[4]	The internal pressure relief valve allows you to limit the maximum fluid pressure to meet the application requirements .	900 to 10000
Pressure Relief with Flow Readout[4]	The pressure relief valve allows you to limit the maximum fluid pressure to meet the application requirements. The flow readout allows you to monitor the flow rate to the application and set flow alarms via the controller.	900 to 10000
Flow Control with Flow Readout	The flow control valve allows you to adjust the flow to the application. Monitor flow rate to application and set flow alarms via controller.	All models
Global Voltage	Select the appropriate frequency and voltage to enable operation anywhere in the world.	900 to 10000
SEMI S2 Compliance	Compliant with S2-0703, S8-0705, S14-0704, F47-0706. Includes EMO capability/LOTO circuit breaker (GFCI available on standard temperature range).	900 to 10000
Water-Cooled Condenser	Reduces heat rejection into your workspace by using facility water.	1400-24000
Air-Cooled Condenser	Simplified instillation (no facility water required).	All models
Anti Drainback	Prevents fluid from flowing back to the reservoir when the chiller is installed below the application.	All models
Auto Refill	Automatic refilling from a facility-supplied water source to ensure the proper fluid level is maintained.	All models
DI Water[2]	Partial flow internal DI (De-ionized water support) cartridge minimizes foot-print and provides fluid resistivity between 1- 3 MΩ - cm.	All models
DIC Water[3]	Partial flow internal DI cartridge minimizes footprint and provides fluid resistivity between 1-3 M-cm with DI level control/monitoring on delux controller.	900 -10000
RS232 & RS485 Digital/Analog Communication	Provides analog and digital communication for remote operation, monitoring and data logging. Includes a remote sensor port which allows for remote temperature control of an application when used with remote sensor (available as an accessory).	All models

[2] *Basic controller only*
[3] *Deluxe controller and Standard Temperature range only*
[4] *P1, P2, and T1 pumps only*

900 to 2500 watts of cooling







Specifications	ThermoFlex 900	ThermoFlex 1400	ThermoFlex 2500
Standard Setpoint Temperature Range	5 °C to 40 °C (41 °F to 104 °F)		
Optional Setpoint Temperature Range	—	5 °C to 90 °C (41 °F to 194 °F)	
Ambient Temperature Range	10 °C to 40 °C (50 °F to 104 °F)		
Temperature Stability	±0.1 °C		
Standard Cooling Capacity 60 Hz at 20°C 50 Hz at 20°C	900 W / 3074 BTU 750 W / 2651 BTU	1400 W / 4781 BTU 1170 W / 3996 BTU	2500 W / 8538 BTU 2200 W / 7513 BTU
Reservoir Volume	7.2 Liters (1.9 gallons)		
Refrigerant	R134A		
Physical Dimensions (H x W x D) Air-Cooled	27.3 x 14.2 x 24.6 in (69.2 x 36.0 x 62.4 cm)	27.3 x 14.2 x 24.6 in (69.2 x 36.0 x 62.4 cm)	29.0 x 17.2 x 26.5 in (73.6 x 43.6 x 67.3 cm)
Water-Cooled	—	27.3 x 14.2 x 24.6 in (69.2 x 36.0 x 62.4 cm)	29.0 x 17.2 x 26.5 in (73.6 x 43.6 x 67.3 cm)
P1 — Positive Displacement Pump 60 Hz	2.1 gpm @ 60 psig (7.9 lpm @ 4.1 bar)		
50 Hz	1.7 gpm @ 60 psig (6.4 lpm @ 4.1 bar)		
P2 — Positive Displacement Pump 60 Hz	4.0 gpm @ 60 psig (15.1 lpm @ 4.1 bar)		
50 Hz	3.3 gpm @ 60 psig (12.5 lpm @ 4.1 bar)		
T1 — Turbine Pump* 60 Hz	3.5 gpm @ 60 psid (13.2 lpm @ 4.1 bar)		
50 Hz	2.5 gpm @ 60 psid (9.5 lpm @ 4.1 bar)		
Chiller Weight (with P2 pump)	130.5 lb (59.2 kg)		175.5 lb (79.6 kg)
Voltage Options 115 V/60 Hz & 100 V/50 Hz [1,2] 100 V/60 Hz & 100 V/50 Hz [1,2] 208-230 V/60 Hz & 200 V/50 Hz [1,2] 230 V/50 Hz[1] 200-230 V/50-60 Hz Global Voltage [1,2]	 Available Available Available Available Available		 — — Available Available Available
Compliance	CE C SP US 105974_C_000		[1] *CE compliant* [2] *CSA compliant*

Specifications obtained at sea level using water as the recirculating fluid, at a +20°C process setpoint, +25°C ambient condition, at nominal operating voltage. Other fluids, process temperatures, ambient temperatures, altitude or operating voltages will affect performance. Specifications subject to change.

**Pressure values for turbine pumps are differential pressures between the inlet and the outlet of the chiller.*

pumping capacity

P1 & P2 Pump

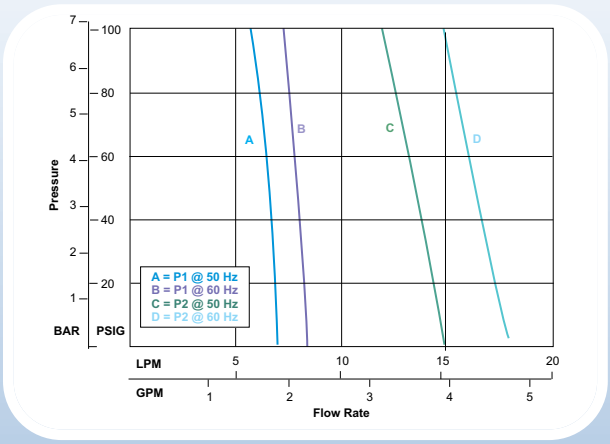

T1 Pump

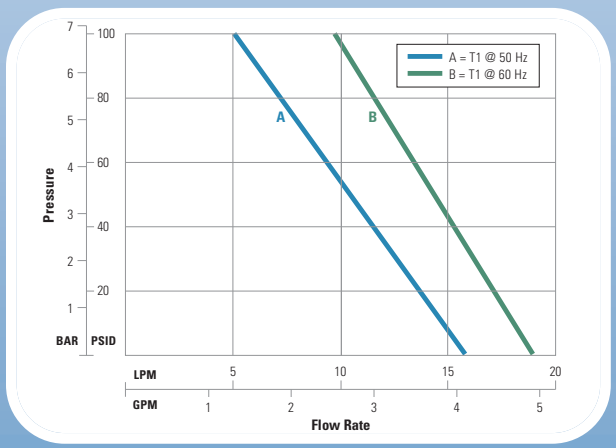

cooling capacity

ThermoFlex 900, 1400 & 2500

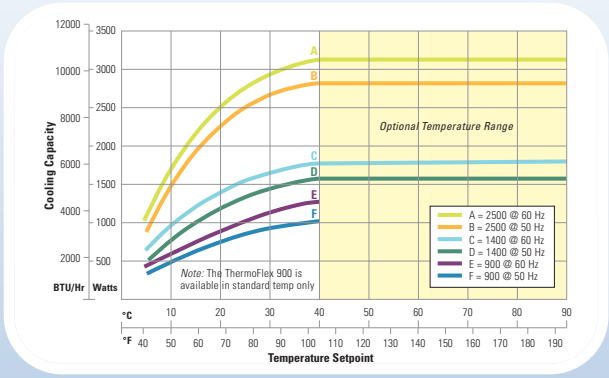

Cooling capacity based on chillers with P2 pumps set at 10 gpm.
Other pumps and flow rates will affect cooling capacity performance.

Full flow filter ensures clean fluid to protect your application and maximize recirculation system life.

Easily removable condenser grill and air filter allow for quick and simple cleaning to optimize chiller performance and maximize component life.

Integrated funnel for easy filling.

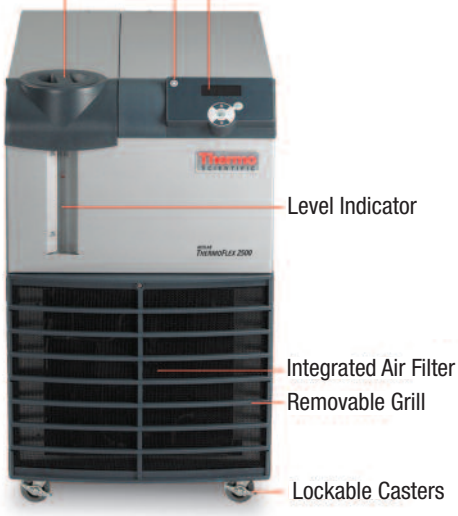

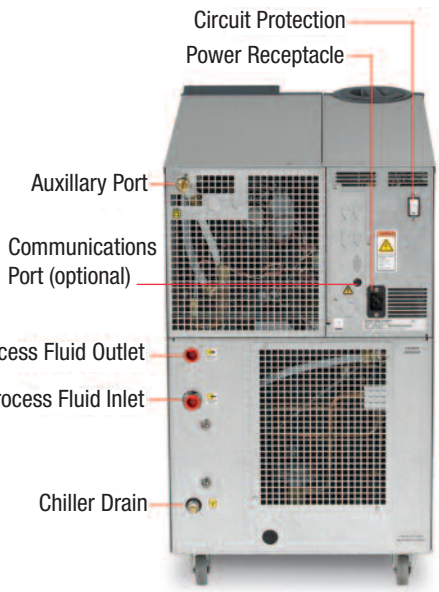

3500 to 10000 watts of cooling






Specifications	ThermoFlex 3500	ThermoFlex 5000	ThermoFlex 7500	ThermoFlex 10000
Standard Temperature Range	5 °C to 40 °C (41 °F to 104 °F)			
Optional Temperature Range	5 °C to 90 °C (41 °F to 194 °F)			
Ambient Temperature Range	10 °C to 40 °C (50 °F to 104 °F)			
Temperature Stability	±0.1 °C			
Standard Cooling Capacity 60 Hz at 20°C 50 Hz at 20°C	3500 W / 11953 BTU 3050 W / 10416 BTU	5000 W / 17076 BTU 4400 W / 15027 BTU	7500 W / 25575 BTU 6425 W / 21910 BTU	10000 W / 34100 BTU 8500 W / 28985 BTU
Reservoir Volume	7.2 Liters (1.9 gallons)		17.9 Liters (4.8 gallons)	
Refrigerant	R407C			
Physical Dimensions (H x W x D) Air-Cooled	38.9 x 19.3 x 30.9 in (98.7 x 48.8 x 78.4 cm)		52.3 x 25.2 x 33.8 in (132.7 x 63.9 x 85.6 cm)	
Water-Cooled	38.9 x 19.3 x 30.9 in (98.7 x 48.8 x 78.4 cm)		45.9 x 25.2 x 33.8 in (116.6 x 63.9 x 85.6 cm)	
P1 — Positive Displacement Pump 60 Hz	2.1 gpm @ 60 psig (7.9 lpm @ 4.1 bar)	—	—	—
50 Hz	1.7 gpm @ 60 psig (6.4 lpm @ 4.1 bar)	—	—	—
P2 — Positive Displacement Pump 60 Hz	4.0 gpm @ 60 psig (15.1 lpm @ 4.1 bar)			
50 Hz	3.3 gpm @ 60 psig (12.5 lpm @ 4.1 bar)			
T1 — Turbine Pump* 60 Hz	3.5 gpm @ 60 psid (13.2 lpm @ 4.1 bar)		—	—
50 Hz	2.5 gpm @ 60 psid (9.5 lpm @ 4.1 bar)		—	—
T5 — Turbine Pump* 60 Hz	—	—	7.3 gpm @ 60 psid (27.6 lpm @ 4.1 bar)	
50 Hz	—	—	6.2 gpm @ 60 psid (23.5 lpm @ 4.1 bar)	
P3 — Centrifugal Pump* 60 Hz	10 gpm @ 32 psid (37.9 lpm @ 2.2 bar)			
50 Hz	10 gpm @ 20 psid (37.9 lpm @ 1.4 bar)			
P4 — Centrifugal Pump* 60 Hz	15 gpm @ 57 psid (56.8 lpm @ 3.9 bar)		—	—
50 Hz	15 gpm @ 34 psid (56.8 lpm @ 2.3 bar)		—	—
P5 — Centrifugal Pump* 60 Hz	—	—	20 gpm @ 60 psid (75.7 lpm @ 4.1 bar)	
50 Hz	—	—	20 gpm @ 35 psid (75.7 lpm @ 2.4 bar)	
Chiller Weight (with P2 pump)	264 lb (120 kg)		356 lb (161.5 kg)	
Voltage Options 208-230 V/60 Hz & 200 V/50 Hz [1,2] 230 V/50 Hz[1] 200-230 V/50-60 Hz Global Voltage [1,2] 208-230 V/60 Hz/3 phase & 200V/50 Hz [1,2] 400 V/50 Hz/3 phase 460 V/60 Hz/3 phase & 400 V/50 Hz/3 phase [1,2]	 Available Available Available — — —		 — — — Available Available Available	
Compliance *T5 Pump CSA compliance pending*	CE 105974_C_000		[1] *CE compliant* [2] *CSA compliant*	

Specifications obtained at sea level using water as the recirculating fluid, at a +20°C process setpoint, +25°C ambient condition, at nominal operating voltage. Cooling capacity based on chillers with P2 pumps with no backpressure. Other pumps will affect cooling capacity performance. Specifications subject to change.

**Pressure values for centrifugal and turbine pumps are differential pressures between the inlet and the outlet of the chiller.*

pumping capacity

P1 & P2 Pump

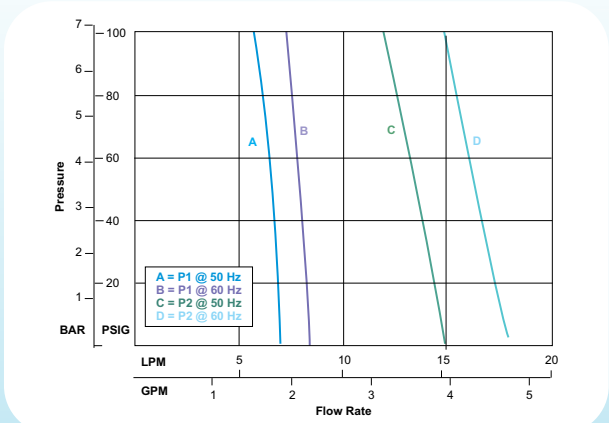

P3 & P4 Pump

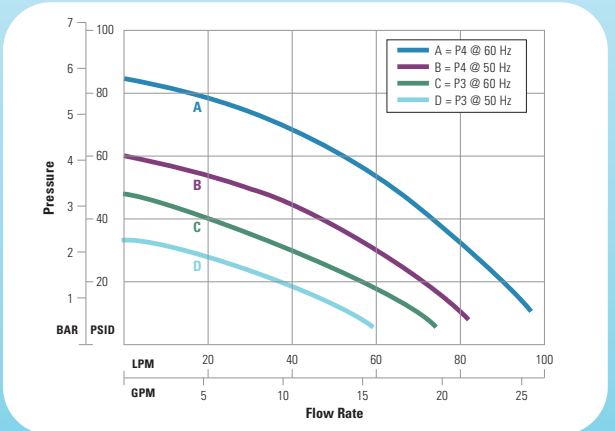

P5 Pump

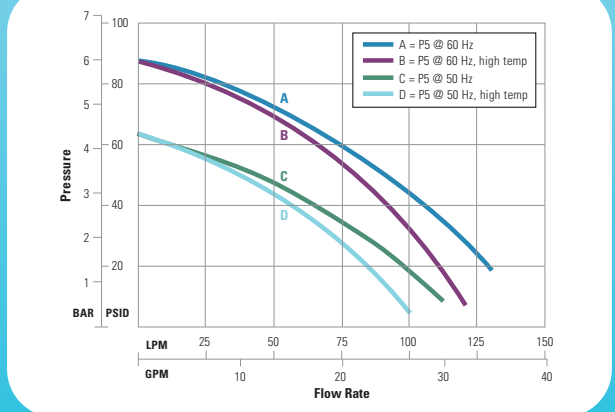

cooling capacity

ThermoFlex 3500 & 5000

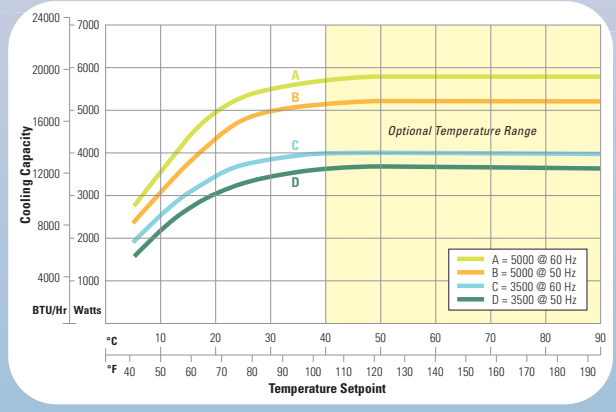

Cooling capacity based on chillers with P2 pumps with no backpressure. Other pumps will affect cooling capacity performance.

ThermoFlex 7500 & 10000

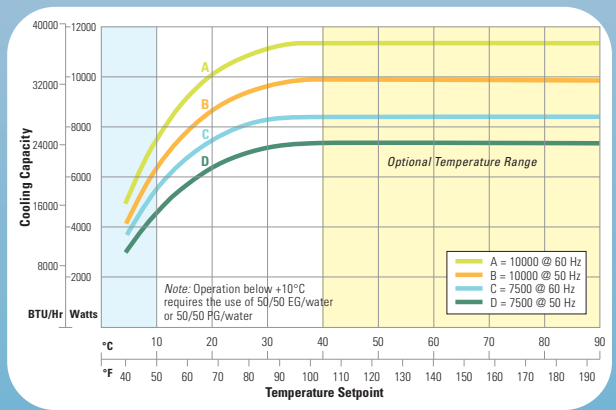

Cooling capacity based on chillers with P2 pumps with no backpressure. Other pumps will affect cooling capacity performance

T5 Pump

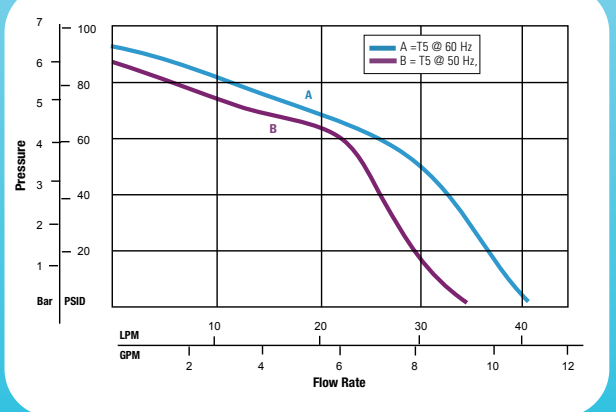

15000 to 24000 series

15000 to 24000 watts of cooling



Specifications	ThermoFlex 15000	ThermoFlex 20000	ThermoFlex 24000
Standard Temperature Range	5 °C to 40 °C (41 °F to 104 °F)		
Ambient Temperature Range	10 °C to 40 °C (50 °F to 104 °F)		
Temperature Stability	±0.1 °C		
Standard Cooling Capacity 60 Hz at 20°C 50 Hz at 20°C	15000 W / 51228 BTU 12525 W / 42775 BTU	20000 W / 68304 BTU 16700 W / 57043 BTU	24000 W/ 81964 BTU 21000 W/ 71719 BTU
Reservoir Volume	17.9 liters (4.75 gallons)		
Refrigerant	R407C		
Physical Dimensions (H x W x D) Air-Cooled	49.0 x 46.5 x 30.9 in (124.4 x 118.1 x 78.6 cm)		58.6 x 46.5 x 30.9 in (148.9 x 118.1 x 78.6 cm)
Water-Cooled	49.0 x 46.5 x 30.9 in (124.4 x 118.1 x 78.6 cm)		
P3 — Centrifugal Pump* 60 Hz	10 gpm @ 32 psid (37.9 lpm @ 2.2 bar)		
50 Hz	10 gpm @ 20 psid (37.9 lpm @ 1.4 bar)		
P5 — Centrifugal Pump* 60 Hz	20 gpm @ 60 psid (75.7 lpm @ 4.1 bar)		
50 Hz	20 gpm @ 35 psid (75.7 lpm @ 2.4 bar)		
Chiller Weight (with P3 pump)	550 lb (249.5 kg)		650 lb (294.8 kg)
Voltage Options			
208-230 V/60 Hz/3 phase [1,2]	Available		
460 V/60 Hz/3 phase & 400 V/50 Hz/3 phase [1,2]	Available		
Compliance	CE C SP US 105974_C_000	[1] *CE compliant* [2] *CSA compliant*	

*Specifications obtained at sea level using water as the recirculating fluid at a +20°C process setpoint, +25°C ambient condition, at nominal operating voltage. Other fluids, process temperatures, ambient temperatures, altitude, or operating voltages will affect performance. *Pressure values for centrifugal pumps are the differential between the inlet and the outlet of the chiller. Specifications subject to change.*

pumping capacity

Pumping Capacity for Pump Options P3 & P5

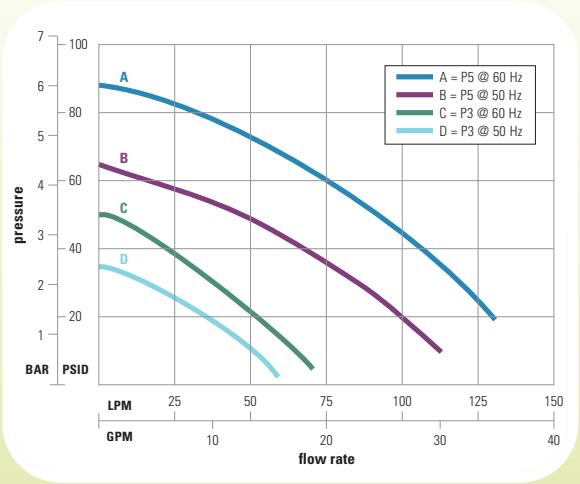

cooling capacity

ThermoFlex 15000/20000/24000

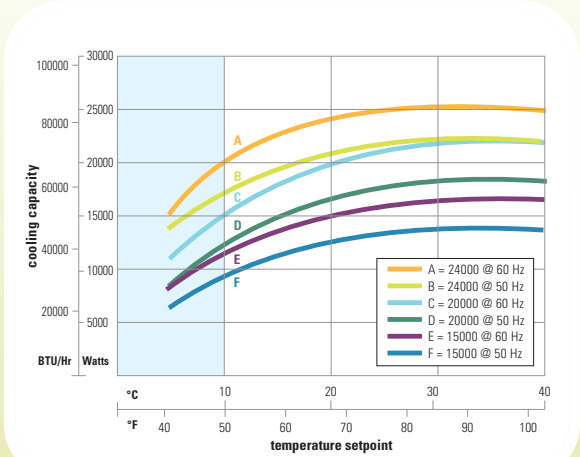

Cooling capacity based on chiller with P3 pumps with no backpressure.
Other pumps will affect cooling capacity performance.

Note: Operation below +10°C requires the use of 50/50 EG/water or 50/50 PG/water

Coming Soon! T9 Pump

60 Hz -15 gpm @ 85 psid (56 lpm @ 5.9 bar)
50 Hz - 15 gpm @ 75 psid (56 lpm @ 5.2 bar)
Increased flow and pressure for your demanding applications!

Full flow filter ensures clean fluid to protect your application and maximize recirculation system life.

Easily removable condenser grill and air filter allow for quick and simple cleaning to optimize chiller performance and maximize component life.

Integrated funnel fill for easy filling.

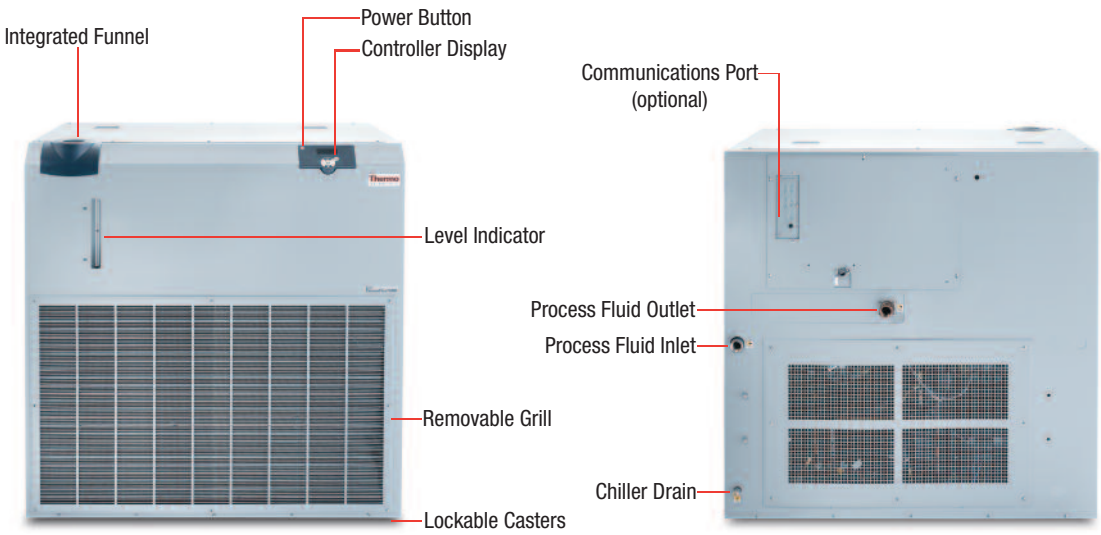

Part Number	Accessories
Seismic Tiedowns	
097374	Seismic Tiedown Kit for ThermoFlex 900-2500
095139	Seismic Tiedown Kit for ThermoFlex 3500 - 5000
096502	Seismic Tiedown Kit for ThermoFlex 7500 - 10000
Plumbing Packages	
599000000012	50' of 1"ID Polybraid hose comes with 1" hose barbs, insulation and clamps. For use with the ThermoFlex 7500 - 24000 with the P3, P5 and T5 pumps
599000000011	25' of 1"ID Polybraid hose comes with 1" hose barbs, insulation and clamps. For use with the ThermoFlex 7500 - 24000 with the P3, P5 and T5 pumps
611000000107	10m Standard Temp Plumbing Package for all ThermoFlex 3500 - 5000 with P3, P4 pumps (3/4" NPT)
611000000105	50' High Temp Plumbing Package for all ThermoFlex 900 - 10000 with P1, P2 or T1 pumps (1/2" NPT)
611000000104	25' High Temp Plumbing Package for all ThermoFlex 900 - 10000 with P1, P2 or T1 pumps (1/2" NPT)
611000000100	50' Standard Temp Plumbing Package for all ThermoFlex 900 - 10000 with P1, P2 or T1 pumps (1/2" NPT)
611000000004	25' Standard Temp Plumbing Package for all ThermoFlex 900 - 10000 with P1, P2 or T1 pumps (1/2" NPT)
Filter Bags	
598000000002	2 ea. 35 micron replacement filter bags for ThermoFlex 900 - 5000
598000000003	2 ea. 100 micron replacement filter bags for ThermoFlex 900 - 5000
598000000004	2 ea. 100 micron replacement filter bags and 1 ea. Front grill/filter for ThermoFlex 900 - 1400
598000000005	2 ea. 35 micron replacement filter bags and 1 ea. Front grill/filter for ThermoFlex 900 - 1400
598000000006	2 ea. 100 micron replacement filter bags and 1 ea. Front grill/filter for ThermoFlex 2500
598000000007	2 ea. 35 micron replacement filter bags and 1 ea. Front grill/filter for ThermoFlex 2500
598000000008	2 ea. 100 micron replacement filter bags and 1 ea. Front grill/filter for ThermoFlex 3500 - 5000
598000000009	2 ea. 35 micron replacement filter bags and 1 ea. Front grill/filter for ThermoFlex 3500 - 5000
598000000013	2 ea. 35 micron replacement filter bags and 1 ea. Front grill/filter for ThermoFlex 7500 - 10000
598000000014	2 ea. 100 micron replacement filter bags and 1 ea. Front grill/filter for ThermoFlex 7500 - 10000
611000000101	2 ea. 35 micron replacement filter bags for ThermoFlex 7500 - 24000
611000000102	2 ea. 100 micron replacement filter bags for ThermoFlex 7500 - 24000
598000000015	2 ea. 250 micron replacement filter bags for ThermoFlex 7500 - 24000
Fittings	
598000000011	2 ea. 1/2" MPT to 3/8" ID brass hose barbs. For use with ThermoFlex 900 - 10000 with P1, P2 or T1 pumps (1/2" NPT)
External Pressure Reducers	
342000000025	External Pressure Reducer for use with ThermoFlex 900 - 10000 with P1, P2 or T1 pumps (1/2" NPT)
342000000026	External Pressure Reducer for use with ThermoFlex 3500 - 5000 with P3 or P4 pumps. (3/4" NPT)
342000000027	External Pressure Reducer for use with ThermoFlex 7500 - 24000 with P3, P5, T5 and T9 pumps (1" NPT)
External Flow Control Kits	
611000000106	External Flow Control Kit for use with ThermoFlex 900 - 10000 with P1, P2 or T1 pumps (1/2" NPT)
342000000028	External Flow Control Kit for use with hermoFlex 3500 - 5000 with P3 or P4 pumps. (3/4" NPT)
342000000029	External Flow Control Kit for use with ThermoFlex 7500 - 24000 with P3, P5, T5 and T9 pumps (1" NPT)
Communication Cable	
426000000044	25' RS232/RS485 Communication Cable Assembly. Fits all chillers with RS232/RS485 with digital communication option
Software	
422000000004	NEScom control/monitoring PC software

© 2013 Thermo Fisher Scientific Inc. All rights reserved. All trademarks are the property of Thermo Fisher Scientific Inc. and its subsidiaries. Results may vary under different operating conditions. Specifications, terms and pricing are subject to change. Not all products are available in all countries. Please consult your local sales representative for details.

www.thermoscientific.com/thermoflex

North America: USA/Canada tollfree: +1 (800) 258-0830; USA: +1 (603) 436-9444 or info.tc.us@thermofisher.com
Europe: Benelux: +31 (0) 76 579 55 55 or info.tc.nl@thermofisher.com; France: +33 (0) 1 60 92 48 00 or info.tc.fr@thermofisher.com;
Germany: +49 (0) 721 4 09 44 44 or info.tc.de@thermofisher.com; United Kingdom: +44 (0) 8706 099 254
Asia: China: +81 3 5826 1616 or info.tc.china@thermofisher.com; India: +91 (22) 27 78 11 01 or contact.lpg.in@thermofisher.com;
Japan: +81-3-5826-1616 or info.lpg.jp@thermofisher.com

Thermo SCIENTIFIC
Part of Thermo Fisher Scientific

Effective Date: 7/87 Revision: A Supports System Code: 2

MAX REQUIREMENT FOR BOTH THERMOSTEAM AND TESTER FLOW RATE IS 12610 SCFM.

INSTRUCTION MANUAL

MODEL TP0412A

THERMOSTREAM® SYSTEM

"THERMOSTREAM" is a Registered Trade Mark of Temptronic Corporation

ALL RIGHTS RESERVED

The text of this publication, or any part thereof, may not be reproduced or transmitted in any form or by any means, electronic or mechanical, including photocopying, recording, storage in an information retrieval system, or otherwise, without the prior written permission of Temptronic Corporation.

NOTICE

Patents have been granted and/or patent applications are pending or are in process of preparation on all our developments.

Manual Number: LM 00620

PREFACE TPO412A MANUAL

Congratulations for selecting Temptronic Corporation's TPO412A ThermoStream® System to resolve your requirements for testing at temperature. Temptronic is the pioneer and leader in Airstream technology and applications since 1974.

This manual provides all the information required by a user to operate and maintain a ThermoStream® TPO412A Code 2 System and should not be used to support a Code 1 system. Applicable changes/updates will be supplied as necessary in a separate package.

The Table of Contents indicates every section and revision letter. In addition, each page is marked with the Effective Date, Revision letter, and Document name. With the exception of Appendices C-1 through C-6 and E every page also indicates Supports System Code: 2.

In the event you have previously operated/maintained a TPO412A System the following information is provided to explain the differences between Code 1 and Code 2 systems.

SOFTWARE CHANGES:

Code 2 information also applies to Code 2A systems which are Code 1 systems with Code 2 software only installed. This upgrade should be done through Temptronic Service Department.

System Code 1	System Code 2
HEAD lowers before raising on initial power on.	HEAD raises - downward action eliminated.

SOFTWARE CHANGES (cont.):

System Code 1	System Code 2
FLOW is on when HEAD is in the raised position requiring the operator to disable.	After the initial 90 second purge, FLOW stops when the HEAD is raised and initiated when lowered automatically. FLOW may be enabled when HEAD is in the up position if desired.
System upper temperature limit is +200°C.	System upper temperature limit is +205°C to enable large components to be brought to +200°C. System temperature specifications are still +200°C.
Air temperature is limited by programmed limits only when operating in DUT mode. Limits which are reprogrammable default to system limits of -70°C/+200°C on power up.	Air temperature is always limited by the current programmed limits. The limits which are reprogrammable default to the system limits of -70°C/+205°C on power up.
Switching of FLOW channels (TRANSITION to TEST) is automatic.	Selection of FLOW channels is possible; Automatic - selected at power on (operation is same as Code 1). TRANSITION - TRANSITION flow rate only. TEST - TEST flow rate only. TRANSITION & TEST - Combined flow rate of both channels.

SOFTWARE CHANGES (cont.):

System Code 1	System Code 2
OVERHEAT or temperature sense error condition will cause the system to disable the heater, open both TEST and TRANSITION channels permitting maximum continual cooling. If operating in the HEAT/COOL mode the system will cool to the maximum lower limit of the refrigeration system unless interrupted.	OVERHEAT or temperature sense error condition will cause the system to disable heater power, open both TEST and TRANSITION flow channnels and permit maximum flow for 10 seconds.
IEEE-488 address switch setting is read only on power up requiring the system to be turned off then on again after changing the switch setting to enter the new address.	IEEE-488 address switch setting is read when the RESET switch is depressed eliminating turning the system off then on to change the address. IEEE-488 software has been upgraded to support these changes. Upgraded IEEE-488 software requires system Code 2 software.
Dryer dessicant tower cycling is every 30 seconds as timed by the microprocessor.	Dryer dessicant tower cycling is every 30 seconds as timed by the microprocessor unless an "AT TEMP" has occurred which causes the timing sequence to be reset to zero (0) allowing another 30 seconds before switching of the towers takes place.

REFRIGERATION CHANGES:

Code 2 information also applies to Code 2B systems which are Code 1 systems with Code 2 refrigeration system only installed. This upgrade should be done through Temptronic Service Department.

System Code 1	System Code 2
Original design released '84.	Package redesigned with some component changes while principle operation remains the same. Noticeable appearance difference is pressure gauges mounted lower right rear corner of package.

TABLE OF CONTENTS

Section		Page	Revision
1	INTRODUCTION AND SPECIFICATIONS	1-1	A
	1-1 Manual Introduction	1-1	
	1-2 System Description	1-1	
	1-3 System Features	1-3	
	1-4 System Specifications	1-5	
	1-5 System Options and Accessories	1-6	
2	UNPACKING AND INSTALLATION	2-1	A
	2-1 Unpacking Information	2-1	
	2-2 Installation Planning	2-3	
	2-3 Input Power	2-4	
	2-4 Repackaging	2-5	
3	SYSTEM OPERATION	3-1	A
	3-1 Assembly Instructions	3-1	
	3-2 Interconnections	3-1	
	3-3 Operating Features	3-1	
	3-3.1 Microprocessor Controller (front pnl)	3-4	
	3-3.2 Microprocessor Controller (back pnl)	3-7	
	3-3.2.1 Microprocessor Controller (front pnl options)	3-8	
	3-3.2.2 Microprocessor Controller (back pnl options)	3-9	
	3-3.4 Power Controller (front pnl)	3-10	
	3-3.5 Power Controller (back pnl)	3-12	
	3-3.6 Primary Heat Exchanger	3-14	
	3-3.7 Secondary Heat Exchanger	3-16	
	3-4 System Operation	3-18	
	3-5 System Functional Checkout	3-20	
	3-6 System Start-Up	3-25	
	3-7 System Shut Down	3-26	
	3-8 Additional Microprocessor Functions	3-27	
	3-8.1 -980 thru -983 Routines (Control Constants)	3-28	
	3-8.2 -984/-985 Routines (Air Limits)	3-29	
	3-8.3 -986 Routine (Soak Times)	3-30	
	3-8.4 -987 Routine (Flow Mode)	3-31	
4	THEORY OF OPERATION	4-1	A
	4-1 ThermoStream Theory	4-1	
	4-2 System Functional Description	4-2	
	4-3 Subassembly Functions	4-5	
	4-3.1 Microprocessor Controller	4-5	
	4-3.1.1 Analog Section	4-6	
	4-3.1.2 Digital Section	4-6	
	4-3.2 Power Controller	4-8	
	4-3.3 Primary Heat Exchanger	4-9	
	4-3.4 Secondary Heat Exchanger	4-10	

Section		Page	Revision
5	MAINTENANCE	5-1	A
	5-1 Maintenance Introduction	5-1	
	5-2 General Maintenance	5-1	
	5-3 Calibration Introduction	5-2	
	5-3.1 Digital Thermometer Calibration	5-3	
	5-3.1.1 Equipment Required	5-3	
	5-3.1.2 Calibration Procedure (AN 6520-8A Digi Cal II)	5-3	
	5-3.1.3 Calibration Procedure (Millivolt Reference Standard)	5-5	
	5-3.1.4 Digital Thermometer Specifications	5-7	
	5-3.2 Analog Input Section Calibration	5-8	
	5-3.2.1 Equipment Required	5-8	
	5-3.2.2 Calibration Procedure	5-8	
	5-3.3 Flow Circuit Calibration	5-11	
	5-3.3.1 Equipment Required	5-11	
	5-3.3.2 Calibration Procedure.(Dwyer Gauge)	5-11	
	5-3.3.3 Calibration Procedure.(Sierra Meter)	5-13	
	5-3.4 DUT Calibration	5-14	
	5-3.4.1 Equipment Required	5-15	
	5-3.4.2 Calibration Set-Up	5-15	
	5-3.4.3 DUT Calibration Procedure	5-16	
6	SERVICE INFORMATION	6-1	A
	6-1 Service Information	6-1	
	6-1.1 Warranty	6-1	
	6-2 Troubleshooting	6-2	
	6-2.1 Failure Conditions At Start-Up	6-5	
	6-3 Microprocessor Controller Check-Out Procedures	6-6	
	6-3.1 -990 Routine (Calibration Mode)	6-6	
	6-3.2 -991 Routine (RAM Test)	6-7	
	6-3.3 -992 Routine (Temperature Set Switch Test)	6-8	
	6-3.3.1 Segment Selected	6-8	
	6-3.3.2 BCD Display	6-8	
	6-3.4 -993 Routine (A/D Check)	6-10	
	6-3.5 -994 Routine (Line Frequency Measurement)	6-11	
	6-3.6 -995 Routine (Front Panel Indicator Test)	6-12	
	6-3.7 -996 Routine (N/A)	6-12	
	6-3.8 -997 And -998 Routines	6-12	
	6-3.9 -997 Routine (IEEE-488 Address Switch Test)	6-13	
	6-3.10 -998 Routine (BCD I/O)	6-14	
	6-3.11 -999 Routine	6-14	
	6-4 Refrigeration Servicing	6-15	
	6-4.1 Equipment Required	6-16	
	6-4.2 Refrigeration Table	6-17	
	6-4.3 Dehydration and Charging Procedure	6-18	
	6-5 Heater Assembly Replacement	6-20	
	6-6 Spare Parts List	6-21	
7	SCHEMATIC/WIRING DIAGRAM LISTING	7-1	A
	7-1 Schematic/Wiring Diagram Listing	7-1	

Section		Page	Revision
8	APPENDICES	8-1	A
8-1	Appendix Introduction	8-1	
	Appendix A WARRANTY	A-1	A
	Appendix B OPTIONS/ACCESSORIES	B-1	A
	Appendix B-1 TP0412A THERMOSTREAM STAND	B-1.1	A
	B-1.1 Stand Introduction	B-1.1	
	B-1.2 Stand Assembly	B-1.2	
	B-1.3 Stand Features	B-1.4	
	B-1.4.1 Stand Options	B-1.8	
	B-1.4 Stand Installation	B-1.9	
	B-1.5 Stand Operation	B-1.11	
	B-1.5.1 Original Stand Controls	B-1.12	
	B-1.5.2 Interim Stand Controls	B-1.13	
	B-1.5.3 '85 Stand Controls	B-1.14	
	B-1.6 Options	B-1.15	
	B-1.7 Troubleshooting	B-1.15	
	Appendix B-2 Air/Gas Dryer Assembly	B-2.1	A
	B-2.1 Dryer Assembly	B-2.1	
	B-2.2 Dryer Features	B-2.2	
	B-2.3 Dryer Manual	B-2.3	
	B-2.3.1 General	B-2.4	
	B-2.3.2 Specifications	B-2.4	
	B-2.3.4 Mounting	B-2.5	
	B-2.3.5 Connections,Elec	B-2.5	
	B-2.3.6 Connections,Hose	B-2.5	
	B-2.3.7 Adjustments	B-2.5	
	B-2.3.8 Operation	B-2.5	
	B-2.3.9 Maintenance	B-2.6	
	B-2.3.10 Parts List	B-2.7	
	B-2.3.11 Access. Packaged Loose	B-2.7	
	B-2.4 Air Filter Assembly	B-2.9	
	Appendix B-3 Thermal Cap Options	B-3.1	A
	B-3.1 Introduction	B-3.1	
	B-3.2 Thermal Caps	B-3.1	
	B-3.3 Flexible Extender	B-3.3	
	B-3.4 Printed Circuit Board Enclosures	B-3.4	
	B-3.4.1 MiniZone Enclosure	B-3.4	
	B-3.4.2 MiniDome Enclosure	B-3.4	
	B-3.4.3 PCB Enclosure Features	B-3.7	
	B-3.4.4 Window Film Replacement	B-3.7	
	B-3.5 MiniHandler Thermal Accessory	B-3.9	
	Appendix B-4 Shroud and Insulation Kits	B-4.1	A
	B-4.1 Shrouds	B-4.1	
	B-4.2 Insulation Kits	B-4.3	

Section | Page | Revision

Appendix B-5 Remote Temperature Set Switch Option.....B-5.1.....A
B-5.1 Introduction.....B-5.1
B-5.2 Installation.....B-5.2

Appendix B-6 Buck Boost Transformer Option.....B-6.1.....A

Appendix B-7 5 Temperature Set Switch Option.....B-7.1.....A
B-7.1 Introduction.....B-7.1
B-7.2 Installation.....B-7.2
B-7.3 Internal Diagnostics.....B-7.2

Appendix B-8 IEEE-488 Option.....B-8.1.....A
B-8.1 Introduction.....B-8.1
B-8.2 Bus Interfacing.....B-8.2
B-8.3 Operation Under IEEE-488.....B-8.3
B-8.3.1 Address Switch Setting....B-8.3
B-8.3.2 Start-Up Under IEEE.....B-8.4
B-8.3.3 Command Messages.....B-8.5
B-8.3.3.1 Setting Temperature, Stand & Flow Control.....B-8.5
B-8.3.3.2 Example for Requesting Info.....B-8.7
B-8.3.3.3 Service Requests...B-8.7
B-8.3.3.4 HP-85 Examples.....B-8.7
B-8.4 Specification.....B-8.13
B-8.5 Internal Diagnostics (-997 Routine).....B-8.18

Appendix B-9 BCD Option.....B-9.1.....A
B-9.1 Introduction.....B-9.1
B-9.2 Internal Diagnostics.....B-9.3

Appendix B-10 DUT Control Option.....B-10.1.....A
B-10.1 Introduction.....B-10.1
B-10.2 Temperature Sensors.....B-10.5
B-10.3 Installation.....B-10.7
B-10.4 Fixturing.....B-10.8
B-10.4.1 "Spring" Type.....B-10.12
B-10.4.2 "Disc" Type.....B-10.12
B-10.5 DUT Console Features.....B-10.13
B-10.6 DUT Calibration.....B-10.14
B-10.7 Operation.....B-10.14

Section		Page	Revision
Appendix C	APPLICATION NOTES	C-1	A
Appendix C-1	ThermoStream® Principles	C-1.1	A
C-1.1	Introduction	C-1.1	
C-1.2	Temperature Control	C-1.1	
C-1.3	Heat Transfer	C-1.1	
C-1.4	High & Low Temperature Considerations	C-1.3	
C-1.5	Dew Point Considerations	C-1.4	
Appendix C-2	Interfacing Techniques	C-2.1	A
C-2.1	Utilization of Silicon Foam Insulation Kit	C-2.1	
C-2.2	Additional Interfacing Techniques	C-2.2	
Appendix C-3	Minimizing Test Specimen Temperature Stabilization Times	C-3.1	A
C-3.1	Minimizing The Test Zone Volume	C-3.1	
C-3.2	Use of Two Temperature Test Sequences	C-3.2	
C-3.3	Fixture Presoak	C-3.3	
C-3.4	Presoak	C-3.4	
Appendix C-4	Test Specimen Temperature Measurement	C-4.1	A
Appendix C-5	Thermocouples	C-5.1	A
Appendix C-6	ThermoStream® Mini-Enclosure Application Note	C-6.1	A
C-6.1	General	C-6.1	
C-6.2	Technical Considerations	C-6.1	
C-6.3	Chamber Construction	C-6.2	
C-6.4	Typical Enclosure Test Results	C-6.4	
Appendix D	REPLY CARDS AND HANG TAGS	D-1	A
D-1	Introduction	D-1	
D-2	User/Owner Registration Card	D-1	
D-3	Hang Tags	D-3	
Appendix E	SERVICE & SALES REPRESENTATIVES	E-1	A
E-1	Introduction	E-1	
E-2	Service Representatives	E-2	
E-2.1	Domestic Service Centers	E-2	
E-2.2	Export Service Centers	E-3	
E-3	Sales Representatives	E-3	
E-3.1	Domestic Sales Reps	E-3	
E-3.2	Export Sales Reps	E-5	

LIST OF ILLUSTRATIONS

Section	Figure		Page
1	1-1	Typical TP0412A ThermoStream System.....	1-2
2	2-1	Refrigeration Balance Pressures.....	2-2
3	3-1	Microprocessor Controller Front Panel.....	3-4
3	3-2	Microprocessor Controller Back Panel.....	3-7
3	3-3	Microprocessor Cont. Front Panel Option.....	3-8
3	3-4	Microprocessor Cont. Back Panel Options.....	3-9
3	3-5	Power Controller Front Panel.....	3-10
3	3-6	Power Controller Back Panel.....	3-12
3	3-7	Primary Heat Exchanger (WAND).....	3-14
3	3-8	Secondary Heat Exchanger.....	3-16
4	4-1	Airstream/DUT Block Diagram.....	4-2
4	4-2	System Block Diagram.....	4-3
4	4-3	Analog Circuit Functional Diagram.....	4-6
4	4-4	Digital Circuit Functional Diagram.....	4-7
4	4-5	Pneumatic Diagram.....	4-9
4	4-6	Primary Heat Exchanger.....	4-10
4	4-7	Cascade Refrigeration System.....	4-12
5	5-1	Calibration Adjustment Poteniometers For DTM.	5-4
5	5-2	Setup for Calibration of Digital Thermometer.	5-5
5	5-3	Flow Adjustment Poteniometer Location.....	5-12
B-1	B-1.1	Floor Stand.....	B-1.1
B-1	B-1.2	Stand Features and Controls.....	B-1.4
B-1	B-1.3	Original Stand Controls.....	B-1.12
B-1	B-1.4	Interim Stand Controls.....	B-1.13
B-1	B-1.5	'85 Stand Controls.....	B-1.14
B-2	B-2.1	Air Dryer.....	B-2.1
B-2	B-2.2	Internal View of Dryer Assembly.....	B-2.2
B-3	B-3.1	Flexible Extender with Wall Thermal Cap.....	B-3.3
B-3	B-3.2	MiniHandler Thermal Accessory Configuration..	B-3.10
B-3	B-3.3	MinHandler Interfaced to System/DUT Option...	B-3.10
B-5	B-5.1	Remote Temperature Set Switch.....	B-5.1
B-7	B-7.1	5 Temperature Set Switch Module.....	B-7.1
B-8	B-8.1	TP0412A IEEE-488 I/O.....	B-8.2
B-10	B-10.1	DUT Option Console.....	B-10.1
B-10		Curve "Spring" Sensor vs "Disc" Sensor.....	B-10.6
B-10	B-10.2	DUT Console & Microprocessor Cont. Inter.....	B-10.7
B-10	B-10.3	DUT Test Fixture & Interface.....	B-10.9
B-10		Test Socket Modification "Spring Type".....	Drawing B4322
B-10		Test Socket Modification "Disc Type".....	Drawing B4714
C-1	C-1.1	ThermoStream® Air Temp. & DUT Temp vs Time...	C-1.2
C-2	C-2.1	Typical Foamed Board Assembly.....	C-2.2
C-2		Test Temperatures Below Ambient.....	C-2.4

LIST OF TABLES

Section	Table		Page
6	6-1	System Troubleshooting Procedures	6-2
6	6-2	Refrigeration Data	6-17
B-9	B-9.1	BCD Option Interface Connector Pin Assignments	B-9.2
C-3	C-3.1	Results of Tests Using a Reduced Test Zone Volume	C-3.2
C-3	C-3.2	Results of 2 Temperature Test Sequences	C-3.3
C-3	C-3.3	Results of Tests in which Test Fixturing Remained AT Test Temperature	C-3.3

GLOSSARY OF TERMS

Primary Heat Exchanger - WAND, Foamed Heater Ass'y or simply heater

Secondary Heat Exchanger - Cascade Refrigeration System

Suction Line Assembly - Umbilical between WAND and Cascade - distributed evaporator

LIST OF ABBREVIATIONS

DUT - Device Under Test

CFM - Cubic Feet Per Minute

SCFM - Standard Cubic Feet per Minute

SCFH - Standard Cubic Feet per Hour

PSIG - Pounds per Square Inch Gauge

BCD - Binary Coded Decimal

CW - Clockwise

CCW - Counter Clockwise

TEV - Thermal Expansion Valve

PCB - Printed Circuit Board

EXT - External

T/C Thermocouple

SECTION 1
INTRODUCTION AND SPECIFICATIONS

1-1 MANUAL INTRODUCTION

The information provided in this manual is intended to assist in the installation and normal operation of the TP0412A ThermoStream® System. It is essential to follow the precautions and procedures presented here for maximum system performance and reliability.

Throughout this manual, the terms "gas" and "air" will be interchanged when the discussion pertains to the flow of the stream medium. The term "gas" in this instance should not be confused with the refrigerant used in the refrigeration system, but should be understood to be either dry nitrogen or dry air.

A four part reply card is provided in Appendix D. Please take the time now to complete and return one for our records. Thank you in advance for your cooperation in this matter.

1-2 SYSTEM DESCRIPTION

The TP0412A ThermoStream® System is a high capacity, microprocessor-based, modular, thermal inducing system designed to provide a controlled thermal environment for testing electronic components, modules, and small circuit boards at temperatures between -70°C and +200°C.

++++++++++
+ WARNING +
++++++++++

The test fixture may require special considerations to accommodate the temperature range of this system.

This system is comprised of four basic components, See Figure 1-1. A microprocessor-based temperature controller (1) which may be positioned away from the other components, allows the desired test temperature to be input and gives a digital readout of the gas stream temperature. A secondary heat exchanger (2), a cascade refrigeration system, to cool the gas stream on its way to the primary heat exchanger. A power controller unit (3) distributes all ac and dc power to the other assemblies and accessories as well as provides gas flow indication and control. The primary heat exchanger (4) houses the heater and directs the stream of temperature controlled dry gas at the device under test (DUT). It also supports the optional ThermoCaps which interfaces to the tester and the enclosures used to encapsulate the DUT.

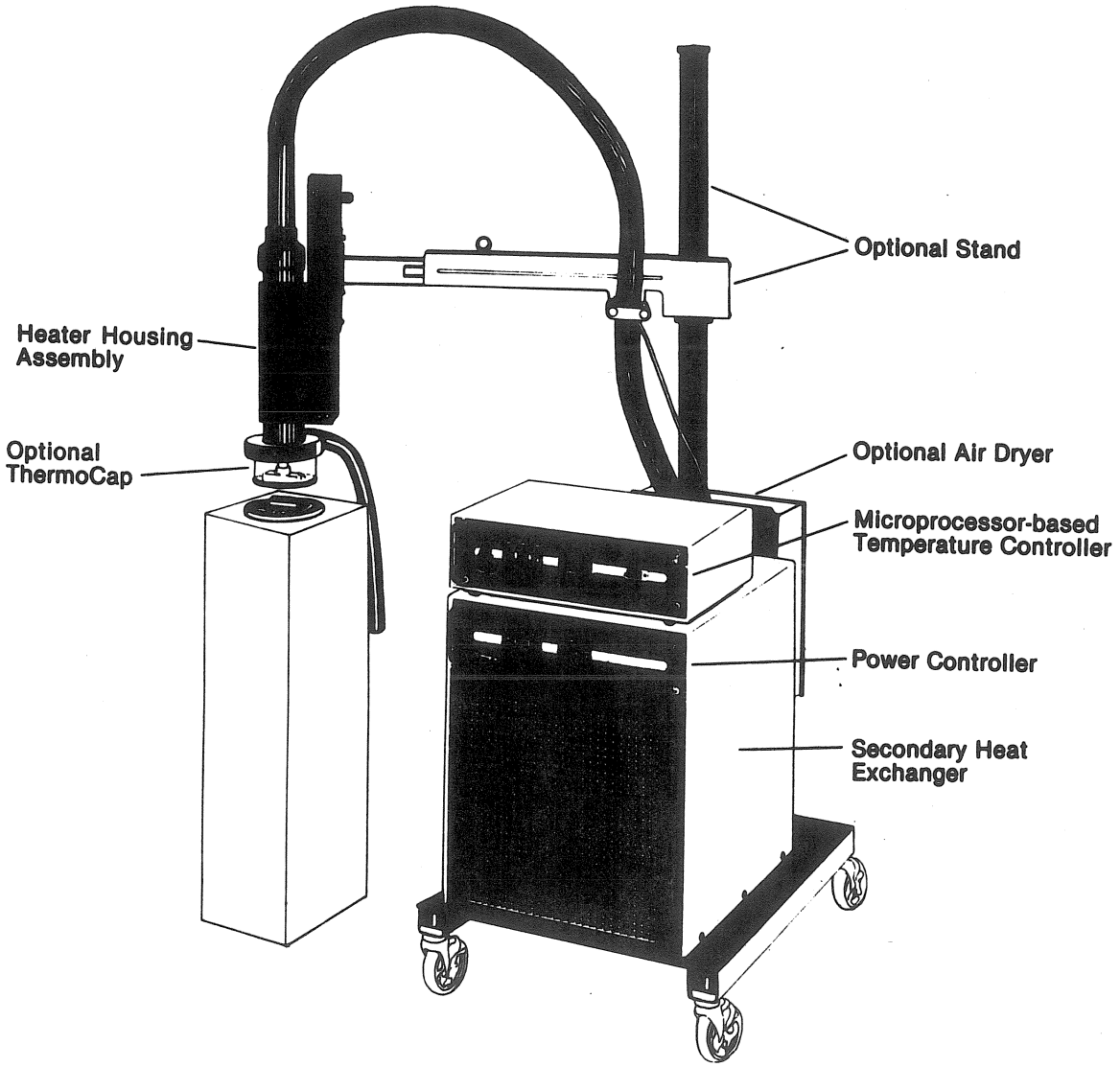

Figure 1-1. Typical TP0412A ThermoStream® System

The system is self-contained; however, the user must provide necessary electrical power and a dry gas source. The gas source may be dry nitrogen (N_2). Compressed air is acceptable, however, if conditioned to -60°C dew point and prefiltered to remove any contaminates which may cause damage to either the DUT, tester, or system. If no dry gas source is available, the optional air dryer (See Appendix B-2) must be installed between the gas source and the system.

1-3 STANDARD SYSTEM FEATURES

The TP0412A ThermoStream System is equipped to provide the following:

- Wide temperature range: -70°C to +205°C at 5 liters/sec (10SCFM)
- Less than 90 seconds transition time, dry gas stream temperature only, between temperature extremes
- Unique thermal coupling to the DUT provides fastest transition times and highest accuracy for a given flow rate
- Microprocessor-based controller with internal diagnostic function and dedicated calibration mode
- "Overheat", "Out of Range" and "At Temperature" indications
- Built-in safety features such as resettable circuit breaker and independent heater case temperature sensor
- Dual air/gas flow system for both rapid temperature change and gas conservation while holding the DUT at test temperature
- Resettable overheat protection
- Adjustable (2 to 10SCFM) air flow rate with BAR-LED flow readouts in both SCFM and liters/second
- Design permits flexibility in the location of various components to best suit the user's space, operation and environmental conditions
- Self-contained refrigeration system provides all necessary cooling for dry gas medium, eliminating the need for liquid nitrogen or CO_2 to assist in cooling.

- Non-breakable, easily oriented shrouds (enclosures) available for most component package configurations as well as for small circuit boards.

- Double wall Thermal Cap enclosing the test site surfaces prevents condensation or frost under normal environmental and testing conditions.

- With the optional stand, the primary heat exchanger may be rotated ±90° from a center position allowing 180° freedom of air flow direction. With minimal effort, this center position may be re-adjusted, enabling a different quadrant to be covered.

Refer to Section 1-5 for a listing of the available standard options and accessories.

1-4 SYSTEM SPECIFICATIONS

Temperature Range:
-70°/+205°C (1 to 5 liters/sec. or 2 to 10SCFM).
[OVERHEAT pre-set at +210°C]

Temperature Accuracy:
±2°C or ±2%, whichever is greater, within the system operating range (limits)

Temperature Repeatability of Component:
±0.5°C (provided same set temperature)

Temperature Stability of Component:
±0.5°C typical (provided same set temperature)

Controller Type:
PID (Proportional, Integral, Derivative) zero-cross AC

Input Gas Requirements:
+18 to +32°C (64 - 90°F) dry nitrogen or dry air
-57°C (-70°F) dew point supplied at 65psig.

Output Gas Flow:
1-5 liters/sec (2-10SCFM)

Electrical Source: (For systems manufactured prior to System S/N 8412882: 220vac, 30 amp service with receptacle for Hubbell twist lock connector (Hubbell P/N 2620).

For systems manufactured after System S/N 8412882: 220vac ±20v, 20 amps at 50/60 hz service with receptacle for Hubbell twist lock connector (Hubbell P/N 2321).

Dimensions:

	Width		Height		Depth		Weight	
	cm	(in)	cm	(in)	cm	(in)	kg	(lbs)
Controller	48.9	(19.25)*	15.2	(6.0) **	34.3	(13.5)	7.7	(17)
Htr. Ass'y.	8.9	(3.5)*	62.9	(24.75)**	--		--	
Refrig.	48.9	(19.25)*	58.4	(23.0)	59.7	(23.5)	86.2	(190)
Thermal Cap	10.2	(4.0)*	9.5	(3.75)	--		--	

*
**Diameter
Length

1-5 SYSTEM OPTIONS AND ACCESSORIES

The standard Model TP0412A ThermoStream® System is designed to readily accept a variety of options and accessories, allowing the user to configure the system for a specific requirement. Separate appendices have been devoted to each.

Though these features may be added at any time to the system after manufacture, some options or accessories may require returning the system to the factory for modification.

Microproccessor Controller Options:

Item Description	TEMPTRONIC PART NUMBER	Refer To Appendix
Single Temperature Set Module	SA 35900	B-7
Five Temperature Set Module	SA 32160	B-7
IEEE Interface	SA 32661	B-8
BCD Interface	SA 34560	B-9

System Accessories:

Floor Stand	ZHS 42750	B-1
Floor Stand Foot Switch Assembly	ZAK 39780	B-1
Air Dryer	ZAD 40520	B-2
*Air Filter Assembly	ZAD 40510	B-2
*Single Wall ThermoCap	ZAK 42550	B-3
*Double Wall ThermoCap	ZAK 42540	B-3
Double Wall ThermoCap	ZAK 42480	B-3
Shroud Kits	See Appendix	B-4
Remote Control Assembly	SA 36100	B-5
Buck Boost Transformer	See Appendix	B-6
DUT Control	ZRM 42180	B-10

10 ft. Interconnecting Power Cable	SA 39904
25 ft. Interconnecting Power Cable	SA 39906
10 ft. Interconnecting Thermocouple Cable	SA 38962
25 ft. Interconnecting Thermocouple Cable	SA 38963
10 ft. I/O Interconnecting Cable	SA 36212
25 ft. I/O Interconnecting Cable	SA 36213

* Appropriate Non Conductive Shroud Kits supplied with ThermoCaps. Conductive Shroud Kits are available at additional charge.

SECTION 2
UNPACKING AND INSTALLATION

2-1 UNPACKING INFORMATION

The Model TP0412A ThermoStream System is shipped in one container unless the optional floor stand is purchased, when the vertical post is shipped separately. All interconnecting cables and any accessories are packed in the same container as the system.

When received, the package should be examined for any signs of mishandling or damage during shipment.

NOTE

If there are any obvious signs of damage when the package is received, contact the carrier immediately and do not proceed with the installation. Since the shipment is made FOB factory, you should consult your administration concerning claims for shipping damage.

When removing the system from the pallet, DO NOT PULL OR STRESS THE SUCTION LINE ASSEMBLY. Save all packaging material in the event the system is reshipped in the future. After the system has been unpacked, the following visual inspections should be made:

1. Verify all items purchased are accounted for.

2. Verify indicator lights and switches are in place and intact.

3. Check all cable connector pins for proper alignment.

4. Verify all chassis/cabinet mounting screws are secure.

5. Verify fuse and fuse holder in rear of microprocessor controller are in place and intact. Check integrity and switch position of system circuit breaker on power controller back panel.

6. Read the refrigeration pressure gauges through the secondary heat exchanger rear screen (see Figure 2-1). This is an important reading for future reference in case there are refrigeration problems. Should any gauge read "0" contact the factory.

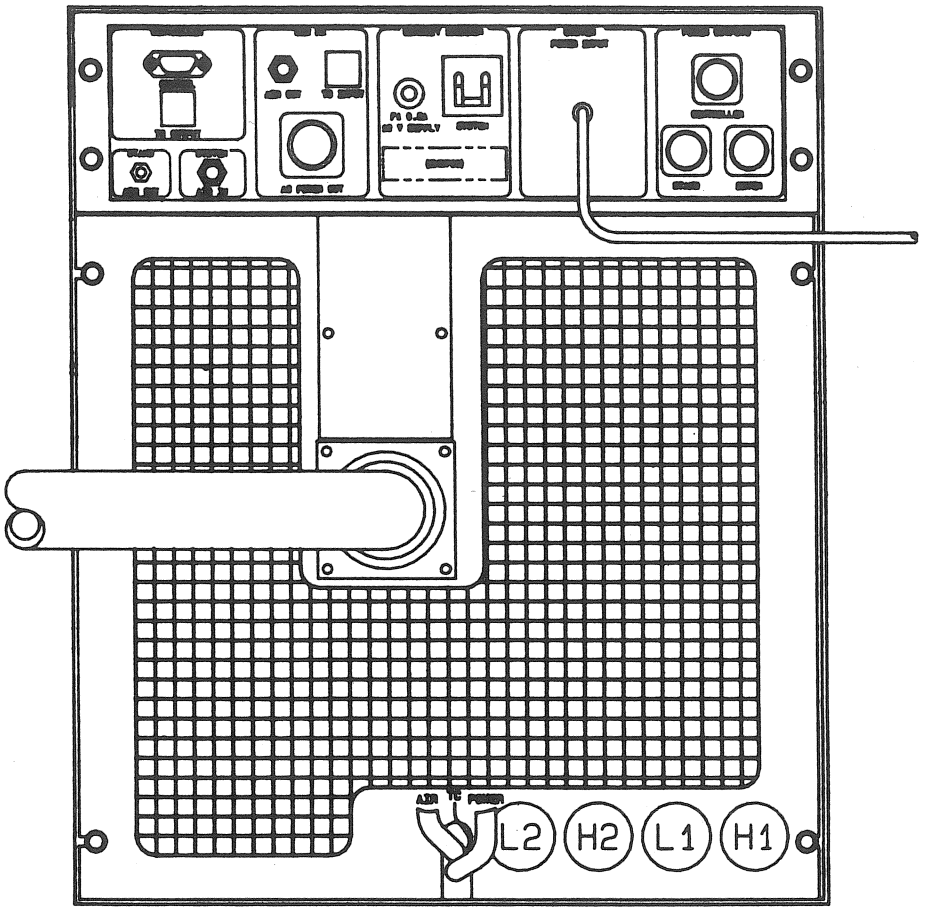

Figure 2-1. Refrigeration Balance Pressures.

Record the gauge readings here.
Left gauges (2nd stage pressures): H2 _____ L2_____
Right gauges (1st stage pressures): H1 _____ L1 _____
Room temperature at time of reading: _____°F

2-2 INSTALLATION PLANNING

In planning the installation of the Model TP0412A ThermoStream® System, the following should be considered:

1. Position the system to allow convenient viewing and easy access to both the front and rear panel switches and connections. All operational controls, however, are front panel mounted.

2. Place the system so the primary heat exchanger can easily be positioned at the test site without stretching, straining, or forming sharp bends in the suction line assembly.

3. A minimum of one (1) foot of free air space should be made available around the front and rear of the secondary heat exchanger. The ambient at the front should never exceed 30°C (86°F) because the compressors can overheat and their thermal cutout can be actuated.

4. Provide convenient access to the power source to eliminate the use of long extension cords. The supplied power cord is ten (10) feet long, except for those supplied to European countries. (see Section 2-3).

   Also, locate the system in reasonable proximity to the dry gas source. The gas supply hose provided is ten (10) feet long. Longer hoses can be used if required but care should be exercised to avoid using hosing or joints that may allow moisture to penetrate the system or reduce flow. For very long distances, a hose of larger diameter is recommended to minimize gas/air flow resistance.

5. System operation and performance will be adversely affected if the laws of heat transfer are ignored. Insulating materials are supplied and should be used. See Appendix C-2 for examples of recommended interfacing techniques which will protect the tester and aid in system performance. All materials used at the test-site, such as the socket, should be operable at the temperatures which the system can supply.

2-3 INPUT POWER

The standard Model TP0412A ThermoStream System manufactured prior to System S/N 8412882 requires a single 220 vac, 30 amp., 50/60 hz service. The receptacle should accept a Hubbell twist lock connector (Hubbell P/N 2620). Systems manufactured after System S/N 8412882 require a single 220 vac, 20 amp 50/60 hz. In both cases, the power source should be noise-free to prevent interference with the microprocessor operation.

****
* CAUTION *
****

Line voltage should be between 200 and 240 volts ac, ideally 220 volts. If subjected to levels above or below these limits, make provisions to stabilize it as close to 220 volts as possible but definitely between 200 and 240 volts by means of buck/boost transformers or constant voltage transformers.

2-4 REPACKAGING

If the system is to be shipped to another location, repackage the system in the original shipping carton and packaging material per drawing D4797 included in this section. In the event the original packaging material is not available or reuseable new materials may be obtained from Temptronic's Service Department.

When utilizing your own packaging materials observe the technique and concept presented on drawing D4797 and check with the freight carrier chosen for any weight or size restrictions.

Prior approval is required before shipping the system to a Temptronic Sales/Service Office, or to the factory. It is recommended that a tag be attached to the system stating the owner's name, address, telephone number, system model and serial numbers and reason for return.

SECTION 3
SYSTEM OPERATION

3-1 ASSEMBLY INSTRUCTIONS

The Model TP0412A ThermoStream System is complete as shipped with most or all of the interconnections made. Depending on the particular system configuration, however, some assembly will be necessary. (see pages 3-2 and 3-3, drawings D4053 and D4247). Refer to the appropriate appendices for assembly, interconnection, and operation instructions of any supplied options or accessories.

3-2 INTERCONNECTIONS

Interconnecting of the Model TP0412A ThermoStream System is a routine procedure wherein the supplied cables and hoses are merely attached to their mating connectors.

The electrical connections may be made in any sequence however, it is recommended that the system main power connection be made last. All power connections are keyed and the appropriate mating connectors should be easily inserted. The thermocouple receptacles are polarized and if forced may be incorrectly mated.

The gas/air connections should be made at this time prior to turning the system on. The necessary pressure and flow regulation should be adjusted with the system operating (see Section 3-5).

3-3 OPERATING FEATURES

The following describes the switches, controls, and indicators associated with the operation of the TP0412A ThermoStream System.

REVISIONS				
ZONE	LTR	DESCRIPTION	DATE	APPROVED
	T	ECN 4053T	8-20-86	[illegible]
	U	ECN 4053U [illegible]	3-26-87	[illegible]

REV	ECN NO	DATE
H	2607	
J	2624	
K	2636	
L	2742	
M	2812	
N	2821	
P	2887	12/85
Q	2992	3/86
R	3058	5/86
S	3032	6/86
T	4053-T	

CABLE CONNECTIONS		
LTR	TEMP.STOCK NO.& DESCRIPTION	ITEM NO.
A	SA3621-1, EXT.CONTROL	4
B	SA3896-1, T.C.INTERCONECT	5
C	SA3990-2, POWER CABLE	6
D	POWER CORD	REF
E	OPTIONAL STAND CONNECTOR	REF
F	OPTIONAL DRYER CONNECTOR	REF

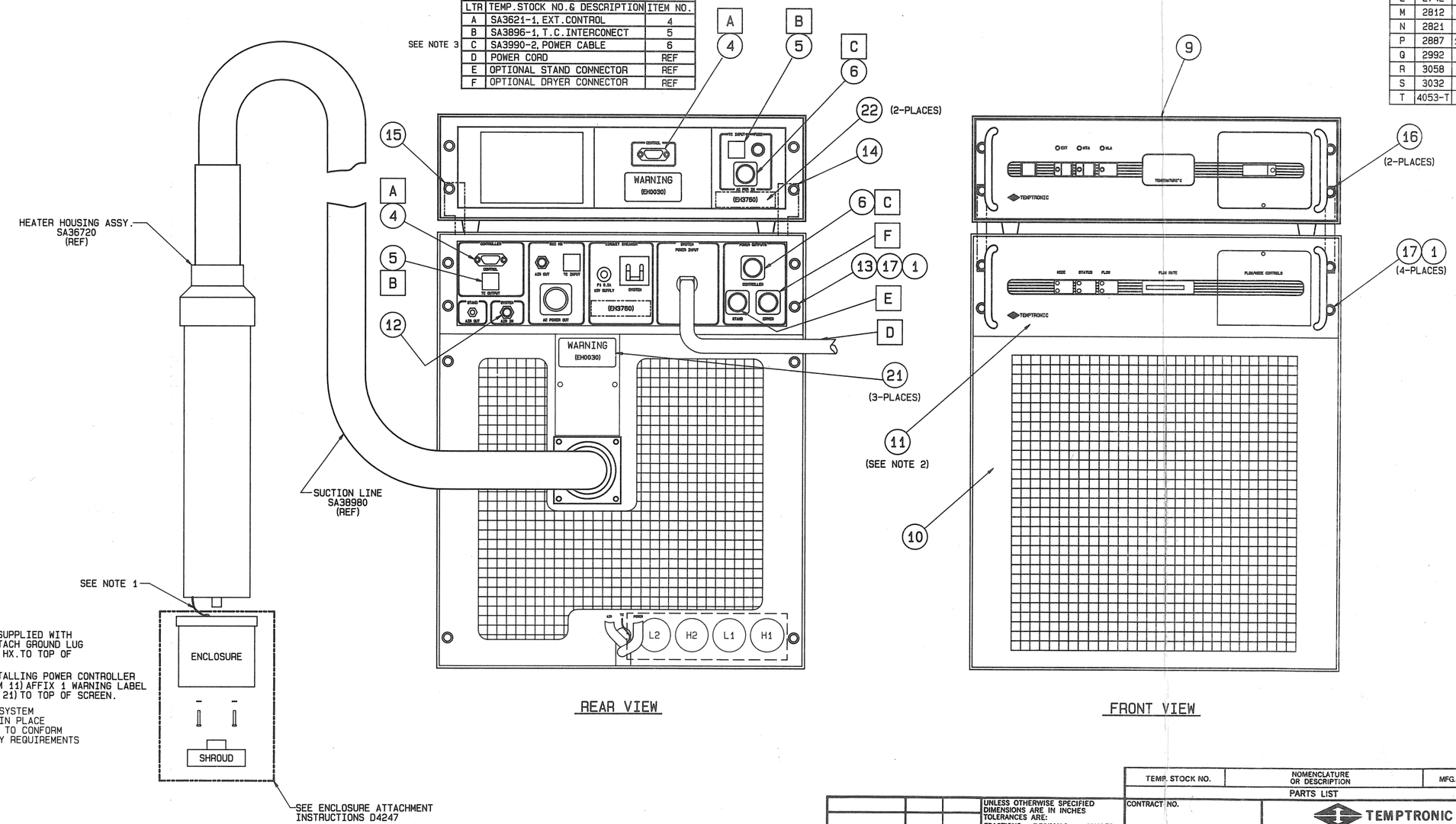

NOTE:

1. USING SCREW SUPPLIED WITH ENCLOSURE ATTACH GROUND LUG FROM PRIMARY HX.TO TOP OF ENCLOSURE.
2. PRIOR TO INSTALLING POWER CONTROLLER (TPC3907-ITEM 11) AFFIX 1 WARNING LABEL (EH0030-ITEM 21) TO TOP OF SCREEN.
3. TP0412A IBM SYSTEM HAS SA43962 IN PLACE OF SA39902 , TO CONFORM TO IBM SAFETY REQUIREMENTS

TEMP. STOCK NO.	NOMENCLATURE OR DESCRIPTION	MFG. PART NO.	ITEM

PARTS LIST

NEXT ASSY	USED ON	SYSTEM
SECTION 3	LMS1360	TP0412A

APPLICATION

UNLESS OTHERWISE SPECIFIED DIMENSIONS ARE IN INCHES TOLERANCES ARE: FRACTIONS ± 1/64 DECIMALS .XX ± .01 .XXX ± .005 ANGLES ± 30'

MATERIAL

FINISH

DO NOT SCALE DRAWING

CONTRACT NO.

APPROVALS	DATE
DRAWN J. WOODMAN	8-20-86
CHECKED	
ENG	

UNLESS OTHERWISE SPECIFIED RESISTANCE VALUES ARE IN OHMS ± % WATT CAPACITANCE VALUES ARE IN ± % VOLTS

TEMPTRONIC CORP.

SYSTEM TOP ASSY.

SIZE	CODE IDENT NO.	DRAWING NO.	REV
D		4053	U

SCALE NA SHEET 1 OF 1

FOTOBEAM/BROOKSIDE 0225-D

REVISIONS				
ZONE	LTR	DESCRIPTION	DATE	APPROVED
	B	ECN 2607	1-10-85	[illegible]

NOTES:

1. MAKE SURE HEATER HOUSING IS SECURE IN STAND HEAD, SYSTEM IS UNPLUGGED AND AIR DISCONNECTED.
2. TILT STAND HEAD LEFT OR RIGHT 90° AND SECURE IN THIS POSITION
3. ATTACH GROUND LEAD TO TOP OF SHAFT WITH SCREW SUPPLIED WITH ENCLOSURE.
4. POSITION ENCLOSURE ON END OF HEATER HOUSING *TAKE CARE THAT GROUND WIRE MOVES UP INTO HEATER HOUSING AND DOES NOT GET PINCHED, RECOMMEND ENCLOSURE BE POSITIONED SO THAT VENT HOLE OR VENT LINE IS TO EITHER SIDE OR TO REAR AWAY FROM OPERATOR.
5. ALIGN 2-THRU HOLES IN ENCLOSURE WITH 2-HEATER HOUSING HOLES SELECTED.
6. INSERT #6-32 SCREWS WITH WASHERS SUPPLIED, THRU ENCLOSURE AND INTO MOUNTING HOLES IN HEATER HOUSING AND TIGHTEN.
7. PUSH DESIRED SILICONE RUBBER SHROUD OVER AIR STREAM NOZZLE AS SHOWN.
8. FOR DOUBLE WALL ENCLOSURES ONLY ZAK4254-4" ZAK4248-6".
   a. REMOVE SEAL PLUG FROM STAND FITTING.
   b. INSTALL 1/16 BARB FITTING SUPPLIED, INTO STAND FITTING.
   c. ATTACH DOUBLE WALL ENCLOSURE AIR LINE SUPPLIED, BETWEEN STAND FITTING AND ENCLOSURE FITTING.
   d. INSERT EXHAUST TUBE ASSY. INTO ENCLOSURE AS SHOWN, MAKE SURE VENT LINE IS ALL THE WAY IN AND FULLY SEATED.

* AIR LEAKAGE CAN OCCUR IF GOOD SEAL NOT MADE.

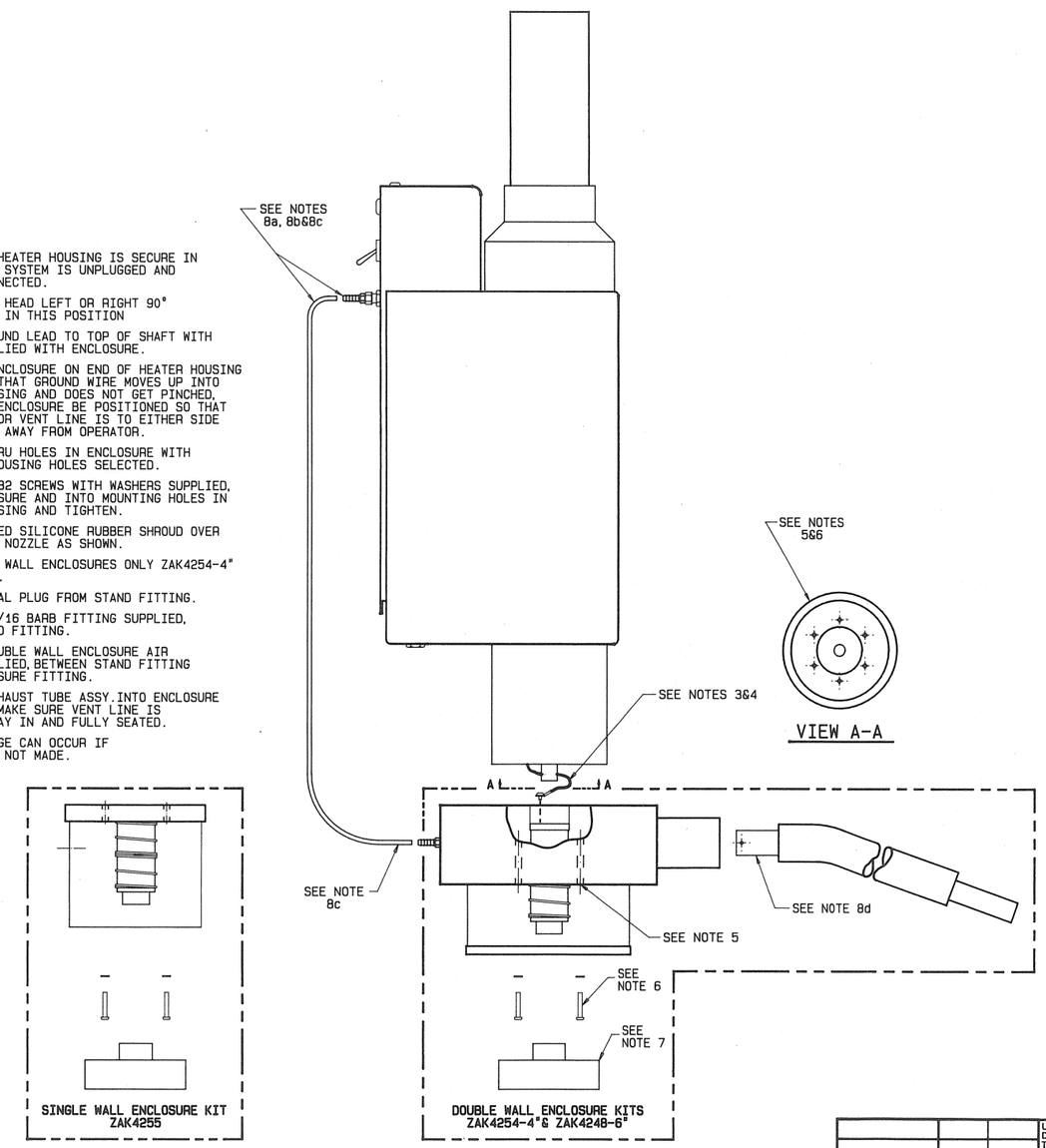

TEMP. STOCK NO.	NOMENCLATURE OR DESCRIPTION	MFG. PART NO.	ITEM
	PARTS LIST		

NEXT ASSY	USED ON	SYSTEM
Section 3	LMS1360	TP0412A
ZAK4255	-//-	TP0412A
ZAK4254	-//-	TP0412A
ZAK4248	-//-	TP0412A

APPLICATION

UNLESS OTHERWISE SPECIFIED DIMENSIONS ARE IN INCHES TOLERANCES ARE:
FRACTIONS ± 1/64 DECIMALS .XX ± .01 .XXX ± .005 ANGLES ± 30'

MATERIAL

FINISH

DO NOT SCALE DRAWING

CONTRACT NO.

APPROVALS	DATE
DRAWN J WOODMAN	8-15-84
CHECKED	
ENG	

UNLESS OTHERWISE SPECIFIED RESISTANCE VALUES ARE IN OHMS ± % WATT CAPACITANCE VALUES ARE IN ± % VOLTS

TEMPTRONIC CORP.

ENCLOSURE ATTACHMENT ASSEMBLY (LMS1140)

SIZE	CODE IDENT NO.	DRAWING NO.	REV
D		4247	B

SCALE 1/2 SHEET 1 OF 1

FOTOBEAM/BROOKSIDE 0228-D

3-3.1 Microprocessor Controller (front panel)

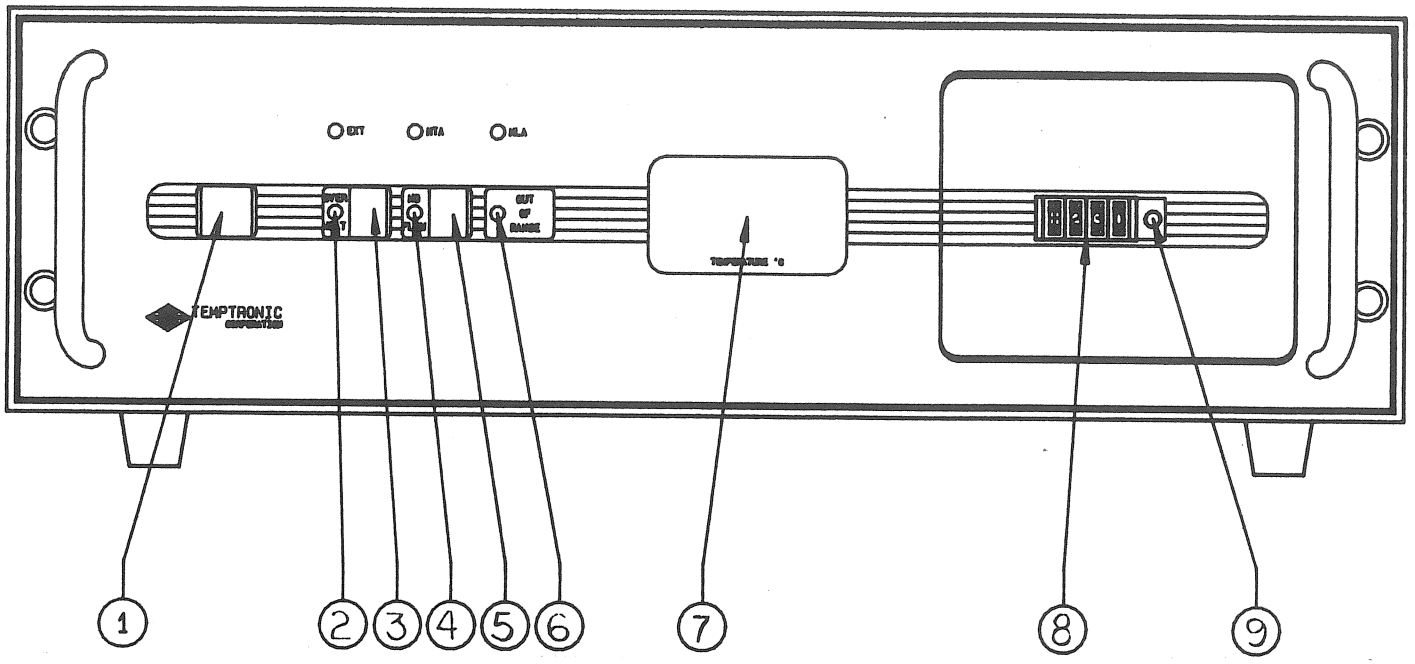

Figure 3-1. Microprocessor Controller Front Panel.

Item	Designation	Function	Explanation
1	POWER switch	Controls and indicates on/off application of ac power to the system. When "on", the switch indicates green.	A pushbutton switch used to power up/down system. When depressed to power up the system, it initiates a timed start-up sequence, the duration of which is dependant of the Mode selected. During this sequence all input and output functions are disabled.
2	OVERHEAT LED-indicator	Provides red warning indication when gas stream temperature exiting the Heater Housing Assembly exceeds the factory-set upper operating limit.	Latched on when applied temperature upper limit is exceeded. Power to the heating function is off when this indicator is on. This indicator is also used in conjunction with other indicators when utilizing the -980 and -990 code series.

Item	Designation	Function	Explanation
3	RESET switch	Returns temperature control to the microprocessor controller and to the front panel mode; also used in conjunction with the FLOW switch to initiate -980 and -990 code series.	Pushbutton type switch which when depressed allows power to be restored to the heating circuit after correction of an overheat condition. This switch is also used to clear all other conditions. Whenever depressed the gas flow will be stopped. When depressed and released while the FLOW switch is depressed will initiate the -980 and -990 codes series.
4	NO FLOW LED-indicator	Provides red warning indication when gas flow is below 1 L/sec (2SCFM) threshold level.	Latched on when gas flow is interrupted or diminished below threshold rate. Power to the heating circuit is off when this indicator is on. Flashing when low flow error is detected.
5	FLOW switch	Allows gas flow to be turned on or off at any time.	Pushbutton type switch when depressed energizes 1 of 2 gas flow control solenoids located in the POWER CONTROLLER. Also is used in conjunction with the OVERHEAT RESET switch to initiate the -980 and -990 code series.
6	OUT OF RANGE LED-indicator	Provides red warning indication when the requested temperature is outside preset limits.	When on, the requested temperature is outside the upper or lower limits. The system will however try to achieve the desired temperature unless interrupted. To clear this condition simply request a temperature within the system limits.

Item	Designation	Function	Explanation
7	TEMPERATURE meter	Digitally displays the gas stream temperature in degrees Celsius.	Provides a 3 digit and polarity read-out of the gas stream temperature with 1°C resolution, and also supplies displayed information to the temperature control circuit.
8	TEMPERATURE SET switch	Allows a polarity and 3 digit temperature setting to be entered using 4 pushbutton switches. Also used to enter -980 & -990 Codes.	Provides both a read-out of the manually set temperature and supplies this information in BCD to the temperature control circuit. A single switch is standard, but a multiple switch option is available for convenient setting of 5 temperatures to enable frequently used temperatures to be readily addressed.
9	AT TEMP LED-indicator (one per set switch)	Indicates if gas stream temperature is in transition or controlling at the set temperature.	Flashes red during temperature transition and latches on when stream temperature is within ±2°C of the set temperature and/or after the preset "soak" time has elasped.

3-3.2 Microprocessor Controller (back panel)

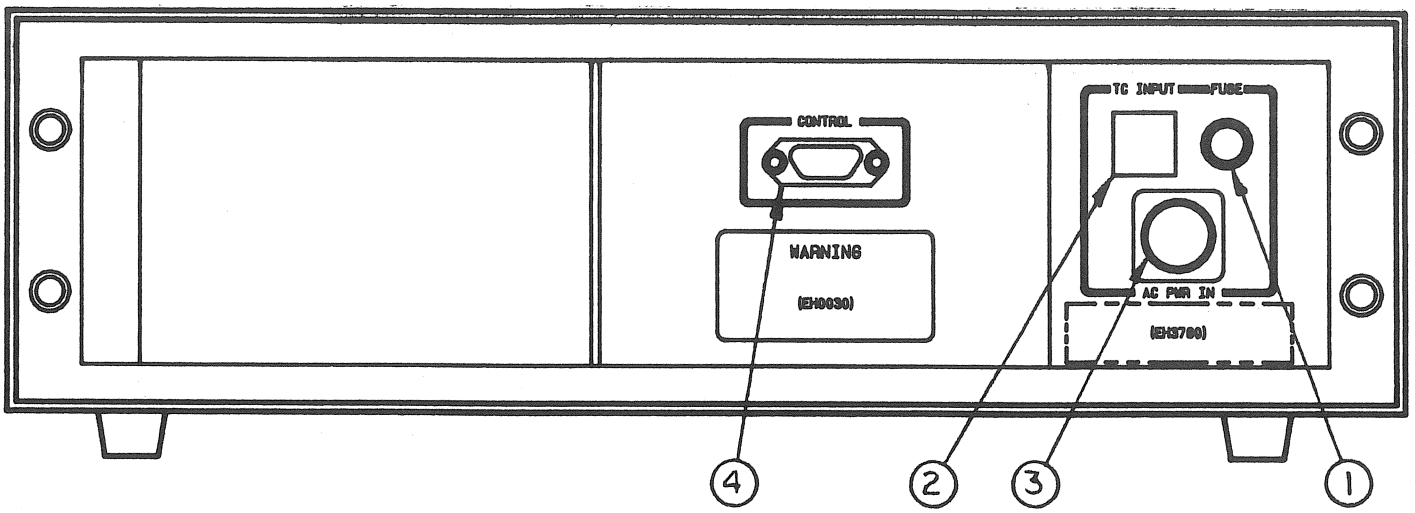

Figure 3-2. Microprocessor Controller Back Panel.

Item	Designation	Function	Explanation
1	FUSE	Protects both the system and operator.	A fast-blow type carefully selected to allow normal system operation.
2	THERMOCOUPLE receptacle	Provides input port for controlling thermocouple.	Allows temperature sensor to input to the TEMPERATURE meter thus ultimately to the temperature control circuit.
3	POWER receptacle	Provides input port for line voltage.	Allows ac power from power controller to connect to the microprocessor controller and its power switch.
4	INTERFACE CABLE receptacle	Links microprocessor controller to the power controller.	Provides interconnections between microprocessor controller and power controller enabling the microprocessor to control the power functions.

3-3.2.1 Microprocessor Controller Options (front panel)

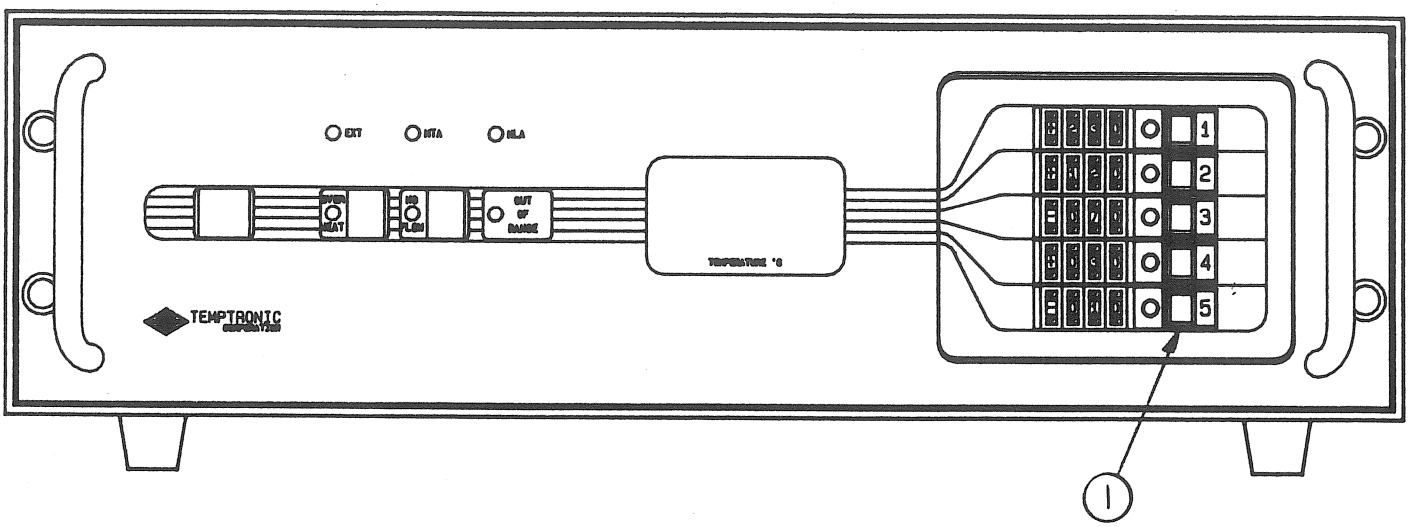

Figure 3-3. Microprocessor Controller Front Panel Options.

Item	Designation	Function	Explanation
1	TEMPERATURE SET SELECT switch (only supplied with multiple set switch)	Selects a specific TEMPERATURE SET switch.	A separate pushbutton switch is supplied with each TEMPERATURE SET switch. When depressed selects corresponding switch allowing the indicated temperature to be inputted to the temperature control circuit.

3-3.2.2 Microprocessor Controller Options (back panel)

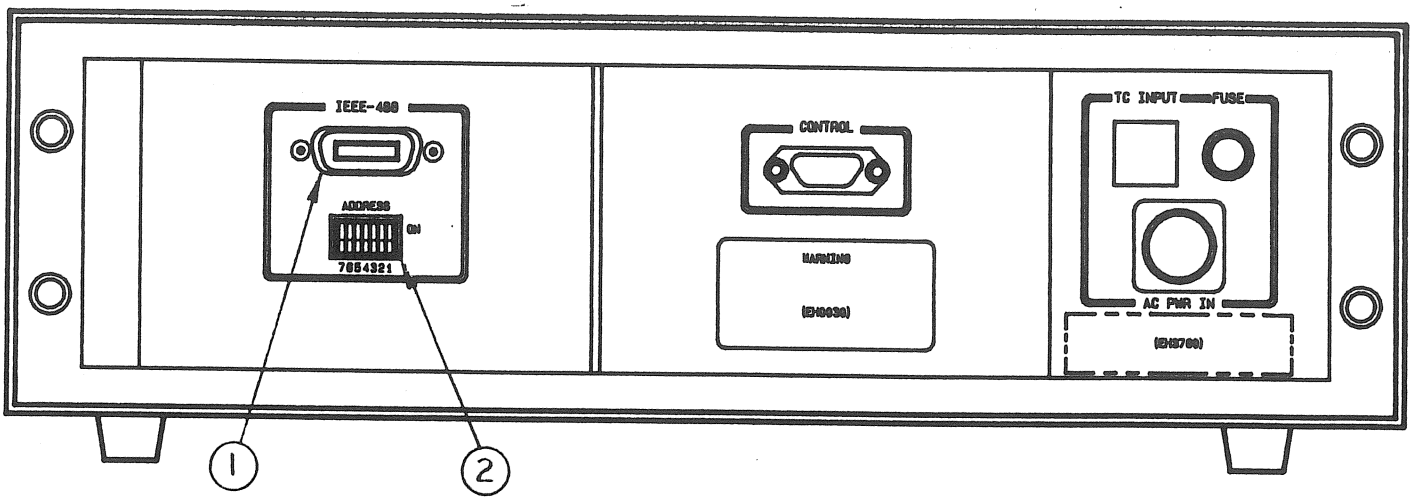

Figure 3-4. Microprocessor Controller Back Panel Options.

Item	Designation	Function	Explanation
1	IEEE-488 I/O	Enables external interfacing with automated testers.	Allows microprocessor controller to communicate with external devices over the IEEE-488 bus.
2	Address switch	Sets the system address	Allows the system to be identified on a bus with several devices. Switch setting is set only during the power up sequence.
3	BCD I/O (not shown)	Enables external interfacing with automated testers.	Allows microprocessor controller to communicate with external devices using BCD format.

3-3.4 Power Controller (front panel)

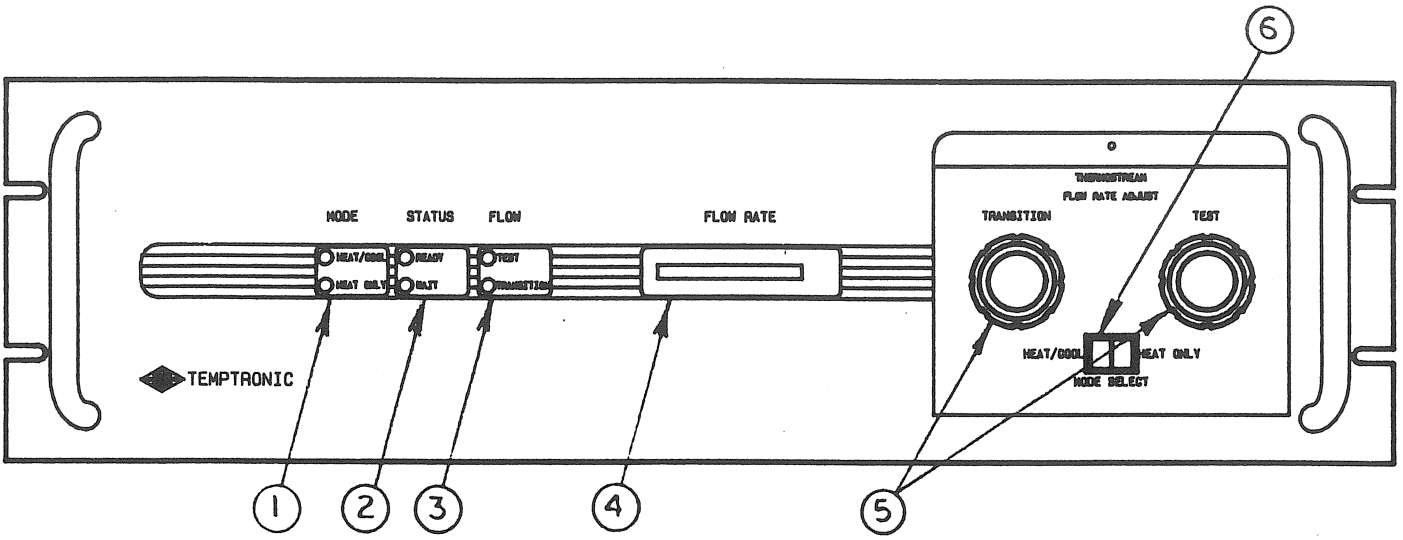

Figure 3-5. Power Controller Front Panel.

Item	Designation	Function	Explanation
1	MODE indicators	Indicates when the compressors of the secondary heat exchanger are on or off.	These indicators function in conjunction with the MODE switch. One of the 2 red LEDs will be illuminated to indicate if the refrigeration system is required for HEAT/COOL operation or if off for HEAT only.
2	STATUS indicators	Indicates the system availability.	Two red LEDs are associated with this feature. One gives a "WAIT" indication when HEAT/COOL mode is selected but the refrigeration system is not fully ready for operation. The other indicates when all are "READY".

Item	Designation	Function	Explanation
3	FLOW indicators	Indicates which flow valve(s) is controlling the gas flow at any time.	Two red LEDs are associated with this feature. They indicate the state of the TRANSISTION & TEST Valves (flow channels). Valve selection is made by the microprocessor depending on operator choice (Sections 3-8.4 & B-8.10). System default at power up is TRANSITION on when making a temperature excursion and switching to TEST when temperature is within ±2°C of the SET TEMPERATURE.
4	FLOW meter	Indicates gas flow in both CFM and L/sec.	This device is a mass flow meter. The LED-bar indicator is capable of indicating a flow rate from 2 to 12 standard cubic feet per minute (SCFM) or from 1 to 5 liters per second (L/sec).
5	GAS FLOW valves (behind hinged panel)	Provides 2 gas flow settings, each able to set from 2 to 12 SCFM or 1 to 5 L/sec. (Left...Transition Right...Test).	Allows manual adjustment of the gas flow to optimize the system operation for each requirement. This feature improves through-put while minimizing gas usage and operating noise.
6	MODE switch (behind hinged panel)	Provides manual selection of heat-and-cool or heat only operation.	This rocker switch allows the refrigeration system to be turned off for power conservation and noise reduction when no cooling will be required for extended periods.

3-3.5 Power Cont roller (back panel)

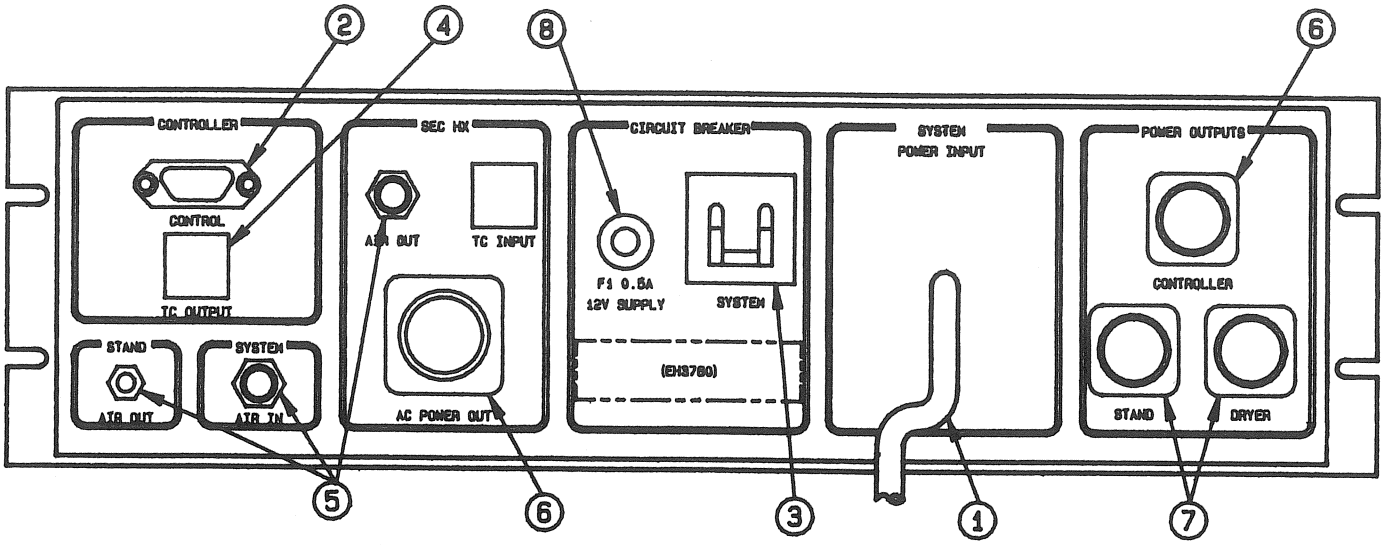

Figure 3-6. Power Controller Back Panel.

Item	Designation	Function	Explanation
1	POWER cord	Provides input for system power.	Connects ac power to the power controller and the system.
2	INTERFACE CABLE receptacle	Links power controller to microprocessor controller.	Allows the power controller functions to be controlled by the microprocessor controller.
3	CIRCUIT BREAKER	Protects entire system.	Will open circuit the ac power to the system when the current draw exceeds 25 amps, it is manually resettable when the problem has been remedied.
4	THERMOCOUPLE receptacles (two provided)	Accepts leads from the controlling thermocouple (T/C) and the microprocessor T/C interconnect cable.	The 2 receptacles are thermocouple feed throughs for the controlling T/C to the microprocessor.

Item	Designation	Function	Explanation
5	GAS barbed fittings (three provided)	Provides ports for gas input and output. Air in: $^3/_8$" Air out: $^3/_8$" Stand air: $^1/_4$"	Allows gas supply to be connected to the system for regulation and distribution to the heater housing assembly, ThermoCap and/or optional stand.
6	AC POWER ms connectors (two provided)	Provide AC power distribution.	Connects ac power to the microprocessor controller, secondary and primary heat exchangers.
7	DC POWER ms connectors (two provided)	Provide DC power distribution.	Connects dc power to the optional stand and gas dryer.
8	FUSE (.5 amps. slow blow)	Protect 12vdc power supply	Device to protect the 12vdc power supply which drives the optional stand and air dryer from experiencing excessive heat.

3-3.6 Primary Heat Exchanger (heater housing assembly)

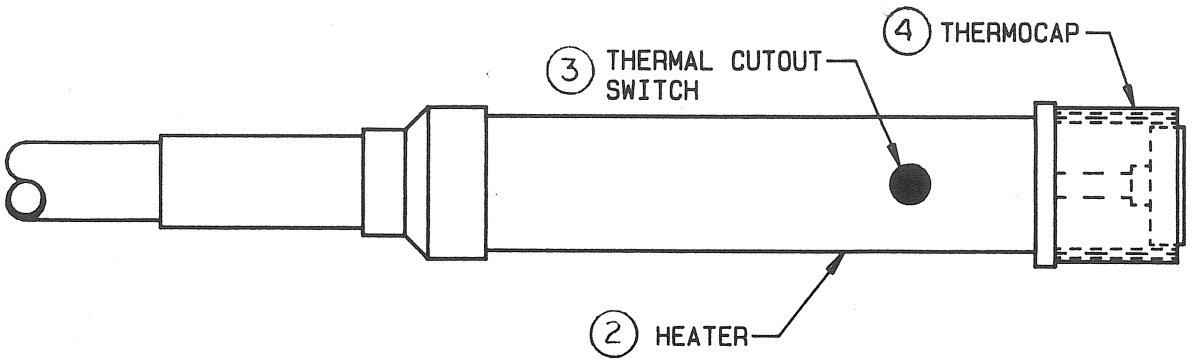

Figure 3-7. Primary Heat Exchanger (WAND).

Item	Designation	Function	Explanation
1	THERMOCOUPLE (not shown)	Senses gas temperature.	Allows accurate sensing of gas stream temperature. A single junction type "T" (copper-constantan) couple is used for the entire temperature range. The T/C junction is located as close as practical to the DUT.
2	HEATER	Conditions gas stream to the desired temperature.	A resistive type heater is housed in the primary heat exchanger and is powered when the gas temperature is below the desired (set) temperature.

Item	Designation	Function	Explanation
3	THERMAL CUTOUT switch	Protects the primary heat exchanger from a thermal run-a-way condition should the NO FLOW indicator circuit fail or the heater temperature should rise above safe limits for any reason whatever.	This is a self resettable bi-metal temperature sensitive switch which is mounted in the primary to sense the heater case temperature. It is wired in series with the heater so if the heater should ever become powered when there is no gas flow, this switch will open thus removing power to the heater.
4	THERMOCAP (recommended option)	Provides thermal coupling to the DUT.	Recommended option which attaches to the end of the primary heat exchange to create a close coupling of the controlled temperature gas to the DUT. In the case of the double wall THERMOCAPS, condensation is greatly reduced to the point where it can be considered eliminated.

3-3.7 Secondary Heat Exchanger (refrigeration system)

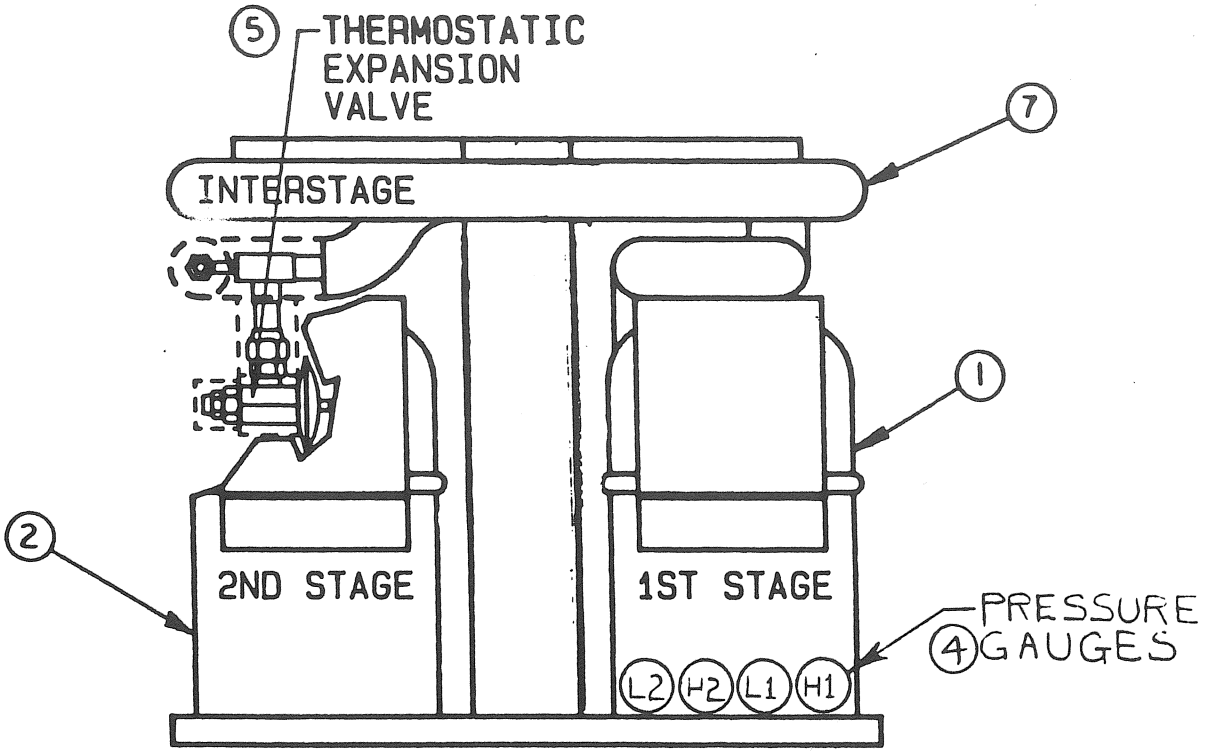

Figure 3-8. Secondary Heat Exchanger.

Item	Designation	Function	Explanation
1	FIRST STAGE	High temperature compressor stage which cools the low (second) temperature stage.	This is a self-contained closed-loop refrigeration system which is used to cool the second stage.
2	SECOND STAGE	Low temperature compressor stage which cools the gas stream.	This is a self-contained closed-loop refrigeration system which cools the gas stream as it passes through the suction line evaporator. The compressor for this stage does not start until 5 minutes after the first stage compressor has.
3	DISTRIBUTED EVAPORATOR [Suction line] (not shown)	Connects the primary and secondary heat exchangers, provides second stage evaporator, and houses all electrical wires to the primary.	This is a flexible hose assembly between the secondary and primary heat exchangers which affords an efficient means of removing heat from the gas stream and versatility when interfacing to testers.

Item	Designation	Function	Explanation
4	PRESSURE GAUGES (4 provided)	Indicates the suction and discharge pressures of each refrigeration stage.	One low pressure and one high pressure gauge have been integrated into each refrigeration stage. These gauges are intended to provide a visual means of verifying the operation of each stage. They are mounted such that they are visible through the rear screen.
5	THERMOSTATIC EXPANSION VALVE (TEV)	Senses load on refrigeration system then meters refrigerant to compensate.	This device is incorporated in the first stage refrigeration system. It senses demand on the system by sensing the suction line super heat temperature.
6	THERMOCOUPLE [2 provided] (not shown)	Sense interstage temperature.	Two (2) type "T" thermocouples are permanently (1 to each stage) mounted to the cascade refrigeration system. Their purpose is to allow monitoring of the system when trouble-shooting a suspected refrigeration problem.
7	INTERSTAGE	Serve as 1st stage evaporator and 2nd stage condensor allowing 2nd stage refrigerant (R170) to be condensed.	The purpose of this assembly is to allow the 1st stage refrigeration system to remove heat from the 2nd stage refrigeration system. It is a tube within a tube construction.

3-4 SYSTEM OPERATION

Upon power-up, prior to the purge cycle, the microprocessor performs a self diagnostic routine and interrogates both the temperature control and flow circuits for an OFF condition. If an error is detected it will be displayed (see Section 3-5) on the temperature controller front panel. The "WAIT" indication is given during the power-up and purge sequences.

A 90 second purge cycle will be initiated if no error was detected. This routine requires the recommended 65psig. dry gas source be available to the system. Both the TRANSITION and TEST solenoids (K8 & K9 schematic designations) are open at this time. The FLOW METER indication (may be off scale) will be the combined GAS FLOW valve settings.

If the system is configured with the optional stand the HEAD (Heater Housing Assembly) will raise and the purge air is exhausted to ambient. Once the system is "READY" the flow will automatically be stopped when the HEAD is raised and initiated when lowered. FLOW can be initiated (if desired) when the HEAD is raised by either depressing the FLOW switch or by sending the appropriate IEEE-488 command (see Appendix B-8).

The total time delay (as timed by the microprocessor) before obtaining a "READY" status depends on the MODE switch position, approximately 2 minutes for Heat Only and 10 minutes for Heat/Cool. The system functions are available only after obtaining a "READY" status.

During local/manual operation the desired test temperature is input by means of front panel pushbutton switches. The lamp adjacent to the selected TEMPERATURE SET switch blinks until the SET TEMPERATURE is reached (±2°C of SET TEMPERATURE) after which the lamp stays lit continuously ("AT TEMP" indication). When the system reaches 2°C of the SET TEMPERATURE a 2.5 second

delay is initiated, before the "AT TEMP" indication is given, to allow the system to stabilize as the result of any transients caused by switching of flow rates. This non-adjustable time delay should not be confused with the SOAK TIME routine (-986) mentioned in Section 3-8. If the system is configured for either IEEE-488 or BCD operation refer to the appropriate appendix.

The gas temperature is sensed by means of a type "T" thermocouple (copper-constantan) located very close to the output end of the heater nozzle. The temperature controller compares the SET TEMPERATURE setting against the actual gas temperature and regulates the heater power circuit to bring the two into conformance. The sensed temperature is displayed on the microprocessor controller front panel.

The testing environment is achieved by first cooling, if the heat-and-cool mode has been selected, the dry gas-stream with the secondary heat exchanger, then heating the stream to the desired temperature in the primary heat exchanger.

The manual flow adjustments housed in the power controller allows separate flow rate settings (2 to 10 SCFM) on either channel. The flow indicator will indicate the flow of the active channel.

Upon initial power on the FLOW MODE defaults (is set) to the Automatic mode. In this mode a preset maximum flow rate (TRANSITION) can be selected and supplied until the desired temperature is reached, then the stream flow, after the temperature is within 2°C of the SET TEMPERATURE and any pre-programmed time delay (SOAK TIME, see Section 3-8), will automatically switch to another preset rate (TEST), the same as or lower than the TRANSITION rate, depending on the application and the interest in conserving gas flow or reducing ambient noise.

Four (4) different FLOW MODES are possible as outlined in Section 3-8 (see Appendix B-8 if IEEE-488 option is installed).

A recommended optional Thermal Cap or equivalent and various size enclosures, which attach to the end of the primary heat exchanger, interface to the tester and DUT to form an effective environmental test compartment.

Refer to Section 4 for a further discussion of the system operation.

3-5 SYSTEM FUNCTIONAL CHECKOUT

The following procedure should be performed to verify system operation before placing the Model TP0412A ThermoStream System in use and interfaced to the tester.

1 Verify all electrical and gas connections are as outlined in Section 3-2 including main power connection and input gas.

2 Set +25°C on the microprocessor controller TEMPERATURE SET switch (middle switch if configured with 5 TEMPERATURE SET option).

3 Switch the power controller MODE SELECT switch, located behind the hinged panel, to the HEAT/COOL position. Refer to Section 3-3.4 item 6 for an explanation of this switch.

4 Initiate power by depressing the microprocessor controller POWER switch. If certain error conditions are present at power-up the system will hang-up and one of the following lamp displays will be observed.

CONDITION	OVER HEAT INDICATOR	NO FLOW INDICATOR	OUT OF RANGE INDICATOR
J1-P8, J1-P13 & J1-P17 not at logic zero (0)	OFF	OFF	ON
Safety return reads safe when it should read unsafe	OFF	ON	OFF
Flow detected when valves should be closed. (Bar graph LED(s) usually lit also)	OFF	ON	ON
ROM U6 checksum error	OFF	ON	OFF
ROM U13 checksum error	OFF	ON	ON
ROM U8 checksum error	ON	OFF	OFF

NOTE

These tests are made in the sequence as listed. If any of the conditions are observed power down the system then apply power again. If condition persist contact the factory.

5 Both TEST and TRANSITION valves will open to allow a 90 second gas purge of the system. The purge will be initiated if there are no error conditions and the appropriate air/gas supply (at least 2SCFM) is available to the system.

A flashing FLOW lamp indicates a lack of gas flow. Regulate the system input gas supply to 65 psig. (recommended input to the optional Air Dryer is 100 psig. [Appendix B-2]).

If the system is configured with the optional stand the HEAD (Heater Housing Assembly) will automatically raise as soon as the purge is initiated.

6 The TEMPERATURE meter will indicate some temperature (usually ambient). Simultaneously the "AT TEMP" indicator (#3 on the 5 Temperature Select Module), refer to Section 3-3.1 item 9, will become active.

7 Observe the power controller STATUS indicator. A "WAIT" indication should be given at this time. Ten (10) minutes after power-up this indicator should go out and the "READY" lamp comes on signifying the system is now operational.

8 At power on the system defaults to;

- a "SOAK TIME" of zero (0) seconds
- a control-constant for a 40 pin plastic device (Applicable only if DUT option is installed.)
- the air temperature range limits of -70°C and +205°C (The system has a temperature range specification of -70°C to +200°C. However, the upper limit has been programmed to 205°C to permit the system to deliver sufficient temperature to bring a large device to +200°C.)

To change these constants refer to Sections 3-8 or B-8.4.

9 Depress the FLOW switch to initiate flow. After the system has selected the TEST channel adjust the TEST valve until 3SCFM is indicated on the FLOW meter. Refer to Section 5-3.3 if flow calibration is required.

10 Change the SET TEMPERATURE on the functioning TEMPERATURE SET switch to -70°C and adjust the TRANSITION valve until 10SCFM is indicated on the FLOW meter. Observe that the flow channels will switch when the system reaches -68°C.

Loss in temperature may be experienced due to the change in load when the switching of channels occurs. However, the system should recover. The implementation of the "SOAK" routine and/or adjusting both FLOW channels so there is less of a change in the load will minimize this condition. Another solution would be to program the system to remain in one of the other 3 flow conditions (TEST only, TRANSITION only or both TRANSITION and TEST).

11 After the system has reached and is controlling at -70°C set -71°C on the functioning TEMPERATURE SET switch. Observe that the OUT OF RANGE indicator turns on and there is no change in flow conditions.

12 Set -81°C on the functioning TEMPERATURE SET switch. Observe that the system continues to control at -70°C and the AT TEMP indicator remains solid to indicate that the system is at the set control point. Refer to Section 3-8 (-985 routine) to change this limit if checking the refrigeration system ultimate low temperature is required.

13 Using the same TEMPERATURE SET switch set +205°C. Observe that the OUT OF RANGE indicator turns off, the system changes flow valves, when the temperature is +203°C the system changes flow valves and the AT TEMP indication is given.

14 Using the same TEMPERATURE SET switch set +206°C. Observe an OUT OF RANGE indication.

15 Using the same TEMPERATURE SET switch set +215°C. Observe that the system continues to control at +205°C and the AT TEMP indicator remains solid indicating that the system is at the set control point.

OPTIONAL STEPS

16 Momentarily unplug the thermocouple cable at the rear of the microprocessor controller. Observe the following;

a) Both TEST and TRANSITIONS valves open.
b) System begins cooling (heater is off). Approximately 10 seconds the flow will stop (NO FLOW indication).
c) OVERHEAT indicator is blinking (indicates a sense input error).

17 Reinstall the thermocouple cable (ensure proper polarity), depress the RESET switch.

18 Depress the FLOW switch to initiate flow and return to normal operation.

Checking the operation of the HEAT ONLY mode may be desired. To do so, place the MODE SELECT switch in the HEAT ONLY position, the compressors and fan will stop. Then set any temperature between +50°C and +205°C. The system should heat to the requested temperature and control there until another temperature is requested.

If the system is configured with the multiple (5) TEMPERATURE SET switch option, it may be desirable to check each SELECT switch, TEMPERATURE SET switch, and "AT TEMP" indicator for proper operation at this time. This can be done by selecting each TEMPERATURE SET switch in turn and observe if the system responds as expected to SET TEMPERATURES within the system operating range. Another method for verifying the multiple switch option is detailed in Section 6-3 routine -992.

If no malfunctions occurred during this procedure the system has been proven functional and ready for installation. It is not necessary to repeat this procedure each time the system is powered up. However, it may be desirable to repeat it whenever a problem is suspected.

The test site should be properly prepared in accordance to Appendix C-2 and the system should be operated as detailed in Sections 3-6 and 3-7. For convenience 2 hang tags imprinted with the same information is located in Appendix D. Remove 1 tag at this time and attach it to the temperature controller handle using 1 of the 2 tie wraps provided in the back of this manual.

For systems configured for IEEE-488 or BCD operation refer to Appendices B-8 or B-9 respectively for implementation.

3-6 SYSTEM START-UP

This procedure is recommended for system start-up once the initial set up, interfacing, and checkout have been successfully performed.

1. Verify all electrical and gas connections as outlined in Section 3-2.

2. Set +25°C on the TEMPERATURE SET switch (use the middle switch if the 5 TEMPERATURE SET option is installed).

3. Set the MODE SELECT switch to the desired position (Heat Only or Heat/Cool).

4. If convenient, note the refrigeration gauge readings to verify that there is pressure in the system. This especially applies if system is to be operated in the HEAT/COOL mode.

5. Initiate power by depressing the POWER switch.

6 Both TEST and TRANSITION valves will open to allow a 90 second gas purge and the HEAD will raise. The purge cycle will start ONLY when there is sufficient gas flow (minimum 2 SCFM). A flashing FLOW lamp indicates a lack of gas flow. After 90 seconds the purge will be complete and gas flow will stop.

Upon power-up the following constants are set;

- Temperature range limits of -70°C and +205°C
- Automatic valve switching
- "SOAK TIME" of zero (0) seconds
- DUT control-constant for a 40 pin plastic device (Applicable only if the DUT option is installed.)

To change any of these constants refer to Section 3-8.

7. Position the primary/Thermal Cap against an insulated surface during this procedure or whenever the system is operating but not interfaced to the tester. This will prevent either inadvertent operator contact with extreme temperature air or condensation inside the Thermal Cap during cold temperature operation.

8. If the OVERHEAT indicator lights, depress the RESET switch then the FLOW switch to initiate flow.

9. Wait for a system "READY" status indication then begin desired test functions.

3-7 SYSTEM SHUT-DOWN

The Model TP0412A ThermoStream System may be shut-down at anytime by depressing the system POWER switch on the front panel or throwing the system MAIN CIRCUIT BREAKER on the rear of the power controller. However, in the HEAT/COOL mode, the timed delay start-up sequence will be initiated during each start-up, so pre-mature shut-downs or shut-downs for brief time periods (less than 30 minute durations) should be avoided. During these periods, leave the system on with the gas flow switch off.

The following procedure is suggested for routine system shut-down.

1. Set +25°C on the TEMPERATURE SET switch which is initiated during system start-up.

2. Command the system to go to +25°C. Wait for an "AT TEMP" indication before depressing the POWER switch.

3-8 ADDITIONAL MICROPROCESSOR FUNCTIONS

The microprocessor has been programmed to permit several of the factory pre-programmed constants to be changed either from the front panel or over the IEEE-488 Bus if the option is installed.

The following list shows the codes and gives a brief explanation of each routine. Front panel implementation of these routines is given in subsequent sections, refer to Appendix B-8 for accessing using IEEE-488 format. Each modifying routine has been assigned a code which is input using the TEMPERATURE SET switch (command control switch) located in the yellow band of the rainbow. Six front panel indicator lamps are used to indicate which function is being modified.

Code	Function
-980	Device control set up for testing 40 pin plastic devices. This is slowest preset rate of temperature change.
-981	Device control set up for testing 40 pin ceramic devices.
-982	Device control set up for testing 14 pin plastic devices.
-983	Device control set up for testing 14 pin ceramic devices. This is fastest preset rate of temperature change.
-984	Sets system upper temperature limit and OUT OF RANGE indication.
-985	Sets system lower temperature limit and OUT OF RANGE indication.
-986	Sets "SOAK TIME" which defaults to zero (0) on power up.
-987	Used to select FLOW modes (4 possible).
-988	No function
-989	No function

It should be noted, that the information entered using these routines, is erased when the system is shut down. It may be desirable to leave the system powered and simply switch off the refrigeration and air system using the MODE and FLOW switches.

To return to the factory preset constants, either power down and restart the system following the start-up procedure or select the proper code and re-enter the original value.

3-8.1 -980 through -983 Routine

These routines are used to select predetermined control constants based on the type of device being tested. These routines will only be effective when the system is operated using the DUT Control Option.

For devices which do not fall into these 4 categories, select the routine which most closely describes the DUT's configuration.

To implement perform the following steps:

1. Select the TEMPERATURE SET switch located in the yellow band of the rainbow and set for -980, -981, -982, or -983.
2. While depressing the FLOW switch momentarily depress and release the RESET switch now release the FLOW switch. The cluster of 6 indicators on the microprocessor front panel should indicate as shown below.
3. Press the RESET switch. The new constant has been selected.

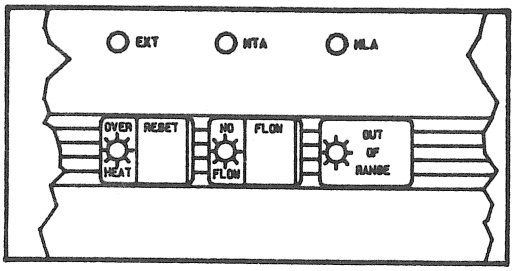

-980 selected

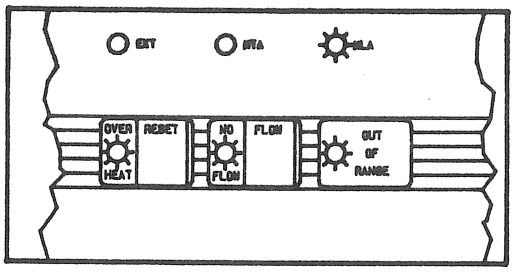

-981 selected

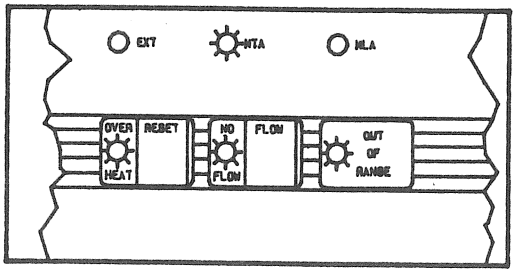

-982 selected

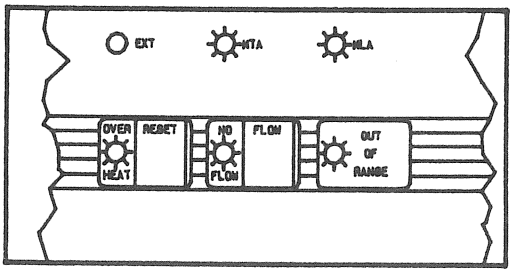

-983 selected

3-8.2 -984/-985 Routine

These routines permit the setting of a different upper and lower air temperature limit. Normally these limits should be within the system temperature specifications. An "Out of Range" indication will be generated if the SET TEMPERATURE is outside of these limits and the air temperature will not be allowed to exceed them. The system over heat circuit will prevent the air temperature from exceeding +211°C should an excessively high limit be entered.

To implement perform the following steps:

1. Select the TEMPERATURE SET switch (middle) and set for -984 upper or -985 lower.
2. Depress and hold the FLOW switch while momentarily depressing the RESET switch then release both switches.
3. Change the TEMPERATURE SET switch thumbwheels to the desired limit.
4. Press the RESET switch. The new limit is set.

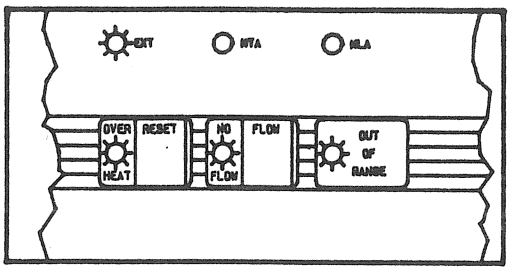

-984 selected

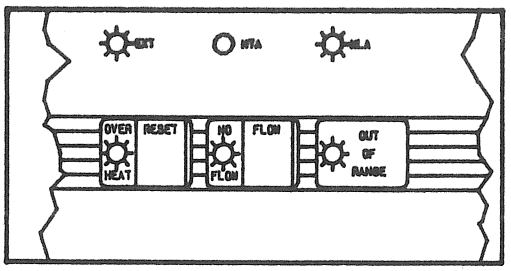

-985 selected

3-8.3 -986 Routine

This routine is used to set a "SOAK TIME" other than the system default value of zero 0 seconds (0 to 999 seconds is permitted). This time starts when the system reaches 2°C of the SET TEMPERATURE. During this time no AT TEMP indication or FLOW valve switching (if in Automatic mode) will occur.

"SOAK TIME" should not be confused with the programmed 2.5 second delay to damp transients due to valve switching associtated with the Automatic mode before the AT TEMP function is enabled.

To implement perform the following steps:

1. Set the TEMPERATURE SET switch (select the middle) to -986.
2. While depressing the FLOW switch depress the RESET switch and release both switches. The cluster of 6 indicators on the microprocessor front panel should indicate as shown below to indicate the routine is initiated.
3. Change the TEMPERATURE SET switch thumbwheels to the desired soak time, in seconds (the sign will be ignored).
4. Depressing the RESET switch will simultaneously enter the new "SOAK TIME" and end the routine.

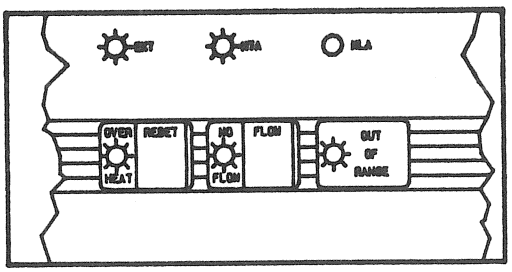

-986 selected

3-8.4 -987 Routine

This routine is used to select a FLOW mode other than the system default of Automatic mode. Automatic mode utilizes both valves; TRANSITION when making a temperature excursion and switching to TEST when the temperature is within 2°C of the SET TEMPERATURE.

To implement perform the following steps:

1. Select the TEMPERATURE SET switch located in the yellow band of the rainbow and set for -987.
2. While depressing the FLOW switch depress the RESET switch then release both switches. The cluster of 6 indicators on the microprocessor front panel should all be lit as shown below.
3. Change the TEMPERATURE SET switch thumbwheels to indicate the value for the desired mode (the sign will be ignored).

000.....TRANSITION/TEST (automatic switching - system default)
001.....TEST valve only
002.....TRANSITION valve only
003.....TRANSITION & TEST valve combined flow setting

4. Press the RESET switch. The new mode is set.

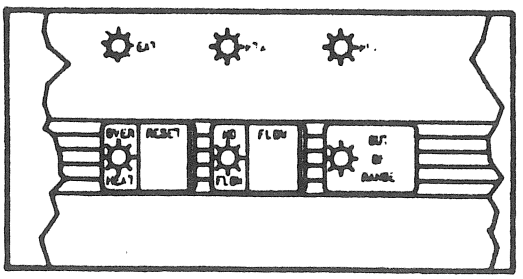

-987 SELECTED

SECTION 4
THEORY OF OPERATION

4-1 THERMOSTREAM® THEORY

Test objects are brought to and maintained at precise TEST temperatures by placing them in a controlled temperature gas stream. Heat is transferred to or from the TEST objects in this stream by forced gas convection.

The localized, high velocity, well controlled air surrounding the component and the TEST socket provides low temperature gradients across the DUT and small deviation between the temperature indicated on the thermal system and that of the DUT.

The accuracy, stability and repeatability of the DUT temperature as well as the temperature TRANSITION times between one TEST temperature and the next vary greatly depending on the quality and the type of thermal control technique used, and on the configuration of the DUT.

For simplicity and system reliability, ThermoStream® systems use reheat temperature control in an open loop configuration. A dry compressed gas with a dew point below the system temperature specifications is usually first refrigerated to a temperature lower than the lowest ThermoStream system specification temperature and then reheated to the desired control temperature. While at the control temperature, the gas is directed at the TEST object within a small enclosure (to enhance forced convection heat transfer) and then vented to the atmosphere. Refer to Figure 4-1 AirStream/DUT Block Diagram.

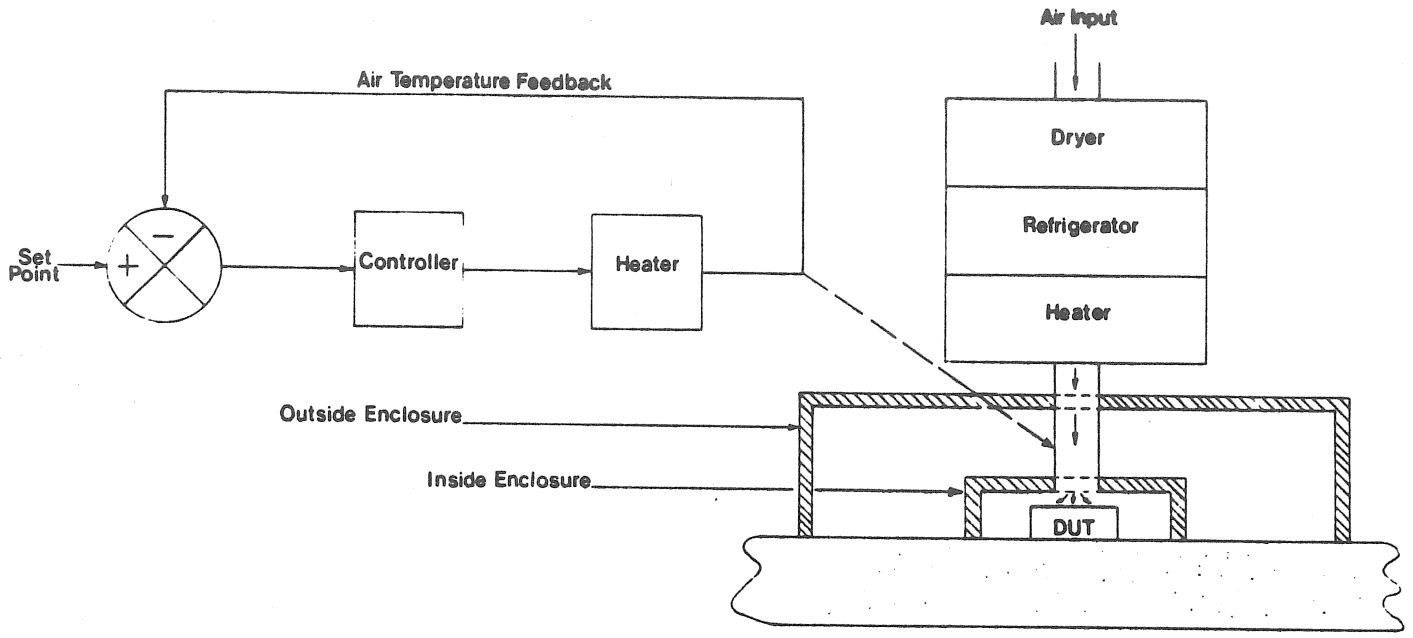

Figure 4-1. AirStream/DUT Block Diagram.

An electronic temperature controller is used to compare the user input set temperature with the actual gas stream temperature as sensed by a low mass thermocouple located near the TEST object. The temperature controller turns on an electrical resistance heater if the gas temperature is below the set temperature. Or, it turns the heater off if the gas temperature is above the set temperature.

4-2 SYSTEM FUNCTIONAL DESCRIPTION

The TP0412A ThermoStream® System is designed around a microprocessor system. This technology permits a larger variety of control possibilities, options, and is easier to manufacture and service than is feasible with hardware-oriented designs. Control features and options can be changed or added by making software modifications.

A system functional block diagram of the Model TP0412A ThermoStream System is shown in Figure 4-2.

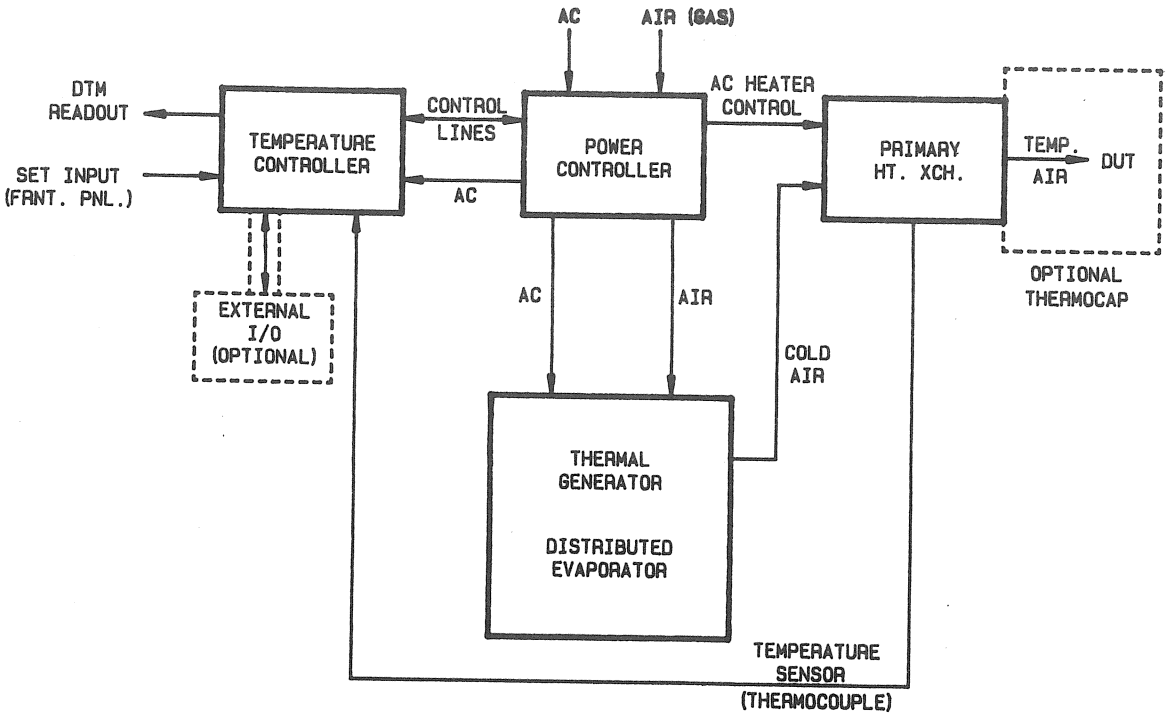

Figure 4-2. System Block Diagram.

To facilitate manual control and operation the system provides a 3½ digit (3 digit plus polarity) LED temperature display, as well as "OVERHEAT", "OUT OF RANGE", and "TEST" indicators. A single 3½ digit pushbutton temperature set module or optional 5-input module may be located either at the controller front panel (standard configuration) or up to 12 feet away from the controller (optional). The temperature set module indicates the SET TEMPERATURE(s), the selected temperature, and whether the air/gas stream temperature has reached the set value.

For automatic operation, the system provides all necessary input/output signals at TTL levels on optional BCD or IEEE-488 computer interface lines.

To accelerate temperature change, but reduce air consumption and noise, two (2) manually adjusted air/gas flow channels are provided. One channel (TRANSITION) may be preset for maximum (10SCFM) flow and the second channel (TEST) may be preset for some other rate (3SCFM is recommended although 2 to 10SCFM is possible). The microprocessor will select the appropriate channel or channels depending on user's choice. If operating in the default mode the TRANSTION channel when a change in temperature is requested and will switch to the TEST channel once the desired temperature is reached. When the user's choice is for both channels to be open the flow will be the sum of the two, that is, if TRANSITION is adjusted to 6SCFM and TEST is adjusted to 3SCFM when on together the resultant flow will be 9SCFM.

The ThermoStream WAND assembly permits a variety of configurations, including the double wall transparent Thermal Cap (optional) which eliminates the possibility of frost condensation at the TEST site during low temperature operation. Within the Thermal Cap, a nozzle and enclosure (shroud) assembly concentrates the temperature controlled air around the component and automatically adjusts for various component heights. The nonbreakable enclosures have been designed for ease of orientation to the DUT and easy interchange.

Standard system configuration places the controlling temperature sensor near the nozzle outlet in proximity to the DUT. This sensor location, in conjuction with the unique enclosure design, make it possible to closely control the DUT's temperature with minimal offset. An option (see Appendix B-10) is available permitting control (temperature sensing) directly from the DUT.

The system can be easily interfaced with complex testers. An effective thermal insulation kit is supplied with the system to protect the tester circuitry adjacent to the TEST socket from the thermal effects of the air/gas stream. The TEST site should be prepared in accordance with the concepts presented in Appendix C-2.

4-3 SUBASSEMBLY FUNCTIONS

Though the following discussion of each of the four (4) major subassemblies is presented separately, it is important to recognize the interdependency of each component.

4-3.1 Microprocessor Controller

The microprocessor controller design is based on an Intel 8085 microcomputer system. The controller governs the system's principle control operations. The basic microprocessor controller contains the system's only POWER switch, accepts a type "T" thermocouple input, provides a temperature digital readout with corresponding analog out signal, allows setting of desired TEST temperatures, contains factory set system limits, "NO FLOW" and "OVERHEAT" indicators, and RESET switch.

The controller is used to power up the system, interrogate the supplied temperature and compare it against both the requested and system limit temperatures. It controls the solid state relay (K4 - schematic designation) in the power controller which supplies the ac power to the heater located in the (WAND). The controller also provides all timing sequences.

Several controller options/enhancements are available which extend the system's capabilities. A five (5) TEMPERATURE SET module replaces the supplied single TEMPERATURE SET switch. A removeable TEMPERATURE SET module for remote desk top temperature setting is offered, and external software control may be obtained by adding either the BCD or IEEE-488 option.

The circuit analysis of the microprocessor controller is discussed in two sections: analog and digital. The analysis of the analog section covers the analog measurement circuit, sensor, and analog-to- digital converter. The digital circuit is discussed in two aspects: control and communication.

4-3.1.1 Analog Section

The analog circuit is shown in the functional block diagram of Figure 4-3. The primary thermocouple sensor located in the gas stream, delivers to the temperature monitor a microvolt signal proportional to the sensed temperature. The temperature monitor is a self-contained device that displays the temperature of the gas stream and also provides the amplifier stage with a signal of the displayed value equivalent to 10 mv/°C. The analog-to-digital converter digitizes the amplified analog input with 20 counts/°C of resolution and delivers the count to the digital section. A second amplifier stage and analog switch allow the microprocessor to read a second temperature for device control when the Device Under Test (DUT) Control Option is installed.

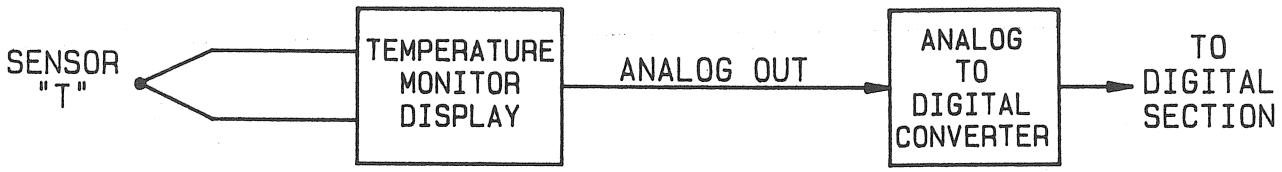

Figure 4-3. Analog circuit functional block diagram.

4-3.1.2 Digital Section

The digital circuit and hardware are shown in the functional block diagram of Figure 4-4. The digital controller section reacts to the various inputs according to the Program Residing in the Memory (PROM). The responses can be control of system parameters (heat, cool, flow) or control of communication input/output signals (front panel, BCD, IEEE-488).

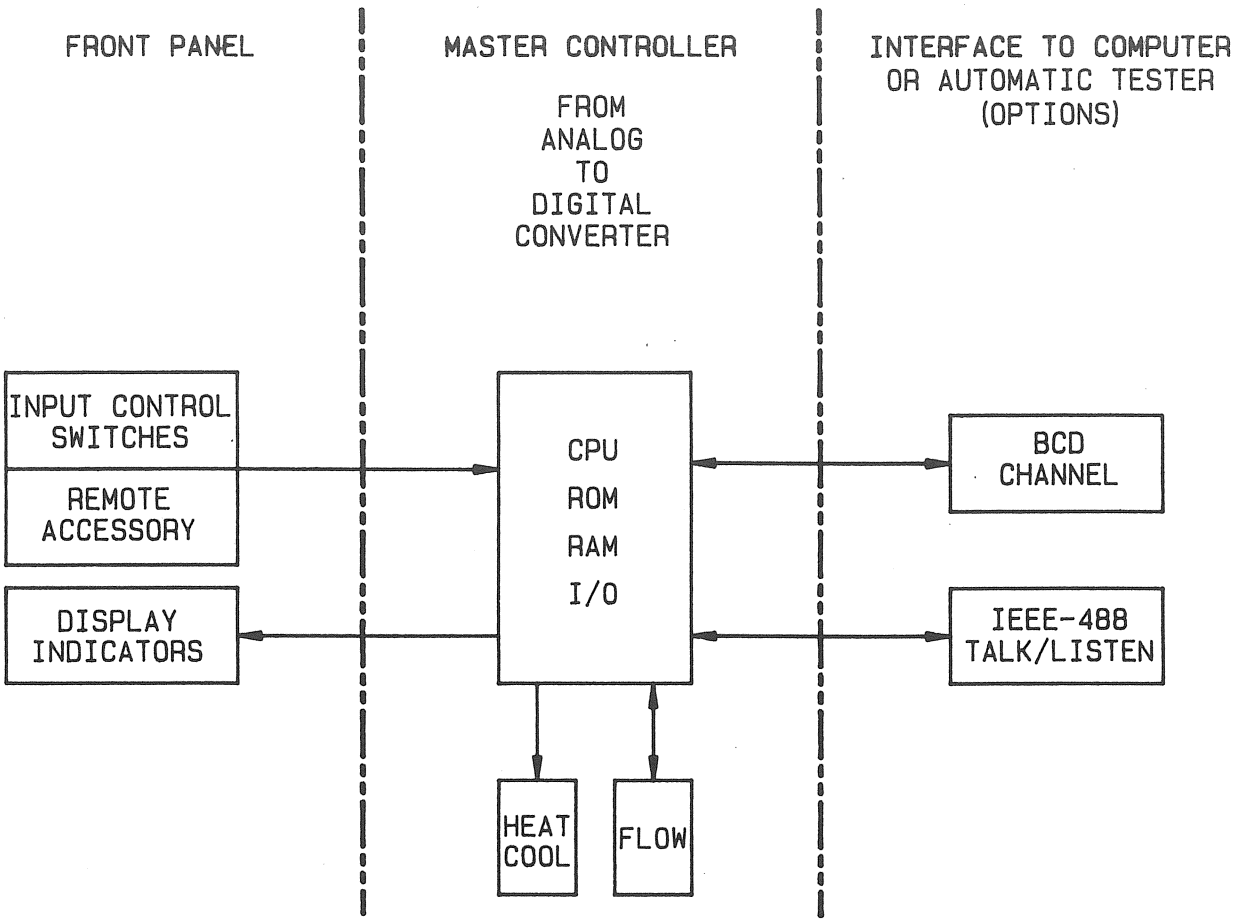

Figure 4-4. Digital circuit functional block diagram.

Basic Operation

The primary function of the temperature controller is to set the temperature of the gas stream (the Current Temperature) equal to the temperature requested by a set of thumbwheel inputs (the Set Temperature). The control system uses a PID algorithm to accomplish this.

4-3.2 Power Controller

The power controller, housed in the secondary heat exchanger cabinet, is the interface between the microprocessor controller, primary, and secondary heat exchangers.

This assembly contains all gas flow control and monitor devices, heater control solid state relay, system MODE select switch, system MAIN CIRCUIT BREAKER, and ac power for the other major subassemblies, as well as dc power for the optional stand and air dryer.

A LED mass flow meter is provided to allow optimization of gas flow for TEST requirements. This meter circuit has been calibrated, as outlined in Section 5-3.3, at time of manufacture. It should require only periodic verification.

The gas ports on the power controller rear panel are appropriately identified. The port labeled "STAND AIR OUT" is intended to be connected to the optional stand but if none exist, this port should be connected to the optional double wall Thermal Cap barbed fitting. The flow is regulated by R1 (schematic designation), which is factory preset to 30psig maximum, and controlled by the stand solenoid K9 (schematic designation).

The gas stream heater (located in the WAND), receives its ac power from a solid state relay (K4 - schematic designation) located in the power controller. This relay is controlled by the microprocessor controller.

The MODE select switch allows the system to be operated in the HEAT ONLY mode for above ambient testing. This feature is intended to eliminate unnecessary noise during system operation. This mode does not require the 10 minute time delay required by the refrigeration system making the system readily available.

A time lapse meter to record hours of system operation is located in the power controller.

Figure 4-5 showes the pneumatic diagram. The electrical schematic (D4124) is provided in section 7.

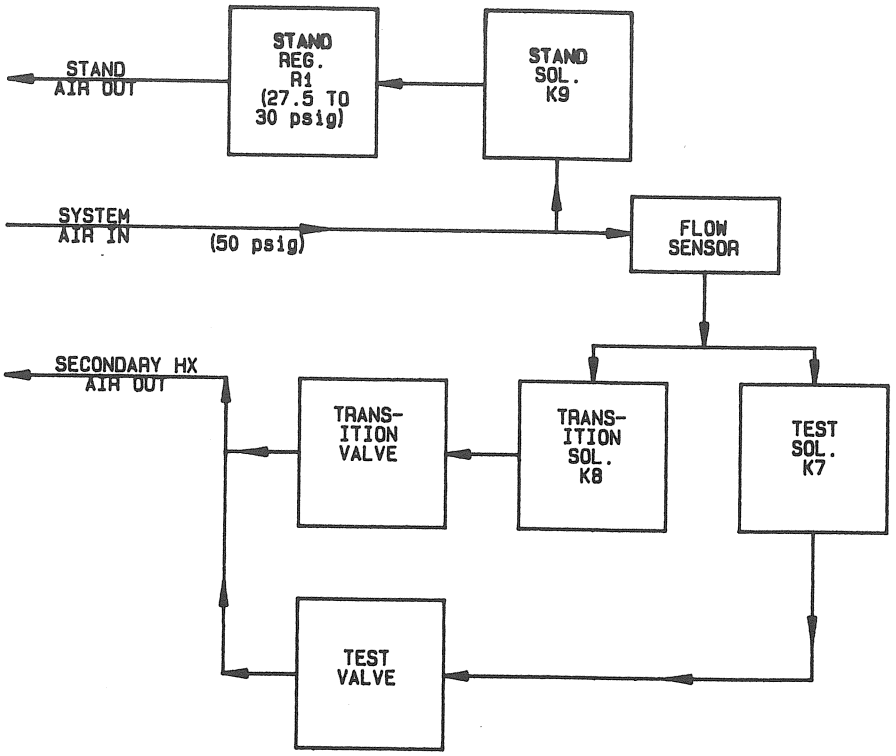

Figure 4-5 Pneumatic Diagram

4-3.3 Primary Heat Exchanger

The primary heat exchanger (WAND) located at the end of the suction line (distributed evaporator) assembly houses the heater used to condition the gas stream temperature to the desired temperature. It also supports the Thermal Cap and enclosures which interface to the tester and DUT, as well as delivers the gas stream to the TEST site.

Located in this assembly is a bi-metal temperature sensor, which senses the heater case temperature and opens the heater power circuit if the case temperature reaches 220°C. Also, in this assembly at the outlet of the heater, is a type "T" thermocouple junction which is the system's principle

temperature sensor or controlling sense input. The Thermal Cap and component enclosures, which provide the coupling to the tester and DUT, are attached to the outlet end of the WAND.

Figure 4-6 illustrates how this assembly functions. As shown, the gas enters the primary at one end and passes by a heater, then thermocouple, before exiting out the nozzle to the Thermal Cap.

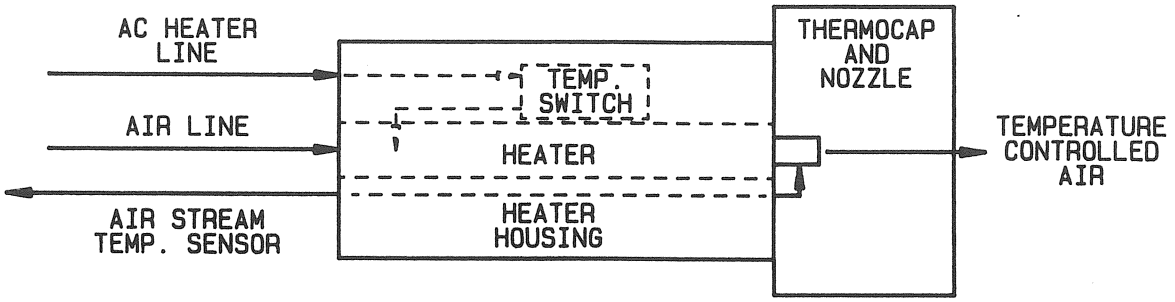

Figure 4-6. Primary Heat Exchanger.

4-3.4 Secondary Heat Exchanger

The secondary heat exchanger assembly is a cascade closed loop refrigeration system. It consist of a first stage refrigeration system and a second stage refrigeration system with a distributed evaporator.

When the power controller MODE SELECT switch is in the HEAT/COOL mode position, ac power is supplied to the first stage compressor after a 2 minute delay. After approximately 7 minutes as timed by the microprocessor controller, the second stage compressor will start. After another (1) minute delay, the WAIT lamp will extinguish and the READY lamp will glow steadily, indicating that the system is ready for operation.

The secondary heat exchanger cools the gas stream as it passes through the second stage distributed evaporator (SUCTION LINE ASSEMBLY) enroute to the primary heat exchanger.

The system may be changed from one mode to the other at any time, however, each change from HEAT ONLY to HEAT/COOL will initiate the 10 minute startup delay, during which time the system will not be available for use.

Figure 4-7 is a diagram of the operation of the cascade refrigeration system used in the TP0412A ThermoStream System. The first stage evaporator cools the second stage condenser. Two type "T" thermocouples have been mounted in this assembly to allow a service technician to monitor the first and second stage operations. The second stage evaporator does the actual cooling of the air as it travels to the primary heat exchanger. It should be noted that both stages have pressure gauges permanently installed. By monitoring these gauges, it is possible to determine the status of each stage.

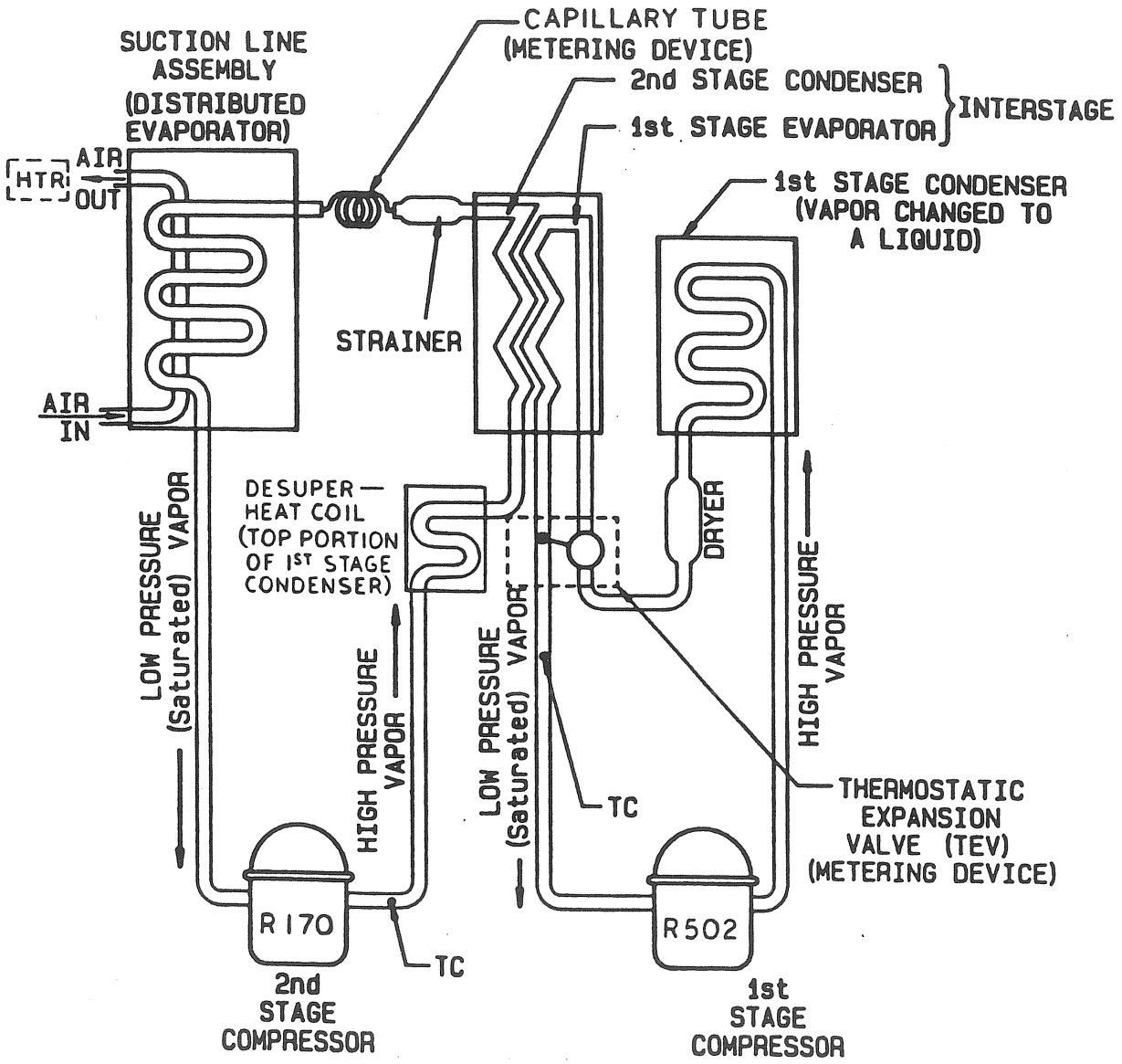

Figure 4-7. Cascade Refrigeration System.

SECTION 5
GENERAL MAINTENANCE

5-1 MAINTENANCE INTRODUCTION

The Temptronic Model TP0412A ThermoStream System has been designed and manufactured to withstand the rigors of constant use in most manufacturing environments. To ensure many hours of trouble-free service from this system, a minimum of routine servicing consistent with similar equipment should be performed on a regular basis. Refer to the warranty statement in Appendix A to determine user obligations and provisions.

This section contains the routine calibration and general maintenance procedures necessary to ensure continual, reliable system operation.

Though the procedures presented in this section are straight-forward, it is suggested that only authorized, trained technicians perform them.

If a malfunction is observed or suspected, refer to Section 6 for appropriate servicing procedures.

5-2 GENERAL MAINTENANCE

Combining a routine maintenance program with accepted operating practices which have been outlined previously in this manual and those accepted for similar TEST equipment, the system will require minimum servicing. The user should ensure that the system is being properly applied and that the insulating/interfacing are per recommendations to prevent undue stress on the system.

As in any good maintenance program operator education is a must to eliminate nuisance failures. It is recommended this manual be made available to the system operator(s) and both the start-up and shut-down procedures (see Appendix D) be located near the system for quick easy reference.

Provision for replacement parts should be made -- especially those items not readily available on site. The priority should be based on inconvenience caused if the system should fail. A parts list is provided in Section 6-5.

Inspection, (if not daily, at least weekly) should be made to ensure that neither stress nor wear is evident to the suction line assembly, that refrigeration balance pressures are normal, that interfacing at and around the TEST site is as originally installed, system input gas supply pressure is normal, refrigeration condenser is dust/dirt free, operation of any fans or motors is proper, system indicators functional, and system response (excursion) times are normal. If time permits, check system ultimate low temperature and compare results to earlier TEST.

The final component to this maintenance program, is an annual system checkout which adds microprocessor checkout procedure (Section 6-3), system functional checkout (Section 3-5), and calibration verifications (Section 5-3) to those inspections already mentioned. This usually necessitates removing the system from operation for a short period of time.

5-3 CALIBRATION INTRODUCTION

Calibration of the various circuits have been done by the manufacturer and should only require periodic verification or adjustment. The procedures presented here are the same as those performed at the factory and should be closely followed to ensure reliable results. As in any calibration it is important to use a known calibrated instrument as the standard.

5-3.1 Calibration of Digital Thermometer

The front panel temperature indicator is a self-contained type "T" thermocouple digital thermometer (DTM) with its own built in adjustment controls. Two separate calibration procedures are presented here, allowing the user to determine which is more convenient. The same results are achieved with either method.

5-3.1.1 Equipment Required

1. Analogic AN6520-8A Digi-Cal II* or equivalent.
2. Digital voltmeter (DVM) with 4½ digit read-out.

5-3.1.2 Calibration Procedures With Analogic AN6520-8A Digi-Cal II

1. Turn off power to the microprocessor controller. Remove controller from cabinet and top cover screen.
2. Remove the digital thermometer from the front panel.

Note: Place tape over openings on both sides of DTM case to prevent hardware from falling into case.

3. Connect the Analogic Digi-Cal II to the digital thermometer input terminals. This can be easily done by simply connecting the Digi-Cal II output to the TC input connector at the rear of the micro processor controller. Use "T" type thermocouples and ensure that the proper polarity is observed.
4. Connect the DVM to the DTM analog out screw terminals located on the right side of the lower PCB protruding from rear of DTM.
5. Lift out the optical filter if present. Locate the 2 calibration controls on the front edge of the upper PCB just above the display. The lefthand control adjust the "HIGH" reading and the righthand control adjust the "LOW" setting see Figure 5-1.

Note; The potentiometer located at the lower right of the display is used to adjust the meter linearization. This is done by the meter manufacturer and should never be adjusted by the user.

---

*If an Analogic AN6520-8A Digi-Cal II is not available and a millivolt reference standard is used instead, follow the procedures of Section 5-3.1.3.

6. Turn on microprocessor controller and allow 45 minutes of warm up time before proceeding.
7. Switch on the Digi-Cal II and set its output at +0.0°C. This is the low calibration point for the digital thermometer.

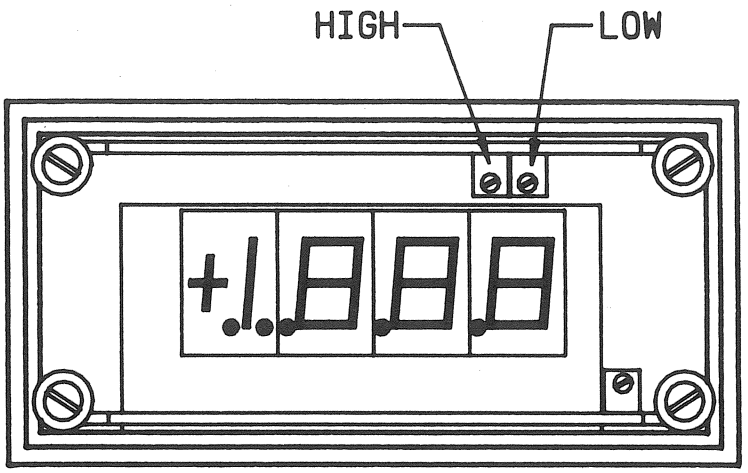

Figure 5-1. Calibration adjustment potentiometers for digital thermometer.

8. Adjust the "LOW" calibration control of the digital thermometer (Figure 5-1) to obtain a temperature display of +000°C and an analog measurement of +0.0 millivolts.
9. Set the Digi-Cal II output at +180.0°C. This is the high calibration point for the digital thermometer.
10. Adjust the "HIGH" calibration control of the digital thermometer (Figure 5-1) to obtain a temperature display of +180°C and an analog measurement of +1800 millivolts.
11. By repeating steps 5 through 10, verify the calibration of the digital thermometer.
12. Disconnect the Digi-Cal II, the thermocouple wire, and DVM from the digital thermometer.
13. Connect the microprocessor controller thermocouple to the digital thermometer.

14. Reinstall the digital thermometer optical filter.
15. Reassemble controller and reconnect for use.

5-3.1.3 Calibration Procedures With Millivolt Reference Standard

1. Prepare a calibration system as shown in Figure 5-2 by following the procedures given in steps 2 through 8 below.

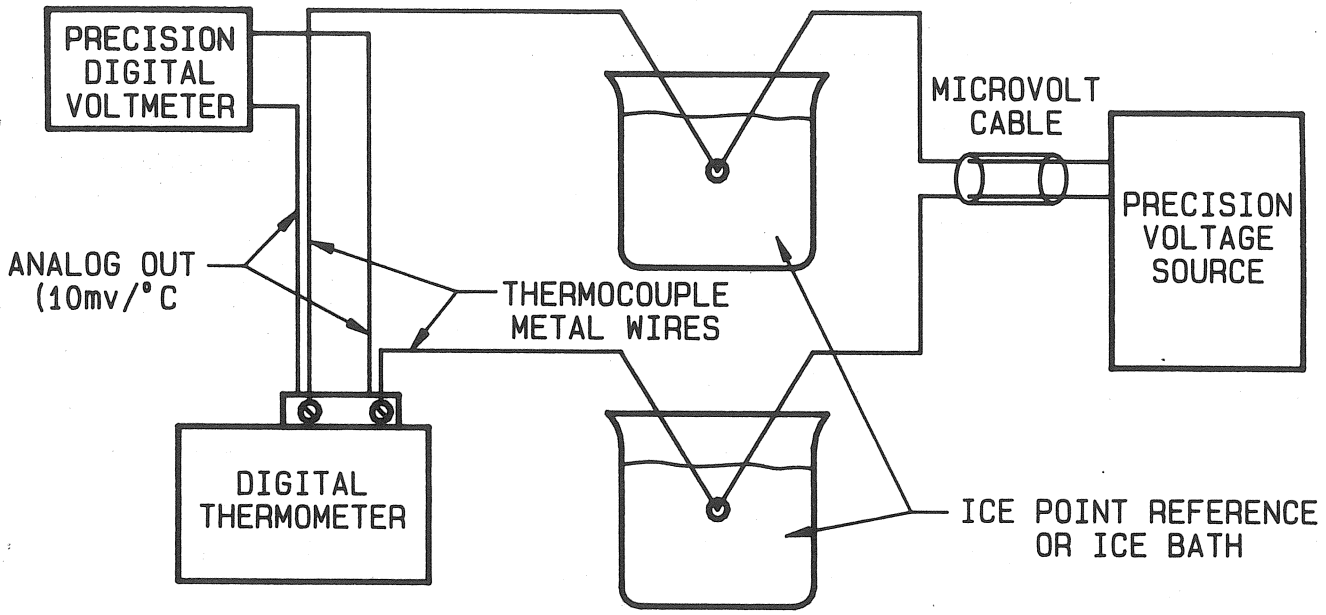

Figure 5-2. Setup for calibration of digital thermometer.

2. Turn power off, remove controller from cabinet, remove cover screen, and remove DTM from front panel to remove filter concealing adjustment potentiometers.
3. Select the thermocouple wire corresponding to the metals of the designated thermocouple, and prepare a TEST cable of not more than three feet in length.
4. Connect one end of the TEST cable to the digital thermometer, being careful to connect the "red" lead to the negative terminal of the digital thermometer.

5. Braze the other ends of the TEST cable to copper leads, forming two thermocouple junctions. Cover each junction with a piece of heat-shrink tubing or other waterproofing material.
6. Connect the copper leads to a TEST voltage generator.
7. Immerse each TEST cable thermocouple junction into a bath of water. Maintain the water at a measured 0°C by keeping fresh-water ice cubes in the water bath.
8. Connect the digital thermometer output screw terminals to a precision digital voltmeter, being careful to observe the polarity conventions shown in Figure 5-2 (Page 5-5).
9. Lift out the front optical filter of the digital thermometer, thereby providing access to the calibration adjustment poteniometers shown in Figure 5-1 (Page 5-4).

Note: The potentiometer located at the lower right of the display. It is used to adjust the meter linearization, which is done by the meter manufacturer and should never be adjusted by the user.

10. Turn power on allow 45 minutes for meter to warm up.
11. Set voltage standard output to ±000 microvolts. Polarity (+/-) will flash.
12. Adjust the LO calibration poteniometer, see Figure 5-1 (Page 5-4) to display ±000°C. Polarity (+/-) will flash.
13. Set voltage standard output to +8235 microvolts.
14. Adjust the HI calibration poteniometer, see Figure 5-1 (Page 5-4 to display +180°C on the digital thermometer and obtain +180°C millivolts on the digital voltmeter. The display will flash.
15. Repeat steps 11 through 14 until no further adjustment is necessary.
16. Use the following chart to check other points.

Temperature	Microvolt
-70°C	-2475
-55°C	-1987
+125°C	+5469
+200°C	+9286

17. Turn power off.
18. Disconnect the TEST cable and the analog output TEST cable.
19. Snap the flexible optical filter back in place on the front of the digital thermometer and reassemble controller.
20. Reconnect the system for use.

5-3.1.4 Digital Thermometer Specifications

Thermocouple	Type "T"
Read-Out Accuracy	±½ digit at 25°C
Temperature Resolution	1°C
Power	5vdc
Type	Seven-segment LED, red, 0.43 in. (11 mm) high
Polarity Indication	Automatic "+" or "-" sign displayed
Overrange Indication	All digits blanked to prevent erroneous read-out; "+" or "-" sign remains on
Operating Temperature Range	-10°C to +50°C

5-3.2 Analog Input Section Calibration

The TP0412A ThermoStream System does not require a system calibration. However, some offset or compensation is required for the analog input section (front end) of the microprocessor control board. Before performing the following procedure verify, the DTM calibration as outlined in Section 5-3.1.2.

5-3.2.1 Equipment Required

Alignment tool
Screwdrivers

5-3.2.2 Calibration Procedure

1. Turn system power off.
2. Remove all connections at rear of microprocessor controller.
3. Remove and save four (4) screws securing the front panel to the cabinet.
4. Remove microprocessor controller from cabinet and remove top cover screen.
5. Make power cord and control cable connections at rear of microprocessor controller.
6. Ensure all power controller connections.
7. Turn system power on, observing start-up procedure outlined in Section 3-6.
8. Allow system to operate for 30 minutes.
9. To gain access to the microprocessor calibration function, select the TEMPERATURE SET switch located in the yellow band of the rainbow and set -990. Observe that the OUT OF RANGE lamp lights and the "AT TEMP" indicator begins flashing.
10. While depressing the FLOW switch, momentarily depress the RESET switch, then release both switches.
11. Select any TEMPERATURE SET switch and set +000°C and depress the FLOW switch to initiate flow.

12. The system will stabilize at some point which can be determined when the AT TEMP indicator glows steadily. Allow 5 minutes for stabilization before making any adjustments.
13. Refer to page 5-10 (drawing D4088 5 of 5) to locate the zero adjustment potentiometer R20. Gradually adjust R20 until the DTM display corresponds to the set temperature. Rotating R20 clockwise (CW) request more heat and counter-clockwise (CCW) more cooling.

NOTE

During this process observe the EXT, MTA and MLA indicators. The MTA indicator glows steadily when at a control point and the EXT indicator lights when heat is required and the MLA indicator lights when cooling is required. Proper cal adjustment would have the DTM display correspond to the SET TEMPERATURE and the MTA indicator on with the EXT and MLA indicators occasionally flashing equally.

14. Set +200°C and once again allow the system to stabilize at some point. Again allow 5 minutes to ensure stabilization.
15. Refer to page 5-10 (drawing D4088 5 of 5) to locate the span adjustment poteniometer R17. Gradually adjust R17 until the DTM display corresponds to the set temperature. Rotate R17 CW to request more heat and CCW more cooling.
16. Set +000°C again and allow the system to stabilize. This time the DTM should indicate the set temperature. If not repeat steps 13 through 16.
17. Select any temperature (preferably the desired TEST temperatures) within the system operating range to observe any discrepancies.
18. Turn system off.
19. Disconnect cables at rear of microprocessor controller.
20. Reinstall cover screen and slide controller back into cabinet and secure with mounting hardware.
21. Remate cabling connections. System is now available for desired testing.

5-3.3 Flow Circuit Calibration

The mass flow sense circuit is located in the power controller. This circuit was adjusted at the factory and should only require periodic verification.

When calibrating the flow circuit, it is important to ensure that flow is ONLY indicated when there is flow. If this circuit is improperly calibrated such that a false flow indication is given during the power-up sequence before the purge cycle is initiated, the microprocessor will interpret this condition as loss of control and will put the system in a non-operating condition. A lamp pattern will be displayed on the front panel, see page 3-19. The corrective action is to calibrate the flow circuit per the following procedure.

Two separate calibration procedures are presented here allowing the user to determine which is more convenient. The results are the same.

5-3.3.1 Equipment Required

Dwyer Flow Gauge (Dwyer P/N RMC 106) - reference Section 5-3.3.2
Sierra Flow Meter (P/N MFM-1-1411214-11-442-12-1) - reference Section 5-3.3.3

5-3.3.2 Calibration Procedure (using Dwyer Flow Gauge)

1. Turn the system off, unplug system power and shut air source off.
2. Remove four (4) screws securing the power controller in the secondary heat exchanger cabinet. Pull the power controller forward about 6" and remove access panel in top cover to expose the calibration potentiometers, see Figure 5-3.
3. Disconnect the primary heat exchanger air out and secondary heat exchanger power connections.

4. Attach the Dwyer flow gauge to the primary heat exchanger out port. It should be noted that this gauge is incremented in standard cubic feet per hour (SCFH) yet the TP0412A ThermoStream System requires standard cubic feet per minute (SCFM). A simple formula of multiplying the desired system flow rate by 60m/hr will result in the proper Dwyer flow gauge reading. For example, 3SCFM x 60m/hr = 180SCFH which can now be indicated on the Dwyer flow gauge. Now mark the flow gauge for the equivalents of 2, 3, 6, 10, and 12 SCFM.
5. Depress system power switch, turn on air supply, and regulate air pressure to 50 psig. Air should be exhausting to the ambient from the Dwyer flow gauge.
6. Adjust the operating flow control valve (should be Transition) full counter clockwise (CCW). This ensures there is no restriction to the air flow.
7. Locate the FLOW Adjusting Potentiometer (reference Figure 5-3) on the flow circuit board in the power controller.

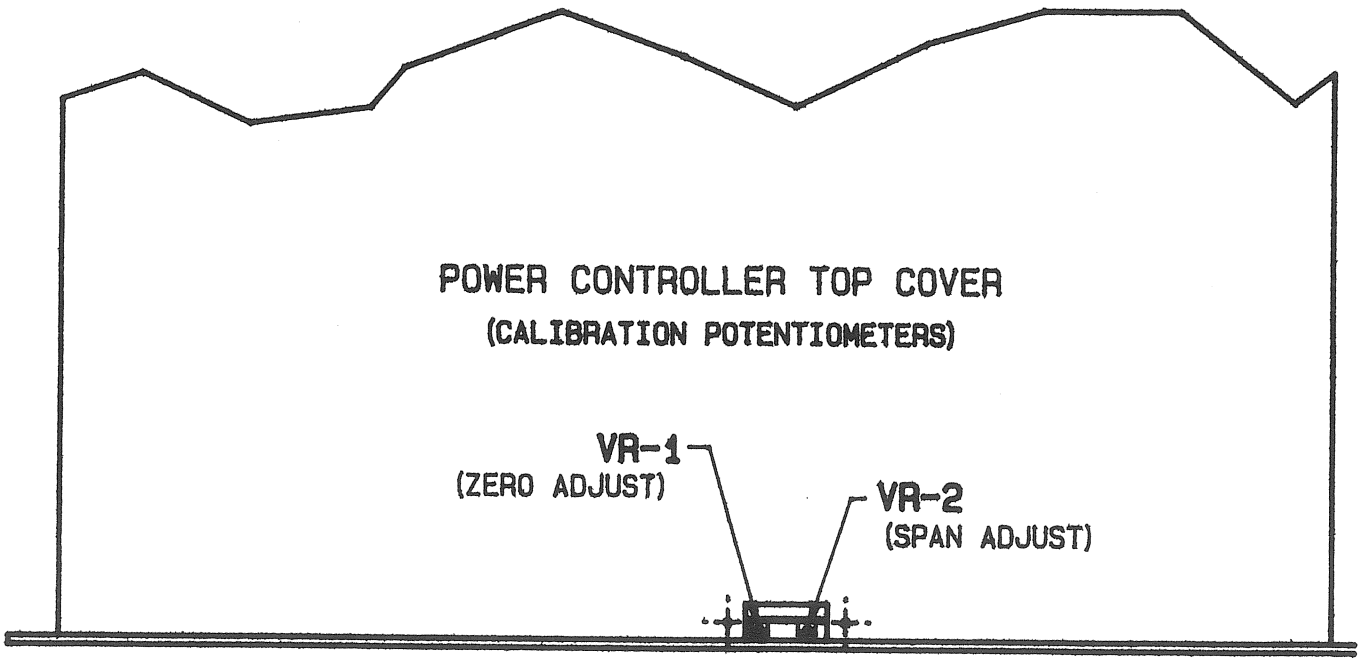

Figure 5-3. FLOW Adjustment Potentiometers' Location.

8. Now adjust the gas flow until the Dwyer flow gauge indicates 3SCFM. Then adjust the zero potentiometer (VR1 - left) until the flow meter LEDs indicate 3SCFM.
9. Next adjust the gas flow until the Dwyer flow gauge indicates 10SCFM. Then adjust the span potentiometer (VR2 - right) until the flow meter LEDs indicate 10SCFM.
10. Verify 3, 6, and 12SCFM flow rates now. Repeat the above steps if the results are not as expected.
11. After satisfactorily completing this procedure, shut the system off, disconnect all connections, secure power controller in the secondary heat exchanger cabinet, and properly reconnect the system to prepare it for operation.

5-3.3.3 Calibration Procedure (using Sierra Flow Meter)

1. Turn the system off, disconnect system power cord and shut off air source.
2. Disconnect the air hose attached to the AIR OUT port on the rear of the POWER CONTROLLER.
3. Attach the Sierra Flow Meter input to the AIR OUT port.
4. Connect the hose previously disconnected in Step 2 to the output of the Sierra Meter. The Sierra Meter should now be connected in series with the air flow.
5. Remove (4) screws securing the POOWER CONTROLLER in the SECONDARY HEAT EXCHANGER cabinet. Pull the POWER CONTROLLER forward about 6" and remove the access panel in the top cover, see Figure 5-3, to expose the calibration poteniometers.
6. Reconnect power cord, turn air source on and place the MODE select switch to the HEAT ONLY position.
7. Depress the POWER switch, regulate system input air pressure to 50psig., set functioning TEMPERATURE SET switch to -100°C and wait for a"READY" indication.

8. Adjust the TRANSITION valve full counter clockwise (CCW) to ensure no restrictions.
9. Depress the FLOW switch.
10. Now adjust the TRANSITION valve until the Sierra Meter indicates 3SCFM.
11. Adjust the zero poteniometer (VR1 - left) until the system FLOW METER on the POWER CONTROLLER front panel indicates 3SCFM.
12. Next adjust the TRANSITION valve until the Sierra Meter indicates 10SCFM.
13. Adjust the span potentiometer (VR2 - right) until the system FLOW METER indicates 10SCFM.
14. By adjusting the TRANSITION valve check 3, 6 and 12SCFM flow rates. Repeat Steps 10 through 13 if results are not as expected.
15. When results are satisfactory shut the system off, turn off air supply, disconnect Sierra Meter, install access cover, secure POWER CONTROLLER in the SECONDARY HEAT EXCHANGER cabinet and properly reconnect the air hose to the AIR OUT port to prepare the system for normal operation.

This completes the flow circuit calibration. Any further flow adjustments should be made using the flow valves on the power controller front panel. Whenever a flow problem is suspected, always verify the system gas supply input pressure to ensure it is properly regulated.

5-3.4 DUT Calibration

When the DUT option is supplied with the TP0412A ThermoStream^{R} system all necessary calibration has been performed. If this option was purchased separately, the temperature meter has already been calibrated per the procedure in Section 5-3.1 the user must however calibrate the microprocessor control circuit to this option during installation.

5-3.4.1 Equipment Required

1 TP0412A ThermoStream® System (calibrated)
1 12" X 12" X ½" silicon rubber sheet (ZZ00710) supplied with system
1 DUT console (TP0412 option) with calibrated DTM
1 ThermoCap (TP0412 option) assembly, size is dependent upon device to be tested
1 Shroud (supplied with ThermoCap) size dependent upon device to be tested

The following items are to be supplied by the user:

1 Sample device (DUT) to be tested
1 Modified test socket with thermocouple (2 thermocouple kits are supplied, see Sections B-10.2, B-10.4.1 & B-10.4.2)
1 Calibration alignment tool
1 Screwdrivers (common & #2 philips)

5-3.4.2 Calibration Set-Up

1. Mount DUT in socket fixture ensuring good mechanical and thermal coupling of the thermocouple to the DUT.

2. Remove microprocessor temperature controller cabinet and cover screen. Reference Figure B-10.2 "DUT Console/Microprocessor Interconnections".

3. Verify all system interconnections as outlined in Section 3-2 of the system manual.

4. Plug the test socket device thermocouple into the DUT console front panel.

5. Set the SYSTEM MODE select switch, located in the POWER CONTROLLER, for HEAT/COOL operation. Power on the system.

6. After obtaining the READY indication, set +25°C using the active TEMPERATURE SET switch.

7. Place the stand head/ThermoCap assembly in the down position over the calibration test fixture (reference Figure B-10.3) and depress the FLOW switch.

8. Wait for the TEST/AT TEMP indication. Observe air flow rate as indicated by the FLOW METER and adjust, if necessary, the TEST FLOW valve, located in the POWER CONTROLLER, until 10SCFM is achieved.

9. Set -85°C using the active TEMPERATURE SET switch. Observe air flow rate as indicated by the FLOW METER and adjust, if necessary, the TRANSITION FLOW valve, located in the POWER CONTROLLER, until 10SCFM is achieved.

5-3.4.3 DUT Calibration Procedure

1. Remove, if not already done so, the microprocessor controller cabinet and cover screen.

2. Center R7 and R12 on the main CPU board, see Drawing D4088 (page 5-10) by first turning them full CCW then turning CW 10 complete turns.

3. Put the microprocessor in the calibration mode by first setting -990 using the TEMPERATURE SET switch located in the yellow band of the rainbow. While depressing the FLOW switch, momentarily depress the RESET switch, then release both switches.

4. Verify that the DUT indicator located on the DUT console front panel is lit. If not, depress the DUT/SYSTEM select switch. This will place the system under DUT control. DUT temperature will be displayed on DUT meter and ThermoStream® temperature will be displayed on microprocessor meter.

5. If NO FLOW condition exists, initiate air flow by depressing the FLOW switch.

6. Set +000°C using the TEMPERATURE SET switch (middle switch if 5 switch option is installed) and allow the DUT temperature to stabilize for five (15) minutes after reaching AT TEMP before making any adjustments.

7. Adjust R12 on the main CPU board until DUT temperature meter indicates +000°C. After making an adjustment, allow 60 seconds for the DUT to stabilize again.

8. Set +195°C, using the same TEMPERATURE SET switch and allow the DUT temperature to stabilize for five (15) minutes after reaching AT TEMP before making any adjustments.

9. Adjust R7 on the main CPU board until DUT temperature meter indicates +195°C. After making an adjustment, allow 60 seconds for the DUT to stabilize again.

10. Repeat steps 5 through 9 until no error (±000°C) is observed at either +000°C or +195°C settings.

11. The calibration is now complete. Reinstall the cover screen and cabinet.

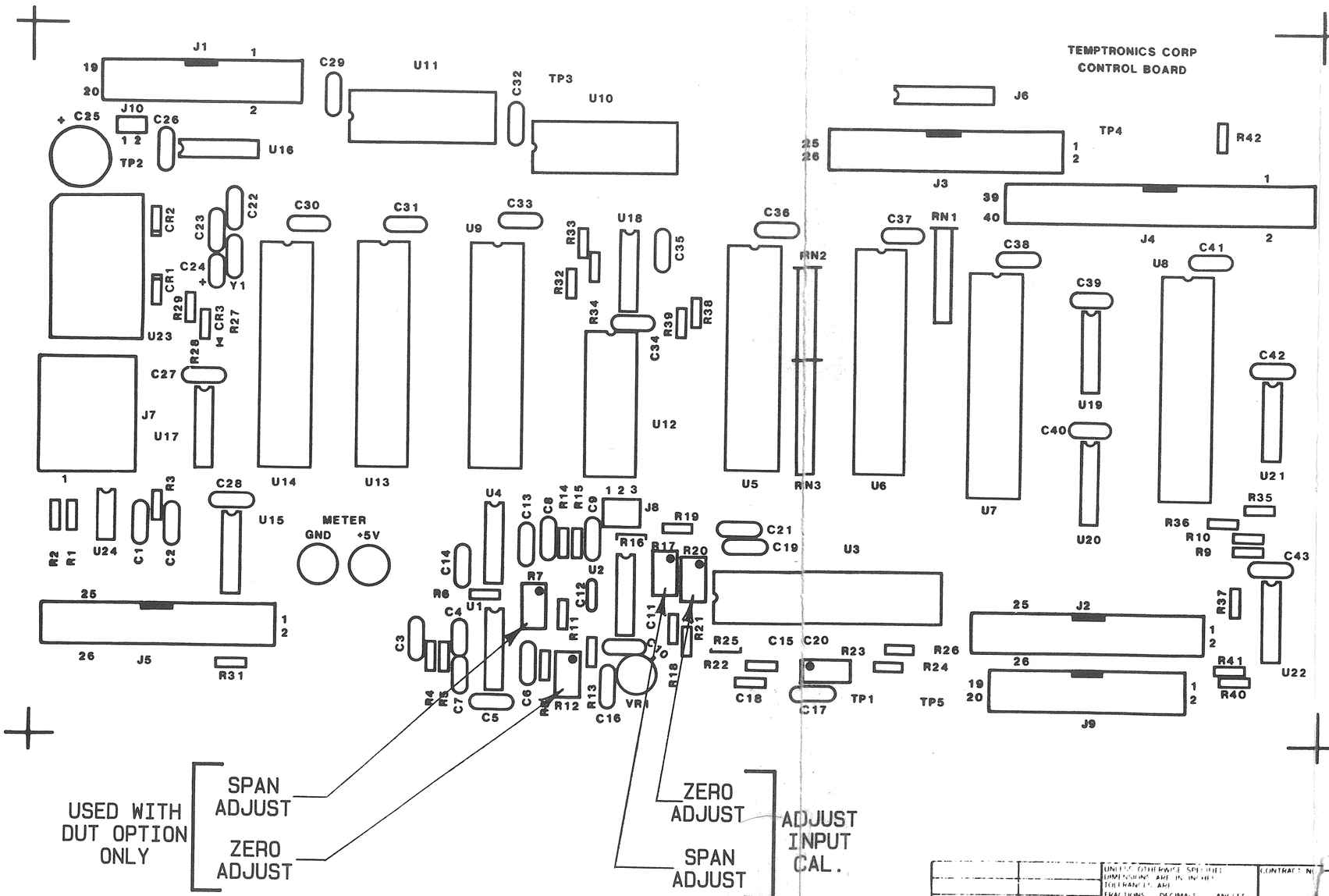

LMS1400	Section 7	UNLESS OTHERWISE SPECIFIED DIMENSIONS ARE IN INCHES TOLERANCES ARE FRACTIONS DECIMALS ANGLES XX XXX	CONTRACT NO	TEMPTRONIC
LMS1380	Section 5	MATERIAL	DRAWN M.	SILK SCREEN ARTWORK (COMP. SIDE)
LMS1170	App. 8-10		CHECKED	MAIN CONTROL BRD.
	TT-112A	FINISH	UNLESS OTHERWISE SPECIFIED RESISTANCE VALUES ARE OHMS % WATT CAPACITANCE VALUES ARE IN % VOLTS	SIZE D · CODE IDENT NO · DRAWING NO 4088 · REV A
NEXT ASSY	USED ON			SCALE 2:1 · SHEET 5 OF 5
APPLICATION		DO NOT SCALE DRAWING		

SECTION 6
SERVICE INFORMATION

6-1 SERVICE INFORMATION

The Model TP0412A ThermoStream System is a trouble-free system requiring only routine maintenance as outlined in Section 5. However, as is the case with any equipment, it is possible that there will be instances during the system life time which may require more than general maintenance.

It is requested that the User call Temptronic Service Department directly and describe the malfunction experienced.

For service related issues contact Service as follows:

Telephone;
1-800-558-5080 Customers outside Massachusetts
1-(617)-965-4145 Customers within Massachusetts

Note: These numbers are designated Service lines ONLY and cannot be transfered to any other Departments within Temptronic. The Corporate main number remains unchanged and should be used for all non-service related calls.

1-(617)-969-2501

Telex Number;
211938; answer back SERVSUR

The diagnostics and procedures presented in this section, are intended to assist in determining sources of problems and possible solutions. Only qualified technicians should perform these procedures.

6-1.1 Warranty

The Model TP0412A ThermoStream System is warranted for a period of one year upon delivery to the original purchaser. A copy of the Warranty is provided in Appendix A.

6-2 TROUBLESHOOTING

For the benefit of those users who are qualified to perform in-depth circuit board analysis and component replacement, a complete set of schematic, logic, and wiring diagrams has been included in Section 7 of this manual.

As an aid to troubleshooting, possible malfunctions and recommended corrective actions are listed in Table 6-1. This table is intended to assist in determining cause of fault should the system malfunction. Should the indicated TEST procedure be unclear, DO NOT proceed with the TEST. Contact Temptronic Service Department for additional assistance.

Table 6-1. System troubleshooting procedures.

Condition	Probable Cause	Verification/Remedy
System does not power up	POWER cord not connected	Connect POWER cord
	Fuse blown/missing from microprocessor controller or MAIN CIRCUIT BREAKER tripped	Replace fuse or reset circuit breaker. Try to determine cause for either device to be activated.
	Interconnecting cables improperly installed or missing	Check cables for proper installation
System will not heat	System in "WAIT" mode	Check STATUS indicator
	No gas flow	Check gas FLOW indicator
	System in OVERHEAT	Check OVERHEAT indicator (depress OVERHEAT RESET)
	Thermal Cutout switch defective	Check switch for open
	Defective heater	Check heater resistance (2100w heater - 18 ohms, 1800w heater - 25 ohms)

Condition	Probable Cause	Verification/Remedy
No gas flow	System gas source turned off	Turn on system gas supply
	FLOW switch not depressed after RESET switch was depressed	Depress FLOW switch
	Either or both flow channel control valves fully closed	Open flow channel control valves
Heater control circuit inoperative	Defective SSR (K4) in power controller	Check K4 for proper operation
	Control line open circuited	Verify control lines in system control cable
	No output from microprocessor controller	Initiate internal diagnostics (Section 6-3)
System does not indicate temperature. Display will indicate a high negative value (ie -400)	Open thermocouple junction	Short thermocouple input to microprocessor controller (meter should indicate ambient). Check all connectors and cables for opens.
	Defective temperature meter	Verify thermocouple input to meter (replace meter)
Temperature meter does not change as temperature changes (display fixed at some value usually ambient)	Thermocouple input shorted between sensing junction and meter input	Check each thermocouple connector and cable for short
Temperature meter does not indicate actual temperature	Meter out of calibration	Perform meter calibration procedure (Section 5-3.1)

Condition	Probable Cause	Verification/Remedy
System powers up but does not respond to TEMPERATURE SET pushbutton switches	Temperature set module not plugged in	Verify TEMPERATURE SET switch module connections
System does not control at set temperature	System out of calibration	Perform system calibration outlined in Section 5-3.2
System will not cool below ambient	MODE switch in the HEAT ONLY position	Place MODE switch in the HEAT/COOL position
	Secondary heat exchanger defective	Check refrigeration pressure gauges to determine if either or both stages are operating
System heats and/or cools but never reaches system limits (-70°C/+205°C)	Excessive air/gas flow	Verify input air/gas supply is regulated to 50psig.
System heats and/or cools but never reaches system limits (-70°C/+205°C) in conjuction with an OUT-OF-RANGE indication	Either one or both of the -984 and -985 routines have been initiated	To clear the routines, simply power down and power up.

6-2.1 Failure Conditions At Start-Up

The following error conditions are possible prior to the 90 second purge cycle. (Refer to Section 3)

CONDITION	OVER HEAT INDICATOR	NO FLOW INDICATOR	OUT OF RANGE INDICATOR
J1-P8, J1-P13 & J1-P17 not at logic zero (0)	OFF	OFF	ON
Safety return reads safe when it should read unsafe	OFF	ON	OFF
Flow detected when valves should be closed. (Bar graph LED(s) usually lit also)	OFF	ON	ON
ROM U6 checksum error	OFF	ON	OFF
ROM U13 checksum error	OFF	ON	ON
ROM U8 checksum error	ON	OFF	OFF

NOTE

These tests are made in the sequence as listed. If any of the conditions are observed, power down the system then apply power again. If condition persist contact the factory.

6-3 MICROPROCESSOR CONTROLLER CHECK-OUT PROCEDURES

The microprocessor has been programmed to perform several internal diagnostic routines. Before any routine may be initialized, the system must be operating under front panel control. Each routine has been assigned a code which the operator must input using the TEMPERATURE SET switch (command control switch) located in the yellow band of the rainbow. In most cases, some of the microprocessor controller front panel indicator lamps are used to indicate pass or fail condition.

The following list shows the codes for each routine and gives a brief explanation of the function. The implementation for each routine is given in subsequent sections.

CODE	Function
-990	Used to put system into calibration mode. Refer to Section 5-3.2.2 step 10. This is the only diagnostic function which allows the system to continue to control temperature.
-991	RAM TEST.
-992	Used to TEST each bit from each segment of the TEMPERATURE SET switch(s).
-993	Checks A/D low byte. (20 counts/°C)
-994	Verifies system measurement of ac power line frequency.
-995*	Test all microprocessor controller front panel lamps.
-996**	No function
-997**	Reads the IEEE-488 address switch setting
-998*	Checks BCD input and output lines.
-999	No function

* ** Codes not assigned a function at this time.
Codes dedicated to options. Routine is provided with option.

6-3.1 -990 Routine

This routine implements the calibration mode for adjustment to the analog input section of the microprocessor main printed circuit board. This is used to calibrate either the air/gas control loop or the device control loop, depending on which control is enabled (air/device). Refer to Section 5-3.2.2 for the procedure to initialize this routine and the complete calibration procedure.

6-3.2 -991 Routine

This routine is used to TEST the RAM, by checking ram 0 and ram 1. The indicators used are; OUT OF RANGE (RAM-U5), and NO FLOW (RAM-U7).

To implement perform the follow steps:

1. Select the TEMPERATURE SET switch located in the yellow band of the rainbow and set for -991.
2. Depress and hold the FLOW switch while momentarily depressing the RESET switch then release both switches.
3. Observe that first the OUT OF RANGE then NO FLOW indicators flash. This will continue until the routine is interrupted.
4. If an indicator stays lit, a problem exists with the indicated device and it must be replaced.
5. Depress RESET to cancel routine and return to normal function.

6-3.3 -992 Routine

This routine TEST each bit of each TEMPERATURE SET switch(s) segment. The EXT, MTA, MLA, OVERHEAT, NO FLOW, and OUT OF RANGE indicators are used for this TEST as follow;

6-3.3.1 Segment Selected

The EXT and MTA lamps indicate which segment is being tested.

1. When neither are lit the units segment is being tested.
2. When MTA only is lit the tens segment is under TEST.
3. When EXT only is lit the hundreds segment is being tested.
4. When EXT and MTA are lit the polarity segment is under TEST.

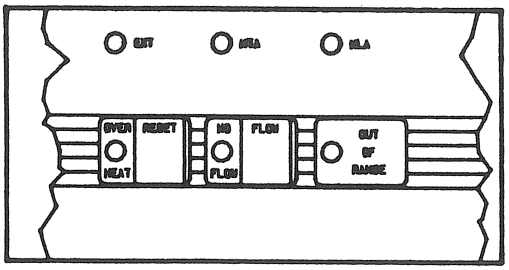

UNITS SEGMENT
(No Indicators)

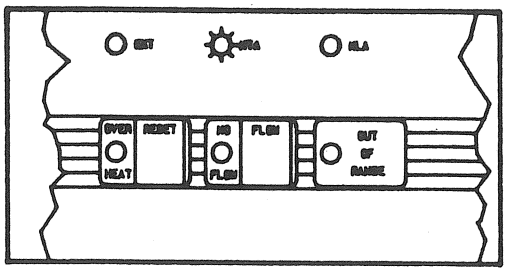

TENS SEGMENT

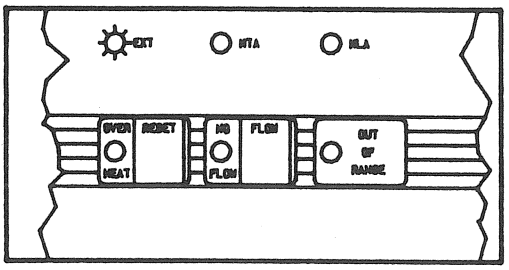

HUNDREDS SEGMENT

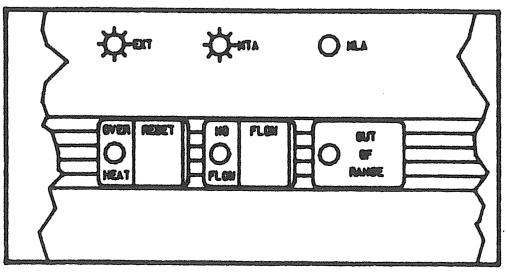

POLARITY SEGMENT

6-3.3.2 BCD Display

The MLA, OVERHEAT, NO FLOW, and OUT OF RANGE indicators, when lit, have been assigned the following BCD values;

1. OUT OF RANGE.....BCD 1 (LSB)
2. NO FLOW.....BCD 2
3. OVERHEAT.....BCD 4
4. MLA.....BCD 8 (MSB)

Thus, if the 5 digit was showing in the segment under TEST, both the OVERHEAT (BCD 4) and OUT OF RANGE (BCD 1) indicators would be lit.

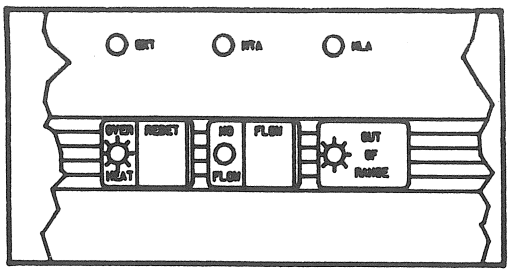

BCD DISPLAY

When testing the polarity segment, the OUT OF RANGE indicator should light when a negative (-) sign is showing and go out when a positive (+) sign is showing.

To initiate the TEMPERATURE SET switch routine simply;

1. Select the TEMPERATURE SET switch located in the yellow band of the rainbow and set for -992.
2. Depress and hold the FLOW switch while momentarily depressing the RESET switch then release both switches.
3. Select TEMPERATURE SET switch to be tested.
4. Continue to depress and release the FLOW switch until the desired switch segment to be tested is selected.
5. Inturn, select and verify each digit in the segment by observing the lamps.
6. Depress RESET to cancel routine and return to normal function.

In the event the expected result is not observed, then a problem exists requiring further testing.

1. Check all cabling/connections from the TEMPERATURE SET switch to the main PCB.
2. Refer to appropriate switch select board schematic to verify operation.
3. Because of its complex assembly, the TEMP SET switch module is intended to be replaced as a complete assembly.

6-3.4 -993 Routine

This routine, in conjunction with a thermocouple simulator, allows verification of meter, analog section and A/D converter. 1 BCD count = 1/20°C.

The front panel indicators EXT, MTA, MLA, OVERHEAT, NO FLOW, and OUT OF RANGE when lit, have been assigned the following BCD values;

1. OUT OF RANGE.....BCD 1 (LSD)
2. NO FLOW.....BCD 2
3. OVERHEAT.....BCD 4
4. MLA.....BCD 8
5. MTA.....BCD 16
6. EXT.....BCD 32 (MSD)

To initiate this routine simply;

1. Select the TEMPERATURE SET switch located in the yellow band of the rainbow and set for -993.
2. Depress and hold the FLOW switch while momentarily depressing the RESET switch then release both switches.
3. Observe lamps while adjusting the simulator setting 1°C to verify proper system operation.
4. Depress RESET to cancel routine and return to normal function.

6-3.5 -994 Routine

This routine allows the microprocessor to measure the ac power line frequency.

The OVERHEAT, NO FLOW, and OUT OF RANGE indicators, when lit, have been assigned the following values;

1. OUT OF RANGE.....BCD 1
2. NO FLOW.....BCD 2
3. OVERHEAT.....BCD 4

To initiate this routine simply;

1. Select the TEMPERATURE SET switch located in the yellow band of the rainbow and set for -994.
2. Depress and hold the FLOW switch while momentarily depressing the RESET switch then release both switches.
3. Depress RESET to cancel routine and return to normal function.

Thus, if both the NO FLOW and OVERHEAT indicators are lit, showing a 6, the line frequency would be 60 hz..

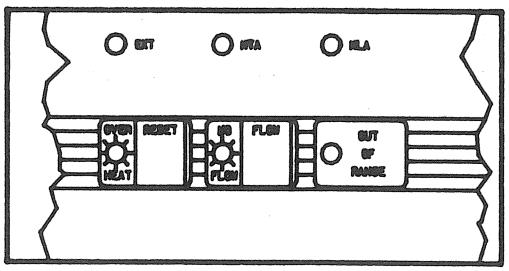

60 CYCLE

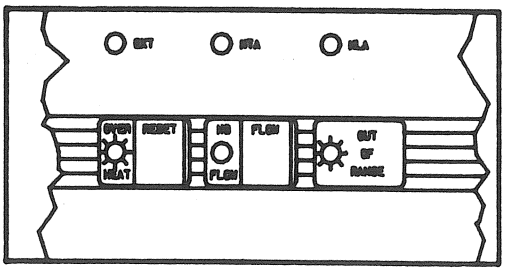

50 CYCLE

6-3.6 -995 Routine

This routine allows simultaneous testing of all the microprocessor controller front panel lamps.

To initiate this routine simply;

1. Select the TEMPERATURE SET switch located in the yellow band of the rainbow and set for -995.
2. Depress and hold the FLOW switch while momentarily depressing the RESET switch then release both switches.
3. Observe that all lamps begin flashing simultaneously and will continue to do so until routine is interrupted.
4. Should any lamp fail to function, refer to appropriate schematic to verify lamp electrical connections and operation.
5. Depress RESET to cancel routine and return to normal function.

6-3.7 -996 Routine

This routine is not present in the software of a TP0412A.

6-3.8 -997 and -998 Routines

These routines are dedicated to testing various conditions associated with either the IEEE-488 or BCD options. If the system has not been configured with either option, the routines will initiate no action.

6-3.9 -997 Routine

This routine will display the address switch setting (switches 1 through 6) located on the microprocessor controller rear panel.

The microprocessor reads the address switch setting during the power up sequence. To enter a new address after power on change the switch setting to the appropriate setting then depress the RESET switch.

The front panel indicators EXT, MTA, MLA, OVERHEAT, NO FLOW, and OUT OF RANGE when lit, indicating an "on" condition, have been assigned the following values;

	INDICATOR		BCD VALUE
switch 1	OUT OF RANGE	IEEE-488 address bit 0 (LSB)	1
switch 2	NO FLOW	IEEE-488 address bit 1	2
switch 3	OVERHEAT	IEEE-488 address bit 2	4
switch 4	MLA	IEEE-488 address bit 3	8
switch 5	MTA	IEEE-488 address bit 4 (MSB)	16
switch 6	EXT	Power on mask	32

NOTE: If all switches are in the "off" position or if only switch 7 is in the "on" position, all indicators will be "off".

To initiate this routine simply;

1. Select the TEMPERATURE SET switch located in the yellow band of the rainbow and set for -997.
2. Depress and hold the FLOW switch while momentarily depressing the RESET switch then release both switches.
3. Observe lamps to verify switch setting. If the results were not as expected visually check address switch for proper switch positions. Reset switch.
4. Depress RESET to cancel routine and return to normal function.

6-3.10 -998 Routine

This diagnostic routine is supplied as part of the BCD option. When implemented, both the input and output lines associated with this option are checked simultaniously. This is accomplished, by merely reflecting the information on the input lines, out on the output lines.
It should be noted, that the 800 bit is always zero.

External instrumentation is required to observe the results of this routine. No front panel indicators are used for this routine.

To initiate this routine simply;

1. Select the TEMPERATURE SET switch located in the yellow band of the rainbow and set for -998.
2. Depress and hold the FLOW switch, while momentarily depressing the RESET switch, then release both switches.
3. Verify information on output lines is the same as that on the input lines using some external instrumentation.
4. Depress RESET to cancel routine.

6-3.11 -999 Routine

This routine is not present in the software of the TP0412A.

6-4 REFRIGERATION SERVICING

Refrigeration servicing is not considered routine maintenance. Though the refrigeration subassembly is a straight forward non-complexed system, it is recommended that servicing be done ONLY by a trained refrigeration technician using well recognized techniques and approved equipment.

Under normal circumstances, leak testing should be accomplished with the refrigeration system properly charged with the amount and type of refrigerant specified.

However, the second stage is charged with R-170 which requires special considerations. So for this reason, it is recommended to evacuate and charge the second stage with R-502 when leak testing of the second stage is necessary.

UNDER NO CIRCUMSTANCES IS THE REFRIGERATION SYSTEM TO BE CHARGED FOR LEAK TESTING OR ANY PURPOSE WITH ANY GAS AT ANY PRESSURE ABOVE 150 PSIG.

6-4.1 Equipment Required

The following tools/equipment are required to service this assembly. Items 1 through 9 combine to form the charging station.

1. Vacuum pump (Alcatel ZM2008A [120v, 60hz])
2. Manifold with gauges (Robinair 13074)
3. Metal Lines with Quik Couplers [(2) Robinair 13024]
4. Line Adapters [(2) Robinair 13023]
5. Charging valves [(2) Ritchie DC1 1900)]
6. Vacuum Gauge (Airserco 8990SM - must specify voltage)
7. Oil Trap (Airserco 8971)
8. Vacuum Gauge Tube (Airserco 8970SM)
9. Brass Nipple (1/8" X 3½") & brass threaded coupling (1/8")
10. Crank case heater
11. Wrenches [(2) 9/16"]
12. Charging cylinder containing R502 first stage refrigerant.
13. Tank of R170 refrigerant for second stage.

Note: Due to the vacuum requirement it is recommended that the regulator on R170 tank be constructed with a metal diaphram.

14. Appropriate leak detection devices
15. Type "T" temperature meter for premounted thermocouples
16. Assorted hand tools
17. Volt/ohm meter or "Annie" (not necessary for all repairs)

6-4.2 Refrigeration Table

The following table provides the necessary information for determining the status of the refrigeration system, as well as, the information necessary to service the system.

Table 6-2. Refrigeration Data.

		First Stage	Second Stage
Refrigerant Type		R-502	R-170
Type of Charge		Measured	Static
Amount of Charge		1(lbs) 5½(oz.)	115 psig.*
No Load Performance	Suction	0	15" Hg
	Discharge	125	95 psi.
Balance Pressures (+25°C ambient)			95**

* Charging of second stage must be performed at room temperature [20°C to 23°C (68°F to 74°F)].

** Balance pressure is after system has been off for 8 hours and in an ambient as specified above.

6-4.3 TPO412A Dehydration and Charging Procedure

The procedure outlined on drawing D5272 (following page) is provided as a reference ONLY. If any instruction is unclear or unfamiliar DO NOT proceed. Contact Temptronic Service Department for assistance.

6-5 HEATER ASSEMBLY REPLACEMENT

STEP 1 Depress the system POWER switch and remove power cord.

STEP 2 Remove Thermal Cap, if installed, and heater housing assembly from optional stand, if present.

STEP 3 Loosen set screws securing the coupling assembly to the heater assembly. Slide coupling back over the SUCTION LINE assembly. Refer to drawings D3902 and D4107 (Section 7).

NOTE

TO PREVENT DAMAGING THE DEWPOINT HEATER, DO NOT CUT THE ELECTRICAL TAPE WRAPPED AROUND SUCTION LINE ASSEMBLY.

STEP 4 Pull back insulation material to expose electrical connections. Disconnect all wire connections except the brown and violet wires (dewpoint heater).

STEP 5 Using a wrench to maintain stationary the fitting at the end of the suction line assembly, rotate the heater assembly counter clockwise.

STEP 6 Apply leak lock to fitting threads.

STEP 7 Connect SUCTION LINE and replacement heater assembly by rotating the heater assembly clockwise until tight.

STEP 8 Make wire and thermocouple connections as shown.

STEP 9 Slide coupling assembly into position and secure in place with set screws (#8-32 X ¼, P/N FA81490).

STEP 10 Reinstall housing in stand, re-attach Thermal Cap then reconnect system for normal operation.

6-6 PARTS LIST

The Model TP0412A ThermoStream System has been designed, utilizing experience gained from Temptronic pioneered ThermoStream temperature controlled air sources, in use since 1974 and the latest technologies. As a result, the system has been determined to be both durable and trouble-free eliminating the need for large inventories of spare parts.

The following should not be considered as recommended spare parts required to support the TP0412A ThermoStream system. It is each user's responsibility to identify those items which are considered expendable or serviceable onsite and should make arrangements accordingly. Temptronic intends to replace, where possible, at the subassembly level in the field.

Assembly Level	Description	Part Number
System	Insulation Interface Kit	ZAK 40480
	System Operating Manual	LM 00620
	Power Cord	SA 33974
Primary Heat Exchanger	Foamed Heater Ass'y	SA 36720
	Thermocouple Ass'y	SA 41120
	Thermal Cap Assemblies	see Appendix B-3
	Glass Replacement Ass'y (6")	CS 00560
	Glass Replacement Ass'y (4")	CS 00570
	Shroud Kits	see Appendix B-4
*Refrigeration System	Replacement of these items is not considered routine maintenance.	
	Charged Secondary Heat Exchanger with Suction Line Ass'y (60hz)	SA 47482
	(50hz)	SA 47484
	First Stage Compressor - 3/4 HP (60hz)	ZZ 03670
	(50hz)	ZZ 03650
	Second Stage Compressor - 1/2 HP. (60hz)	ZZ 03680
	(50hz)	ZZ 03660
	Suction Line Ass'y	SA 38980

Microprocessor Controller

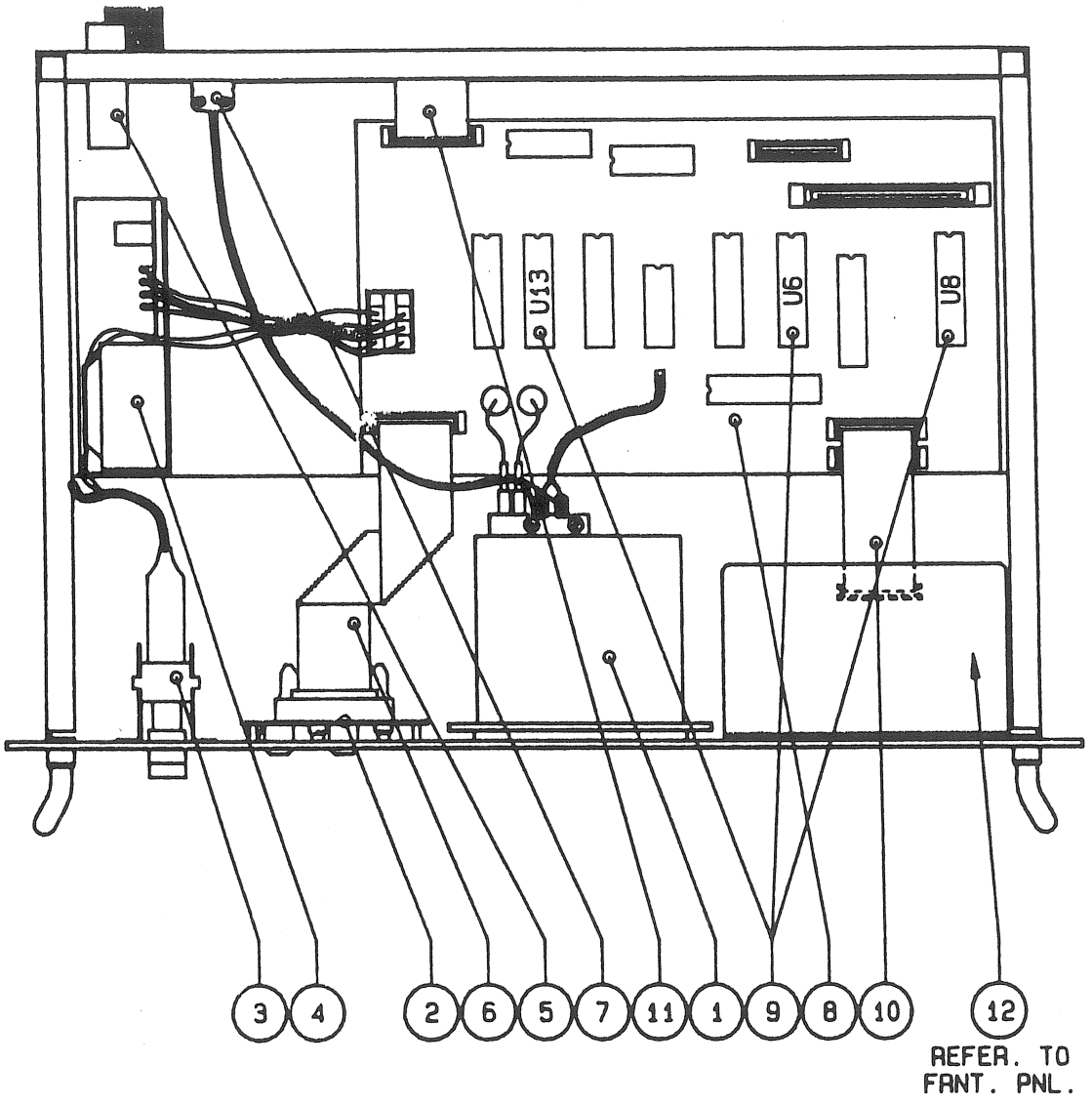

ITEM CALLOUTS (TEMPTRONIC PART #'S)		
1 - MM03320	5 - FF00020	9-CONTACT SERVICE DEPT.
2 - PC41663	6 - SA34831	10- SA34640
3 - SS36050	7 - CR00640	11- SA34871
4 - PS00350	8 - PC40883	12- (1) SELECT MODULE SA35900 (5) SELECT MODULE SA32160

Power Controller

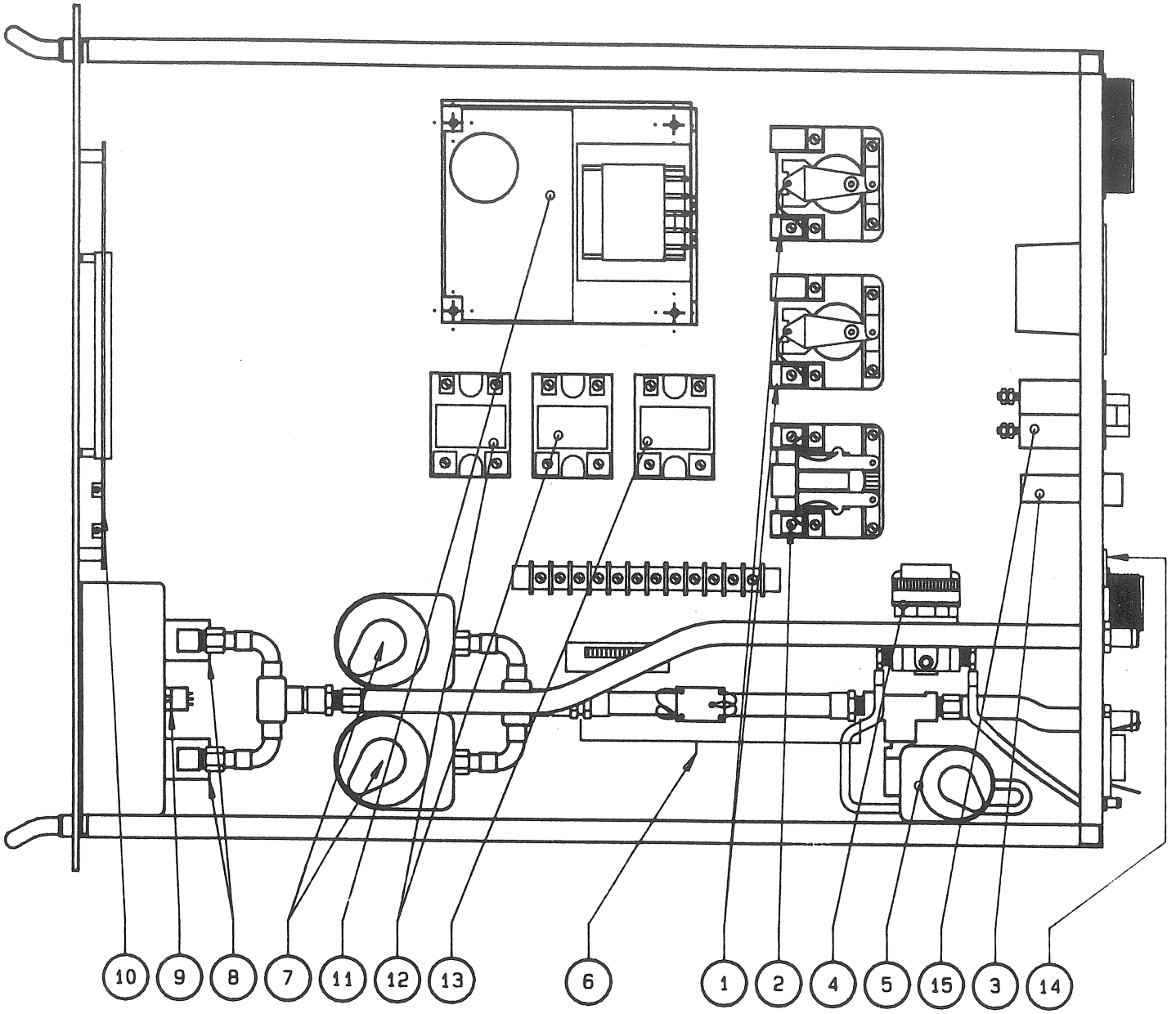

ITEM CALLOUTS (TEMPTRONIC PART #'S)		
1 - KK00840 (K2, K3)	6 - SA39230	11- SA43590 (PS1)
2 - KK00610 (K1)	7 - KK00790	12- KK00560 (K5, K6)
3 - FF00180 (FUSE)	8 - VA00140	13- KK00050 (K4)
4 - VA00200 (R1)	9 - SS00930	14- CR00640 (J7)
5 - KK00710 (K9)	10- PC40723	15- KK00860

TYPICAL EVACUATING / RECHARGING SETUP (SECOND STAGE)

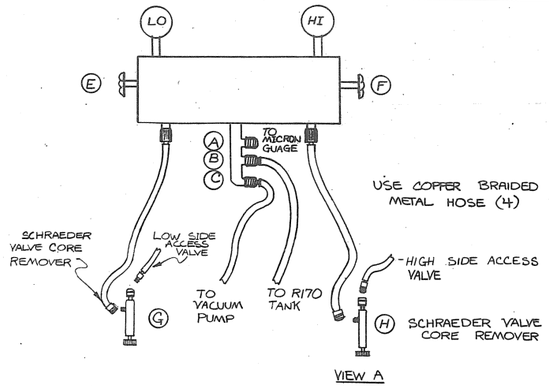

VIEW A

ALSO NEEDED ;

CRANKCASE HEATER
SCHAEDER VALVE REMOVER (2)
VACUUM (MICRON) GUAGE AND TUBE.
2 STAGE VACUUM PUMP
5 PORT MANIFOLD AND BRAIDED HOSES.

EVACUATING; 2ND STAGE

1. ATTACH CRANKCASE HEATER TO LOWER PORTION OF SECOND STAGE COMPRESSOR AND PLUG IN.
2. THREAD VALVE CORE PULLERS ON COMPRESSOR ACCESS VALVES.
3. REMOVE VALVE CORES BUT LEAVE VALVES (G) AND (H) ON REMOVERS CLOSED. CONNECT HOSES TO HIGH AND LOW SIDE STEM REMOVERS.
4. CONNECT VACUUM PUMP & R170 TANK. MAKE SURE VALVES (D)(G)(H)(A) ARE CLOSED & (C)(B)(E)(F) ARE OPEN.
5. * START THE VACUUM PUMP AND EVACUATE THE HOSES & MANIFOLDS. WHEN THE LOW PRESSURE GAUGE READS A VACUUM, SLOWLY OPEN VALVE (A) AND MONITOR VACUUM UNTIL IT REACHES LESS THAN 20 MICRONS. RECORD THE TIME TO ACHIEVE THIS VACUUM.
6. * CLOSE VALVE (C), SHUT OFF THE VACUUM PUMP, AND MONITOR THE VACUUM GAUGE RISE. AFTER THREE MINUTES IT SHOULD NOT EXCEED 100 MICRONS. IF THE PRESSURE DOES EXCEED 100 MICRONS IN 3 MINUTES, CHECK HOSES & CONNECTIONS FOR LEAKS & PROPER SET-UP. AND REPEAT STEPS 5 & 6. DONT PROCEED UNTIL GAUGES HAVE PROPER READINGS. RECORD THE PRESSURE AFTER 3 min.
7. RESTART THE VACUUM PUMP, CLOSE VALVE (A), OPEN VALVE (C), AND SLOWLY OPEN VALVES (G) AND (H). EVACUATE SYSTEM INTO A VACUUM AND OPEN VALVE (A). EVACUATE SYSTEM UNTIL 50 MICRONS IS ATTAINED AND HOLD FOR ONE HOUR.
8. * RECORD EVACUATION TIME & MICRON GUAGE READING. CLOSE VALVE C AND SHUT OFF VACUUM PUMP. AFTER THREE MINUTES THE PRESSURE SHOULD NOT EXCEED 300 MICRONS. RECORD MICRONS OF PRESSURE AFTER THREE MINUTES AND AFTER 5 MINUTES. DO NOT PROCEED UNTIL 300 MICRON LIMIT AFTER THREE MIN. IS ACHIEVED.
9. CLOSE ALL VALVES ((C) WILL ALREADY BE CLOSED), SHUT OFF MICRON GAUGE AND REMOVE CRANKCASE HEATERS.

CHARGING; 2ND STAGE

1. THE SECOND STAGE IS CHARGED PRIOR TO THE FIRST STAGE & THE CHARGING FOR THE SECOND STAGE IS DONE WITH THE COMPRESSOR OFF.
2. OPEN VALVES (E)(F)(G)(H) AND CRACK OPEN (D). (C) & (A) ARE CLOSED. USING VALVE (B) AS A CONTROL VALVE, CHARGE SYSTEM WITH A STATIC CHARGE OF R-170 AT AMBIENT TEMPERATURE (68° - 70° F) TO 115 PSIg.
3. WAIT 10 MINUTES FOR PRESSURE ON LOW SIDE AND HIGH SIDE TO EQUALIZE. ADD R170 TO ACHIEVE 115 PSIg IF NECESSARY AND WAIT 10 MINUTES MORE FOR PRESSURE TO EQUALIZE.
4. CLOSE ALL VALVES, REMOVE HOSES FROM VALVE CORE REMOVERS, REINSTALL CORES AND INSTALL CAPS ON ACCESS VALVES.
5. * RECORD CHARGE PRESSURE AND ABIENT TEMPERATURE. AFTER FIRST STAGE IS EVACUATED, CHARGED, SYSTEM IS RUN AND HAS BEEN SHUT DOWN FOR EIGHT HOURS, RECORD STATIC PRESSURE FOR BOTH STAGES.

* INDICATES RECORDS TO BE KEPT.

TPO 412 A DEHYDRATION AND EVACUATION PROCEDURE - FIRST STAGE.

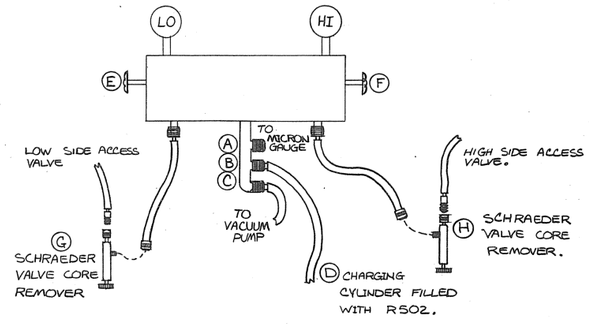

1. FOLLOW STEPS 1-9 FOR SECOND STAGE EVACUATION.

CHARGING; 1ST STAGE

1. OPEN VALVE D,E AND VALVE G AND PRESSURE SYSTEM TO 65 P.S.I.g. TURN ON FIRST STAGE COMPRESSOR AND ALLOW LIQUID TO EVAPORATE SLOWLY INTO THE COMPRESSOR. CONTINUE TO CHARGE WITH 21 ½ OUNCES OF R502 REFRIGERANT.
2. REINSTALL VALVE CORES.
3. REMOVE VALVE CORE PULLERS & INSTALL SEAL CAPS.
4. RECORD CHARGE AND AMBIENT TEMPERATURE ON CHECK-OUT LIST.

REVISIONS				
ZONE	LTR	DESCRIPTION	DATE	APPROVED

VIEW A

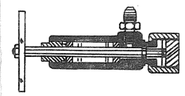

SCHRAEDER VALVE CORE REMOVER (CROSS SECTION)

			UNLESS OTHERWISE SPECIFIED DIMENSIONS ARE IN INCHES TOLERANCES ARE: FRACTIONS ± 1/64 DECIMALS .XX ± .01 .XXX ± .005 ANGLES ± 30'	
			MATERIAL	
			FINISH	
Section 6	1400620	TPO412A		
NEXT ASSY	USED ON	SYSTEM		
APPLICATION			DO NOT SCALE DRAWING	

TEMP. STOCK NO.	NOMENCLATURE OR DESCRIPTION	MFG. PART NO.	ITEM
	PARTS LIST		

CONTRACT NO.		TEMPTRONIC CORP.	
APPROVALS	DATE	TPO 412 - CHARGING PROCEDURE	
DRAWN KEN COLE	6-23-86		
CHECKED			
ENG			
UNLESS OTHERWISE SPECIFIED RESISTANCE VALUES ARE IN OHMS ± 5% WATT CAPACITANCE VALUES ARE IN ± 5% VOLTS		SIZE D / CODE IDENT NO. / DRAWING NO. 5272 / REV A	
		SCALE NONE	SHEET 1 OF 1

SECTION 7
SCHEMATIC/WIRING DIAGRAM LISTING

7-1 SCHEMATIC/WIRING DIAGRAM LISTING

This section has been reserved for schematics and wiring diagrams associated with the Model TP0412A ThermoStream® System.

Assembly	Drawing Number	Sheet	Title
Microprocessor Controller Assembly	D4145	2 of 2	Microprocessor Controller
	D4075	1 & 2	Schematic
	4088-3	-	Main Board Assembly
	C4166	1 of 3	P.C. Board Assembly
	C4171	1 of 1	Fr. Pnl. P.C.B. Schematic
	C3603	1 of 2	PC Bd. Ass. Switch Sel.
	C3612	-	Single Sel. Bd. Shematic
	C3602	-	Cont. Multiplexer Assy.
	C3600	1 of 1	Multiplexer Bd. Shematic
Power Controller Assembly	D3907	1 of 1	Power Cont. Assy. TP0412
	D4124	1 of 1	Schematic Power Cont.
	D4072-3	1 of 3	Fr. Pnl. Board Assembly
	D3997	1 of 1	Schematic Fr. Pnl. Bd.
Htr. Assy.(Pri. Ht. Exchanger)	D3902	1 of 1	Htr/Hsg Sec. Hx. Assy.
	D4107	1 of 2	Assembly Procedure
Cascade Refr. Assy. (Sec. Ht. Exchanger)	D4749	1 & 2	Assy. Insulation & Elec.
	D4754	1 of 1	Schematic Sec. Hx.

REVISIONS				
ZONE	LTR	DESCRIPTION	DATE	APPROVED

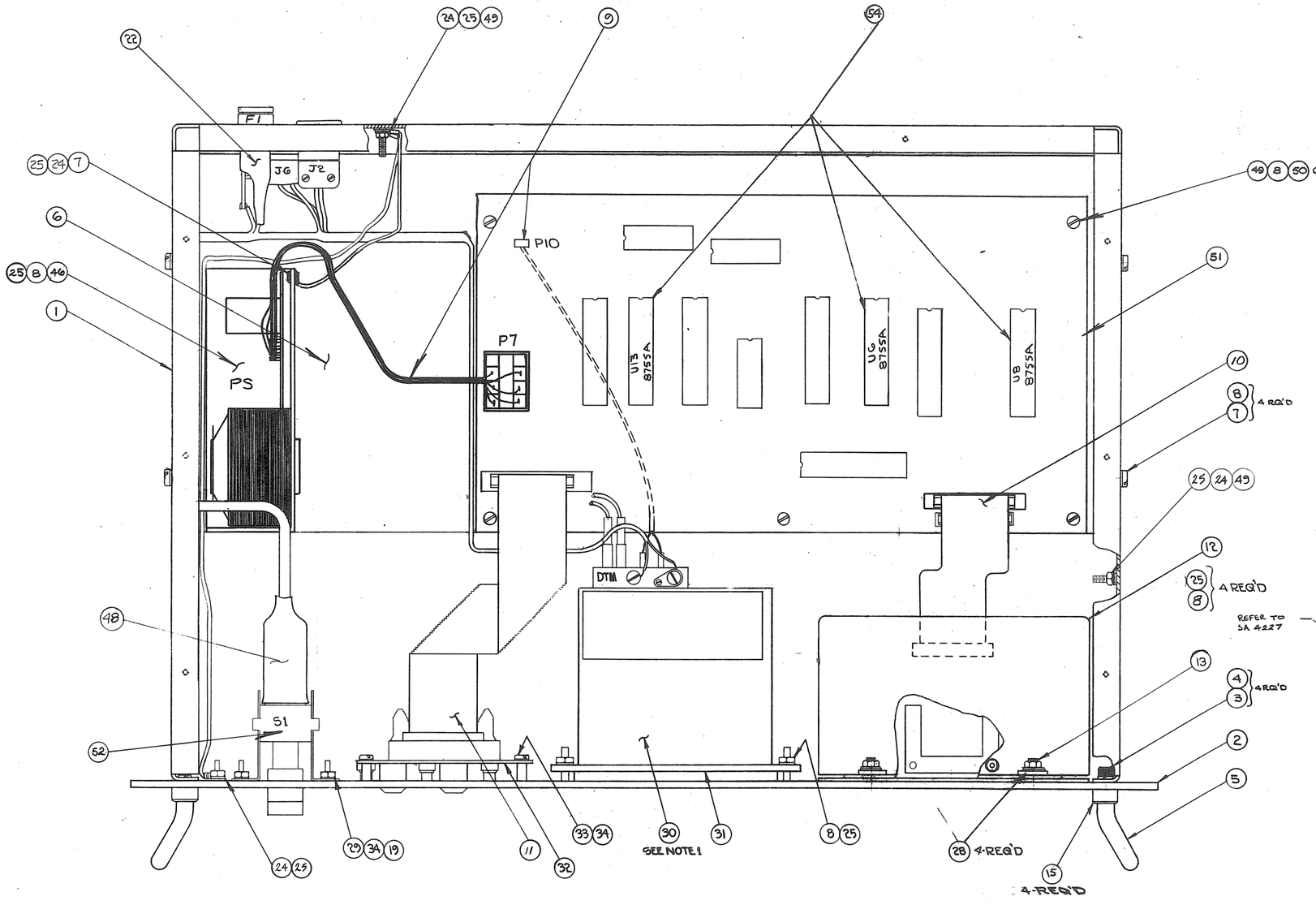

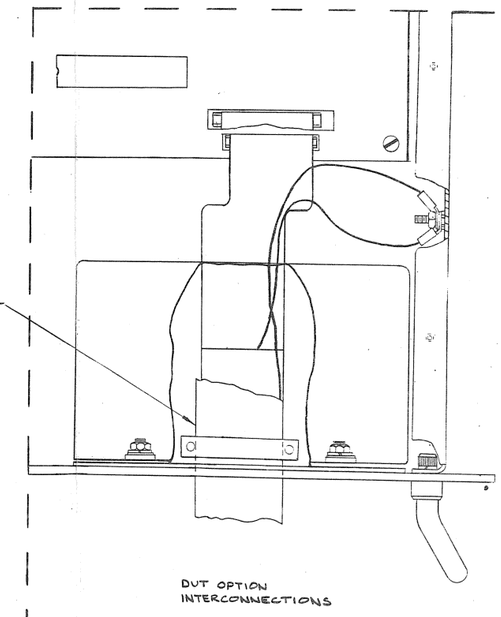

DUT OPTION INTERCONNECTIONS

TEMP. STOCK NO.	NOMENCLATURE OR DESCRIPTION	MFG. PART NO.	ITEM
	PARTS LIST		

UNLESS OTHERWISE SPECIFIED DIMENSIONS ARE IN INCHES
TOLERANCES ARE:
FRACTIONS ± 1/64 DECIMALS .XX ± .015 .XXX ± .005 ANGLES ± 30'

MATERIAL: SEE PARTS LIST

FINISH: —

DO NOT SCALE DRAWING

CONTRACT NO.

TEMPTRONIC CORP.

APPROVALS	DATE
DRAWN D. BUTCHER	4-2-84
CHECKED	4-4-84
ENG	

CHASSIS SUBASSEMBLY
MICROPROCESSOR CONTROLLER

UNLESS OTHERWISE SPECIFIED RESISTANCE VALUES ARE IN OHMS ± % WATT
CAPACITANCE VALUES ARE IN % VOLTS

SIZE	CODE IDENT NO.	DRAWING NO.	REV
D		4145	F01

SCALE 1/1 SHEET 1 OF 2

REVISIONS				
ZONE	LTR	DESCRIPTION	DATE	APPROVED
	B	ECO# 2918	1/6/86	

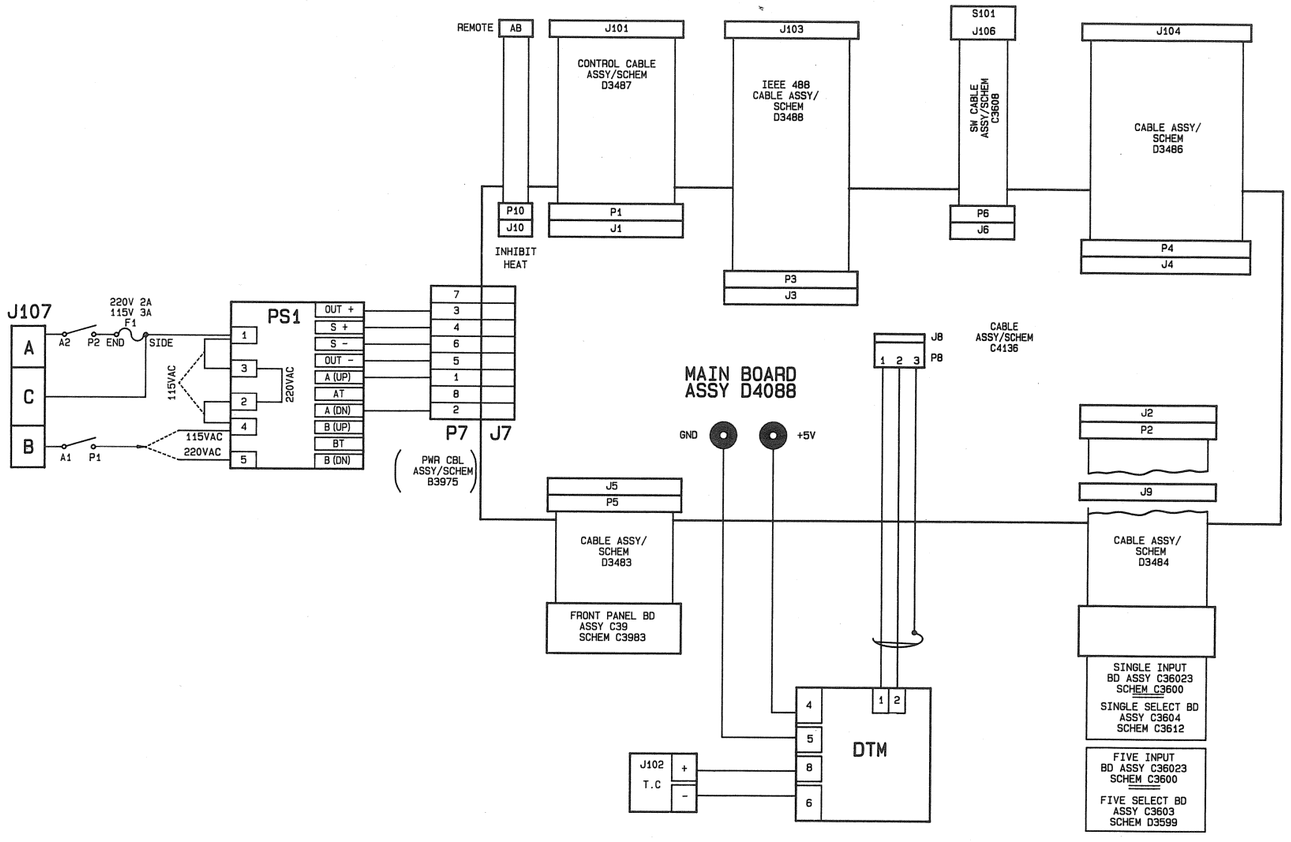

REV.	ECN. NO.	DATE
B	2918	1-9-86

TEMP. STOCK NO.	NOMENCLATURE OR DESCRIPTION	MFG. PART NO.	ITEM
	PARTS LIST		

D 3995	TCC3395	TP0412
NEXT ASSY	USED ON	SYSTEM
APPLICATION		

UNLESS OTHERWISE SPECIFIED DIMENSIONS ARE IN INCHES
TOLERANCES ARE:
FRACTIONS ± 1/64 DECIMALS .XX ± .01 .XXX ± .005 ANGLES ± 30'

MATERIAL: N/A

FINISH: N/A

DO NOT SCALE DRAWING

CONTRACT NO.

APPROVALS	DATE
DRAWN B.D.	3-22-84
CHECKED	
ENG	

UNLESS OTHERWISE SPECIFIED RESISTANCE VALUES ARE IN OHMS ± % WATT
CAPACITANCE VALUES ARE IN ± % VOLTS

TEMPTRONIC CORP.

SCHEMATIC/WIRING DIAGRAM

SIZE	CODE IDENT NO.	DRAWING NO.	REV
D		4075	E

SCALE N/A SHEET 1 OF 2

FOTOSEAM/BROOKSIDE 0225-D

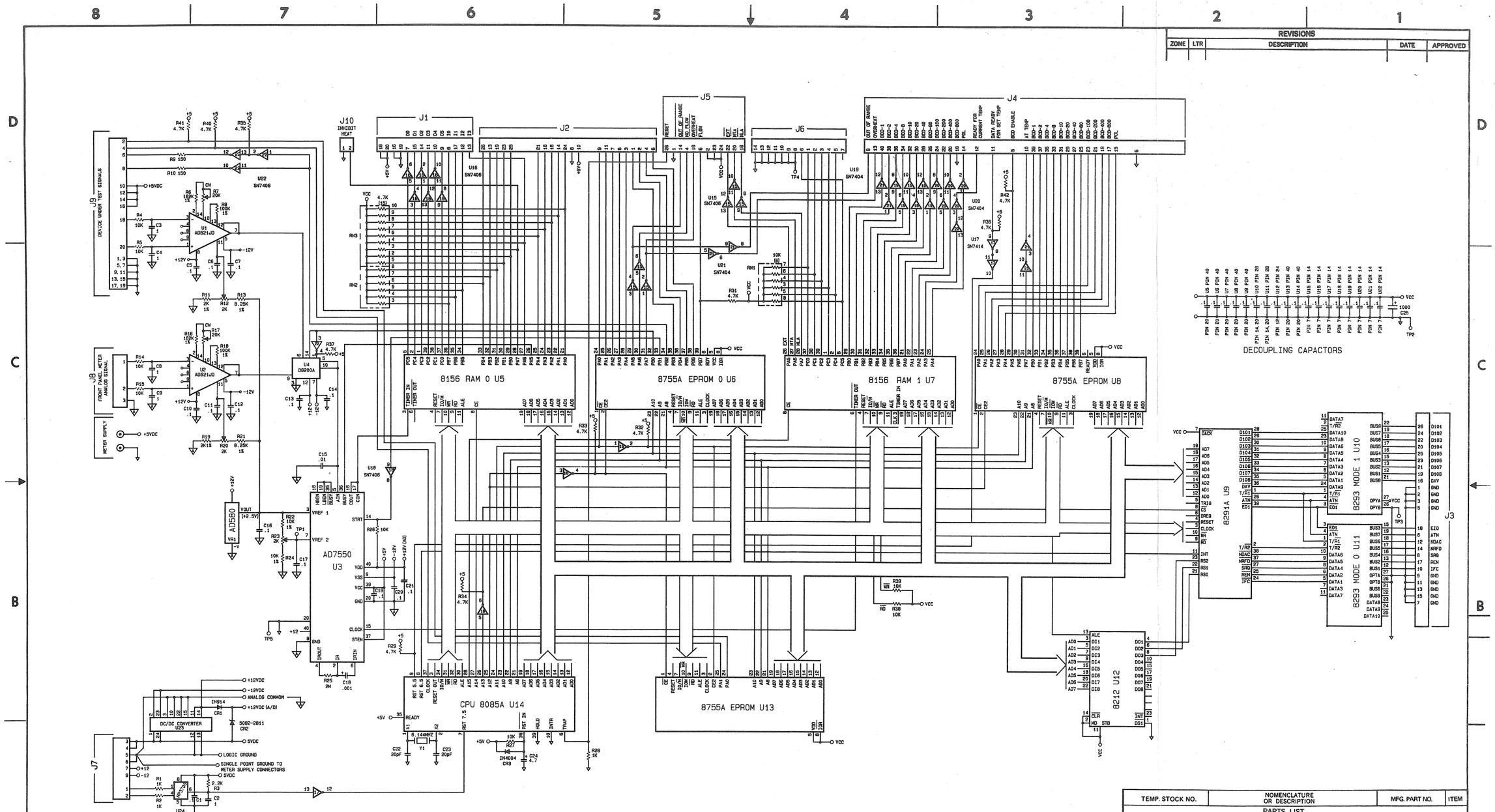

REVISIONS				
ZONE	LTR	DESCRIPTION	DATE	APPROVED

TEMP. STOCK NO.	NOMENCLATURE OR DESCRIPTION	MFG. PART NO.	ITEM

PARTS LIST

Section 7	LINSHOO	TPO412A
		TPO412
D4088	TCC3995	TPO317
NEXT ASSY	USED ON	SYSTEM
APPLICATION		

UNLESS OTHERWISE SPECIFIED DIMENSIONS ARE IN INCHES TOLERANCES ARE:
FRACTIONS ± 1/64 DECIMALS .XX ± .015 .XXX ± .005 ANGLES ± 30'

MATERIAL

FINISH

DO NOT SCALE DRAWING

CONTRACT NO.

APPROVALS	DATE
DRAWN B. DELPRETE	3-22-84
CHECKED	
[signature]	4-4-84
ENG	

UNLESS OTHERWISE SPECIFIED RESISTANCE VALUES ARE IN OHMS ± 5 % 1/4 WATT CAPACITANCE VALUES ARE IN uf ± % VOLTS

TEMPTRONIC CORP.

SCHEMATIC CONTROL BOARD

SIZE	CODE IDENT NO.	DRAWING NO.	REV
D		4075	B

SCALE NA

SHEET 2 OF 2

REVISIONS				
ZONE	LTR	DESCRIPTION	DATE	APPROVED
	A	RELEASED		

TEMPTRONICS CORP
CONTROL BOARD

ORIENTATION KEYWAY
TYPICAL, J1,2,3,4,5,6,7,9

5 PLACES
TP1 THRU TP5

2 PLACES

IN914

IN4004

3 PLACES

5 PLACES

11 PLACES

8 PLACES

2 PLACES

3 PLACES
(REF. ONLY)

3 PLACES

2 PLACES

2 PLACES

2 PLACES

2 PLACES

2 PLACES

3 PLACES

2 PLACES

2 PLACES

2 PLACES

2 PLACES

2

REVISIONS				
ZONE	LTR	DESCRIPTION	DATE	APPROVED
	A	RELEASED	5-1-84	
	B	REVISED PER ECN 2440	6-13-84	H.O.

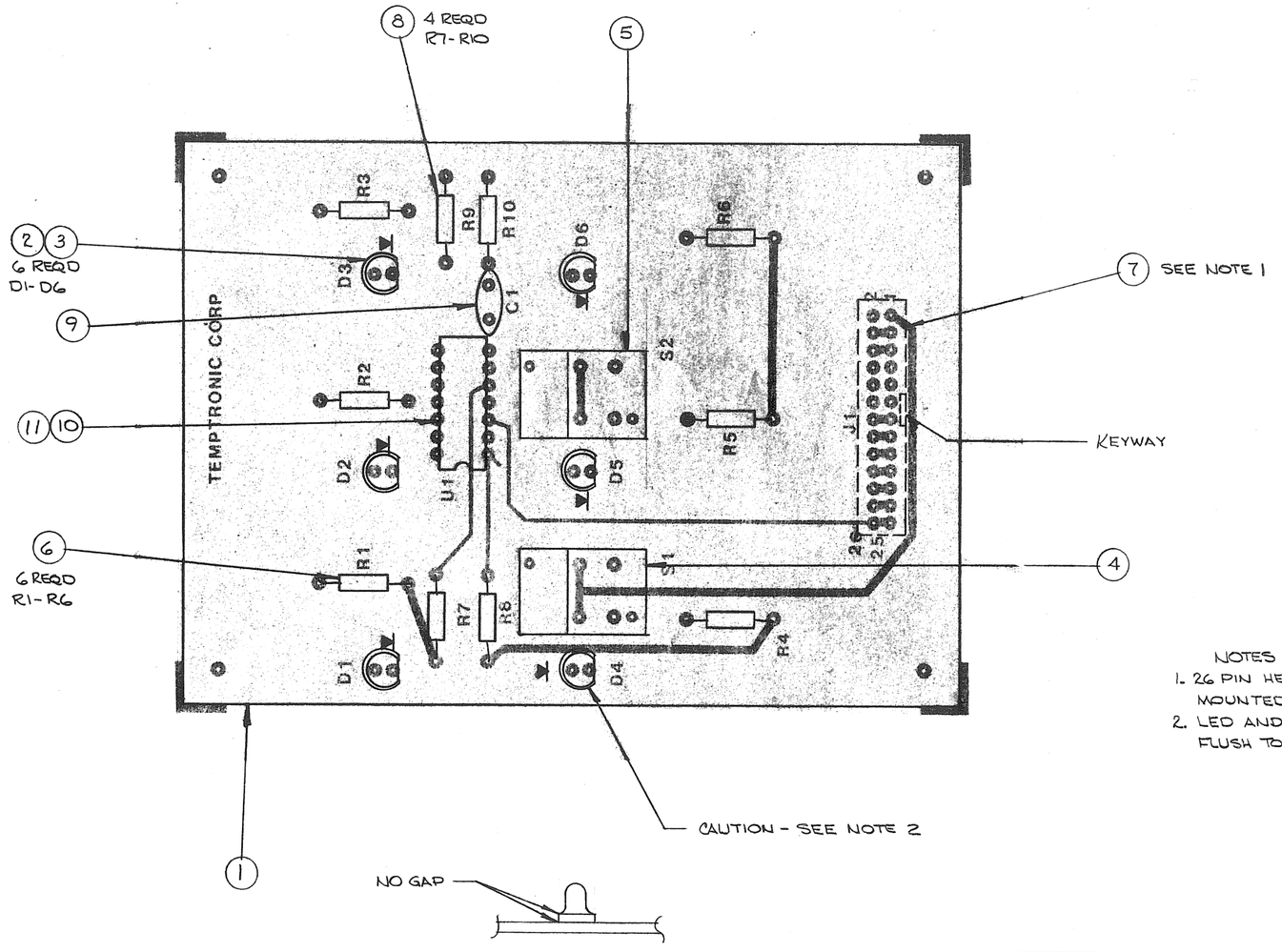

NOTES
1. 26 PIN HEADER (ITEM 7) IS TO BE MOUNTED FROM FAR SIDE
2. LED AND SPACER ITEMS 2 & 3 TO REMAIN FLUSH TO BOARD AFTER SOLDERING

TEMP STOCK NO.	NOMENCLATURE OR DESCRIPTION	MFG. PART NO.	ITEM
	PARTS LIST		

Section 7	LMBHOD	TP0412A
D4145	TC13956	TP0412A
NEXT ASSY	USED ON	SYSTEM
APPLICATION		

UNLESS OTHERWISE SPECIFIED DIMENSIONS ARE IN INCHES
TOLERANCES ARE:
FRACTIONS ± 1/64 DECIMALS .XX ± .015 .XXX ± .005 ANGLES ± 30'
MATERIAL
FINISH
DO NOT SCALE DRAWING

CONTRACT NO.

APPROVALS	DATE
DRAWN M. ROCHE	4/26/84
CHECKED JC	5/11/84
ENG.	

UNLESS OTHERWISE SPECIFIED:
RESISTANCE VALUES ARE IN OHMS ± % WATT
CAPACITANCE VALUES ARE IN ± % VOLTS

TEMPTRONIC CORP

P.C. BOARD ASSEMBLY
FRONT PANEL

SIZE	CODE IDENT NO.	DRAWING NO.	REV.
C		4166	B
SCALE 2:1			SHEET 1 OF 3

REVISIONS				
ZONE	LTR	DESCRIPTION	DATE	APPROVED
	A	RELEASED	5-1-84	
	B	REVISED PER ECN # 2459	6-26-84	DEB

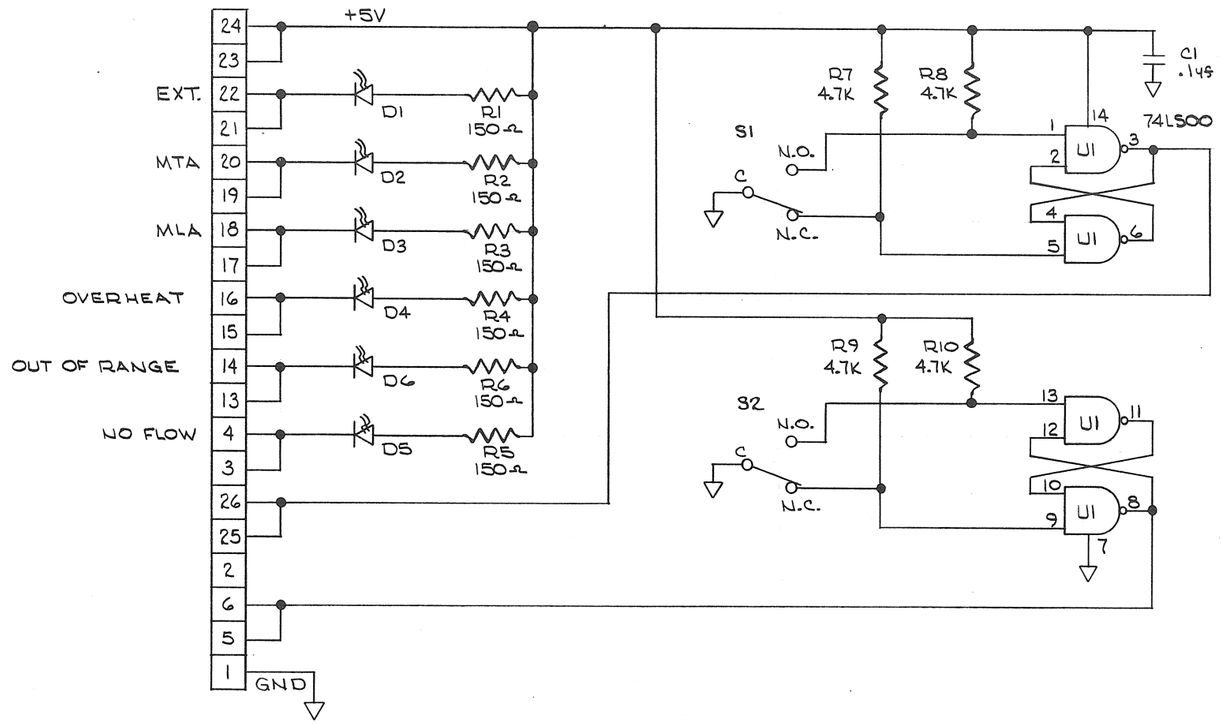

NOTE
1. S1 & S2 FRONT PANEL MOUNTED, MOMENTARY PUSH BUTTON.

TEMP STOCK NO.	NOMENCLATURE OR DESCRIPTION	MFG. PART NO.	ITEM
	PARTS LIST		

Section 7	LM61400	TP0412A
C 4166.	PC41663	TP0412A
NEXT ASSY	USED ON	SYSTEM
APPLICATION		

UNLESS OTHERWISE SPECIFIED DIMENSIONS ARE IN INCHES
TOLERANCES ARE:
FRACTIONS ± 1/64 DECIMALS .XX ± .015 .XXX ± .005 ANGLES ± 30'

MATERIAL

FINISH

DO NOT SCALE DRAWING

CONTRACT NO.

APPROVALS	DATE
DRAWN M. Boche	4/27/84
CHECKED	5/1/84
ENG.	

UNLESS OTHERWISE SPECIFIED:
RESISTANCE VALUES ARE IN OHMS ± % WATT
CAPACITANCE VALUES ARE IN ± % VOLTS

TEMPTRONIC CORP

FRONT PANEL P.C.B.
SCHEMATIC

SIZE	CODE IDENT NO.	DRAWING NO.	REV.
C		4171	B

SCALE 2:1 SHEET 1 OF 1

REVISIONS				
ZONE	LTR	DESCRIPTION	DATE	APPROVED
	A	REVISED PER ECN 2257	11-9-83	D.O.
	B	REVISED PER ECN 2385	4-11-84	D.O
	C	ECO # 3603C	6-30-87	

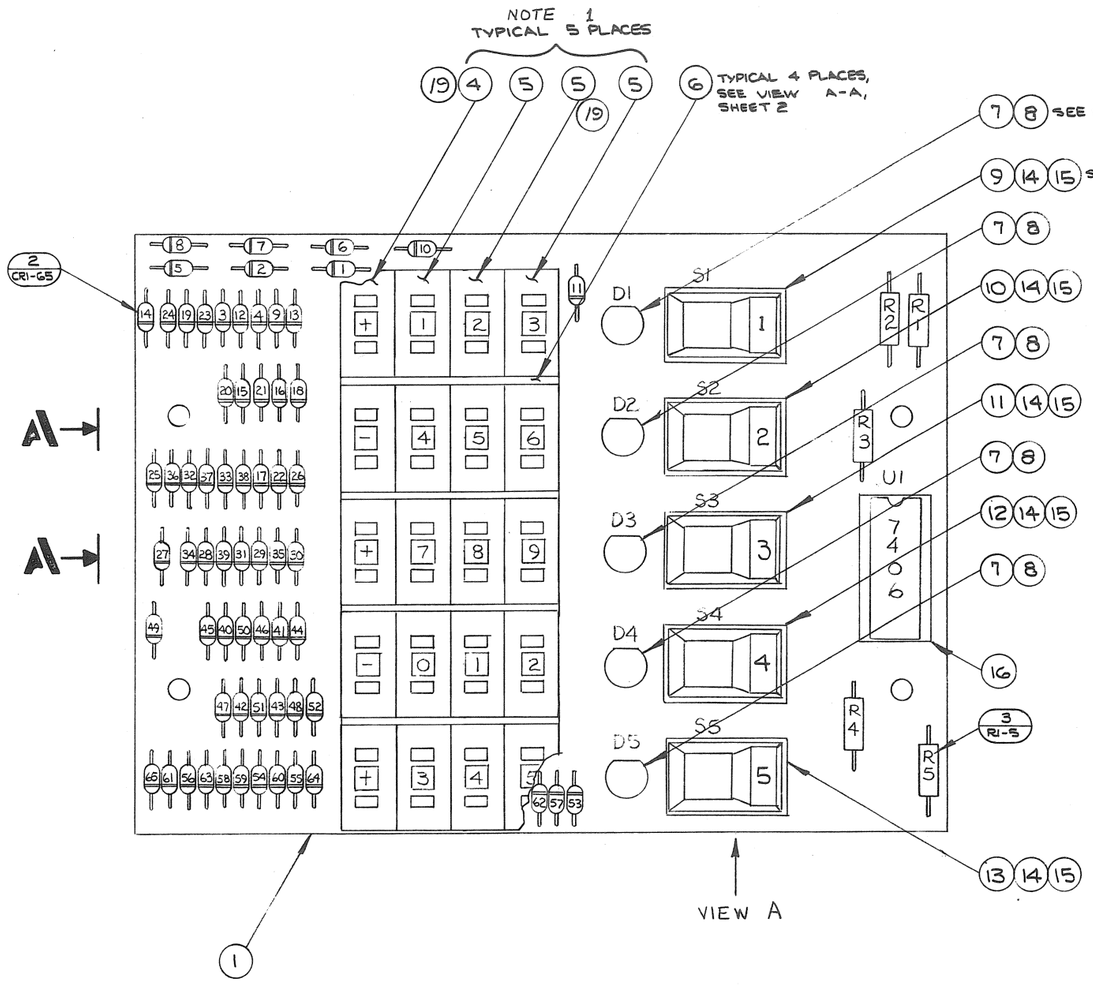

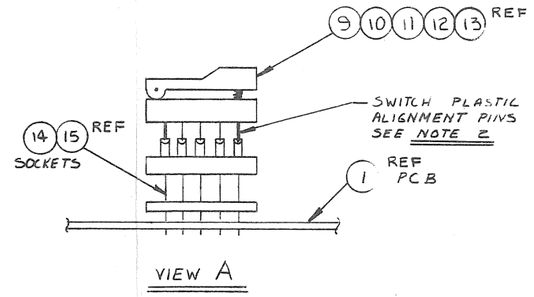

NOTES:

1. THE PUSHBUTTON INDEXING SWITCHES (4) & (5) AND SELECTION SWITCHES (9) THRU (13), ARE HIGHLY SUSCEPTIBLE TO CONTACT CORROSION FROM BOARD CLEANING AGENT. SPECIAL CARE MUST BE GIVEN TO ASSURE THIS CONTAMINATION DOES NOT OCCUR.
2. THE SWITCHES (9) THRU (13) HAVE PLASTIC LOCATOR PINS. THESE PINS MUST BE INSTALLED INTO THE SOCKET TO ASSURE PROPER ALIGNMENT OF SWITCHES TO FRONT PANEL.

TEMP STOCK NO.	NOMENCLATURE OR DESCRIPTION	MFG. PART NO.	ITEM
	PARTS LIST		

Section 7	LM5140G	TP0412A
D3216	TQC3588	TP3178
NEXT ASSY	USED ON	SYSTEM
APPLICATION		

UNLESS OTHERWISE SPECIFIED DIMENSIONS ARE IN INCHES
TOLERANCES ARE:
FRACTIONS ± 1/64 DECIMALS .XX ± .015 .XXX ± .005 ANGLES ± 30'

MATERIAL: SEE P/L

FINISH:

DO NOT SCALE DRAWING

CONTRACT NO.

APPROVALS	DATE
DRAWN D.BUTCHER	3.31.82
CHECKED	5-20-82
ENG. EAL	5/20/82

UNLESS OTHERWISE SPECIFIED: RESISTANCE VALUES ARE IN OHMS ± % WATT
CAPACITANCE VALUES ARE IN ± % VOLTS

TEMPTRONIC CORP

P.C. BOARD ASSEMBLY
5 SWITCH SELECT

SIZE	CODE IDENT NO.	DRAWING NO.	REV.
C		3603	C

SCALE 2/1 SHEET 1 OF 2

REVISIONS				
ZONE	LTR	DESCRIPTION	DATE	APPROVED
	B	ECN 2932	2186	MMP

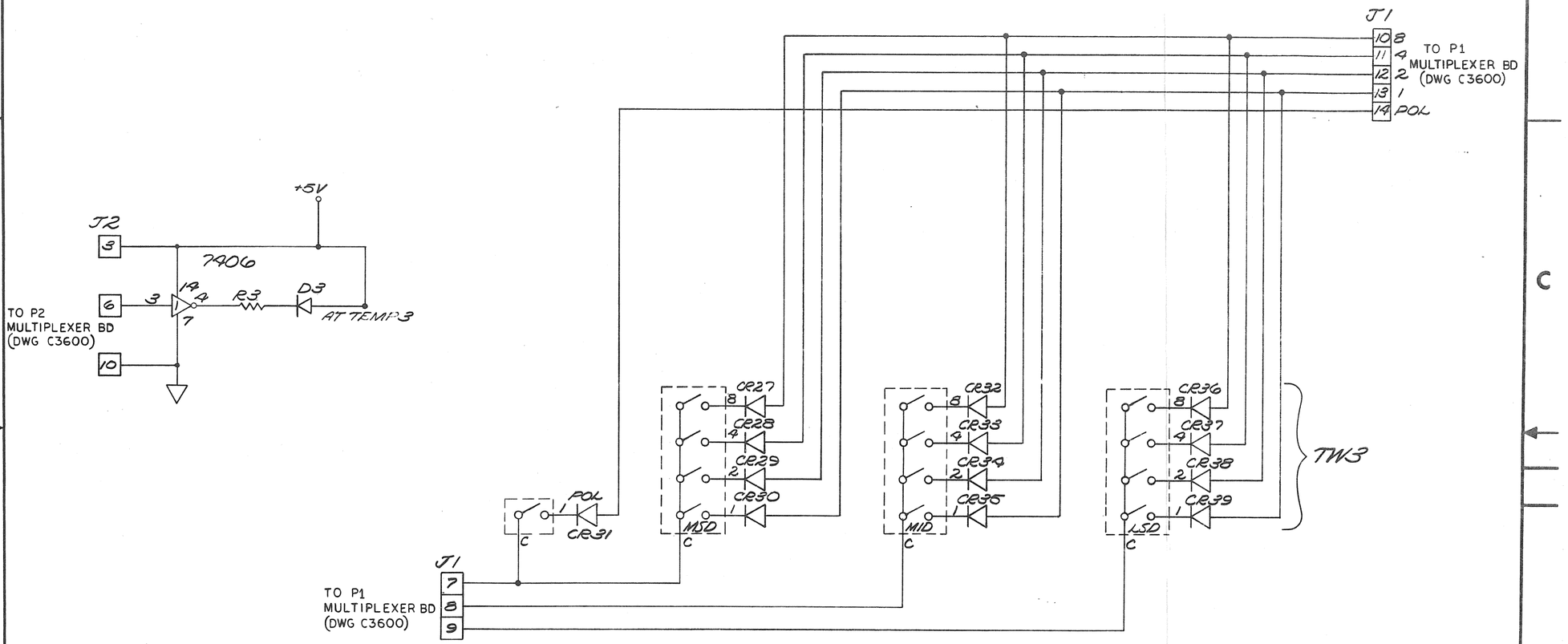

NOTES
1-CR27-CR39, IN914 OR EQUIVALENT

TEMP STOCK NO.	NOMENCLATURE OR DESCRIPTION	MFG. PART NO.	ITEM
	PARTS LIST		

		TP0412A
D3995	TCC3995	TP0317
Section 7	LMSHOD	TP0412A
C3604	TCC-3588	TP317B
NEXT ASSY	USED ON	SYSTEM
APPLICATION		

UNLESS OTHERWISE SPECIFIED DIMENSIONS ARE IN INCHES
TOLERANCES ARE:
FRACTIONS ± 1/64 DECIMALS .XX ± .015 .XXX ± .005 ANGLES ± 30'
MATERIAL
FINISH
DO NOT SCALE DRAWING

CONTRACT NO.

APPROVALS	DATE
DRAWN	5-30-82
CHECKED	
ENG	5/20/82

UNLESS OTHERWISE SPECIFIED:
RESISTANCE VALUES ARE IN OHMS ± % WATT
CAPACITANCE VALUES ARE IN ± % VOLTS

TEMPTRONIC CORP

SINGLE SELECT BRD. SCHEMATIC

SIZE	CODE IDENT NO.	DRAWING NO.	REV.
C		3612	B

SCALE NONE SHEET 1 OF 1

REVISIONS				
ZONE	LTR	DESCRIPTION	DATE	APPROVED
	A	REVISED PER DCN 1860	7/29/82	M.O.
	B	REVISED PER ECN 2392	4-18-84	M.O.

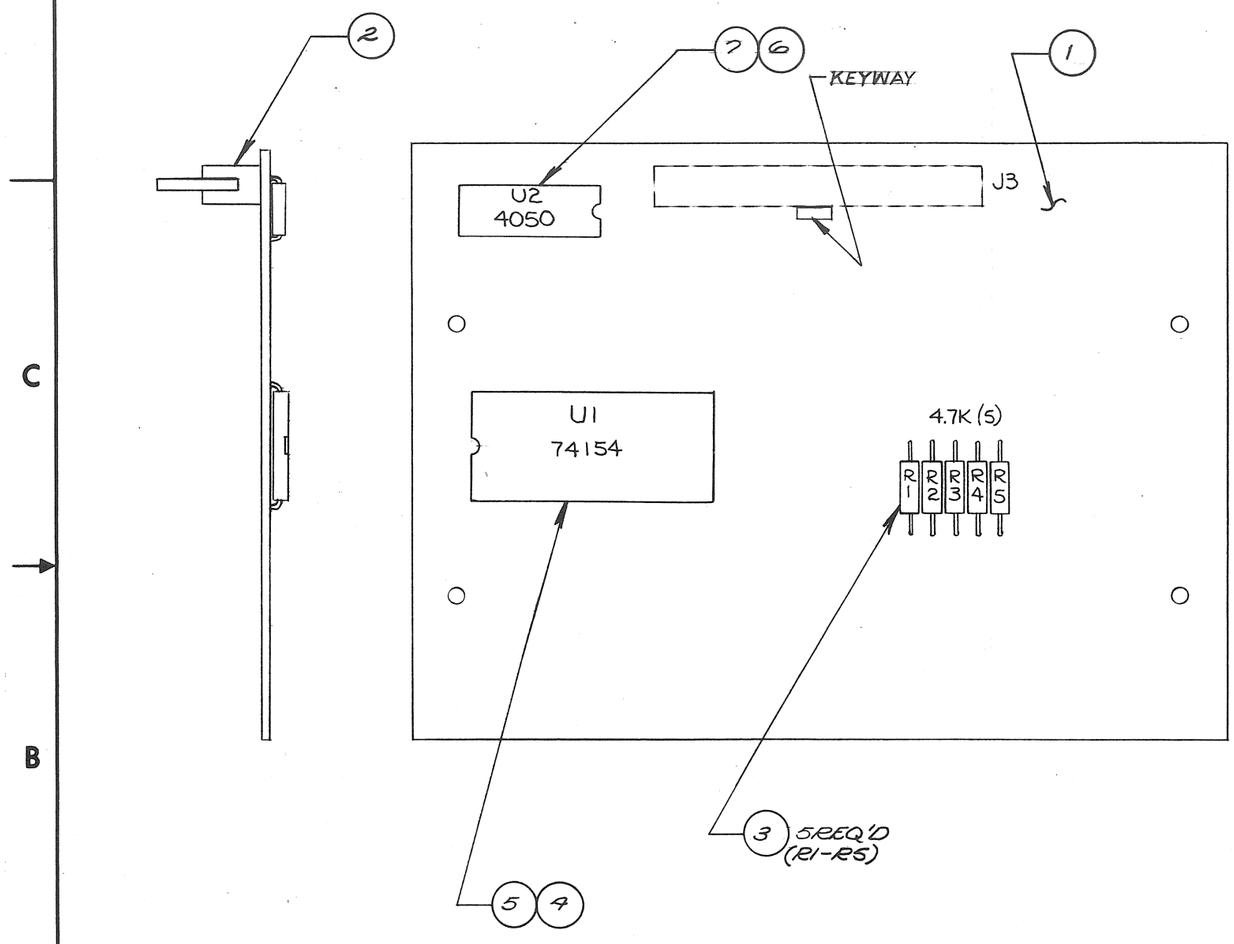

TEMP STOCK NO.	NOMENCLATURE OR DESCRIPTION	MFG. PART NO.	ITEM
	PARTS LIST		

UNLESS OTHERWISE SPECIFIED DIMENSIONS ARE IN INCHES
TOLERANCES ARE:
FRACTIONS ± 1/64 DECIMALS .XX ± .015 .XXX ± .005 ANGLES ± 30'

MATERIAL

FINISH

DO NOT SCALE DRAWING

APPLICATION		
NEXT ASSY	USED ON	SYSTEM
Section 7	LM81400	TP04128
D3590	TCC3580	TP03178

CONTRACT NO.

APPROVALS	DATE
DRAWN LDR	4/12/82
CHECKED M.O.	5-20-82
ENG.	
EAC	5/20/82

UNLESS OTHERWISE SPECIFIED:
RESISTANCE VALUES ARE IN OHMS ± % WATT
CAPACITANCE VALUES ARE IN ± % VOLTS

TEMPTRONIC CORP

CONTROLLER MULTIPLEXER ASSEMBLY

SIZE	CODE IDENT NO.	DRAWING NO.	REV.
C		3602	B

SCALE | SHEET OF

REVISIONS				
ZONE	LTR	DESCRIPTION	DATE	APPROVED
	B	ECO #2932	2/86	MPF

4-LINE TO 16 LINE DECODER/DEMULTIPLEXER

INTERCONNECTING CABLE ASSY SA3484 TO MAIN BD J2 (SCHEM D4011 SHEET 2)

74154 U1

U2 J3 (1, 2, 4, 6) → A, B, C, D (23, 22, 21, 20)

U1 G1 (18), G2 (19) → +5V

U1 (12) → GND

U1 (24) → +5V

U1 Ø, 1, 2, 3, 4, 5, 6, 7, 8, 9, 10, 11, 12, 13, 14, 15 → P1 (1, 2, 3, 4, 5, 6, 7, 8, 9, 15, 16, 17, 18, 19, 20)

U2 J3 (10) → +5V → P2 (3)

U2 (9, 11, 7, 5, 3) → U4 (16, 18, 21, 14, 24) → P2 (8, 11, 12, 2, 1)

U2 J3 (8) → GND → P2 (10)

REFERENCE INFORMATION
SWITCH SELECT BOARD SCHEMATIC
(SINGLE SELECT DWG #3612)
(5 SWITCH SELECT DWG #3599)

J1: 1, 3, 4, 6, 7, 8, 9, 15, 16, 17, 18, 19, 20 → TW1, ----, TW2, ----, TW3, ----, TW4, ----, TW5

J2: 3, 5, 4, 6, 7, 9, 1, 2, 8, 11, 12, 10 → AT TEMP INDICATORS (1), (2), (3), (4), (5); SELECT SWITCHES (S1), (S2), (S3), (S4), (S5)

J1: 10, 11, 12, 13, 14

+5V → 4.7K(5) R1 → P1 (10) → 8; 14, 15 → J3 (13)

+5V → R2 → 11 → 4; 3, 2 → (19)

+5V → R3 → 12 → 2; 11, 12 → (23)

+5V → R4 → 13 → 1; 9, 10 → (25)

+5V → R5 → 14 → POL; 7, 6 → (26)

4050 U2

INTERCONNECTING CABLE ASSY SA3484
TOMAIN BOARD J2 (U4)
SET TEMPERATURE INPUT (BCD)
(SCHEM D4011 SHEET 2)

TEMP STOCK NO.	NOMENCLATURE OR DESCRIPTION	MFG. PART NO.	ITEM
	PARTS LIST		

		TP0412A
D3995	TCC3995	TP0317
Section 7	LM5400	TP0412A
C3602	TCC3588	TP3178
NEXT ASSY	USED ON	SYSTEM
APPLICATION		

UNLESS OTHERWISE SPECIFIED DIMENSIONS ARE IN INCHES
TOLERANCES ARE:
FRACTIONS ± 1/64 DECIMALS .XX ± .015 .XXX ± .005 ANGLES ± 30'
MATERIAL
FINISH
DO NOT SCALE DRAWING

CONTRACT NO.

APPROVALS	DATE
DRAWN K.G.	1-4-82
CHECKED	
ENG	5/20/82

UNLESS OTHERWISE SPECIFIED:
RESISTANCE VALUES ARE IN OHMS ± % WATT
CAPACITANCE VALUES ARE IN ± % VOLTS

TEMPTRONIC CORP

MULTIPLEXER BOARD SCHEMATIC

SIZE	CODE IDENT NO.	DRAWING NO.	REV.
C		3600	B

SCALE | SHEET 1 OF 1

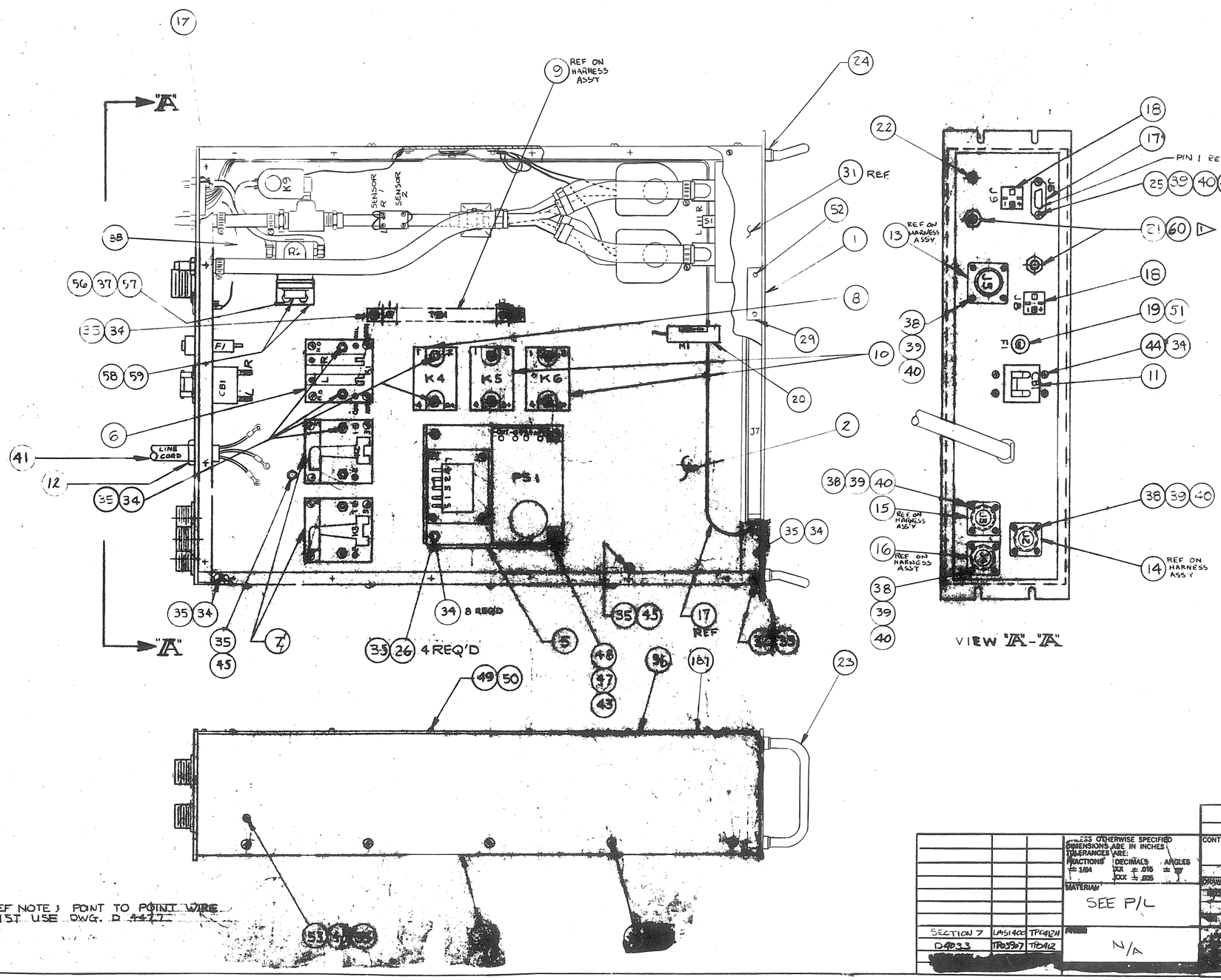

REF NOTE: POINT TO POINT WIRE LIST USE DWG. D 4477

REVISIONS				
ZONE	LTR	DESCRIPTION	DATE	APPROVED
	A	INITAL RELEASE		
	B	REVISED PER ECN 2311	1/16/84	[illegible]
	C	REVISED PER ECN 2353	2-2-84	[illegible]
	D	REVISED PER ECN 2370	3-15-84	[illegible]
	E	REVISED PER ECN 2420	[illegible]	[illegible]
	F	REVISED PER ECN 2466	7-12-84	[illegible]
	G	REVISED PER ECN 2499	[illegible]-8-84	[illegible]
	H	REVISED PER ECN # 2506	8-14-84	[illegible]
	J	ECN# 2531	[illegible]	[illegible]
	K	ECN# 2616	1-1-85	[illegible]
	L	ECN # 2646 (P/L ONLY)	[illegible]	[illegible]
	M	REVISED PER ECN # 2707	3-3-85	[illegible]
87.5	N	REVISED PER ECN 2812	[illegible]	[illegible]
	P	REVISED PER ECN 2912	12/85	[illegible]
	R	REVISED PER ECN 3061	5-15-86	PB
	S	REVISED PER ECN 3907S	6-18-86	PB
	T	REDRAWN PER ECN # 3907T	2-3-87	PB
	U	REVISED PER ECN#3907U	2-26-87	PB
	V	REC ECN 3907V	3-25-87	[illegible]

NOTE:
1. USE ½ WASHER (ITEM 60) ON REAR SIDE OF PANEL AS REQUIRED.
2. MOUNT M1 AS CLOSE TO FRONT PANEL AS WIRE LEADS WILL ALLOW.
3. USE SHEETS 3 & 4 TO INSTALL & LOCATE TIE POINTS FOR HARNESS WHEN REQ'D

TEMP. STOCK NO.	NOMENCLATURE OR DESCRIPTION	MFG. PART NO.	ITEM
	PARTS LIST		

SECTION 7	LMS1400	TPO412A
D4033	TPO3907	TPO412
[redacted]		

UNLESS OTHERWISE SPECIFIED DIMENSIONS ARE IN INCHES TOLERANCES ARE: FRACTIONS ± 1/64 DECIMALS .XX ± .015 .XXX ± .005 ANGLES ± 1°

MATERIAL: SEE P/L

FINISH: N/A

CONTRACT NO.

APPROVALS	DATE
DRAWN J.G. HENDERSON	11-30-83
CHECKED [illegible]	2-21-84
[illegible]	2-21-84

UNLESS OTHERWISE SPECIFIED DIMENSIONS VALUES ARE IN [illegible]

TEMPTRONIC CORP.

POWER CONTROLLER ASSEMBLY (TPO 412)

SIZE	CODE IDENT NO.	DRAWING NO.	REV
D		3907	V

SHEET 1 OF 4

REVISIONS				
ZONE	LTR	DESCRIPTION	DATE	APPROVED
	D	ECN # 4124-D	8-2-85	JLW

REV	ECN NO	DATE
A	RELEASED	
B	2401	5-2-84
C	2812	9-10-85
D	4124-D	

P2 AC INPUT REF. POWER CABLE ASSY.#SA
J2 CONTROLLER
J3 STAND
J4 AIR DRYER
J5 SECONDARY HT.EX.
J6 CONTROL CABLE CONN.14 PIN REF.DWG#
J7 PCB CONNECTOR
J8 TC CONN. SECONDARY HT.EX.
J9 TC CONN. CONTROLLER

K1 MAIN POWER CONTACTOR
K2 1ST STAGE COMPRESSOR
K3 2ND STAGE COMPRESSOR
K4 HEATER
K5 TEST SOLENOID CONTROL
K6 TRANSITION SOLENOID CONTROL

CB1 CIRCUIT BREAKER
F1 DC POWER SUPPLY FUSE
S1 MODE SWITCH HT/CL HT ONLY
SENSOR 1 AIR STREAM THERMISTOR
SENSOR 2 BLOCK THERMISTOR
P1 CONT.CA.ASSY.20 PIN CONN.REF.DWG #
PS1 DC POWER SUPPLY
M1 ELAPSED TIME METER
TB1 TERMINAL STRIP
PCB1 FRONT PANEL BRD ASSY.REF SCHEM #D3997

J1 PRINTED CIRCUIT
PCB1 BOARD CONNECTOR

K7 TEST SOLENOID VALVE
K8 TRANSITION SOLENOID VALVE
K9 STAND SOLENOID VALVE
MOV VARISTOR

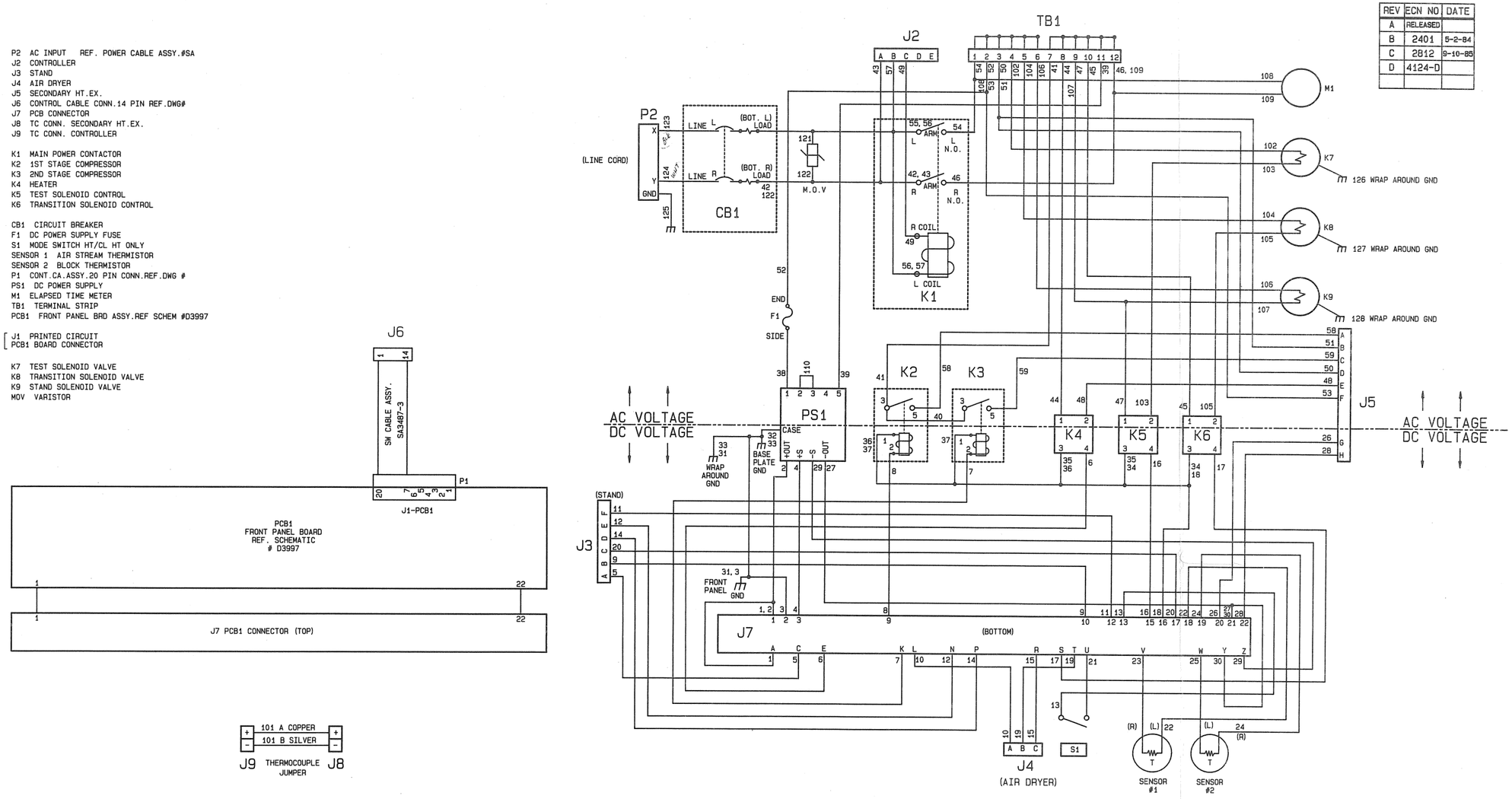

TEMP. STOCK NO.	NOMENCLATURE OR DESCRIPTION	MFG. PART NO.	ITEM

PARTS LIST

UNLESS OTHERWISE SPECIFIED DIMENSIONS ARE IN INCHES TOLERANCES ARE:
FRACTIONS ± 1/64 DECIMALS .XX ± .01 .XXX ± .005 ANGLES ± 30'

MATERIAL

FINISH

NEXT ASSY	USED ON	SYSTEM
APPLICATION		

DO NOT SCALE DRAWING

CONTRACT NO.

APPROVALS		DATE
DRAWN	J. STRAK	8-26-85
CHECKED	K. Woodman	8-12-85
ENG	JIM C.	[illegible]

UNLESS OTHERWISE SPECIFIED RESISTANCE VALUES ARE IN OHMS ± % WATT CAPACITANCE VALUES ARE IN ± % VOLTS

TEMPTRONIC CORP.

SCHEMATIC
POWER CONT.

SIZE	CODE IDENT NO.	DRAWING NO.	REV
D		4124	D

SCALE 1/4 SHEET 1 OF 1

FOTOBEAM/BROOKSIDE 0228-D

REVISIONS				
ZONE	LTR	DESCRIPTION	DATE	APPROVED
	B	REVISED PER ECN#2390	3-22-84	JC
	C	REVISED PER ECN#2463	7-11-84	BD
	D	REVISED PER ECN #2477	7-24-84	Jim C
	E	REVISED PER ECN # 2490	8-7-84	OCB
	F	REVISED PER ECN 2565 (P/L ONLY)	10-31-84	M.O.
	G	REVISED PER ECN 2580	11-9-84	M.O.
	H	REVISED PER ECN 2591	12-6-84	M.O.
	J	REVISED PER ECN 2653	3-14-85	M.O.
	K	REVISED PER ECN # 3036	4-86	PB
	L	REVISED PER ECN # 4072	7-30-86	PB
	M	REVISED PER ECN # 4072M	8-14-86	PB
	N	REVISED PER ECN # 4072N (P/L ONLY)	10-19-87	MJM

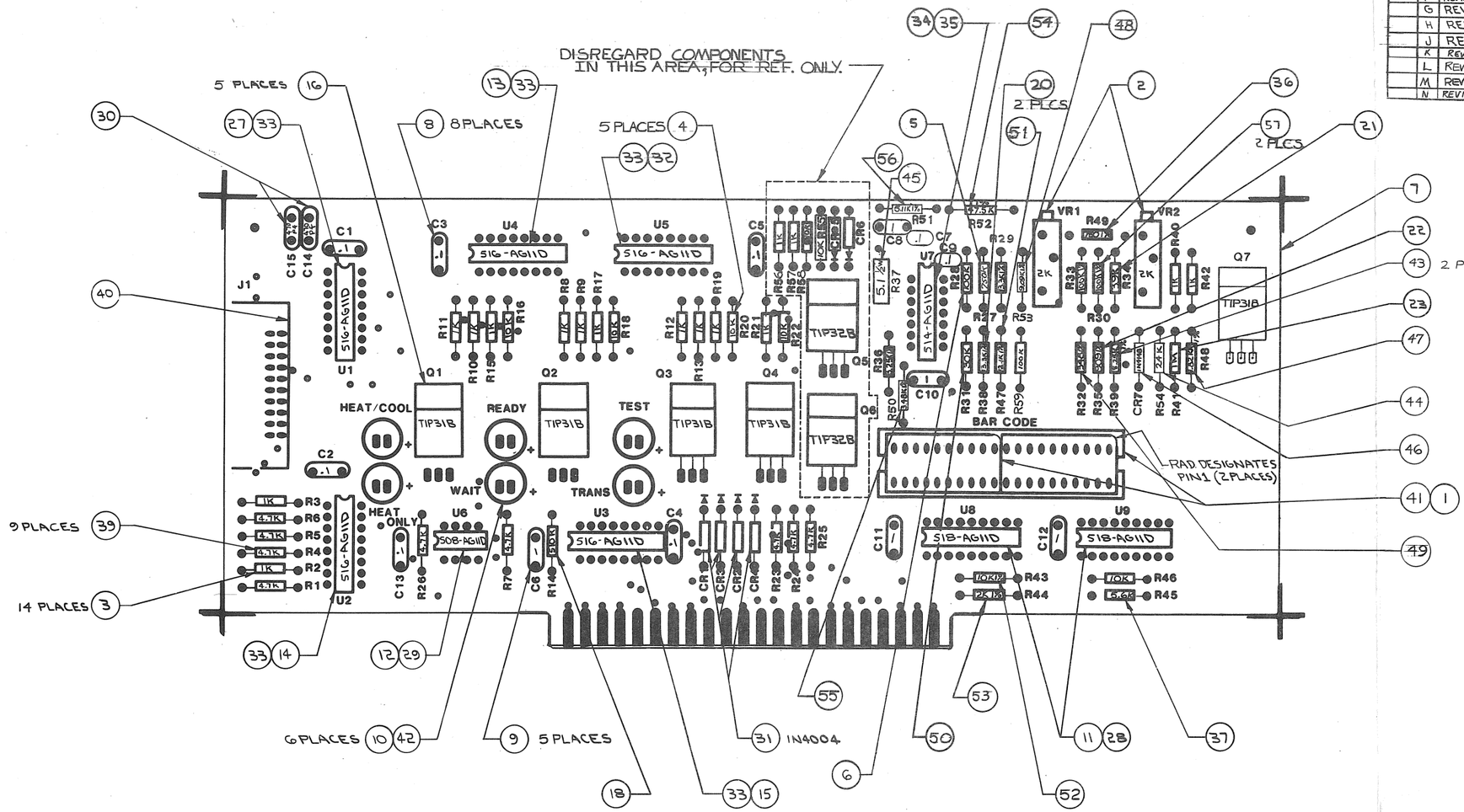

NOTES:
1. TO BE BAGGED BY VENDOR / ASSEMBLER.

Section 7	LM324N	TL084CN			
2171	TIP31B	TIP32B			
NEXT ASSY	USED ON	SYSTEM			
APPLICATION					

UNLESS OTHERWISE SPECIFIED DIMENSIONS ARE IN INCHES
TOLERANCES ARE:
FRACTIONS ± 1/64 DECIMALS .XX ± .015 .XXX ± .005 ANGLES ± 30'

MATERIAL

FINISH

DO NOT SCALE DRAWING

TEMP STOCK NO	NOMENCLATURE OR DESCRIPTION	MFG PART NO	ITEM
	PARTS LIST		

CONTRACT NO.

TEMPTRONIC CORP.

APPROVALS	DATE
DRAWN B. DELPRETE	3-15-84
CHECKED Jim C	7-24-84
ENG Jim C	7-24-84

FRONT PANEL BOARD ASSY (SHT 3 ARTWORK)

UNLESS OTHERWISE SPECIFIED RESISTANCE VALUES ARE IN OHMS: 5 % 1/4 WATT CAPACITANCE VALUES ARE IN µF: 20 % VOLTS

SIZE	CODE IDENT NO.	DRAWING NO.	REV
D		4072-3	N

SCALE 2:1 SHEET OF

REVISIONS				
ZONE	LTR	DESCRIPTION	DATE	APPROVED
	E	ECO 3R1	7/86	

REV.	ECN.NO	DATE
E	3121	7/10/86

REF.ONLY

R8 1K READY
R9 1K WAIT
R10 1K HEAT ONLY
R11 1K HEAT/COOL
R12 1K TEST
R13 1K TRNSN
4049UB U4 · 4050B U5 · 4049UB U4 · 4090B U5 · 4050B U9

R58 10K · R57 1K · Q5 TIP32B · CR6 1N4004 · R55 10K · R56 1K · Q6 TIP32B · CR5 1N4004

CR4 1N4004 · CR2 1N4004 · CR3 1N4004 · CR1 1N4004

+12VDC

J1

R1 4.7K · R2 1K · R3 1K · R4 4.7K · R5 4.7K · R6 4.7K

C1 .1 · C14 470PF · C15 · C2 .1 · C3 .1 · C5 .1

U1 4099B
9 SAFETY
10 TEST
11 TRANSITION
12 COMP.#1
13 COMP.#2
14 STAND
15 WAIT/READY
1 DRIER

U2 4512B
1 LOW FLOW
2 SAFETY RTN
3 MODE
4 STAND
5 FOOT SW ENABLE
6 FOOT SW
7 SPARE
9 SPARE

R7 4.7K · U6 40107B

U3 4049BB · R14 510K · C4 .1 · C6 1 · C13 .1 · R26 4.7K · U6 40107B

U4 4049UB

R50 3.48K 1% · R31 30K · R53 9.09K 1% · C10 1 · R36 8.25K 1% · C9 .1 · R27 750K · R47 12.1K 1% · R49 750 1% · VR2 2K · R30 100K 1% · R33 100K 1% · R35 909 1% · C8 1 · R37 * 5.1 1/2W · R28 100K · TIP31B Q7 · R51 5.11K 1% · R52 47.5K 1% · R59 100K · VR1 2K · R29 13.3K 1% · C7 .1 · R38 13.3K 1% · R32 348 1% · CR7 1N4148 · R54 24K · R34 39K · R39 8.25K 1% · R40 1K · R48 1.82K 1% · R41 1M · R42 1K · LM324 U7

2CFM · 12CFM

MV57164 · MV57164

U8 LM3914 · U9 LM3914

C11 1 · C12 1

R43 10K 1% · R44 2K 1% · R45 5.6K · R46 10K

U5 4050B
R15 1K · R16 10K · Q1 TIP31B
R17 1K · R18 10K · Q2 TIP31B
R19 1K · R20 10K · Q3 TIP31B
R21 1K · R22 10K · Q4 TIP31B

R23 4.7K · R24 4.7K · R25 4.7K

+12VDC
1/A
B/C
11/M
16/T
20/X
F
6
15 TEST AIR RELAY
5 TRANSITION AIR RELAY
9 COMP #1
K COMP #2 RELAY
10 STAND SOLENOID
L DRIER SOLENOID
LOW=HEAT ONLY
13 MODE SWITCH
P STAND SWITCH
N FOOT SW ENABLE
12 FOOT SWITCH
E HEATER RELAY

J2
2/B
4/D
8/J
14/R
17/U
21/Y
22/Z
GROUND

PART OF J2

NOTE:
* USE METAL OXIDE FILM ONLY

TEMP. STOCK NO.	NOMENCLATURE OR DESCRIPTION	MFG. PART NO.	ITEM
	PARTS LIST		

UNLESS OTHERWISE SPECIFIED DIMENSIONS ARE IN INCHES
TOLERANCES ARE:
FRACTIONS ± 1/64 · DECIMALS .XX ± .01, .XXX ± .005 · ANGLES ± 30'

MATERIAL

FINISH

DO NOT SCALE DRAWING

NEXT ASSY	USED ON	SYSTEM
APPLICATION		

CONTRACT NO.

TEMPTRONIC CORP.

APPROVALS	DATE
DRAWN B DELPRETE	7-25-84
CHECKED	
ENG	

SCHEMATIC
FRONT PANEL BRD

UNLESS OTHERWISE SPECIFIED
RESISTANCE VALUES ARE IN OHMS ± % WATT
CAPACITANCE VALUES ARE IN ± % VOLTS

SIZE	CODE IDENT NO.	DRAWING NO.	REV
D		3997	E

SCALE 1) /A · SHEET 1 OF 1

FOTOBEAM/BROOKSIDE 0228-D

REVISIONS				
ZONE	LTR	DESCRIPTION	DATE	APPROVED
	A	RELEASED	3-22-84	JC
	B	REVISED PER ECN 2469	7/19/84	H.O
	C	REVISED PER ECN # 2607	1-10-85	MAP
	D	ECN # 2679	5-2-85	JC
	E	REVISED PER ECN # 2728	6-18-85	JC
	F	REVISED PER ECN 2924	1/86	PB

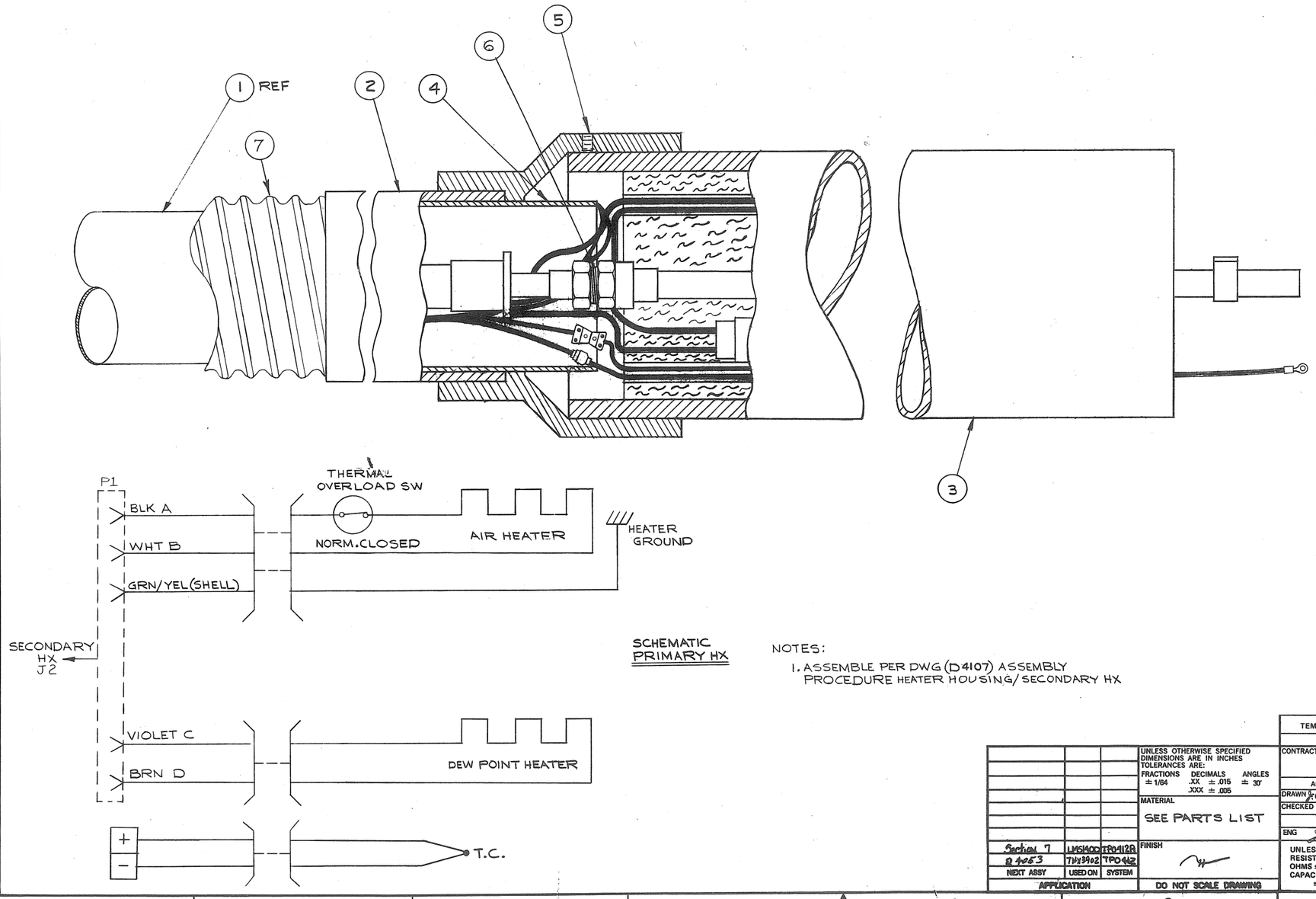

SCHEMATIC PRIMARY HX

NOTES:

1. ASSEMBLE PER DWG (D4107) ASSEMBLY PROCEDURE HEATER HOUSING/SECONDARY HX

TEMP. STOCK NO.	NOMENCLATURE OR DESCRIPTION	MFG. PART NO.	ITEM

PARTS LIST

NEXT ASSY	USED ON	SYSTEM
Section 7	LMS140D	TP0412A
D 4053	THX3902	TP0412

APPLICATION

UNLESS OTHERWISE SPECIFIED DIMENSIONS ARE IN INCHES TOLERANCES ARE:
FRACTIONS ± 1/64 DECIMALS .XX ± .015 .XXX ± .005 ANGLES ± 30'

MATERIAL: SEE PARTS LIST

FINISH

DO NOT SCALE DRAWING

CONTRACT NO.

APPROVALS	DATE
DRAWN J.C. Henderson	1-12-84
CHECKED Jim C	2-22-84
ENG Jim C	2-22-84

UNLESS OTHERWISE SPECIFIED RESISTANCE VALUES ARE IN OHMS ± % WATT CAPACITANCE VALUES ARE IN ± % VOLTS

TEMPTRONIC CORP.

HEATER HOUSING/SECONDARY HX. ASSEMBLY

SIZE	CODE IDENT NO.	DRAWING NO.	REV
D		3902	F

SCALE 1½" = 1" SHEET 1 OF 1

REVISIONS				
ZONE	LTR	DESCRIPTION	DATE	APPROVED
	A	RELEASED	3-29-84	JC
	B	ECN # 2679	5-2-85	JC

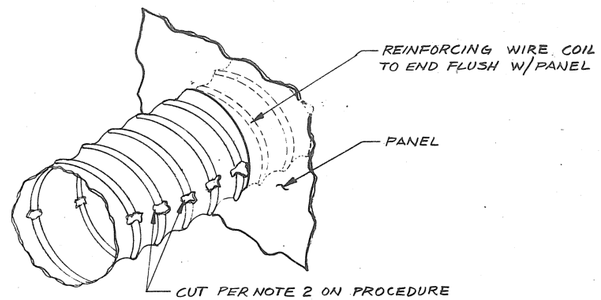

DETAIL "A"
NO SCALE

TEMP. STOCK NO.	NOMENCLATURE OR DESCRIPTION	MFG. PART NO.	ITEM
	PARTS LIST		

Section 8	LM8M60TT04120	
D3902	TM1X902	TF04X2
NEXT ASSY	USED ON	SYSTEM
APPLICATION		

UNLESS OTHERWISE SPECIFIED DIMENSIONS ARE IN INCHES
TOLERANCES ARE:
FRACTIONS ± 1/64 DECIMALS .XX ± .015 .XXX ± .005 ANGLES ± 30'
MATERIAL
FINISH
DO NOT SCALE DRAWING

CONTRACT NO.

TEMPTRONIC CORP.

APPROVALS	DATE
DRAWN F.C. Henderson	2-1-84
CHECKED Jim C.	2-22-84
ENG Jim C.	2-22-84

ASSEMBLY PROCEDURE
HEATER HOUSING / SECONDARY HX
(SHT. 2 IS A4107)

UNLESS OTHERWISE SPECIFIED RESISTANCE VALUES ARE IN OHMS ± % WATT
CAPACITANCE VALUES ARE IN ± % VOLTS

SIZE	CODE IDENT NO.	DRAWING NO.	REV
D		4107	B

SCALE NONE SHEET 1 OF 2

ZONE	LTR		DATE	
	A	INITIAL RELEASE PER ECO [illegible]	[illegible]	[illegible]
	B	ECN 3096 2/ST ONLY	6/86	[illegible]
	C	REV PER ECO# 4749C PIL ONLY	9-10-86	[illegible]
	D	REV PER ECO # 4749D	10[illegible]	[illegible]
	E	REV ECO 4749E	7.27.87	[illegible]

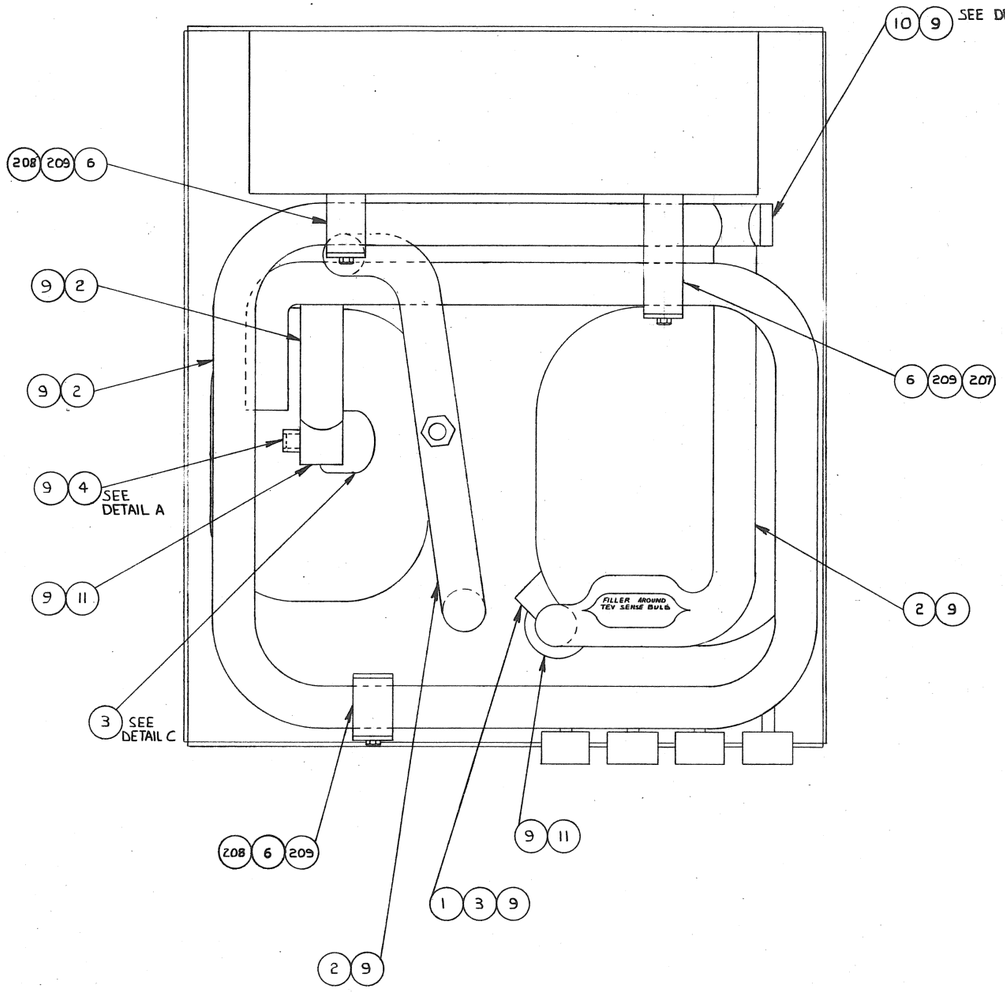

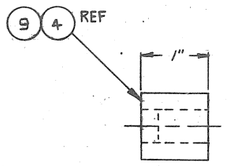

DETAIL A

NOTE : REMOVABLE COVER, CAP END & CEMENT USING (9), DO NOT GLUE TO VALVE

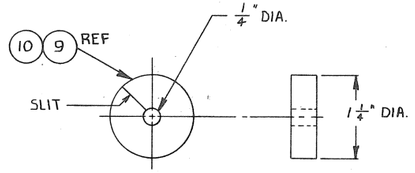

DETAIL B

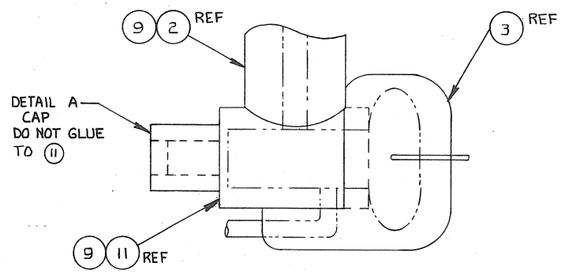

DETAIL C

NOTE : USE ITEM (3) TO COVER END OF VALVE

NOTE :
INSULATION ASS'Y = SHEET 1
ELECTRICAL ASS'Y = SHEET 2

TEMP. STOCK NO.	NOMENCLATURE OR DESCRIPTION	MFG. PART NO.	ITEM
	PARTS LIST		

UNLESS OTHERWISE SPECIFIED DIMENSIONS ARE IN INCHES
TOLERANCES ARE:
FRACTIONS ± 1/64 DECIMALS .XX ± .01 .XXX ± .005 ANGLES ± 30'

MATERIAL: SEE PARTS LIST

FINISH

DO NOT SCALE DRAWING

UNLESS OTHERWISE SPECIFIED RESISTANCE VALUES ARE IN OHMS ± % WATT
CAPACITANCE VALUES ARE IN ± % VOLTS

CONTRACT NO.

TEMPTRONIC CORP.

APPROVALS	DATE
DRAWN [illegible]	4-29-86
CHECKED PEB	6-6-86
RMS	5-6-86
ENG	

INSULATION / ELECTRICAL ASSEMBLY

SIZE D | CODE IDENT NO. | DRAWING NO. 4749 | REV E

SCALE HALF | SHEET 1 OF 2

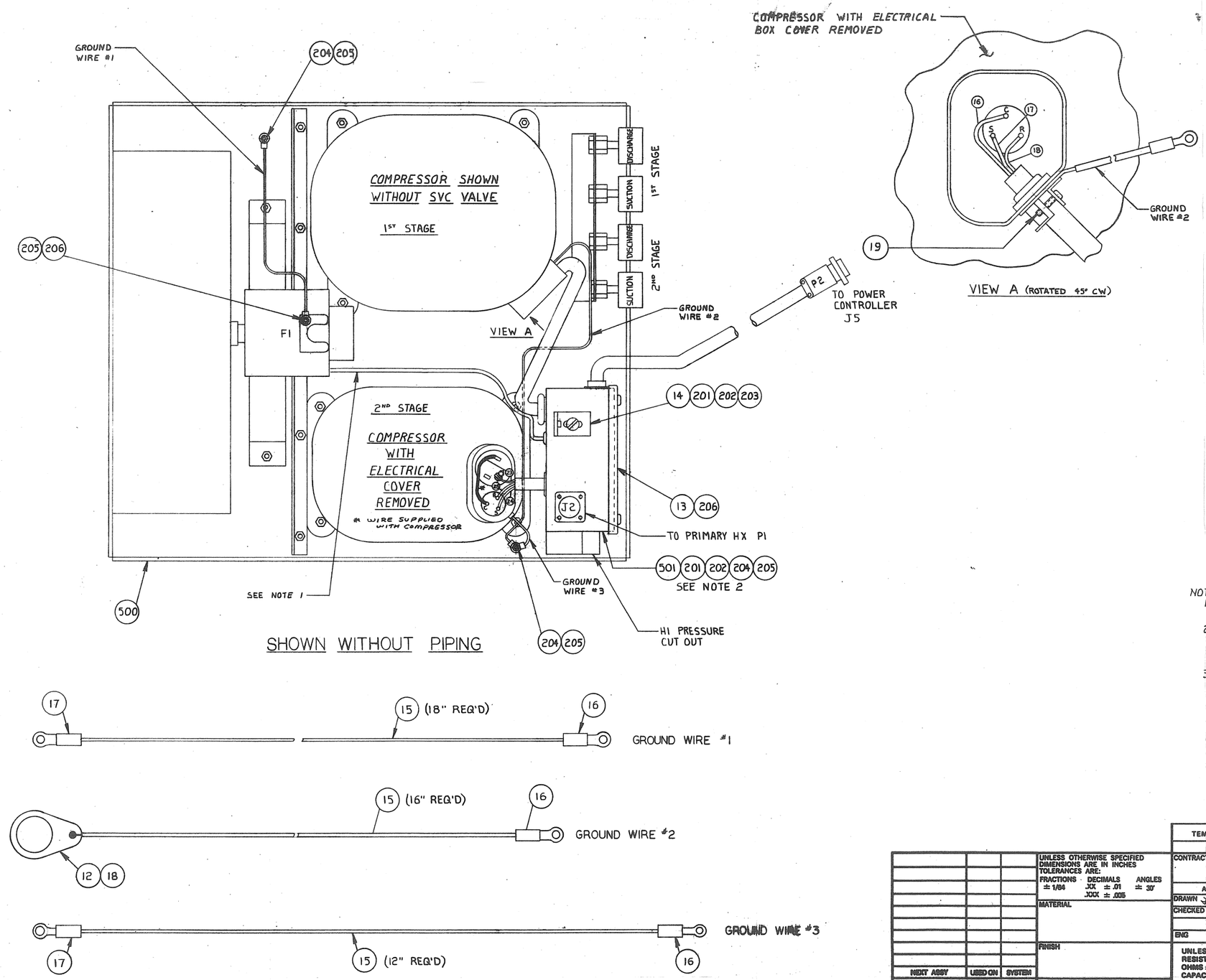

NOTES:
1. WIRE FAN MOTOR THRU CLAMP ON REAR OF ELECTRICAL BOX TO 1 & 2 OF TERMINAL STRIP.
2. CONNECT GROUND WIRE OF ELECTRICAL BOX TO GROUND STUD LOCATED IN BOTTOM OF BOX CUTOUT USING 204 & 205.
3. REFERENCE SCHEMATIC D4754

REVISIONS				
ZONE	LTR	DESCRIPTION	DATE	APPROVED

TEMP. STOCK NO.	NOMENCLATURE OR DESCRIPTION	MFG. PART NO.	ITEM
	PARTS LIST		

UNLESS OTHERWISE SPECIFIED DIMENSIONS ARE IN INCHES TOLERANCES ARE:
FRACTIONS ± 1/64 DECIMALS .XX ± .01 .XXX ± .005 ANGLES ± 30'

MATERIAL

FINISH

DO NOT SCALE DRAWING

NEXT ASSY	USED ON	SYSTEM
APPLICATION		

CONTRACT NO.

APPROVALS		DATE
DRAWN	J.M. Riley	5-1-86
CHECKED	PEB	5-6-86
	RMS	5-6-86
ENG		

UNLESS OTHERWISE SPECIFIED RESISTANCE VALUES ARE IN OHMS ± % WATT CAPACITANCE VALUES ARE IN ± % VOLTS

TEMPTRONIC CORP.

INSULATION / ELECTRICAL ASSEMBLY

SIZE	CODE IDENT NO.	DRAWING NO.	REV
D		4749	E

SCALE HALF SHEET 2 OF 2

REVISIONS				
ZONE	LTR	DESCRIPTION	DATE	APPROVED
	A	INITIAL RELEASE PER ECO 3032	5-15-86	PB

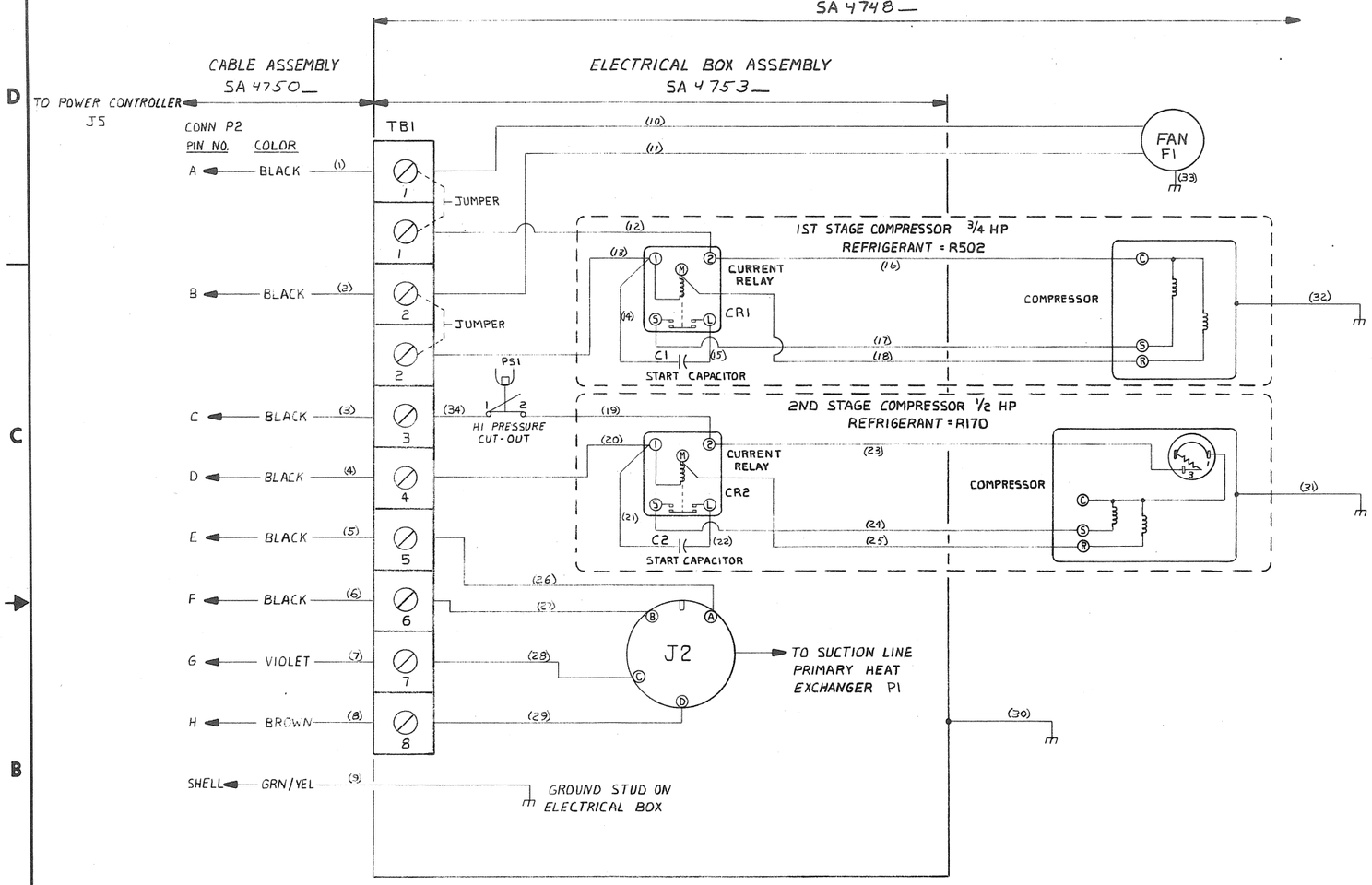

NOTES:
1. (XX) = WIRE NUMBERS
2. WHEN TERMINAL STRIP IS INSTALLED IN ELECTRICAL ENCLOSURE THE TERMINAL SEQUENCE RUNS FROM BOTTOM TO TOP

			UNLESS OTHERWISE SPECIFIED DIMENSIONS ARE IN INCHES TOLERANCES ARE: FRACTIONS ± 1/64 DECIMALS .XX ± .01 .XXX ± .005 ANGLES ± 30'
			MATERIAL —
			FINISH —
SA4753		412	
NEXT ASSY	USED ON	SYSTEM	
APPLICATION			DO NOT SCALE DRAWING

TEMP. STOCK NO.	NOMENCLATURE OR DESCRIPTION	MFG. PART NO.	ITEM
	PARTS LIST		

CONTRACT NO.

TEMPTRONIC CORP.

APPROVALS	DATE
DRAWN [illegible]	4-3-86
CHECKED PEB	5-6-86
RMS	5-6-86
ENG	

SCHEMATIC
SECONDARY HX

UNLESS OTHERWISE SPECIFIED RESISTANCE VALUES ARE IN OHMS ± % WATT
CAPACITANCE VALUES ARE IN ± % VOLTS

SIZE	CODE IDENT NO.	DRAWING NO.	REV
D		4754	A

SCALE — SHEET 1 OF 1

FOTOSEAM/BROOKSIDE 0225-D

SECTION 8
APPENDICES

8-1 APPENDIX INTRODUCTION

This section of the manual contains such additional information as warranty, available options/accessories, and application notes for the Model TP0412A ThermoStream System.

Appendix A — Provides a copy of Temptronic Corporation's standard Warranty. This is the only warranty recognized by Temptronic.

Appendix B — Has been reserved for all the options/accessories. The user must identify which if any apply to any given system. Illustrations are provided for assistance.

Appendix C — Has been reserved for application notes and user hints to optimize the system operation.

Appendix D — Contains user registration cards and system operation procedure hang tags.

Appendix E — Provides a listing of Service and Sales Representatives.

Warranty

Temptronic Corporation warrants all equipment of its manufacture to be free from defects in materials and workmanship for a period of one year from date of shipment to the original buyer. The liability under this warranty is limited to replacement parts and labor on equipment when, with prior authorization from Temptronic, it is returned prepaid to the factory and when, upon examination by Temptronic, it is determined to be defective. All costs incurred in shipping the equipment or parts thereof are the responsibility of the buyer. Our warranty for this instrument is *rendered void* if the unit has been repaired, taken apart or modified, or attempted to be, unless such actions have been taken in accordance with written instructions received from Temptronic. The warranty is also void if the equipment has been subjected to abuse, accident, or other abnormal conditions.

IF ANY FAULT DEVELOPS
THE FOLLOWING STEPS SHOULD BE TAKEN:

A. Notify Temptronic, giving full details of the difficulty, and include the model number and serial number of the equipment. On receipt of this information, service data or shipping instructions will be given. Do not return unit for repair without first contacting factory or sales representative for instructions.

B. On receipt of shipping instructions, forward the instrument prepaid to the factory. If requested, an estimate of the charges will be made before the work begins, in cases where the instrument is not covered by the warranty.

C. If the original carton and packing are not available, the instrument should be packed in a strong exterior container and surrounded by two or three inches of excelsior or similar shock-absorbing material. We advise that returned equipment should be declared at full value to the carrier.

Temptronic Corporation reserves the right to make changes in design at any time without incurring any obligation to install same on units previously purchased.

This warranty states the essence of the obligations or liabilities on the part of Temptronic Corporation. THE FORMAL, COMPLETE, AND EXCLUSIVE STATEMENT OF TEMPTRONIC CORPORATION'S WARRANTY IS CONTAINED IN ITS QUOTATIONS, ACKNOWLEDGMENTS, AND INVOICES. Temptronic Corporation neither assumes, nor authorizes any person to assume for it any liability in connection with the sale of its equipment other than those set forth therein.

APPENDIX B
Options/Accessories

Though the basic Model TP0412A ThermoStream System as supplied is complete, and realizing that each user's application of the system may vary, several options and accessories are available to configure the standard system to meet those requirements.

A separate section is devoted here to those enhancements, see list below, which are considered either complex or stand alone assemblies.

Appendix	Options/Accessories	Part Number
B-1	Floor Stand	ZHS 42750
B-1	Floor Stand Remote Foot Switch	ZAK 39780
B-2	Air Dryer	ZAD 40520
B-2	Air Filter Assembly	ZAD 40510
B-3	Single Wall ThermoCap Kit	ZAK 42550
B-3	Small Double Wall Kit	ZAK 42540
B-3	Large Double Wall	ZAK 42480
B-3	PCB Enclosure	ZSA 42890
B-3	MiniHandler	Not Assigned
B-4	Shroud Enclosures	See Appendix
B-4	Insulation Kits	See Appendix
B-5	Remote Control Assembly	SA 36100
B-6	Buck Boost Transformer	See Appendix
B-7	Single Select Module	SA 35900
B-7	Five Select Module	SA 32160
B-8	IEEE Interface	ZMK 43790
B-9	BCD Interface	ZMK 43800
B-10	DUT Control Option	ZRM 42180

These features maybe added at any time to the system after manufacture. Some may require returning the system to the factory for modification.

APPENDIX B-1
TP0412A THERMOSTREAM STAND

B-1.1 INTRODUCTION

A floor stand consisting of; a castered base plate, flanged VERTICAL POST and HORIZONTAL ARM is offered as an option/accessory to the ThermoStream TP0412A Thermal Inducing System.

The stand supports the WAND (Primary Heat Exchanger) and facilitates positioning/interfacing to the tester. In addition, it accommodates the entire system and options creating a self contained easily moved unit.

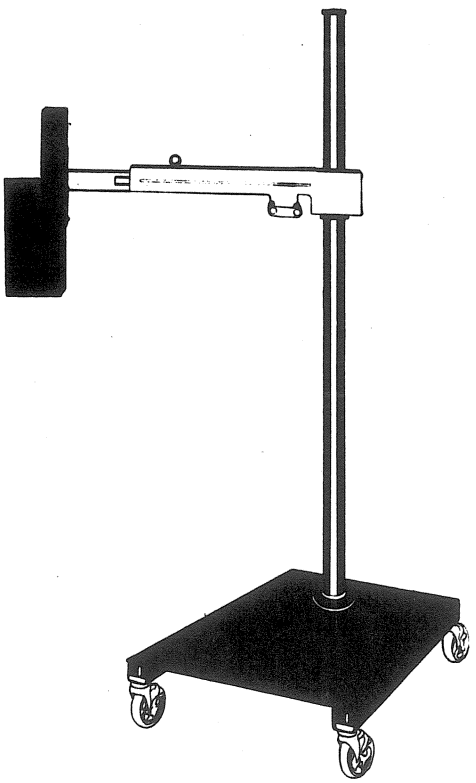

Figure B-1.1. Floor Stand

B-1.2 STAND ASSEMBLY

For assembly instructions, refer to drawing D4177 (P/N LMS1110). The base plate and HORIZONTAL ARM are shipped in the same container as the system with the VERTICAL POST shipped separately.

Care should be taken not to stress the SUCTION LINE assembly during this operation. The WAND LOCKS should be released during this operation. There should not be any sharp bends, kinks or twist in the SUCTION LINE assembly.

The stand requires both gas and electrical sources which are available from the power controller. Make these two (2) connections to the appropriate Power Controller back panel receptacles using the hose and cable supplied.

If the optional REMOTE FOOT switch was purchased, the mating connector is located underneath the HORIZONTAL ARM directly opposite the HORIZONTAL ARM SLIDE-LOCK (red ball knob). When the REMOTE FOOT switch is plugged into the stand, the LIFT/LOWER switches on the pneumatic piston housing remain operational.

An ENCLOSURE AIR SUPPLY PORT is provided on the stand to accept the small barbed fitting and hose included with the double walled ThermoCaps. Originally, it was located in the vicinity of the REMOTE FOOT switch connector. In later designs, it was moved to the rear of the pneumatic piston housing. This port is generally capped for shipment.

NOTE

DISCONNECT AIR SUPPLY BEFORE REMOVING CAP.

REVISIONS				
ZONE	LTR	DESCRIPTION	DATE	APPROVED
	D	ECN NO 4177D	3-1-86	

REV.	ECN.NO	DATE
A	REL.	7-24-84
B		
C	2607	1-10-85
D	4177D	9-11-86

NOTES

1. ATTACH POST FLANGE ASSY.TO STAND BASE ASSY.AS SHOWN WITH 4 BOLTS, NUTS AND WASHERS SUPPLIED.
2. (OPTIONAL) MOUNT AIR DRYER TO POST AS SHOWN WITH CLAMPS AND HARDWARE SUPPLIED WITH AIR DRYER, TOP OF DRYER EVEN WITH TOP OF CONTROLLER CABINET.
3. MOUNT TOP ARM ASSEMBLY ON POST AS SHOWN.
4. INSTALL PLASTIC CAP ON TOP OF POST AS SHOWN.
5. SLIDE HEATER ASSY.INTO TOP ARM AS SHOWN AND TIGHTEN NYLON SCREWS.
6. REMOVE ONE HALF OF SUCTION LINE SUPPORT CLAMP (BLUE CLAMP ON SIDE OF TOP ARM) POSITION SUCTION LINE IN CLAMP APPROXIMATLY 14"TO 16"ABOVE TOP ARM ASSY. (GRADUAL BEND) RE-ATTACH CLAMP HALF AND TIGHTEN.
7. ATTACH ENCLOSURE TO HEATER ASSEMBLY WITH 2-SCREWS AND WASHERS SUPPLIED, RECOMMEND VENT HOLE BE POSITIONED TOWARD REAR OF UNIT AWAY FROM OPERATOR (6-POSITIONS AVAILABLE)
8. PUSH DESIRED RUBBER SHROUD OVER NOZZLE IN ENCLOSURE
9. REFER TO MANNUAL FOR AIR AND ELECTRICAL CONNECTIONS AND SYSTEM/STAND OPERATION.

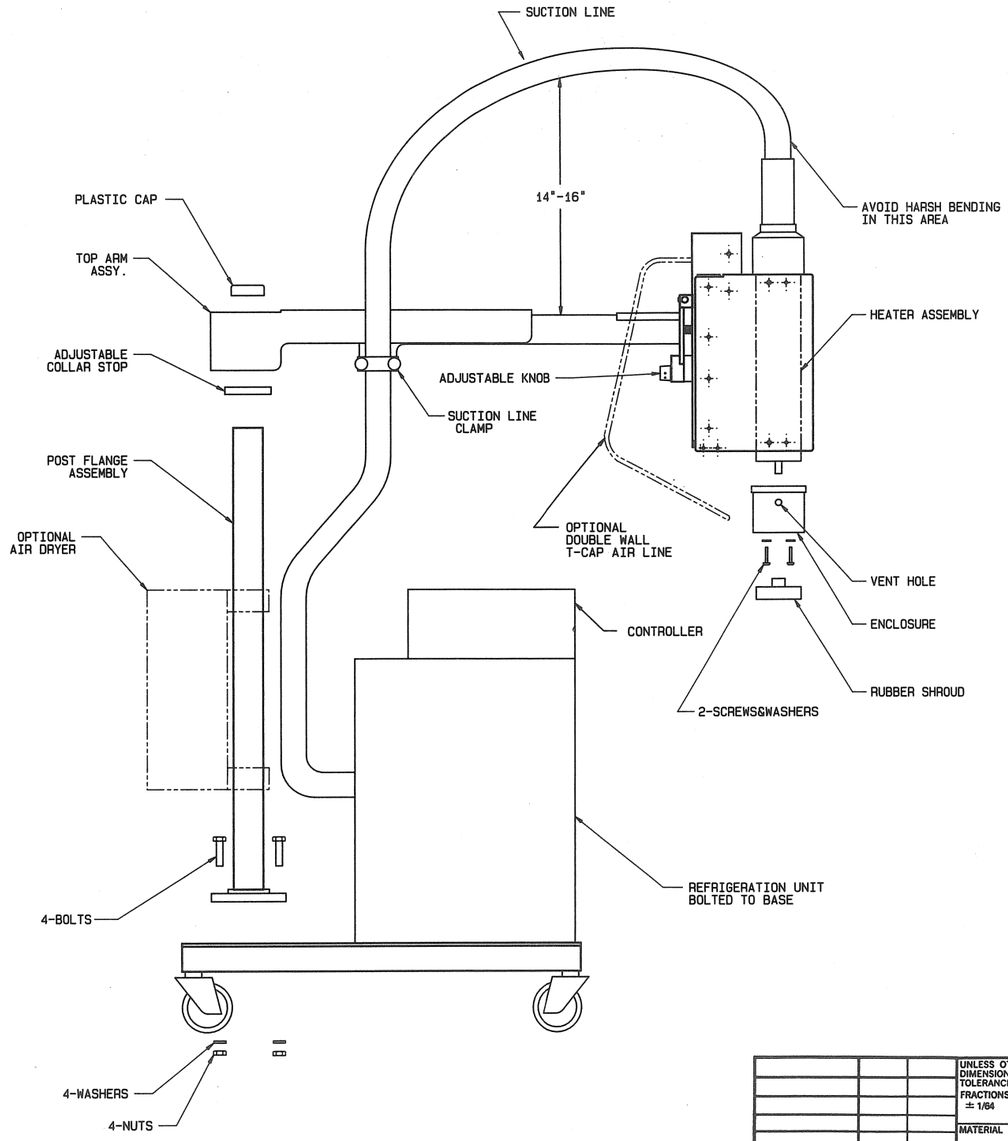

TEMP. STOCK NO.	NOMENCLATURE OR DESCRIPTION	MFG. PART NO.	ITEM
	PARTS LIST		

APPENDIX B-1	LMS1HEC	TPA12A
D 3866	ZHS3866	TPA12A
NEXT ASSY	USED ON	SYSTEM

APPLICATION

UNLESS OTHERWISE SPECIFIED DIMENSIONS ARE IN INCHES
TOLERANCES ARE:
FRACTIONS ± 1/64 DECIMALS .XX ± .01 .XXX ± .005 ANGLES ± 30'

MATERIAL: N/A

FINISH: N/A

DO NOT SCALE DRAWING

CONTRACT NO.

TEMPTRONIC CORP.

APPROVALS	DATE
DRAWN J WOODMAN	7-24-84
CHECKED	
ENG	

STAND INTEGRATION PROCEDURE
(LMS1HEC)

UNLESS OTHERWISE SPECIFIED RESISTANCE VALUES ARE IN OHMS ± % WATT
CAPACITANCE VALUES ARE IN ± % VOLTS

SIZE	CODE IDENT NO.	DRAWING NO.	REV
D		4177	D

SCALE 3/8 SHEET 1 OF 1

FOTOBEAM/BROOKSIDE 0228-D

B-1.3 STAND FEATURES

Refer to Figure B-1.2 and the following table to become familiar with the stand's features and controls.

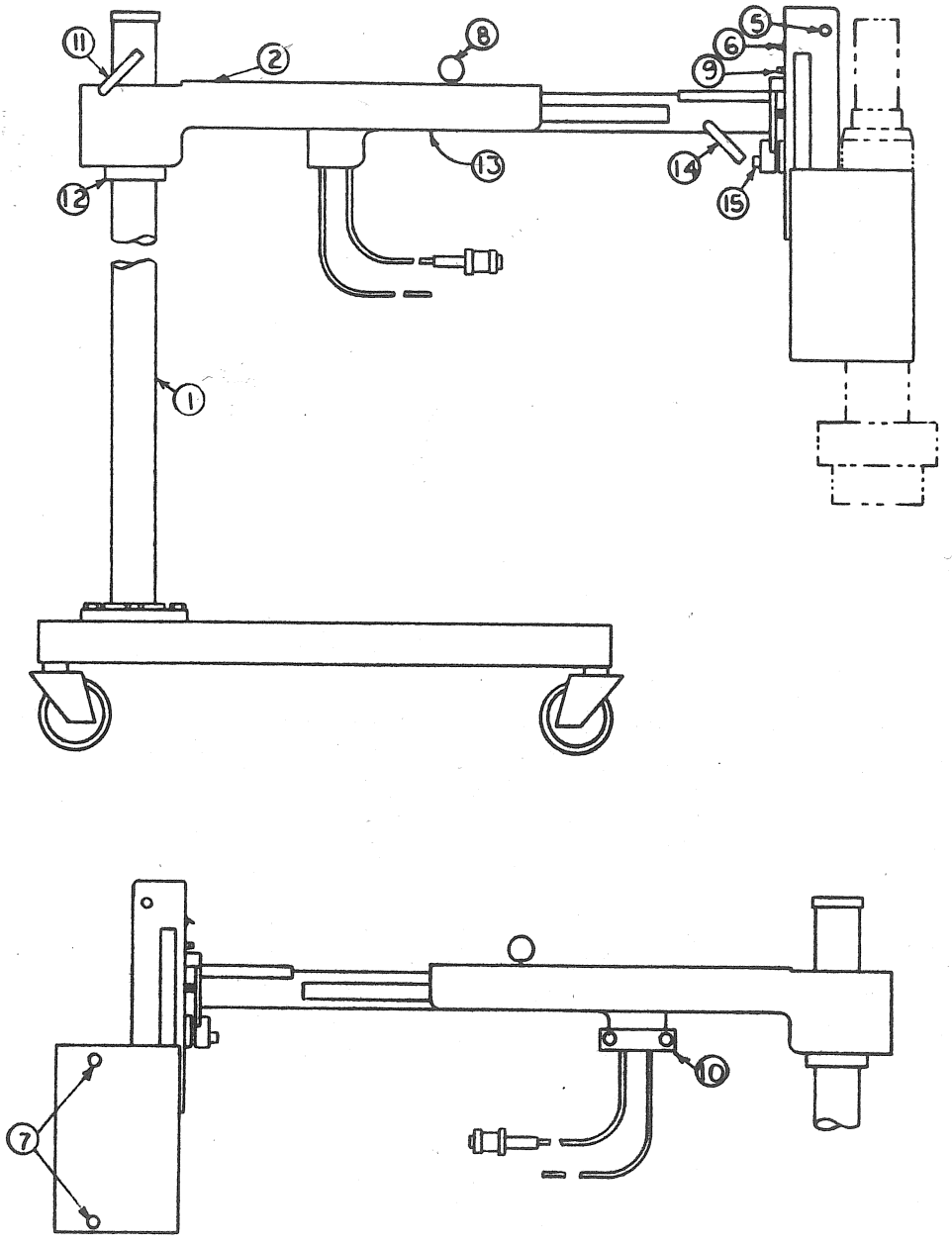

Figure B-1.2. Stand Features and Controls.

B-1.3 STAND FEATURES (cont.)

Item	Designation	Function	Explanation
1	VERTICAL POST	Supports the HORIZONTAL ARM and optional gas dryer.	This is a fixed support which allows the HORIZONTAL ARM to pivot and be adjusted to different tester heights.
2	HORIZONTAL ARM	Supports the primary heat exchanger and pneumatic piston assembly.	Allows the primary to be rotated 180° from a vertical position and an in/out travel of about 15 inches with a 6 inch up/down stroke.
* 3	DOWN PRESSURE regulator (see fig. B-1.3 & B-1.4)	Allows adjustment of the gas piston pressure against the tester surface.	Offers manual control of the gas piston supply pressure which enables the user to seal the ThermoCap against the insulated tester surface and prevent cold gas leakage and resultant condensation.
** 4	DOWN SPEED control (see fig. B-1.3 & B-1.4)	Allows adjustment of the piston down speed.	Offers manual setting of the gas valve which controls the down-speed of the gas piston. This allows the user to align the ThermoCap and component enclosure by slowing the descent and making the necessary adjustments.

* This control has been replaced by a pressure regulator (R1), factory preset to 30psig., located in the Power Controller.

** This control has been replaced by a fixed orifice and a JOG switch (see Item 6) has been provided.

Item	Designation	Function	Explanation
5	LIFT/LOWER switch (2 places)	Provides means to select either the raised or lowered position of the primary.	Momentary push button switches (one on either side of the pneumatic piston housing) which can be manually switched to either "lift" or "lower" the primary and ThermoCap.
6	JOG switch (only on '85 stand)	Provides means to stop descent of the WAND.	Toggle switch which allows the downward motion of the WAND to be interrupted for aligment of the shrouds and WAND over the test site.
7	WAND LOCKS (2 places)	Prevent the primary from rotating.	When turned clockwise, the friction on the primary pivot bar increases. These locks should be released when the horizontal arm is being positioned in order to prevent stress in the primary SUCTION LINE, and they should be locked when the horizontal arm is in position for testing so that the ThermoCap alignment remains fixed.
8	HORIZONTAL ARM SLIDE LOCK	Secures the HORIZONTAL ARM in/out position.	When turned clockwise it tightens against the HORIZONTAL SLIDING ARM wear bar.
9	ENCLOSURE AIR SUPPLY PORT	Supply air for double wall ThermoCap walls or windows in the optional MINIZONE or MINIDOME.	Barbed hose fitting to accept ThermoCap or window air supply hose. This air prevents or minimizes condensation in most cases on the surfaces during low temperature operation.

Item	Designation	Function	Explanation
10	SUCTION LINE SUPPORT BRACKET	Relieve undesired stresses on the SUCTION LINE assembly.	This bracket clamps the SUCTION LINE assembly to either side of the stationary part of the HORIZONTAL ARM to support the weight of the line. It also pivots allowing the line to follow the primary.
11	HORIZONTAL ARM ROTATION LOCK	Prevents HORIZONTAL ARM from rotating on VERTICAL POST after positioning.	When turned clockwise increases friction on VERTICAL POST securing HORIZONTAL ARM position.
12	RETAINING COLLAR	Used as a stop to set the height and support the weight of the HORIZONTAL ARM on the VERTICAL POST.	Split ring-type clamp which can be securely tightened against the VERTICAL POST to support the end of the HORIZONTAL ARM. This prevents any accidental slippage of the HORIZONTAL ARM.
13	REMOTE switch receptacle	Accepts optional foot switch.	This connector parallels the Lift/ Lower switch allowing a REMOTE switch to be used to lift/lower the primary.
14	HEAD ROTATION LOCK	Maintain HEAD/WAND position.	When turned clockwise increases friction on pivot shaft.
***15	WAND ALIGNMENT adjustment	Allows for perpendicular alignment of the WAND to the test fixture.	Turning the knob counter clockwise tilts the pneumatic piston housing away from the HORIZONTAL ARM (max. deflection is approx. 10°).

*** This adjustment was supplied on the stand shipped with system serial number 8607391 and all subsequent stands. An upgrade/modification kit (P/N CS4895) is available from the Service Department to retrofit previously shipped stands.

B-1.3.1 STAND OPTIONS

Item	Designation	Function	Explanation
1	IEEE-488	Allows automatic (computer) up/down control of the primary.	If this option has been added to the system, the up/down action of the primary can be controlled by software.
2	REMOTE FOOT switch	Allows remote up/down manual control of the primary.	If this option has been added to the stand, the up/down action of the primary can be controlled by an electrical REMOTE FOOT switch. The switch may be either foot or hand operated. When connected, this switch compliments the LIFT/LOWER switches (see item 5).

B-1.4 STAND INSTALLATION

Ideally, the VERTICAL POST should be as close as possible to the test site to minimize extending the HORIZONTAL ARM thus reducing the moment on the arm. However, the stand has been made to operate at its full extension without difficulty. Refer to drawing D4275 for illustration of the stand's flexibility.

The HORIZONTAL ARM height should be adjusted so the piston has approximately one (1) inch of travel left when the ThermoCap is in the down-position making contact with the tester interface. The RETAINING COLLAR and HORIZONTAL ARM ROTATION LOCK, should both be used to maintain the desired position.

NOTE: The WAND LOCKS should be released before extending the HORIZONTAL ARM or adjusting its height. The LOCKS should be tightened when re-positioning is complete.

When positioning the HORIZONTAL ARM;

a) retract and secure the HORIZONTAL ARM using the SLIDE LOCK
b) support the arm assembly in the area of the SUCTION LINE SUPPORT BRACKET with one hand
c) loosen the HORIZONTAL ARM ROTATION LOCK and RETAINING COLLAR
d) with both hands move the entire assembly to the desired height
e) secure in place using both locking mechanisms, as previously mentioned
f) loosen the HORIZONTAL ARM SLIDE LOCK
g) adjust and secure arm length so the ThermoCap is properly positioned over the test site
h) use the WAND LOCKS to secure the primary and ThermoCap into position

This should complete the positioning of the stand/primary to the tester.

REVISIONS				
ZONE	LTR	DESCRIPTION	DATE	APPROVED
	E	PER ECN 4275E	9-11-86	

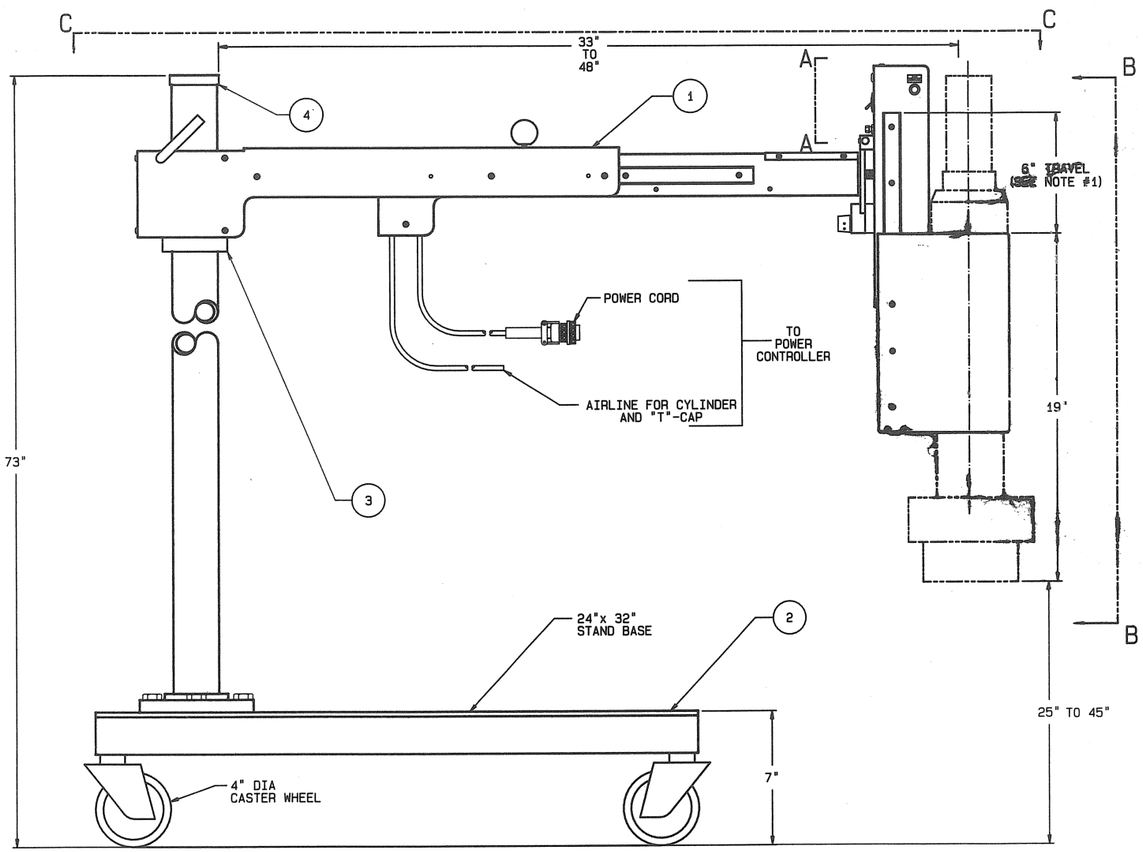

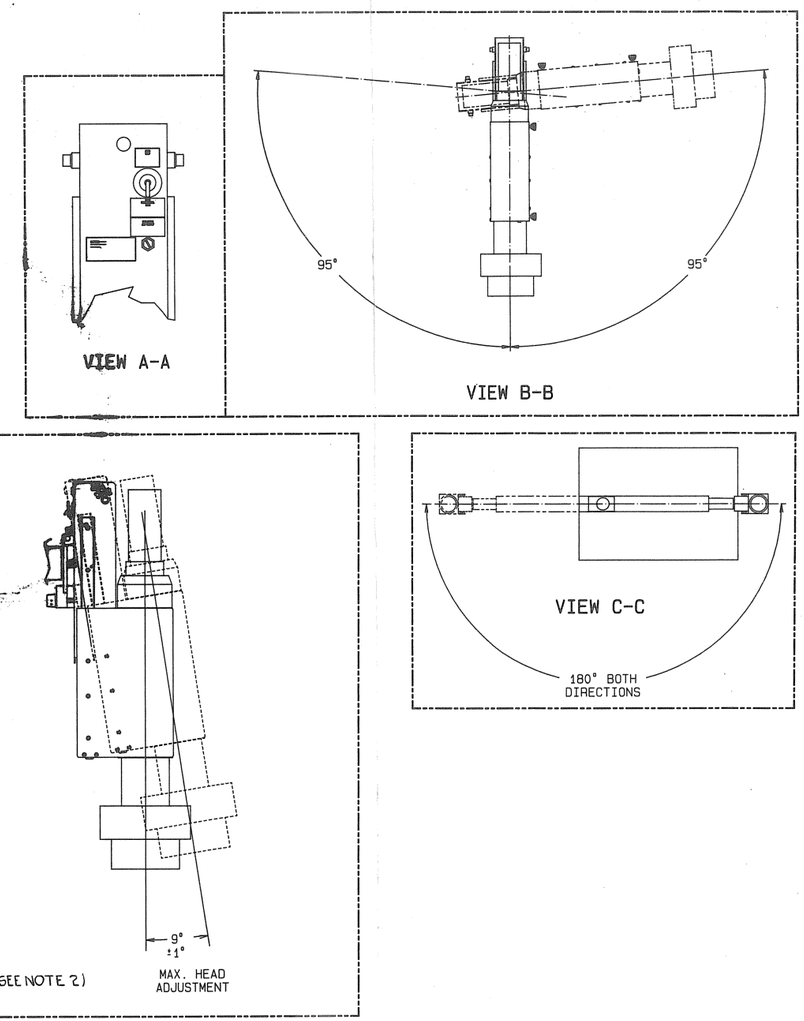

1- HEAD ASSY. IS SHOWN IN THE DOWN POSITION.

2- MODIFICATION KIT (CS4895) AVAILABLE TO UPGRADE OLDER EQUIPMENT.

REV.	ECN.NO	DATE
A	REL	1-10-85
B	2607	1-10-85
C	2636	3-7-85
D	2897	12-85
E	4275E	9-11-86

TEMP. STOCK NO.	NOMENCLATURE OR DESCRIPTION	MFG. PART NO.	ITEM
	PARTS LIST		

APPENDIX B-1	LMS1180	TP04-12A
		TP04-12A
NEXT ASSY	USED ON	SYSTEM
APPLICATION		

UNLESS OTHERWISE SPECIFIED DIMENSIONS ARE IN INCHES TOLERANCES ARE:
FRACTIONS ± 1/64 DECIMALS .XX ± .01 .XXX ± .005 ANGLES ± 30'

MATERIAL N/A

FINISH N/A

DO NOT SCALE DRAWING

CONTRACT NO.

APPROVALS		DATE
DRAWN	L. REYNOLDS	1-10-85
CHECKED	[illegible]	9-16-86
ENG		

UNLESS OTHERWISE SPECIFIED RESISTANCE VALUES ARE IN OHMS ± % WATT CAPACITANCE VALUES ARE IN ± % VOLTS

TEMPTRONIC CORP.

STAND TOP ASSEMBLY

SIZE	CODE IDENT NO.	DRAWING NO.	REV
D		4275	E

SCALE NONE SHEET 1 OF 1

FOTOBEAM/BROOKSIDE 0228-D

B-1.5 STAND OPERATION

A functional checkout of the stand should be performed after it has been assembled and connected as outlined in Section B-1.2. Refer to Section B-1.3, to become familiar with the stand features and controls. It is suggested that a piece of the silicone foam insulating material be placed on the bench or table surface for the ThermoCap to be lowered onto.

The stand's electrical and air requirements are supplied by the Power Controller, requiring the system to be powered. The system's input gas supply should be regulated as specified.

The HORIZONTAL ARM assembly contains the principal controls. Since the introduction of the stand, several design changes have been made improving performance and simplifing operation. Three of the changes concern the location and function of the pneumatic piston housing controls, see Figures B-1.3, B-1.4 and B-1.5 (current configuration). The most recent (7/86) revision was the addition of the WAND ALIGNMENT adjustment (Item 15 of Figure B-1.2) to ensure proper sealing at the test site. It is possible to add the WAND ALIGNMENT feature to an existing stand, see drawing D4895 at the end of this section.

When all requirements such as insulating the test site (see Appendix C-2) and functional checkouts are satisfied, the stand/system should be interfaced to the test site.

B-1.5.1 Original Stand Controls

The stand controls are mounted on the top of the sliding horizontal arm, see Figure B-1.3, just behind the primary (WAND) and pneumatic piston assembly. The LIFT/LOWER switch activates a valve to lift or lower the heater housing and ThermoCap assemblies. The first knurled knob behind the switch is used to control the down speed of the primary. The second knurled knob is used to adjust the down pressure exerted by the ThermoCap on the tester. In both cases, turning the knurled knob clockwise, will decrease or restrict the action of the pneumatic piston.

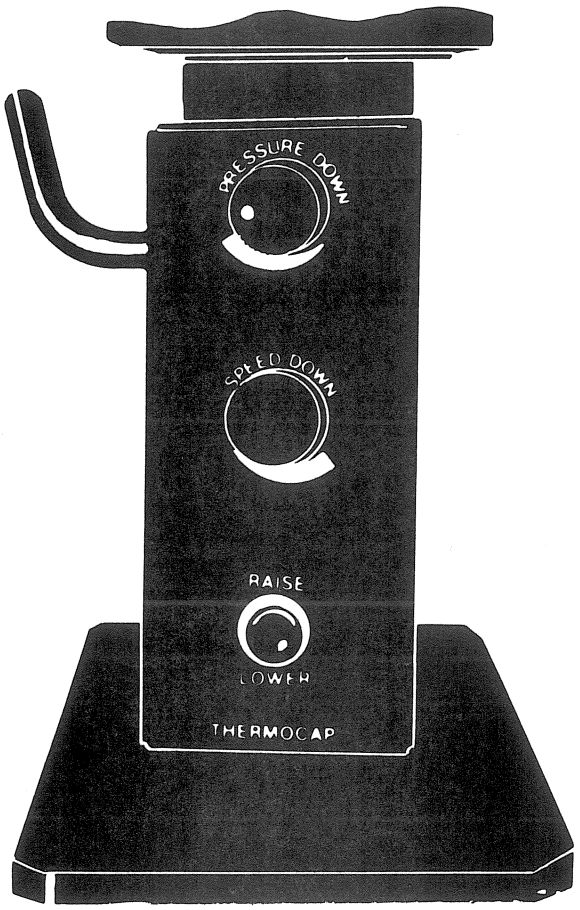

Figure B-1.3. Original Stand Controls.

Once the speed and pressure controls have been adjusted and the up/down action is acceptable, the thermal interfacing to the tester is complete and the system is now ready for temperature testing.

B-1.5.2 Interim Stand Controls

In this version, the controls were mounted on the piston housing, see Figure B-1.4. The function of each control remained the same, as previously stated in Section B-1.5.1. The purpose of this change was to allow convenient location of the LIFT/LOWER switch (one on either side of the pneumatic piston housing) and ENCLOSURE AIR SUPPLY PORT as well as enclose the gas piston.

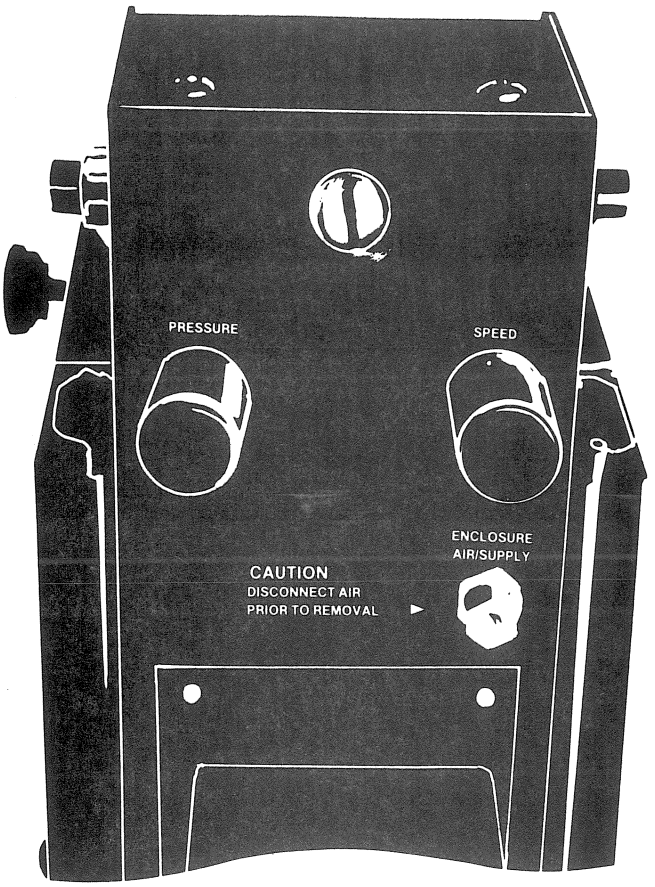

Figure B-1.4. Interim Stand Controls.

B-1.5.3 '85 Stand Controls

This version, see Figure B-1.5, removed the DOWN PRESSURE regulator and DOWN SPEED control, see footnotes on page B-1.5. A JOG switch was provided to interrupt the downward movement of the WAND to facilitate aligning the shroud.

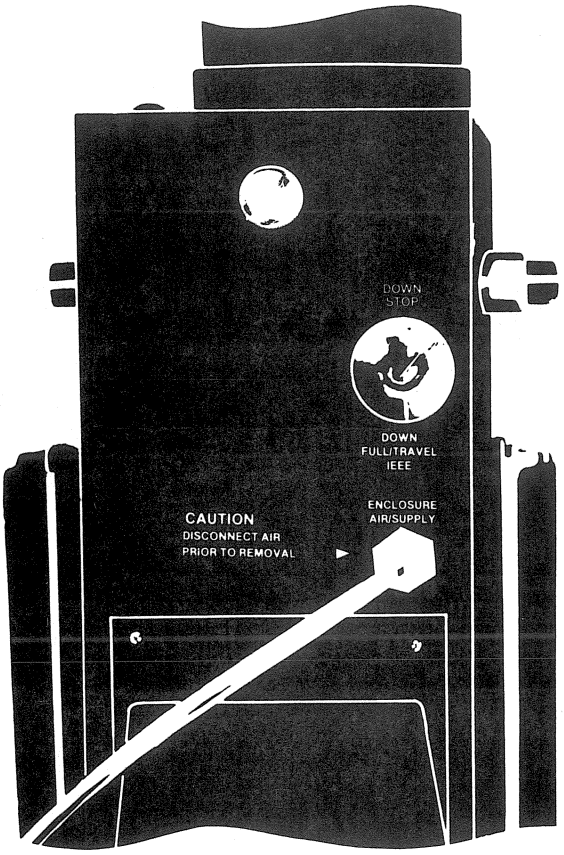

Figure B-1.5. '85 Stand Controls.

B-1.6 OPTIONS

An optional foot switch (P/N ZAK39780) is available to initiate the lifting or lowering of the WAND. The LIFT/LOWER switch(s) has been paralleled to a connector located underneath the HORIZONTAL ARM.

The up/down action of the pneumatic piston (WAND) may also be IEEE-488 controlled providing the microprocessor controller is equipped with that option and properly interfaced.

B-1.7 TROUBLSHOOTING

Drawing D4269 (sheet 3 of 3) is provided here to assist with troubleshooting this assembly.

REVISIONS				
ZONE	LTR	DESCRIPTION	DATE	APPROVED
	A	ECN 3058 RELEASED.	5/86	PB
	B	ECN 4797 B	8/86	

FIGURE 1

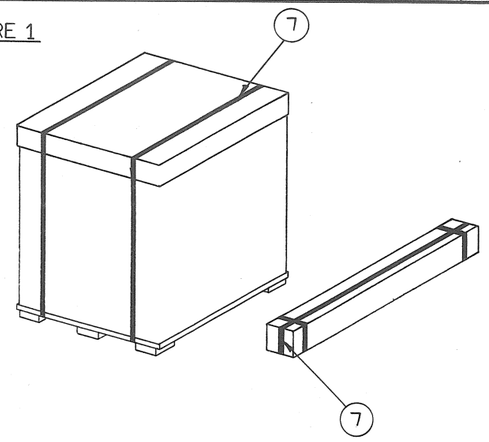

FIGURE 2

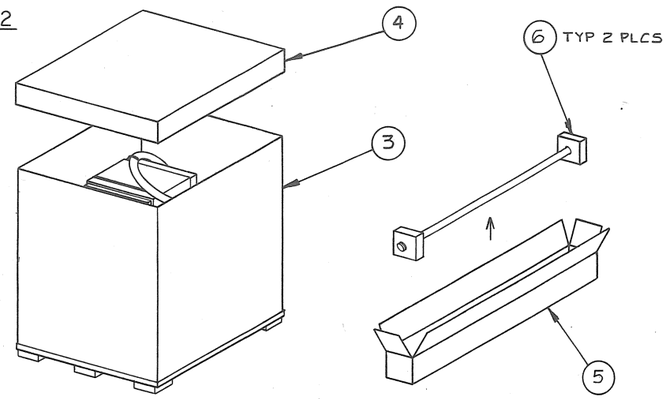

FIGURE 3

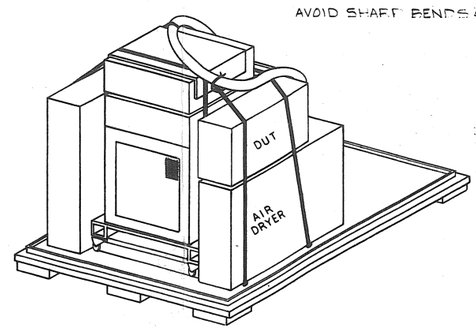

FIGURE 4

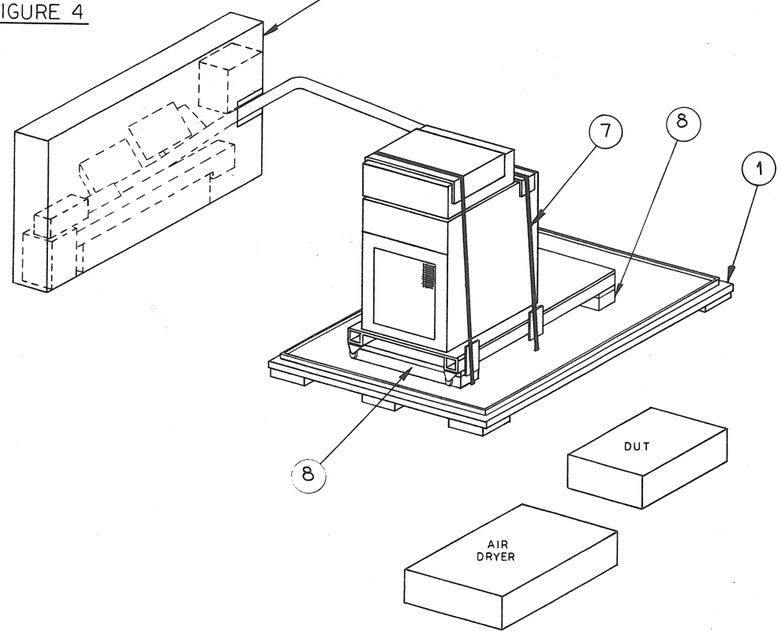

FIGURE 5

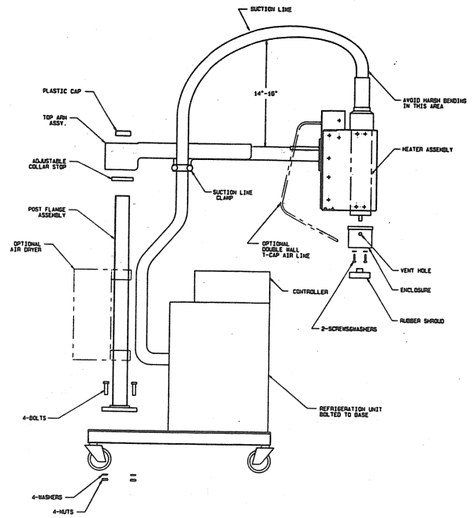

			UNLESS OTHERWISE SPECIFIED DIMENSIONS ARE IN INCHES TOLERANCES ARE: FRACTIONS ± 1/64 DECIMALS .XX ± .01 .XXX ± .005 ANGLES ± 30'
			MATERIAL
			FINISH
NEXT ASSY	USED ON	SYSTEM	
APPLICATION			DO NOT SCALE DRAWING

TEMP. STOCK NO.	NOMENCLATURE OR DESCRIPTION	MFG. PART NO.	ITEM
	PARTS LIST		

CONTRACT NO.

TEMPTRONIC CORP.

APPROVALS	DATE
DRAWN EDPINOLA	5-8-86
CHECKED PB	5-8-86
ENG	

412 SHIPPING CONTAINER ASSY

UNLESS OTHERWISE SPECIFIED RESISTANCE VALUES ARE IN OHMS ± % WATT
CAPACITANCE VALUES ARE IN ± % VOLTS

SIZE	CODE IDENT NO.	DRAWING NO.	REV
D		4797	B

SCALE | SHEET 1 OF 1

FOTOBEAM/BROOKSIDE 0228-D

REVISIONS				
ZONE	LTR	DESCRIPTION	DATE	APPROVED

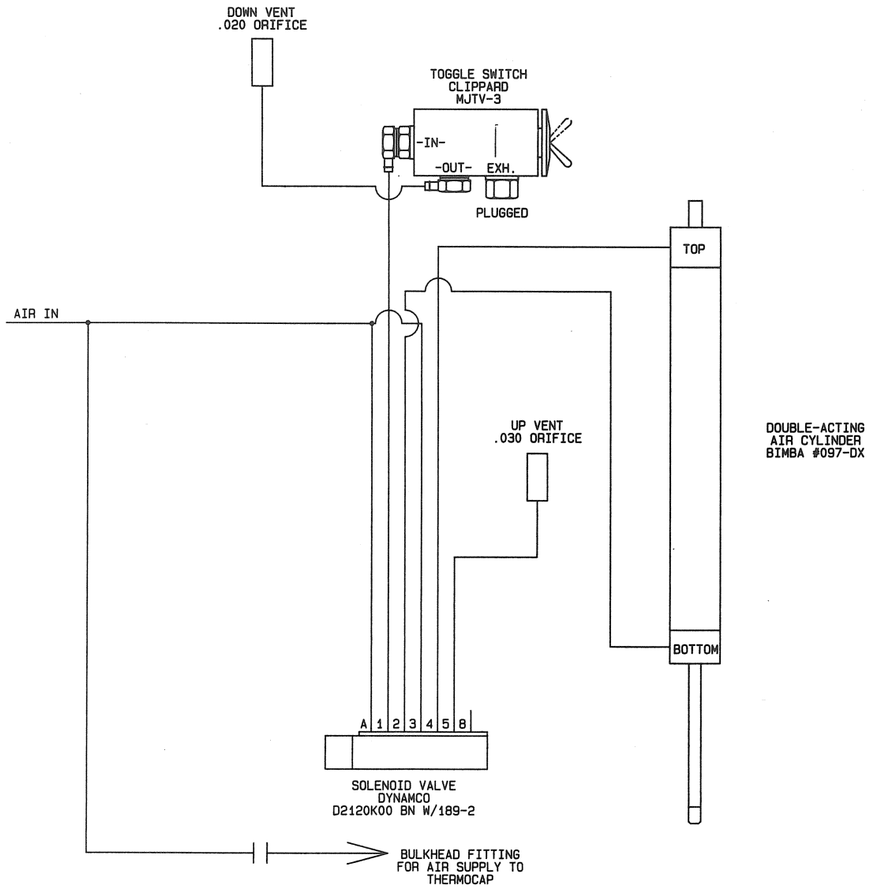

PNEUMATIC BLOCK
DIAGRAM

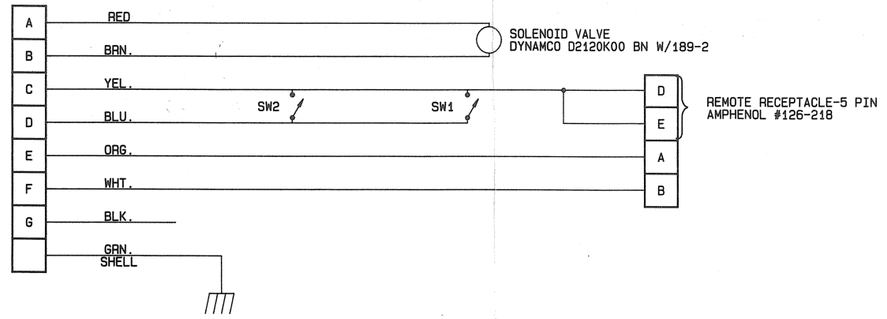

TEMP. STOCK NO.	NOMENCLATURE OR DESCRIPTION	MFG. PART NO.	ITEM
	PARTS LIST		

ZH54275		TP412A	
NEXT ASSY	USED ON	SYSTEM	
APPLICATION			

UNLESS OTHERWISE SPECIFIED DIMENSIONS ARE IN INCHES
TOLERANCES ARE:
FRACTIONS ± 1/64 DECIMALS .XX ± .01 .XXX ± .005 ANGLES ± 30'

MATERIAL: SEE P/L

FINISH: NONE

DO NOT SCALE DRAWING

CONTRACT NO.

TEMPTRONIC CORPORATION

APPROVALS	DATE
DRAWN J. STARK	5-20-86
CHECKED	
ENG	

HEAD SUB-ASSEMBLY

UNLESS OTHERWISE SPECIFIED
RESISTANCE VALUES ARE IN OHMS ± % WATT
CAPACITANCE VALUES ARE IN ± % VOLTS

SIZE	CODE IDENT NO.	DRAWING NO.	REV
D		4269	J

SCALE 1/2 SHEET 3 OF 3

FOTOBEAM/BROOKSIDE

APPENDIX B-2
AIR/GAS DRYER ASSEMBLY

B-2.1 DRYER ASSEMBLY

The optional air/gas dryer, shown in Figure B-2.1, as supplied, is a complete assembly requiring only gas and power connections. The gas source input pressure should be within the allowed limits of 80 to 120 psig (5.6 to 8.4 kg/cm^2) when the system is operating. The power cord is designed to be connected to the power controller, eliminating the need for a separate power outlet. Provision has been made for mounting the dryer to the floor stand-column using the 2 (blue) clamps and hardware provided or any vertical surface. A 10-foot hose is supplied, but a longer connection may be used if necessary, to connect the dryer to the gas/air source.

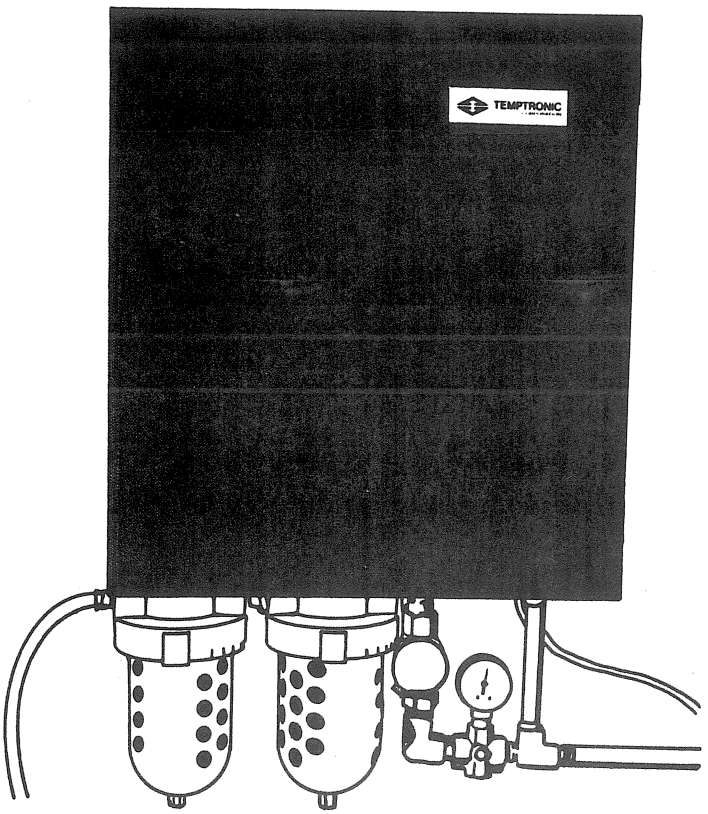

Figure B-2.1. Air/Gas Dryer Assembly.

B-2.2 DRYER FEATURES

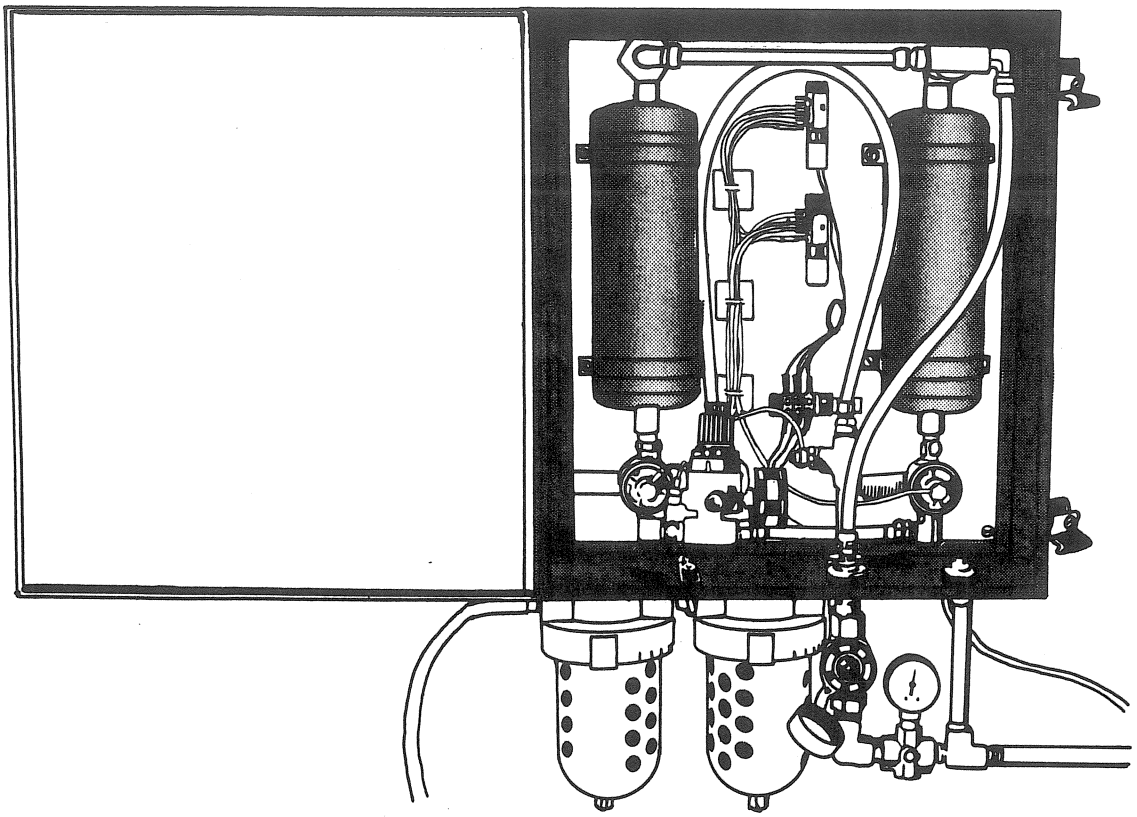

Figure B-2.2. Internal view of dryer assembly.

Item	Designation	Function	Explanation
1	POWER CORD	Brings power to the dryer.	Power to operate the dryer is obtained by plugging this cord into the proper receptacle at the rear of the power controller.
2	FUSE	Protects the dryer and operator.	The fuse value has been carefully selected to interrupt power to this assembly in the event of an excessive current draw.

Item	Designation	Function	Explanation
3	GAS INLET port	Allows gas supply connection.	This barbed hose fitting is for 3/8 inch ID air hose. Inlet pressure must be between 80 to 120 psig. or 5.6 to 8.4 kg/cm^2.
4	GAS OUTLET port	Allows gas to exit from the dryer.	This port offers a means for connecting the system to the dryer so the conditioned gas can be supplied to the primary heat exchanger. This connects to the GAS INPUT port on the POWER CONTROLLER back panel.
5	MOISTURE indicator	Indicates if outlet air is dry.	A color change in this component indicates that the dryer is malfunctioning allowing poorly conditioned gas to enter the system.
6	PRESSURE regulator	Permits setting of outlet gas pressure to the system.	Manually adjustable valve on the outlet port of the dryer. Pressure should not exceed 50 psig.
7	PRESSURE gauge	Indicates outlet gas pressure in psig..	Allows the user to adjust the PRESSURE regulator to the required pressure without any external equipment.

B-2.3 AIR DRYER MANUAL

A copy of the air dryer manual is included in this section for your assistance.

B-2.3.1 GENERAL

The TAD-1000 assembly removes solids, liquids and water vapor from compressed air. The unit is fully automatic and is controlled by a 12 volt dc signal from an external microprocessor.

B-2.3.2 SPECIFICATIONS

Inlet Pressure	Minimum 80 psig. Recommended 100 psig Maximum 125 psig.
Inlet Temperature	Maximum 50°C (125°F)
Filtration Level	0.3 micron
Dew Point	-57°C (-70°F)
Outlet Flow	Maximum 10 SCFM
Purge Flow	2.6 SCFM
Air Connections	Barb Fitting for 3/8" hose

Mounting - mounts vertical and upright and attaches to 2" pipe with clamps provided.

Dimensions - Maximum Envelope 60 cm X 35.6 cm X 16.7 cm (24" X 14" X 6½")

Electric Control - 12 volt dc to SV-1 for Timing Control
12 volt dc for System On-Off Control

Electric Connections - Screw terminals inside enclosure are pre-wired to multipin connector.

B-2.3.4 MOUNTING

Mount dryer vertical and upright with filters at bottom. There are four tapped holes at the rear of the enclosure. Using the plastic clamps, bolts and lockwashers provided, secure the dryer to the vertical 2" pipe.

B-2.3.5 ELECTRICAL CONNECTIONS

Attach cable assembly to connector marked "DRYER" on power control unit.

B-2.3.6 HOSE CONNECTIONS

Two barb fittings are provided for the inlet and outlet connections. Attach fittings to dryer and connect 3/8" hose. There are 1/8" NPT connections on the bottom of filters F-1 and F-2. These filters automatically dump collected liquids. Connect drain line to suit.

B-2.3.7 ADJUSTMENTS

Pressure regulator R-1, located inside the enclosure, should be set at 30 psig. This is the gas supply for the pilot section of the solenoid valve. Pressure Regulator R-2, located outside the enclosure, can be set for the required system operating pressure.

B-2.3.8 OPERATION

THE TAD-1000 employs a prefilter (F-1) and a coalescing filter (F-2) to remove solid and liquid particles from the compressed gas. The gas then passes through a dessicant dryer where water vapor is removed. This dryer is heatless and self regenerative. Operation of the dryer is evident from the audible sound of the valves. Every 30 seconds the valves change position.

The external timer signal from the microprocessor automatically programs the gas flow through the desiccant tanks. During a 30 second interval, the gas flows through the left desiccant tank. During the next 30 second interval the gas flows through the right desiccant tank. A portion of the very dry gas (purge gas) is used to regenerate the offstream desiccant tank. The purge gas exhausts through the mufflers on the two power valves PV-1, PV-2. This purge air flow rate is 2.6 SCFM at 80 psig. Additionally, there is a surge flow through the muffler every 30 seconds as the valves shift position.

B-2.3.9 MAINTENANCE

Filter cartridges should be replaced periodically. A general "rule of thumb" recommends replacement every six months. Actual quality of input gas may necessitate more frequent replacement. The automatic drains in the two filters should be checked periodically and cleaned as required. Sludge build-up can prevent the drains from operating properly.

In the event of a malfunction refer to drawing B4358 on page B-2.8.

B-2.3.10 PARTS LIST

ITEM	Schematic DESIGNATION	Manufacturer PART NUMBER	DESCRIPTION	QTY	Temptronic P/N
1.	F-1	F20-02-F00	Prefilter	1	
		FRP 95-236	Replacement Cartridge	1	CS 00530
		GRP 95-714	Replacement Drain	1	CS 00540
2.	F-2	M20-02-F00	Coalescing Filter	1	
		MTP 95-549	Replacement Cartridge	1	CS 00550
		GRP 95-714	Replacement Drain	1	
3.	R-1,2	R00-02-000	Pressure Regulator	2	MM 03350
4.	G-1	GRP 95-227	Pressure Gauge (0-160 psig.)	1	
5.	G-2	Fig. 23K 1½" 0-160	Pressure gauge (0-160 psig.)	1	
6.	SV-1,2	D2120K00	Solenoid valve (12 volt dc)	2	VA 00180
7.	MI-1	AMI-1FM3	Moisture Indicator	1	MM 03340
8.	PV-1,2	250A-3-10-20	Main Power Valve	2	KK 00900
9.	DT-1,2	40197FF	Dessicant Tank	2	ZZ 03520
10.	AD-1,2	40410	Gas Director Kit	1	ZZ 03510
11.	M-1,2	11303	Muffler	1	ZZ 02340
12.	-	OKC-270R1	Cable Assembly	1	ZZ 03500

B-2.3.11 ACCESSORIES PACKAGED LOOSE

	PART NUMBER	DESCRIPTION	QTY
3/8"-16 X 3½"		Socket Head Bolt	4
3/8"		Lockwasher	4
6603 SPP		Clamp Half	4
124-HPL-6-4		Barb Fitting	2

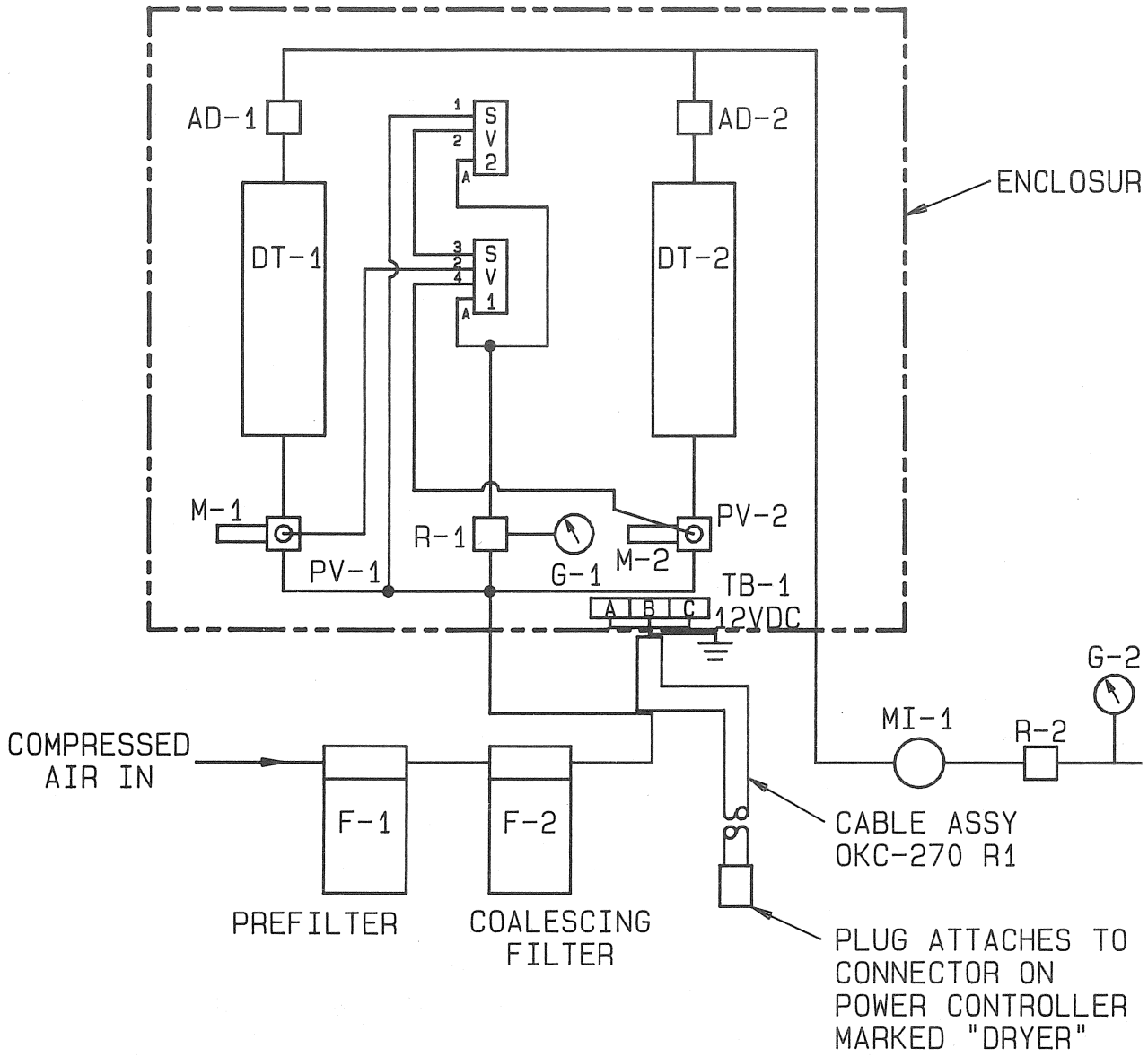

APPENDIX B-2	LMS1190	TP04/ MANU
NEXT ASSY	USED ON	SYSTE
APPLICATION		

B-2.4 AIR FILTER ASSEMBLY

This assembly, see drawing B4051 (next page), is offered as an option to those users who already have a dry (-70°C dew point) gas source but may require additional filtering to remove contaminates which may effect the operation of the ThermoStream^{R} System.

For this assembly to be effective, it should be located in the air line just before the ThermoStream^{R} System. The input and output barbed fittings will accept 3/8" ID reinforced hose. These hose connections should be properly clamped. Two filters are used, the first is for moisture and the second is for oil. Both have automatic relief valves which should be connected to a suitable drain/reservoir. The pressure regulator/gauge assembly is on the output side. The outlet pressure should be adjusted to that specified in the manual for the system.

REVISIONS				
ZONE	LTR	DESCRIPTION	DATE	APPROVED
	B	INITIAL RELEASE ECN# 3062	6/86	PB
	C	REVISED PER ECO# 3114	6-11-86	PB

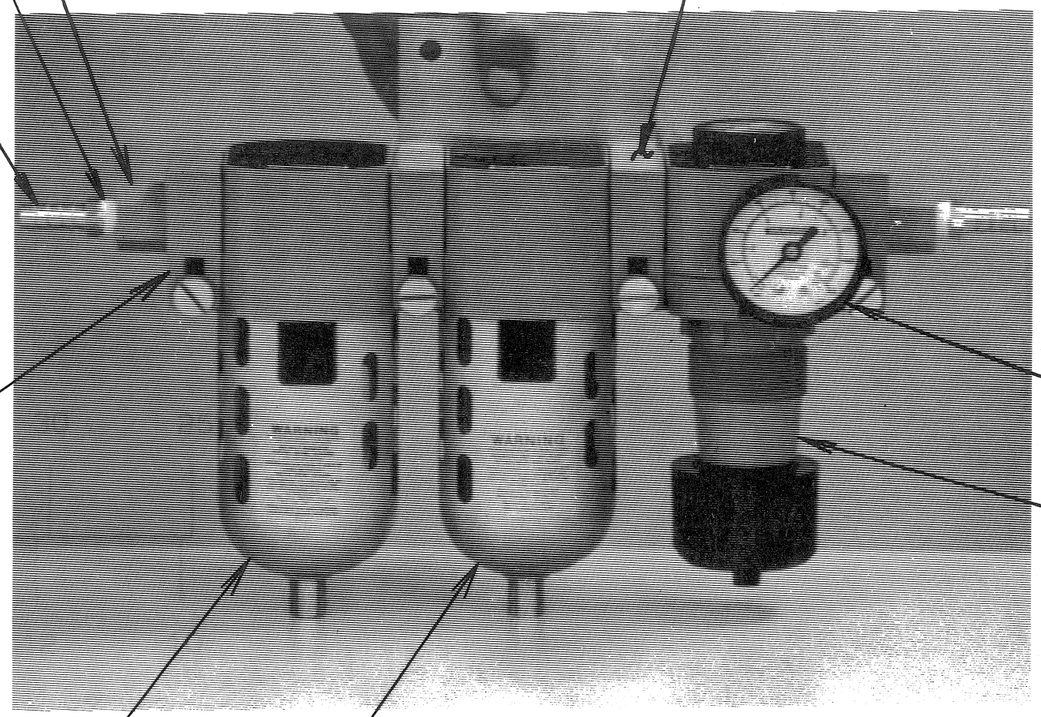

MFG. PART NO.	DESCRIPTION	QTY.	ITEM
GPA-95-969	SLEEVE WITH MOUNTING BRACKET	2	9
GPA-95-224	END BLOCK	2	8
	TEFLON THREAD SEALANT (3 PLACES)	A/R	7
* 1F6	HOSE FITTING 3/8 BARB	2	6
GPA-95-292	SLEEVE	2	5
F26/03/F00	FILTER W/ DRAIN	1	4
M26/03/000	COALESCING FILTER	1	3
R26/03/000	REGULATOR	1	2
GRP/95/229	PRESSURE GAUGE	1	1

* NOTE 1: TO SUPPLIER ONLY. PLACE ITEM 6 QTY 2 IN BOX W/ASSEMBLY

NOTE 2: MUST HAVE CERTIFICATE OF COMPLIANCE - QTY. 1 PER SHIPMENT

TP0412 LISTING		TP0412
NEXT ASSY	USED ON	SYSTEM
APPLICATION		

UNLESS OTHERWISE SPECIFIED DIMENSIONS ARE IN INCHES
TOLERANCES ARE:
FRACTIONS DECIMALS ANGLES
± 1/64 .XX ± .015 ± 30'
.XXX ± .005

MATERIAL

FINISH

DO NOT SCALE DRAWING

CONTRACT NO.

APPROVALS	DATE
DRAWN BD	10/85
CHECKED PB	11/85
ENG	

UNLESS OTHERWISE SPECIFIED
RESISTANCE VALUES ARE IN OHMS ± % WATT
CAPACITANCE VALUES ARE IN ± % VOLTS

TEMPTRONIC CORP.

AIR LINE
PRE-FILTER ASSEMBLY ZAD40510
(CONTROL DRAWING)

SIZE	CODE IDENT NO.	DRAWING NO.	REV
B		4051	C
SCALE		SHEET 1 OF 1	

FOTOBEAM/BROOKSIDE

B-2.10

RUN @ 60 FPM
7 BULBS

APPENDIX B-3
TP0412A THERMOSTREAM® THERMAL CAP & ENCLOSURE OPTIONS

B-3.1 INTRODUCTION

The Thermal Cap or its equivalent is an integral functional assembly which interfaces the ThermoStream® System to the tester and should always be in place when the TP0412A ThermoStream® System is being utilized. Currently, three Thermal Cap assemblies are available for the TP0412A ThermoStream® System, see page B-3.2.

B-3.2 THERMAL CAPS

The single wall Thermal Cap is constructed from polycarbon, with a 3.75" ID., to withstand the temperatures which the system is capable of providing. This assembly, in conjunction with the supplied enclosures or shrouds, create a cavity around the test site and DUT. Together they restrict the temperature controlled gas stream from escaping from the test area before sufficient heat transfer has occurred. This Thermal Cap allows normal cycling of the system from one temperature extreme to the other and stabilization at the desired test temperature for short time periods.

Two other Thermal Caps that have double wall construction are available. They allow a portion of ambient dry gas supplied to the ThermoStream System to circulate between them as well as over the outer surface of the outer ring. The temperature controlled gas is exhausted out the side of the upper portion of the Thermal Cap through an insulated, flexible hose. The unique design will allow stabilization or soaking at the desired test temperatures for much longer time periods, especially below ambient, because the formation of condensation or frost is eliminated.

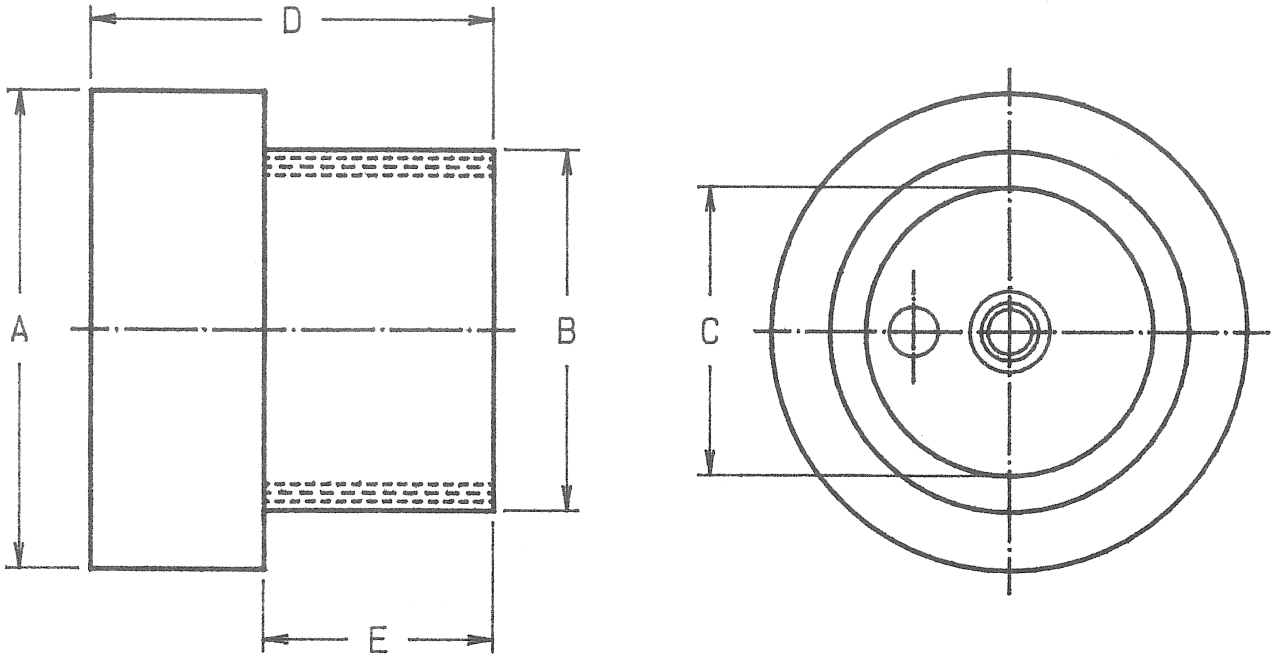

(SHOWN AS DBL. WALL)

STYLE	* THERMOCAP KIT P/N	THERMOCAP ASSY. P/N	DIMENSIONS				
			A	B	C	D	E
SINGLE WALL	ZAK42550	SA40430	4.25"♦	4.00"♦	3.75"♦	3.70"	3.25"
DBL. WALL	ZAK42540	SA40500	4.50"♦	3.66"♦	2.42"♦	4.50"	2.12"
DBL. WALL	ZAK42480	SA40490	6.62"♦	5.08"♦	4.04"♦	4.50"	2.12"

* INCLUDES NON-CONDUCTIVE SHROUD KITS. CONDUCTIVE MAY BE SUBSTITUTED BY REQUEST.

♦-IS DIAMETER SYMBOL.

B-3.3 FLEXIBLE EXTENDER

The Flexible Extender, see Figure B-3.1, is an optional accessory designed to allow interfacing of the TP0412A ThermoStream system to difficult-to-reach components and customed test fixtures. It can also be used to supply and direct temperature controlled air into restricted areas in other equipment.

This accessory easily slips onto the end of the WAND and interfaces with each of the Thermal Caps and accessory Printed Circuit Board Enclosures. It is 18" in length, approximately 2" in diameter and will accommodate the system entire temperature range.

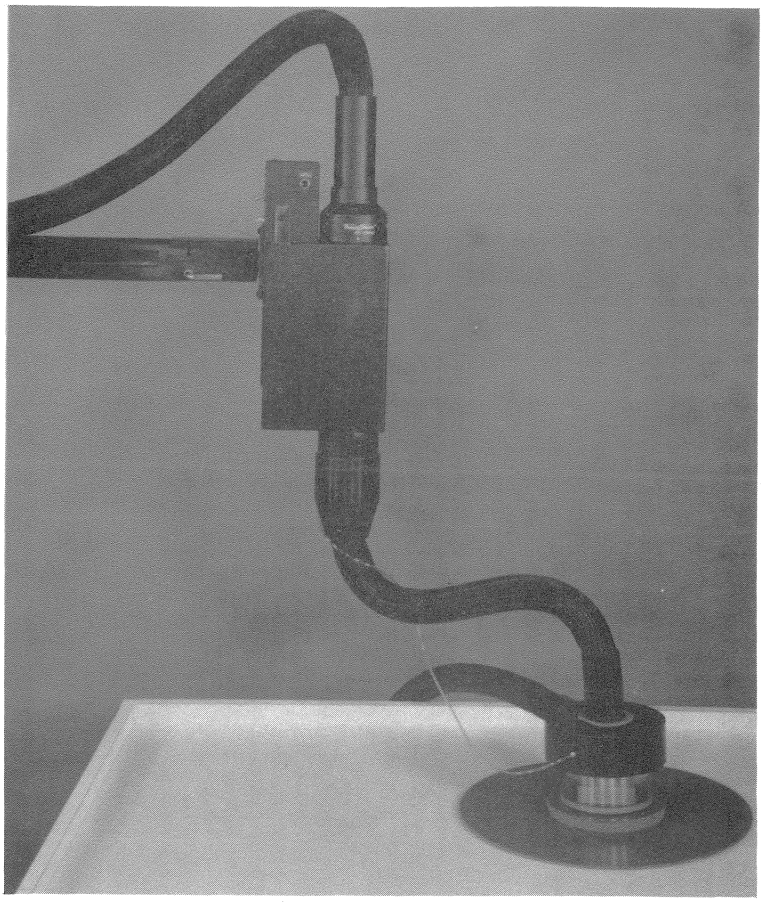

B-3.1. Flexible Extender Shown with Large Double Wall Thermal Cap.

B-3.4 PRINTED CIRCUIT BOARD ENCLOSURES

There are Two printed circuit board (PCB) enclosures (MiniZone and MiniDome) are offered as optional accessories to the TP0412A ThermoStream system. These enclosures are specially constructed chambers (see Appendix C-6) for the testing of small PCBs or circuit arrays at temperatures between -70°C and +150°C on room temperature testers.

****
* CAUTION *
****

A PCB ENCLOSURE OPTION WITH A WINDOW SHOULD NEVER BE OPERATED AT TEMPERATURES ABOVE +150°C. TEMPERATURES ABOVE +150°C CAUSE THE WINDOW FILMS TO STRETCH.

B-3.4.1 MiniZone Enclosure

The MiniZone enclosure is designed for edge card applications. As supplied, it is a complete assembly which easily attaches to the PRIMARY HEAT EXCHANGER (see drawing D4764-CFG) in place of the Thermal Cap directly or with the Flexible Extender.

B-3.4.2 MiniDome Enclosure

The MiniDome enclosure is designed for Bed-Of-Nails applications. As supplied, it is a complete assembly which easily attaches to the PRIMARY HEAT EXCHANGER (see drawing D ZSA48280-CFG) in place of the Thermal Cap with the Flexible Extender.

Both the top and bottom covers are easily removed. The bottom cover can be cut to permit the insertion of the test socket or connector. The top cover is supplied with a specially designed patented window which permits single point electrical probing of test points on the PCB under test, without removing the PCB from the test temperature environment.

APPLICATION			REVISION			
NEXT ASSY	USED ON	SYS	LTR	DESCRIPTION	DATE	APPROVED
			A	INITIAL RELEASE	4-8-86	PB

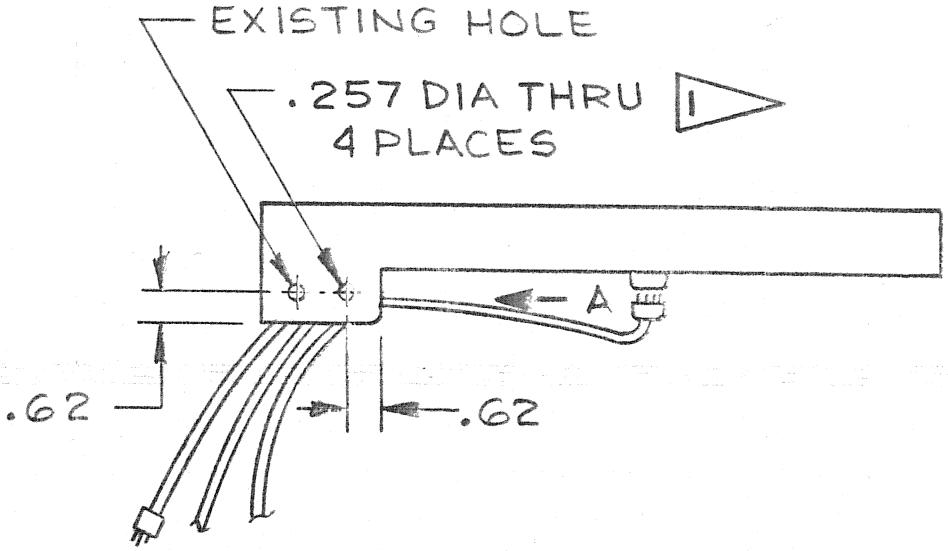

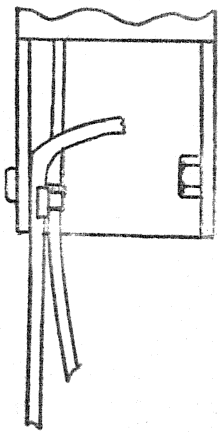

VIEW A

NOTES;

1. EARLY MODELS CUSTOMER WILL BE REQUIRED TO DRILL A .257 DIA THRU HOLE ON CONVENIENT SIDE.

UNLESS OTHERWISE SPECIFIED DIMENSIONS ARE IN INCHES TOLERANCES ARE: FRACTIONS ±1/64 DECIMALS .XX ± .015 ANGLES ± 30' .XXX ± .005	CONTRACT NO.	TEMPTRONIC CORP.	
MATERIAL —	APPROVALS / DRAWN ESPINOLA	DATE 3/26/86	FOOT SWITCH CABLE ROUTING
FINISH —	CHECKED — / ENG		SIZE A · CODE IDENT NO. JAN 25 1988 · DRAWING NO. LMS 4757 · REV A
DO NOT SCALE DRAWING	UNLESS OTHERWISE SPECIFIED RESISTANCE VALUES ARE IN OHMS ± % WATT CAPACITANCE VALUES ARE IN ± % VOLTS	SCALE —	SHEET 1 OF 1

NOTES:

1. MAKE SURE HEATER HOUSING IS SECURE IN STAND HEAD. SYSTEM IS UNPLUGGED AND AIR DISCONNECTED.
2. TILT STAND HEAD LEFT OR RIGHT 90° AND SECURE IN THIS POSITION
3. POSITION ENCLOSURE ADAPTER ON END OF HEATER HOUSING *TAKE CARE THAT GROUND WIRE MOVES UP INTO HEATER HOUSING AND DOES NOT GET PINCHED, RECOMMEND ENCLOSURE BE POSITIONED SO THAT VENT HOLE OR VENT LINE IS TO EITHER SIDE OR TO REAR AWAY FROM OPERATOR.
4. ALIGN 2-THRU HOLES IN ENCLOSURE ADAPTER WITH 2-HEATER HOUSING HOLES SELECTED.
5. INSERT #6-32 SCREWS THRU ENCLOSURE AND INTO MOUNTING HOLES IN HEATER HOUSING AND TIGHTEN.
6. ASSEMBLE ENCLOSURE TO ENCLOSURE ADAPTER USING 6 SCREWS & WASHERS SUPPLIED.
   a. REMOVE SEAL PLUG FROM STAND FITTING.
   b. INSTALL 1/16 BARB FITTING SUPPLIED, INTO STAND FITTING.
   c. ATTACH AIR LINE SUPPLIED, BETWEEN STAND FITTING AND ENCLOSURE FITTING.
   d. INSERT EXHAUST TUBE ASSY. INTO ENCLOSURE ADAPTER AS SHOWN, MAKE SURE VENT LINE IS ALL THE WAY IN AND FULLY SEATED.

   * AIR LEAKAGE CAN OCCUR IF GOOD SEAL NOT MADE.
7. BOTTOM COVER MAY BE MODIFIED BY CUSTOMER TO MOUNT A PRINTED CIRCUIT BOARD CONNECTER, SUPPORT AND WIRING.
8. FOR ADDITIONAL INFORMATION, REFER TO SECTION B-3 (LMS 1200) OF SYSTEM MANUAL.
9. REFER TO DETAIL "A" FOR WINDOW SET CONFIGURATION.

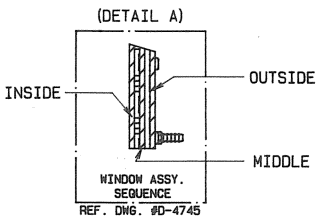

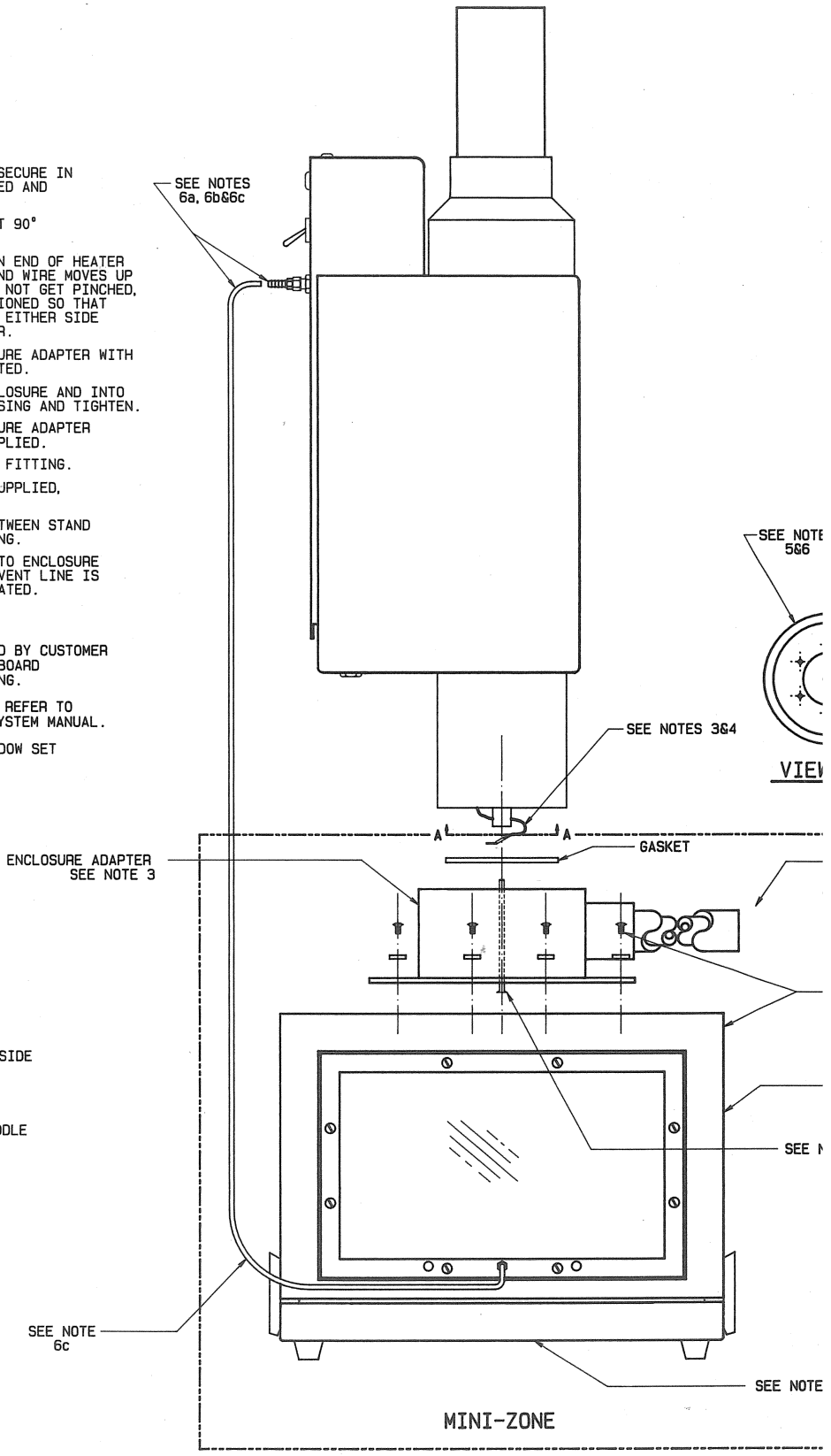

"CAUTION" MAKE SURE AIR IS OFF BEFORE STARTING MINI-DOME ATTACHMENT

NOTES;

1. REMOVE ANY EXISTING ACCESSORY FROM HEATER ASSEMBLY.
2. SLIP SILICONE COLLAR OF FLEXIBLE EXTENDER OVER END OF HEATER ASSEMBLY. MAKE SURE HEATER IS FULLY INSERTED INTO COLLAR AND SEATED FULLY.
3. REMOVE PLUG FROM AIR FITTING LOCATED AT REAR OF STAND HEAD.
4. INSTALL FITTING SUPPLIED WITH ACCESSORIES TUBE.
5. CONNECT WINDOW AIR LINE FROM STAND FITTING TO WINDOW FITTING. AIR LINE SUPPLIED WITH ACCESSORIES TUBE.

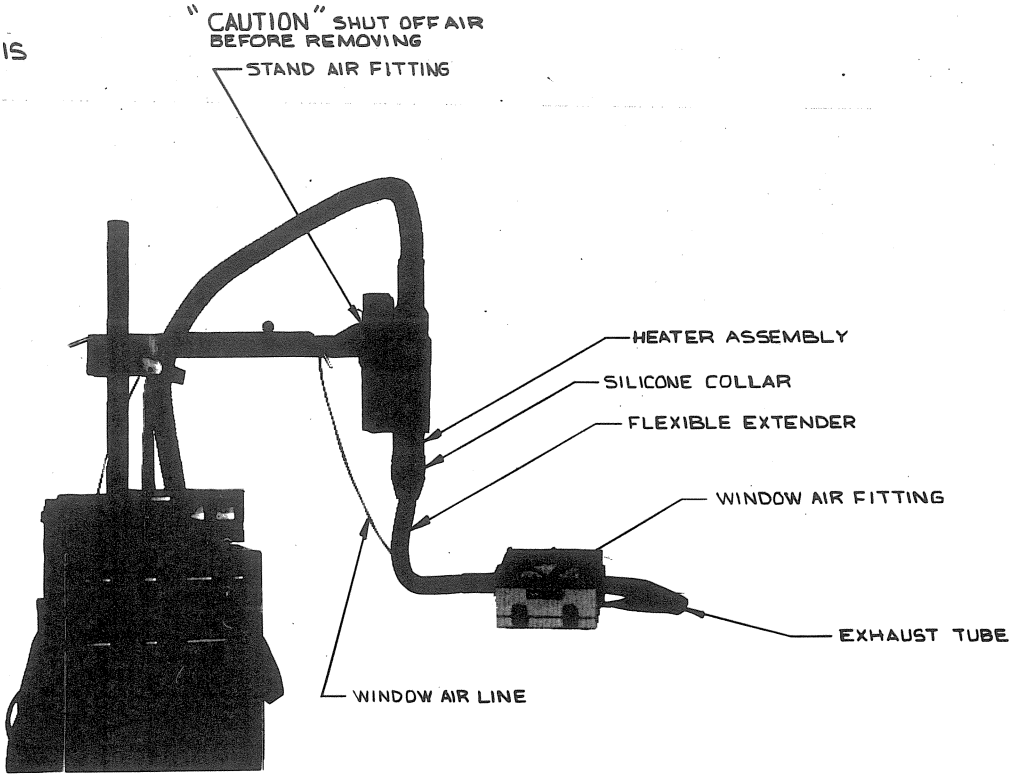

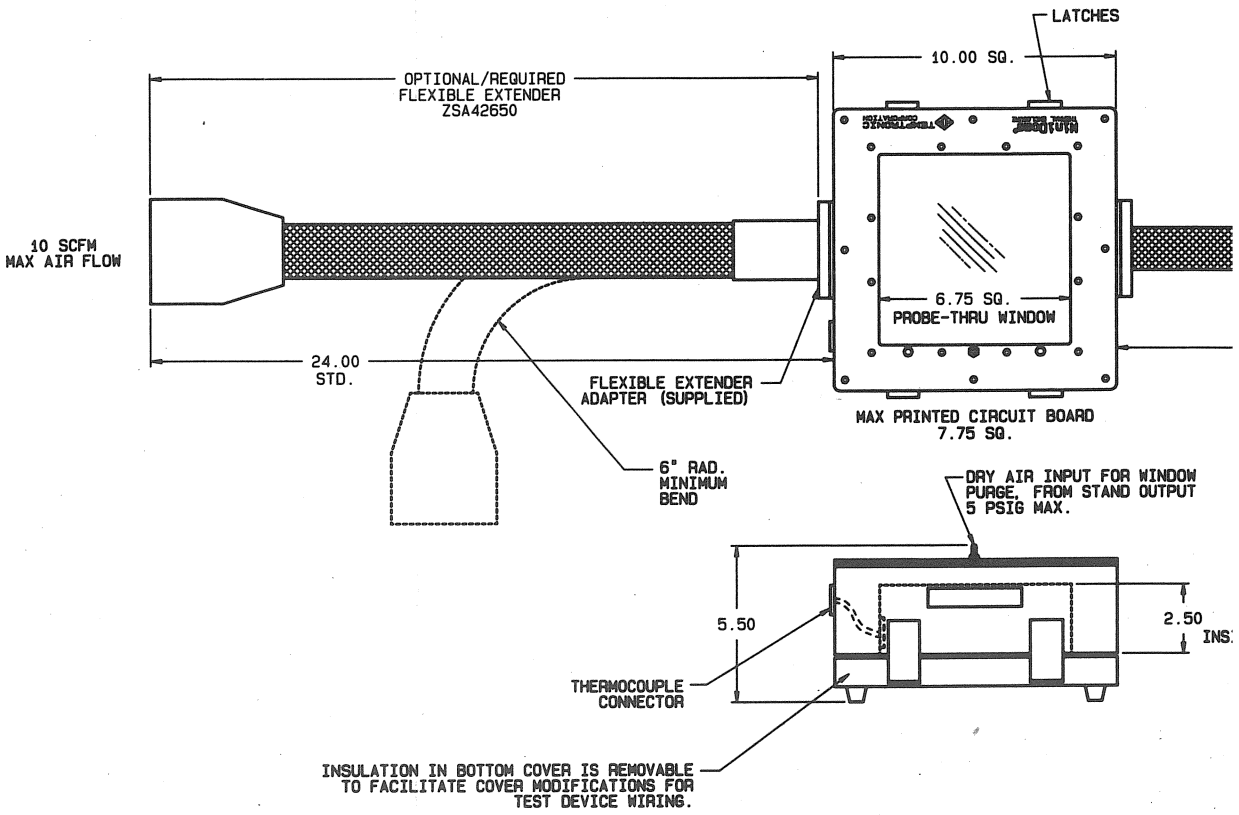

B-3.4.3 PCB ENCLOSURE FEATURES

Item	Designation	Function	Explanation
1	PROBE THROUGH WINDOW(S)	Permits viewing of and single point electrical probing of test points on the PCB under test.	A patented, multiple-film window with dry air circulated between the films to minimize or eliminate condensation on the films. Probing of the PCB is accomplished by piercing the films with the probe.
2	AIR SUPPLY HOSE	Supplies approx. 1SCFM of -60°C dew point gas to each window.	¼" OD clear polyurethane hose(s) which connect between the barbed fitting(s) on the window(s) and the STAND barbed fitting.
3	EXHAUST HOSE	Directs the exhaust gas of the PCB ENCLOSURE away from PERSONNEL and the TESTER.	Extremely hot or cold exhaust from the PCB ENCLOSURE COULD HARM either the TESTER or the TESTER OPERATOR. This removable hose is designed for temperatures between -70°C and +150°C.

B-3.4.4 WINDOW FILM REPLACEMENT

The window assembly has been designed to permit replacement of the film in the event the assembly becomes ineffective due to the number of punctures made or it has been exposed to excessive heat.

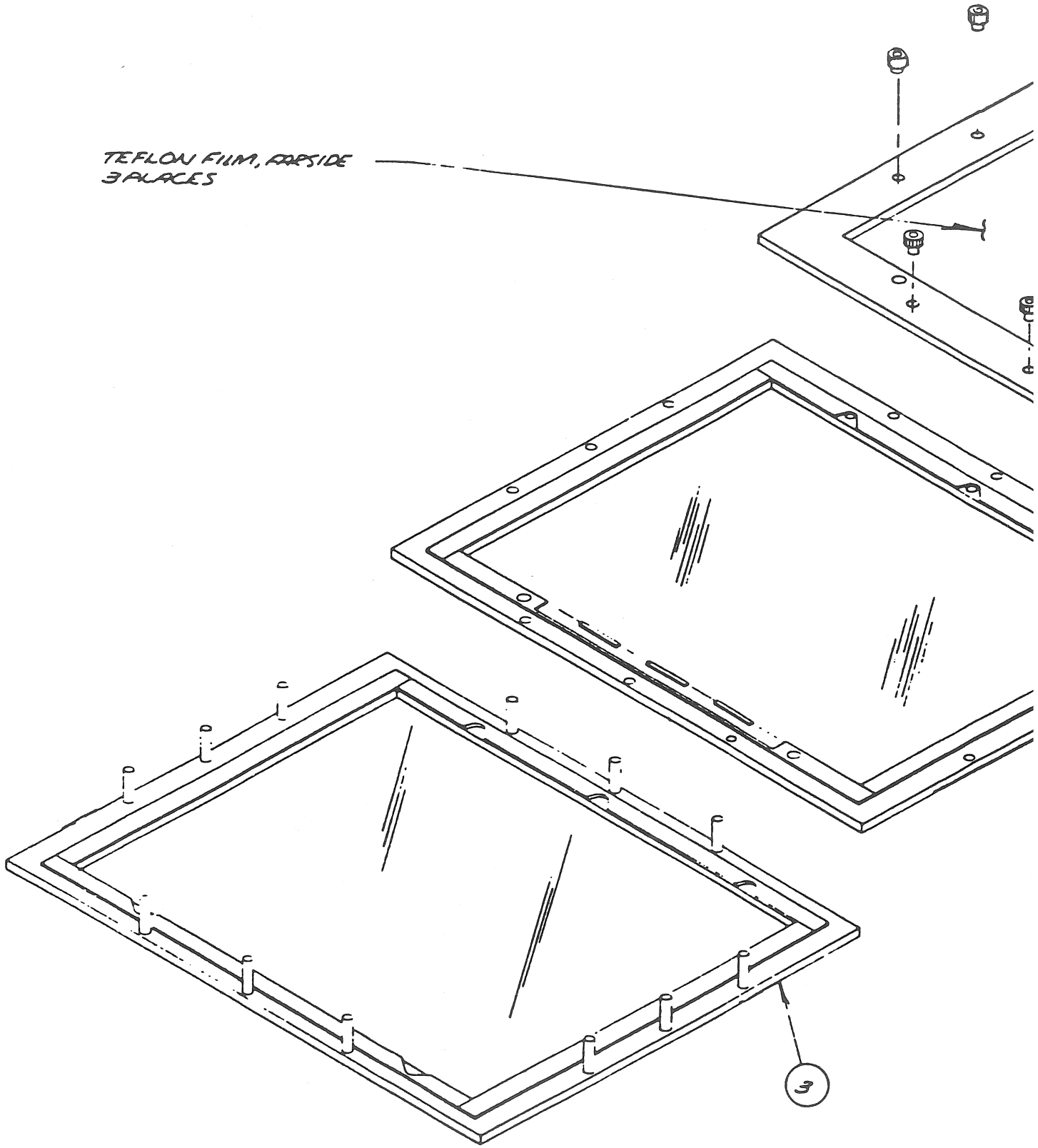
TEFLON FILM, ADHESIVE
3 PLACES
3

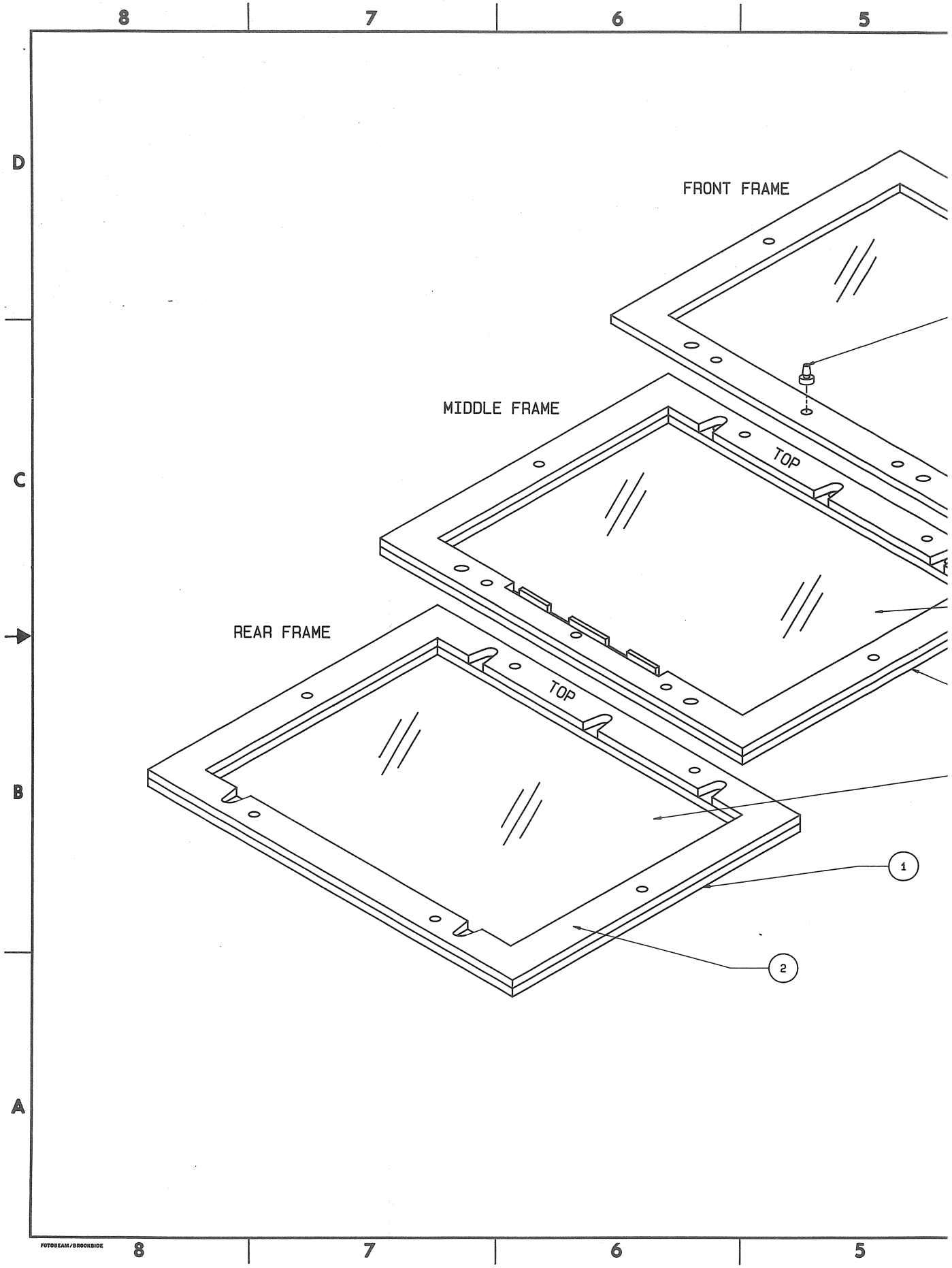
8
7
6
5
D
C
B
A
FRONT FRAME
MIDDLE FRAME
TOP
REAR FRAME
TOP
1
2
FOTOBEAM/BROOKSIDE

B-3.5 MiniHandler Thermal Accessory

The MiniHandler thermal accessory (see Figure B-3.2) is a multi-temperature, gravity-fed, manual handler for pre-soaking and testing packages. The temperature range covers the full MILspec thermal requirements from -55°C to +150°C when interfaced to Temptronic Corporation's ThermoStream^{R} System model TP0412A.

This accessory easily mounts to a tilt-head tester where the socket or contactor is set into the bottom of the track. It is also an effective stand-alone handler for ambient testing.

The MiniHandler receives temperature controlled air from the ThermoStream System (see Figure B-3.3) through a flexible air transfer tube (an insulated hose which slips onto the end of the WAND in place of the Thermal Cap). Test devices are pre-soaked as they approach the contactor area. The air temperature surrounding the DUT is monitored by means of a thermocouple located in the contactor area using the DUT option (see Appendix B-10).

Several MinHandler configurations are currently available to accommodate DIPs, PLCC (quad & flat pack), LCCCs and PGAs. Each Track is specifically designed to accommodate the specific device. Limited interchangeability is permitted however, it is restricted to like devices. The contactor is removeable for servicing and replacement as required.

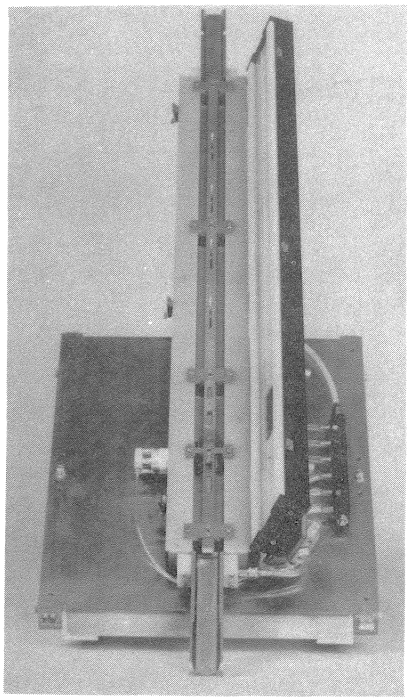

Figure B-3.2. Typical MiniHandler Thermal Accessory Configuration.

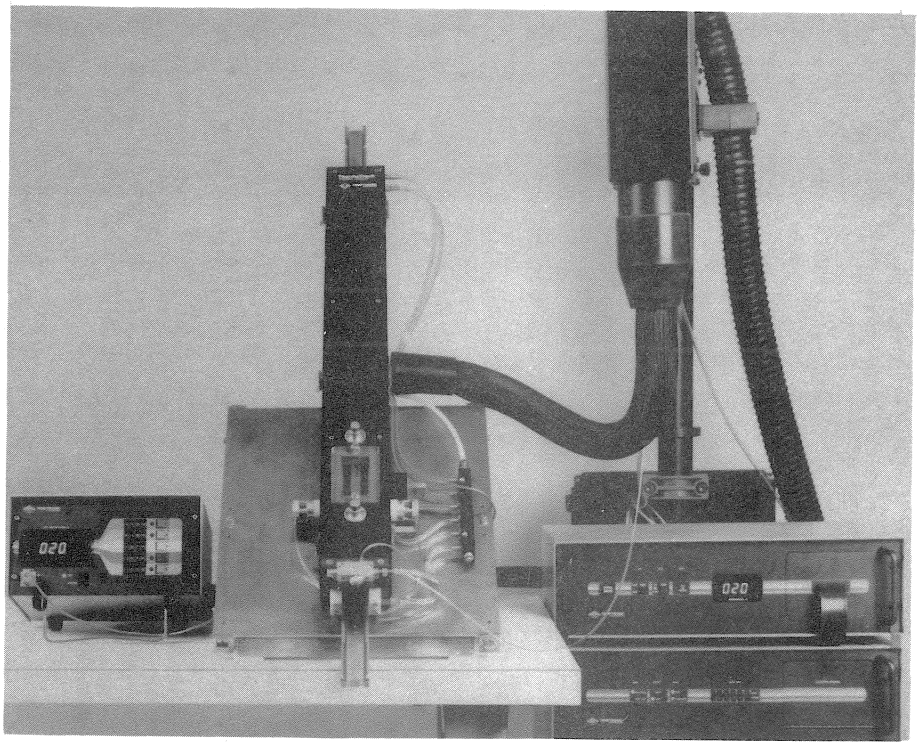

Figure B-3.3. MiniHandler Interfaced to TP0412A System With DUT Option.

APPENDIX B-4
TP0412A THERMOSTREAM® SHROUDS AND INSULATION KIT

B-4.1 SHROUDS

Shrouds or enclosures, as they are sometimes called, are provided with each of the optional ThermoCaps available for the TP0412A ThermoStream® System. The system's performance will be effected as will your desired test results, if operated without the shrouds or ThermoCap.

The shrouds are soft, flexible and can be easily aligned with the test socket. Their purpose is to encapsulate the DUT and retard the escaping temperature controlled gas enabling better heat transfer to take place.

Currently, there are five (5) standard sizes available as either conductive or non conductive. The ThermoCap and nozzle assembly have been designed to readily accommodate both types. Since the shroud simply slips over the nozzle, it is easily removed, allowing another size to be reinstalled. If the standard shrouds do not meet the requirement, then a substitute enclosure, capable of withstanding the system temperatures, should be fabricated.

The shrouds are included in the ThermoCap(s) kit. Only those sizes which will fit inside the ThermoCap(s) purchased will be supplied. It is possible to purchase replacement shroud kits, see page B-4.2.

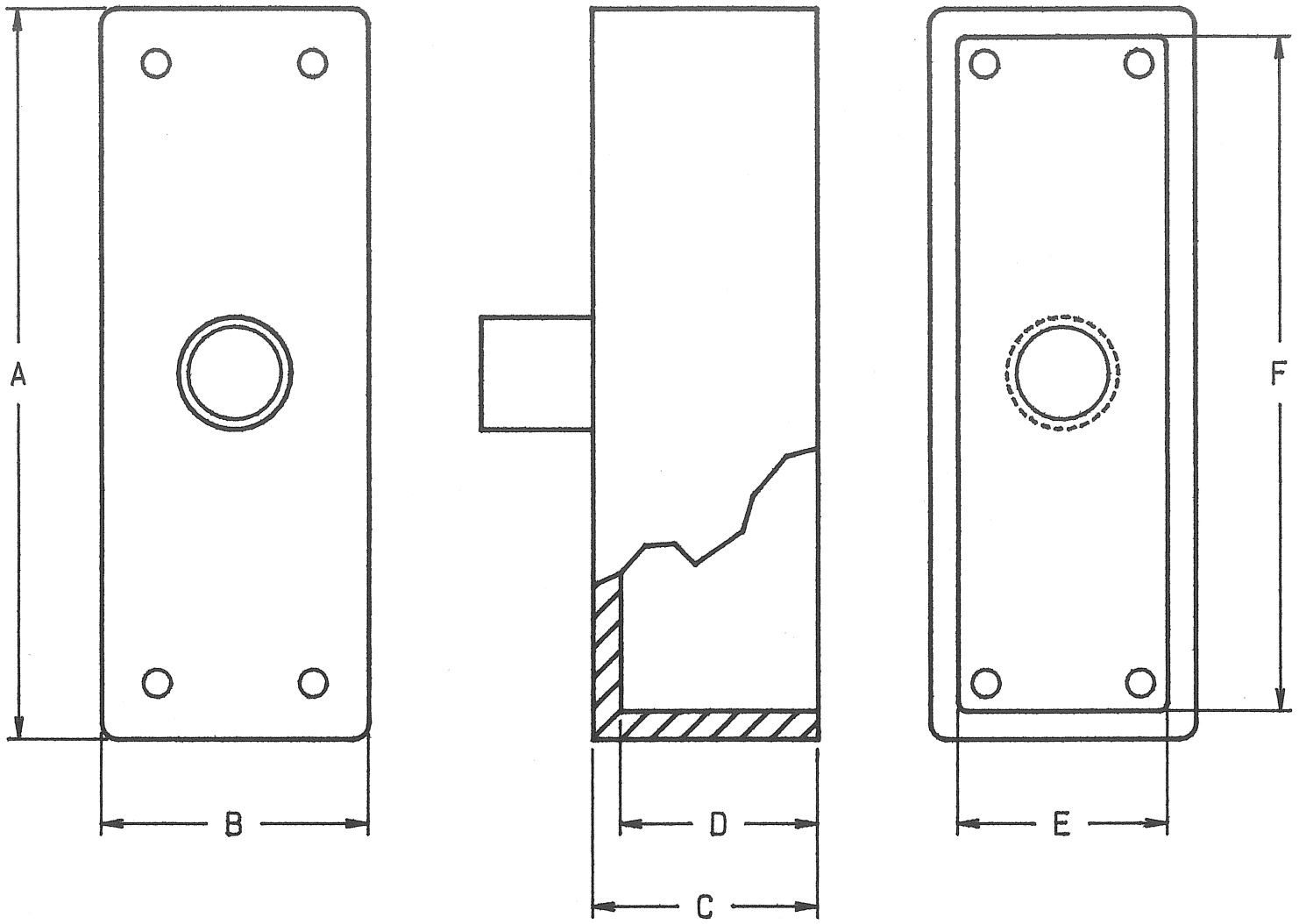

SHROUD KIT #		DIMENSIONS (INCHES)						
NON-CONDUCTIVE	CON-DUCTIVE	A	B	C	D	E	F	QTY. EACH
ZAK41311	ZAK41312	1.25"♦ 1.62" 3.05"	---- 1.25" 1.55"	.87" .87" .87"	.75" .75" .75"	1.00"♦ 1.00" 1.30"	---- 1.37" 2.80"	1 1 1
ZAK41321	ZAK41322	2.75" 3.75"	2.75" 1.55"	1.00" .87"	.75" .75"	2.50" 1.18"	2.50" 3.50"	1 1
ZAK42491	ZAK42492	1.25"♦ 1.62"	---- 1.25"	.87" .87"	.75" .75"	1.00"♦ 1.00"	---- 1.37"	1 1

♦-IS DIAMETER SYMBOL.

B-4.2 INSULATION KIT

Every TPO412A ThermoStream[R] System, is supplied with an Insulation Kit (P/N ZAK 40480) to be used around the test site to protect the tester components from the temperature extremes and moisture. The kit consist of three (3) 12" X 12" silicon foam rubber sheets of various thicknesses (1 - 1/8", 1 - 1/4" & 1 - 1/2" thick) and a tube of silastic. This kit should be applied as outlined in Appendix C-2. When Conductive Shrouds are requested a conductive pad (12" X 12" X 1/8") is supplied for the test site.

APPENDIX B-5
REMOTE MODULE OPTION FOR TEMPERATURE SET SWITCH MODULE

B-5.1 INTRODUCTION

This option, shown in Figure B-5.1, is provided for operator convenience. It allows either the single TEMPERATURE SET switch module or the five TEMPERATURE SET switch module, depending on system configuration, to be located up to 12 feet away from the microprocessor controller by means of an optional ribbon cable. An enclosure suitable for table top use, is also provided to house the TEMPERATURE SET switch(s).

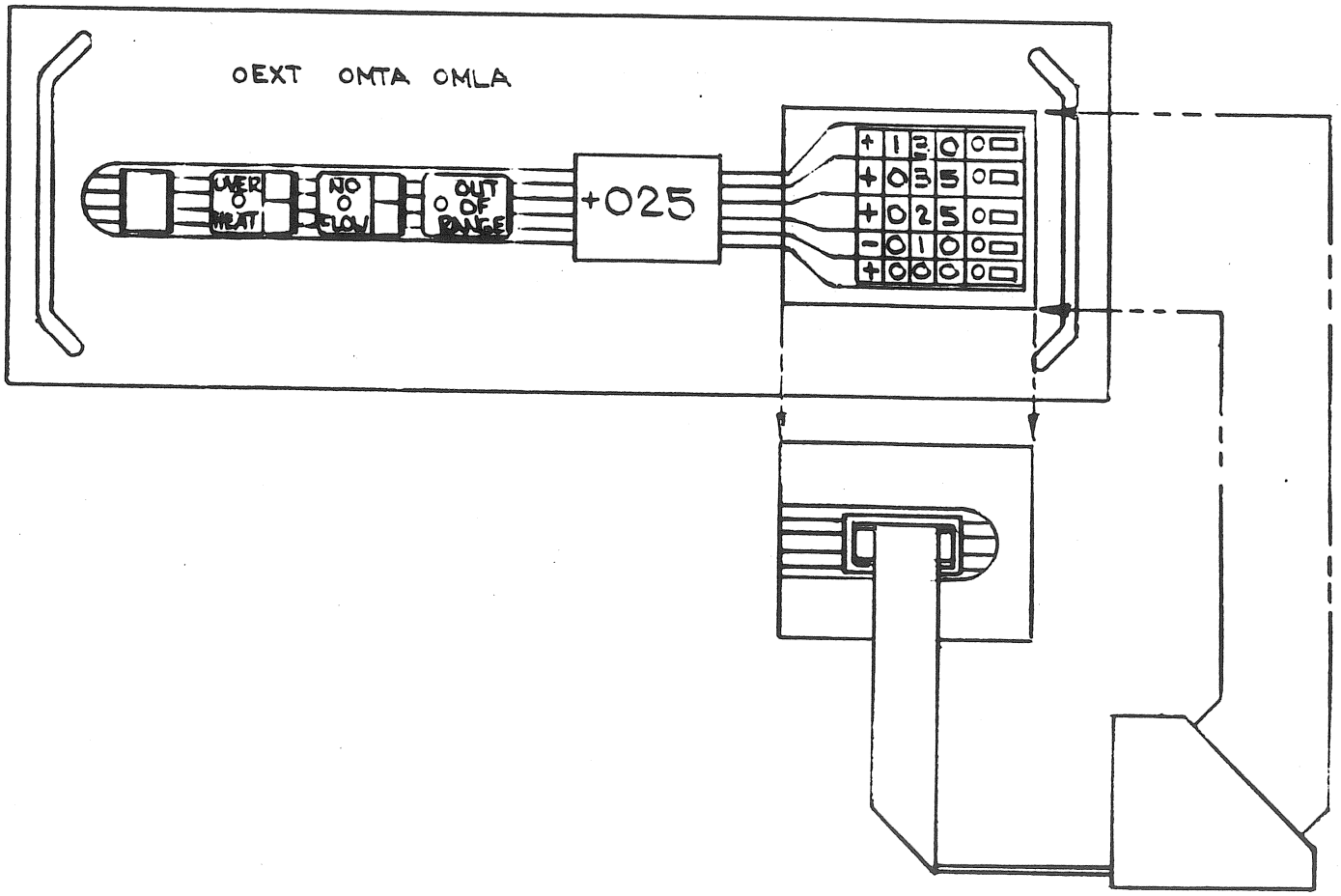

Figure B-5.1. Remote TEMPERATURE SET switch option.

B-5.2 INSTALLATION

To install this option simply;

1. Turn the system "OFF" following the shut down procedure outlined in Section 3-7 of the operating manual.
2. Turn the thumb screw securing the TEMPERATURE SET switch module assembly in the front panel counter clockwise.
3. Remove the TEMPERATURE SET switch module from the front panel.
4. When mounting the supplied blank panel and cable assembly into front panel cavity properly make cable connection.
5. Secure the panel in place using the thumb screw.
6. Insert the TEMPERATURE SET switch module into the table top enclosure.
7. Secure the TEMPERATURE SET switch module in place using the thumb screw.
8. Ensure all other system connections.
9. Turn the system "ON" by depressing the system POWER switch. The system is ready for normal operation.

APPENDIX B-6
BUCK BOOST TRANSFORMER OPTION

B-6.1 INTRODUCTION

A buck boost transformer is offered as an accessory option to the TP0412A ThermoStream® System. This accessory allows a user to condition (within reason) the available power to meet the power requirements of the TP0412A ThermoStream® System as specified in Section 1 of the manual.

The transformer is supplied (reference drawing D4058, next page) with a power cord and a receptacle. The power cord connects to the ac power source and the system power cord connects to the receptacle.

When ordering this accessory refer to the data plate located on the rear panels or the power cord male plug to determine system amperage requirements.

AMPERAGE REQUIREMENTS	TRANSFORMER PART #
30 amps.	ZAK 40580
20 amps.	ZAK 40584

REVISIONS				
ZONE	LTR	DESCRIPTION	DATE	APPROVED
	G	ECN 2984		
	H	ECN 4058H	10-18-89	

REV	ECN NO	DATE
C	2597	3-85
D	2625	2-85
F	2708	5-85
G	2984	3-86

SEE NOTE 1

VIEW C-C

SEE NOTE 1

VIEW B-B

KNOCKOUT "A" IS OPTIONAL BY MANUFACTURER. IF SUPPLIED DO NOT OPEN THESE KNOCKOUTS.

THIS HARDWARE SUPPLIED WITH BOX AND RECEPTACLE

REMOVE TRANS.COVER SCREW SO BOX WILL FIT FLUSH

SUPPLIED WITH FITTINGS

8'

INCLUDES HARDWARE

SUPPLIED WITH TRANSFORMER

AFTER BOX IS INSTALLED USE THIS HOLE AS PILOT AND DRILL INTO SIDE OF TRANSFORMER BOX; THEN INSTALL #8 HARDWARE

USE THIS KNOCKOUT AND INSTALL AS SHOWN ABOVE

VIEW A-A

CONNECTIONS
(FOR APPROX 14 VOLT BOOST)

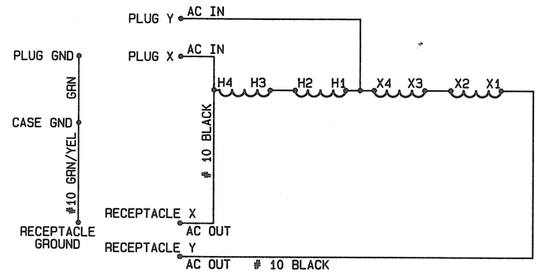

USE ITEM 10 FOR CASE GNDS
USE ITEMS 8 & 15 FOR CONNECTIONS
X1- AC OUT
X2- X3
X4- HI AC IN
H4- AC IN- AC OUT
USE ITEMS 9 & 15 FOR CONNECTIONS
H2-H3

NOTES :
1. FOR ZAK40580 AND ZAK40584 REMOVE ENTIRE KNOCKOUT ON BACK VIEW ONLY; ON FRONT SIDE REMOVE SMALLER CENTER KNOCKOUT.
FOR ZAK40582 REMOVE SMALLER CENTER KNOCKOUT ON BOTH FRONT & BACK.

-0 ONLY			
APPENDIX B-6	LN51470	TP041R	
TP41R LISTING			
NEXT ASSY	USED ON	SYSTEM	
APPLICATION			

UNLESS OTHERWISE SPECIFIED DIMENSIONS ARE IN INCHES
TOLERANCES ARE:
FRACTIONS ± 1/64 DECIMALS .XX ± .01 .XXX ± .005 ANGLES ± 30'
MATERIAL
FINISH
DO NOT SCALE DRAWING

TEMP. STOCK NO.	NOMENCLATURE OR DESCRIPTION	MFG. PART NO.	ITEM
	PARTS LIST		

CONTRACT NO.

TEMPTRONIC CORP.

APPROVALS	DATE
DRAWN B.DELPRETE	12-19-84
CHECKED	
ENG JIM CROZER	1-3-85

BUCK & BOOST TRANSFORMER
(APPENDIX B-6)

UNLESS OTHERWISE SPECIFIED RESISTANCE VALUES ARE IN OHMS ± % WATT
CAPACITANCE VALUES ARE IN ± % VOLTS

SIZE	CODE IDENT NO.	DRAWING NO.	REV
D		4058	H

SCALE 1:1 SHEET 1 OF 1

FOTOBEAM/BROOKSIDE 0228-D

APPENDIX B-7
5 TEMPERATURE SET SWITCH OPTION

B-7.1 INTRODUCTION

This option, shown in Figure B-7.1, replaces the single TEMPERATURE SET switch located on the microprocessor controller front panel of the TP0412A ThermoStream System.

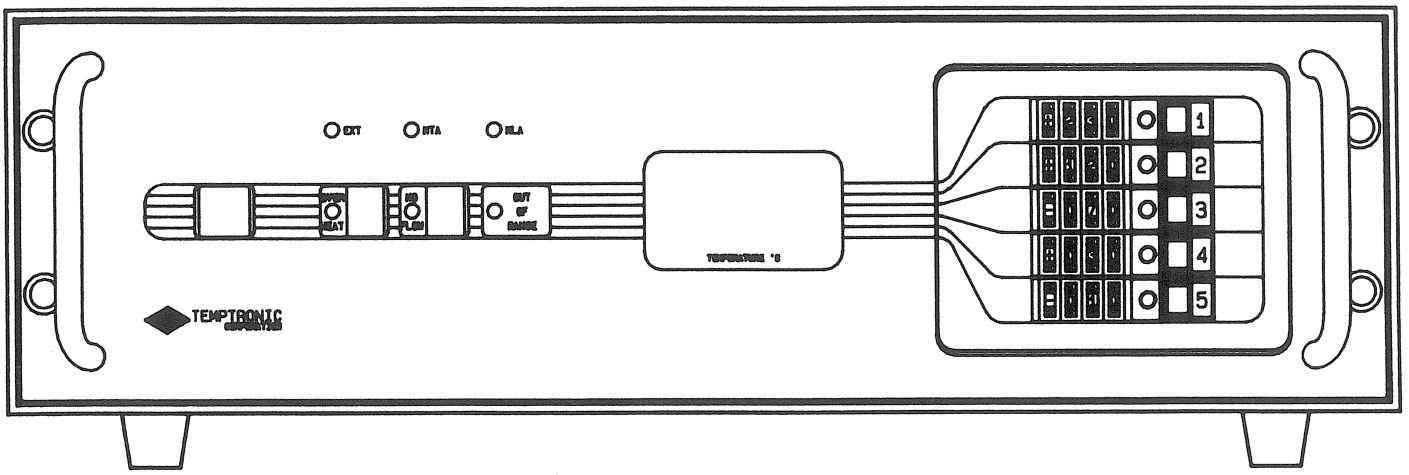

Figure B-7.1. 5 TEMPERATURE SET switch option.

This is a self-contained module consisting of 5 TEMPERATURE SET switches, corresponding select switches, and AT TEMP indicators. The purpose of this option, is to allow 5 temperatures to be preset at the start of a test sequence enabling rapid switching from one test temperature to another, without the delay necessary to reset the pushbutton settings.

During Start-Up and when RESET is pressed switch #3 is selected. Switch #3 must be used when initiating either the -980 or -990 codes.

B-7.2 INSTALLATION

To install this option simply;

1. Turn the thumb screw securing the single TEMPERATURE SET switch module assembly in the front panel counter clockwise.
2. Remove the single TEMPERATURE SET switch module from the front panel.
3. Insert the 5 TEMPERATURE SET switch module in place.
4. Secure the 5 TEMPERATURE SET switch module in place using the thumb screw.

B-7.3 INTERNAL DIAGNOSTICS

Refer to the -992 Routine outlined in Section 6-3.3 if a problem with either a switch of indicator is suspected.

APPENDIX B-8
TP0412 IEEE-488 OPTION

B-8.1 INTRODUCTION

The Temptronic IEEE-488 interface option, is available as an I/O port and address switch mounted on the microprocessor temperature controller rear panel, with a special software package supplied in a PROM chip.

The TP0412 IEEE-488 interface was developed to be consistant with the IEEE Standard 488-1978 specifications, see Section B-8.4. For a detailed explanation of the IEEE-488 functions, it is suggested that a copy of Hewlett-Packard's publication entitled "TUTORIAL DESCRIPTION OF THE HEWLETT-PACKARD INTERFACE BUS" revision January 1983, be obtained.

Initially, it is recommended that the TP0412 system be operated in the manual/local mode (from the system front panel), to become familiar with system operation prior to attempting external means of control. This will also verify normal system operation. Refer to Section 3 of the system manual for these procedures.

Since the Temptronic system is only a "Talker" or a "Listener", a bus controller is required to complete the interface system. A bus controller is a device capable of specifying the "Talkers" and "Listeners" for an information transfer, itself included.

When the TP0412 system is being operated in the calibration mode, see Section 5-3.2.2 (-990 routine) in the system manual, it will not respond to the bus controller commands.

Should the system be suspected of malfunctioning while under external control, it is suggested that it be operated in local mode to isolate the problem. To return to local control simply depress the RESET switch.

B-8.2 BUS INTERFACING

Figure B-8.1 shows the TP0412 IEEE-488 I/O and the address switch. The following rules apply when interfacing to the bus:

1. Total number of devices on any given bus should not exceed 15.
2. Total cable length should not exceed 2 meters times the number of devices on the bus or 20 meters maximum.
3. Make cable connections when bus is inactive (non-functioning).
4. Do not connect more than 2 cables to the TP0412 IEEE-488 I/O.
5. Tighten connector mounting screws only finger tight.

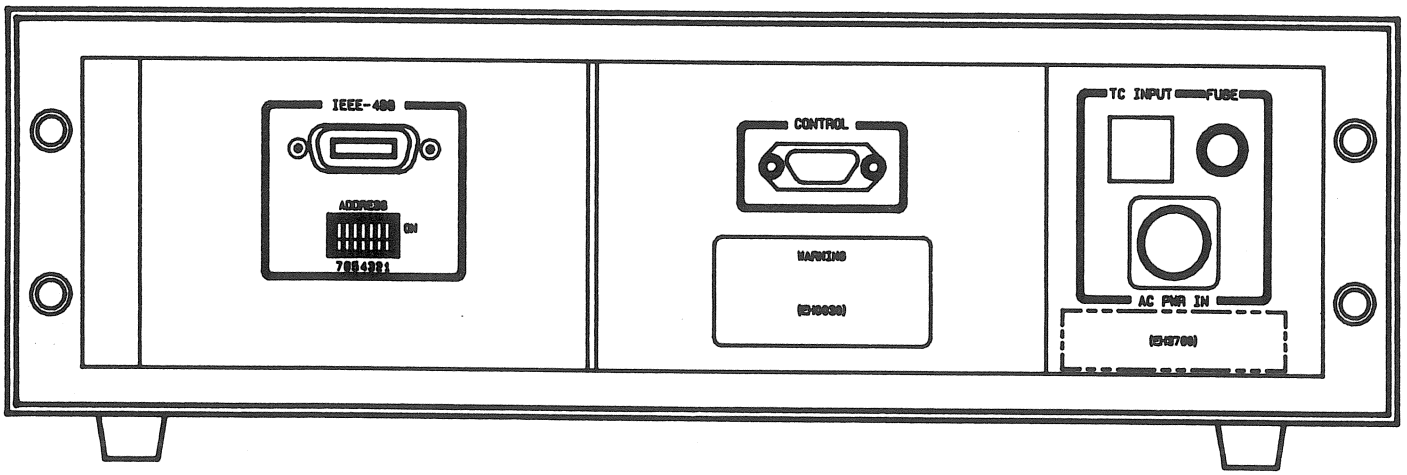

Figure B-8.1. TP0412 IEEE-488 I/O.

B-8.3 OPERATION UNDER IEEE-488

Under IEEE-488 operation/control, the following functions are possible. It should be noted that items 6 through 8 require certain options be installed to be effective.

1. Temperature setting
2. Time at temperature (soak time)
3. Specifying upper and lower temperature limits within the factory set temperature limits of the system
4. Switching air flow on or off (The rate of air flow is manually adjusted, see Section 3 of the system manual.)
5. Select FLOW modes (Automatic, Transition only, Test only or both Transition and Test)
6. Select control of air or device temperature [DUT option]
7. Select 1 of 4 different preset rates of air temperature change (see pages 3-26 and 3-27 of the system manual) [DUT option]
8. Stand up or down [stand option]

B-8.3.1 Address Switch Setting

Each device on a bus must have its own unique address. The first five (numbers 1-5) toggles of the rear panel DIP switch set the TP0412 address. Each switch corresponds to a binary value; the sum of the binary value(s) of all the "on" (active) switches is the address.

SWITCH NUMBER	BINARY VALUE
1	1
2	2
3	4
4	8
5	16

A switch is "on" (logical 1) when the top of the switch is depressed and its binary value contributes to the address. Diagnostic routine -997 is provided in the software to verify the switches, see Section 6-3.9.

Note: The address switch is read during the power up sequence. If it is necessary to change the address after power up simply set the switch to the new address and depress the RESET switch (Flow will be stopped when RESET is depressed).

B-8.3.2 Start-Up Under IEEE

Before powering the system the following should be performed:

1. Set the address switch to the desired address.
2. Orient the controller such that the EXT, MTA and MLA indicators on the front are visible to the operator.
3. Check the MODE switch position and set, if necessary to the desired position (Heat/Cool or Heat Only). (Switch is located behind the hinged panel in the power controller.)

Depress the front panel power switch to power on the TP0412. During the power on sequence IEEE, communication with the microprocessor is possible. However, all TP0412 control functions are disabled until the sequence is completed as signified by the "READY" indicator, see Section 3 of the system manual. The power on sequence lasts approximately 10 minutes. After receiving the "READY" indication, the TP0412 will respond functionally to the bus controller commands.

When the TP0412 is under the control of the bus controller, the EXT indicator will be lit and periodically the MTA (my talk address) and MLA (my listen address) indicators will light indicating that the system has been addressed to send ("TALK") or receive ("LISTEN").

B-8.3.3 Command Messages

The command messages are segregated into two (2) groups, those for exercising functional control and those for causing the TP0412 to send information. The syntax for receive functional commands is comprised of two (2) letters followed by an option or numeric argument. Commands which cause the TP0412 to send data, are simply two (2) alpha characters. The TP0412 will only accept the range of numbers defined and system performance is undefined if syntax is violated.

The Receive message commands prompt the TP0412 to "Listen" and establish internal conditions, accept new control parameters (set temperature, upper/lower limits, etc.) and in general are the functional control group. A listing of these commands is in Section B-8.4.

The send messages cause the TP0412 to "Talk" sending specific requested data to the bus controller. A listing of these commands is in Section B-8.4.

B-8.3.3.1 Setting Temperature, Stand and Flow Control

If the desired interface has been established, it should now be possible to control the TP0412 from the bus.

The following examples will first set a positive temperature, then a negative temperature. For the system to achieve a negative temperature, the MODE switch must be in the Heat/Cool position, verify at this time. If the system has been operating in the Heat Only mode, a "WAIT" indication will be observed when the switch position is changed then after a 10 minute time delay, a "READY" indication will be given.

1) Output the following: "RS70RD0RW1"

RS70 (Receive Set Temperature 70) Note: No plus (+) sign or leading zeros (0).

RD0 (Receive stanD 0 [0=down]) Note: It is prudent to place the head in the down position when not at ambient temperature. A surface capable of withstanding the entire temperature range should be used to stop the head.

RW1 (Receive floW 1 [1=auto]) Note: Turns air flow on in auto mode which uses first the transition flow setting until the set temperature (within ±2°C) is attained then switches to the test flow setting.

2) After the TP0412 has reached and is controlling at 70°C output the following: "RS-40RD0RW1"

RS-40 (Receive Set Temperature -40) Note: Negative (-) sign required and no leading zeros (0).

RD0 (Receive stanD 0 [0=down]) Note: It is prudent to place the head in the down position when not at ambient temperature. A surface capable of withstanding the entire temperature range should be used to stop the head.

RW1 (Receive floW 1 (1=auto) Note: Puts air flow control in auto mode using first, the transition flow setting then the test flow setting after reaching AT TEMP (±2°C of set temperature).

Note: Repeating condition commands (flow, stand, etc.) is preferred practice in process environments. The TP0412 will interpret redundent commands unambiguously.

B-8.3.3.2 Example for Requesting Information

A typical request is to ask for the current temperature.

Simply output: "ST"

ST (Send current Temperature) Note: The system responds by sending a variable character string consisting of the current celcius (°C) temperature with its corresponding sign (±) as sensed by the control thermocouple.

B-8.3.3.3 Service Requests

Due to the complexity of handling interrupts, it is recommended that service requests (SRQs), be explored only when considerable system confidence has been established.

B-8.3.3.4 HP-85 Examples

The following document (LMS1630) is provided here to show examples of performing single commands using the HP-85.

IEEE NOTES FOR OPERATING THE TP0412A WITH AN HP-85

1. It is possible to operate the TP0412A SYSTEM with the HP-85 providing the HP-85 is configured with an IEEE-488 interface and the IEEE-488 option is installed in the TP0412A SYSTEM.

2. The commands may be entered as a series of single commands or as a string. The following shows how single commands are input.

   - OUTPUT 70n;"RS25"<END LINE>

     OUTPUT 70n; This is the required format for the HP-85, where n is whatever the TP0412A address switch setting is (ie. OUTPUT 709; indicates the address switch is set to 9, likewise OUTPUT 711; indicates the address switch is set to 11).

     "RS25" This is the message syntax for Receive Set temperature 25(^{0}C)

     The <END LINE> is always required.

   - OUTPUT 70n;"RW0"<END LINE>

     OUTPUT 70n; This is as before.

     "RW0" This is the message syntax for Receive floW off.

   - OUTPUT 70n;"RD1"<END LINE>

     OUTPUT 70n; This is as before.

     "RD1" This is the message syntax for Receive stanD up.

3. The following shows how the commands may be combined in a string.

   - OUTPUT 70n;"RS75RD0RW1"<END LINE>

     OUTPUT 70n; This is as before.

     "RS75....." This is the message syntax for Receive Set temperature 75(^{0}C)

     "....RD0..." This is the message syntax for Receive stanD down.

     ".....RW1" This is the message syntax for Receive floW on.

REFER TO PAGE B-8.15 FOR A LISTING OF THE RECEIVE ("LISTEN") COMMANDS RECOGNIZED BY THE TP0412A SYSTEM.

4. To display information (for example the current temperature) on the screen do the following:

- OUTPUT 70n;"ST"<END LINE>
  ENTER 70n;A$<END LINE>
  DISP A$<END LINE>
  _____ (the temperature would appear on the screen at this point)

  OUTPUT 70n; This is as before.

  "ST" This is the message syntax for Send current Temperature. At this point the TP0412A puts the current temperature into the output buffer.

  ENTER 70n;A$ This has the HP-85 read the TP0412A output buffer and store the information in a register (by replacing A$ with a keyboard character such as T it is possible to designate the register where the information is to be stored).

  DISP A$ This has the HP-85 display what is stored in register A$.

5. To print information (for example the current temperature) do the following:

- OUTPUT 70n;"ST"<END LINE>
  ENTER 70n;A$<END LINE>
  PRINT A$<END LINE>
  _____ (the temperature will print at this point)

  OUTPUT 70n; This is as before.

  "ST" This is as before.

  ENTER 70n;A$ This is as before.

  PRINT A$ This has the HP-85 print what is stored in register A$.

REFER TO PAGE B-8.16 FOR A LISTING OF THE SEND ("TALK") COMMANDS RECOGNIZED BY THE TP0412A SYSTEM.

6. When in LOCAL mode and wanting to go to REMOTE mode one of two methods is acceptable;

- type REMOTE 70n<END LINE> The REMOTE lamp turns on and the system will respond to commands within the Receive and Send Groups.

OR

- Send a recognized command such as OUTPUT 70n;"RSnnn"<END LINE>

7. When in REMOTE mode and wanting to return to LOCAL mode one of two methods is acceptable;

   - Type LOCAL 70n<END LINE> The REMOTE lamp goes out and the system will control at the last SET POINT entered.

   OR

   - Depress <RESET>

   NOTE: When in REMOTE and an OVER HEAT condition is experienced it is necessary to depress the <RESET> twice. Once to return to LOCAL and secondly to clear the condition provided the fault has been corrected.

8. S = SPOLL (70n)<END LINE>
   DISP S<END LINE>
   _____ (the status byte of polled address appears after DISP S<END LINE>) Refer to Appendix B-8 in manual for Status Byte information.

   If the answer was 69 for example;

   64 - this address generated SRQ
   4 - Not Busy
   1 - At Temperature
   69

SAMPLE PROGRAMS USING HP-85 INTERFACED TO TEMPTRONIC TP0412A THERMOSTREAM[R] SYSTEM

NOTE: TP0412A Address was set to 9 for the following examples.

EXAMPLE 1

Displaying Temperature

```
  3 OUTPUT 709;"RS10"
 10 OUTPUT 709;"ST"
 20 ENTER 709;A$
 30 DISP A$
 35 FOR I = 1 TO 100
 36 NEXT I
 38 GOTO 10
 40 END
```

EXAMPLE 2

Printing Temperature
(Airstream Temperature)

```
  3 OUTPUT 709;"RS90"
 10 OUTPUT 709;"ST"
 20 ENTER 709;A$
 30 PRINT A$
 35 FOR I = 1 TO 100
 36 NEXT I
 38 GOTO 10
 40 END
```

EXAMPLE 3

Printing Temperature
(Device Temperature;
DUT Option Installed)

```
  3 OUTPUT 709;"RS-25"
 10 OUTPUT 709;"SV"
 20 ENTER 709;A$
 30 PRINT A$
 35 FOR I = 0 TO -100
 36 NEXT I
 38 GOTO 10
 40 END
```

REFERENCES

"TUTORIAL DESCRIPTION OF THE HEWLETT-PACKARD INTERFACE BUS"
Copyright Hewlet-Packard Company 1980, November 1980, Rev. January 1983

"COMPUTER CONTROLLED TESTING AND INSTRUMENTATION", An Introduction to the IEC-625: IEEE-488 Bus, Martin Colloms B.Sc.(Hons.), C.Eng., M.I.E.E., Copyright 1983, Pentech Press, London: Plymouth, published 1983, International Standard Book Number (ISBN) 0-7273-0310-4

"IEEE STANDARD DIGITAL INTERFACE FOR PROGRAMMABLE INSTRUMENTATION", IEEE RECOMMENDED PRACTICE FOR CODE AND FORMAT CONVENTIONS FOR USE WITH ANSI/IEEE STD 488-1978, Introduction by Donald C. Loughry, Copyright 1983, The Institute of Electrical and Electronics Engineers, Inc., ISBN 471-80786-9, Library of Congress Number 83-83197

B-8.4 SPECIFICATION

The following is a reproduction of the preliminary specification for the Temptronic Corporation TP0412A IEEE-488 function.

The following is a listing of the IEEE function subsets to be supported.

SH1: Complete Source Handshake Interface Function.

AH1: Complete Acceptor Handshake Interface Function.

T6: A subset of the Talker Functions which includes Basic Talker, Serial Poll and Unaddress If MLA.

TE0: The extended talker functions are not supported.

L4: A subset of the Listener Functions which includes Basic Listener and Unaddress If MTA.

LE0: The extended listener functions are not supported.

SR1: Complete Service Request Interface Capability.

RL1: Complete Remote Local Function Capability.

PP0: No Parallel Poll capability.

DC1: Complete Device Clear Function Capability (the device clear state for the Temptronic device is the power up state).

DT0: No Device Trigger Capability.

C0: No controller function.

Device Clear: Clears Over Heat, Flow Error, any pending IEEE-488 message and turns off flow

These function subsets fully describe the interaction of the instrument with the bus. They do not define the syntax of transmitted messages the way the instrument generates service requests and responds to serial polls. These areas which are of concern to the user in terms of writing Temptronic Device dependent software, are defined as follows.

Service Request Function (SRQ): Temptronic device has the capability of requesting service by the bus controller. Any one or combination of events can cause an SRQ. The bus controller typically, then conducts a Serial Poll under software control to discover which instrument on the bus requested service and the reason for the request. A single byte of information is allowed for this response.

The following conditions set the associated bit in the status byte which is returned in response to a serial poll. (1 if true; 0 if false)

STATUS BYTE

BIT	CONDITION
0	AT TEMP
1	Not AT TEMP
2	OUT OF RANGE has occured
3	Flow error has occured
4	Overheat has occured
5	Message not executed (message not understood)
6	RSV (indicates this device generated SRQ, see below)
7	Reset has occured (either Front Panel or Power on)

If one or more of the bits 0 through 7, excluding the 6 bit, of the status byte makes a transition from 0 to 1 and the corresponding bit in the interrupt mask is also 1, then bit 6 of the status byte will go to 1 generating an SRQ. The SRQ will remain pending until a serial poll is performed which will clear bit 6. The status byte will not change while an SRQ is pending.

At Power on, bits 0 to 5 of the interrupt mask are set to 0. Bit 7 is set to 1 if rear panel switch #6 is set to 1. SELECTED DEVICE CLEAR (SDC) or DEVICE CLEAR (DCL) clears all bits of the interrupt mask and the status byte. Front panel RESET clears bits 0 to 5 of the interrupt mask and leaves bit 7 unchanged.

Receive Group: Messages sent to the Temptronic device. This is the function and control group.

Message Syntax: Two letters and an optional number. Examples below;

RSnnnn....Receive Set temperature (ignored in local)
RUnnnn....Receive Upper limit
RLnnnn....Receive Lower limit
RMn.......Receive Mask (SRQ mask byte)
RDn.......Receive stanD (n=0 down, n=1 up)
RWn.......Receive floW (0=off, 1=auto)
RKnnn.....Receive soaK (0-999 seconds)
RCn.......Receive Control (0=air, 1=device [DUT option])
RYn.......Receive device tYpe (n=0-3 [DUT option])
ROn.......Receive air mOde where;

- n=0 - automatic switching from TRANSITION to TEST
- n=1 - TEST valve only
- n=2 - TRANSITION valve only
- n=3 - TRANSITION and TEST valves open (combined flow)

The number format for these messages (nnn above) would be plus sign and leading zeros optional; minus sign mandatory.

Messages should be terminated with a Line Feed or an END (Carriage Return is ignored).

Send Group: Messages which when received, cause the Temptronic device to transmit the desired information when next addressed to talk.

ST.....Send current Temperature
SV.....Send current deVice temperature
SS.....Send current Set temperature
SU.....Send Upper limit
SL.....Send Lower limit
SM.....Send SRQ Mask
SF.....Send condition Flags
SE.....Send Error conditions
SA.....Send Auxiliary flags
SO.....Send air mOde
SY.....Send device tYpe

Messages sent by the Temptronic device would have the following formats:

Temperature Information; numeric digits, minus (-) sign if required, no leading zeros (eg; "25", "-10", "125", etc.) followed by a Carriage Return, Line Feed (with END asserted during Line Feed).

SRQ Mask; a decimal number between 0 and 255 sent as one byte (bit 6 is ignored when received and is always a "0" when sent) followed by a Carriage Return, Line Feed (with END asserted during Line Feed).

Condition Flags; a decimal number between 0 and 255 sent as one byte with the following format-

Bit 0.....at temp (1=at temp)
Bit 1.....out of range (1=out of range)
Bit 2.....inhibit heat power (1=power inhibited)
Bit 3.....remote (1=remote, 0=local)
Bit 4.....lockout (1=front panel locked out if remote)
Bit 5.....error condition (any 1 of the error conditions)
Bit 6.....not assigned (=0)
Bit 7.....not assigned (=0)

Carriage Return, Line Feed (with END asserted during Line Feed).

Error Conditions; a decimal number between 0 and 255 sent as one byte with the following format-

Bit 0.....overheat error
Bit 1.....open loop error
Bit 2.....not assigned (=0)
Bit 3.....flow error
Bit 4.....not assigned (=0)
Bit 5.....not assigned (=0)
Bit 6.....not assigned (=0)
Bit 7.....not assigned (=0)

Carriage Return, Line Feed (with END asserted during Line Feed).

APPENDIX B-9
BCD OPTION

B-9.1 INTRODUCTION

This option enables the TP0412A ThermoStream® System to be interfaced with an external device using the BCD format. This capability is provided in a special software package supplied in a PROM chip. The Temptronic microprocessor controller responds to the following two (2) commands:

1. Set Temperature Input. Received in parallel from the BCD bus when a "Data Ready" is active. This line generates the same interrupt as does the IEEE-488 option.

2. Current Temperature Output. This value is inverted before being output on the bus only if the BCD "External Enable" line is active. It is output once every 400msec.. A "Data Ready" output line is toggled once every 200msec..

External Set Temperature Connection

The required external Set Temperature connection is made at the rear of the microprocessor controller with a 36-pin Cinch 57-30360 type plug or equivalent and a closure from pin 18 to pin 36. The input signal from the external element must be TTL/DTL compatible. The signal transmitted through the particular pin connections are given in Table B-9.1.

Table B-9.1. Interface connector pin assignments.
(All signals TTL "1" = TRUE)

Pin Number	Signal	Function
1	Temperature Out	1 (LSB)
2	Temperature Out	2
3	Temperature Out	4
4	Temperature Out	8
5	Temperature Out	10
6	Temperature Out	20
7	Temperature Out	40
8	Temperature Out	80
9	Temperature Out	100
10	Temperature Out	200
11	Temperature Out	400
12	Temperature Out	800 (MSD)
13	NC	
14	Temperature Out Polarity	"1" = (+)
15	Data Ready (Temperature Out) 10 hz square wave	
16	At Temperature	
17	NC	
18	Logic GND	
19	External Temperature Set	1 (LSB)
20	External Temperature Set	2
21	External Temperature Set	4
22	External Temperature Set	8
23	External Temperature Set	10
24	External Temperature Set	20
25	External Temperature Set	40
26	External Temperature Set	80
27	External Temperature Set	100
28	External Temperature Set	200
29	External Temperature Set	400
30	External Temperature Set	800
31	External Temperature Set Polarity	"1" = (+)
32	Overheat	
33	Data Ready (Strobe) External Temperature Set 10-us pulse required	
34	Out of Range (Temperature Set)	
35	NC	
36	External Enable Jumper between pins 18 and 36 or logical ground at pin 36 enables EXTERNAL CONTROL SELECT switch	

NOTE

Pins 1-17, 32, and 34 are output signals.

Pins 19-31 and 33 are input signals.

B-9.2 INTERNAL DIAGNOSTICS

Refer to the -998 routine outlined in Section 6-3.10.

APPENDIX B-10
TP0412A DUT CONTROL OPTION

B-10.1 INTRODUCTION

The Device Under Test (DUT) option, (see Figure B-10.1) as supplied is a complete assembly which easily attaches via two ribbon cables to the TP0412A controller PCB and accommodates the TEMPERATURE SET switch module.

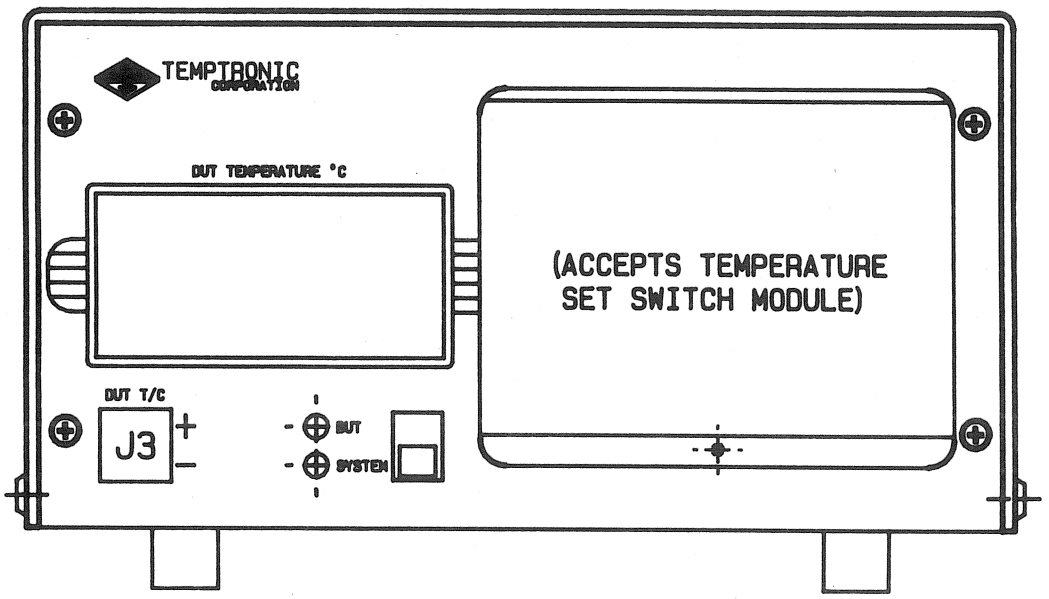

Figure B-10.1. DUT Option Console

The following reprint of an article published in the October 1984 issue of Evaluation Engineering magazine discusses the purpose and advantage to DUT control.

Improving Throughput and Accuracy When Testing Devices

by George Eager and Peter Selverstone, Temptronic Corp., 55 Chapel St., Newton, MA 02158 (617) 969-2501

High and low temperature testing of electronic components and modules at the tester socket rather than in a temperature chamber has become very common. This technique has spread from research and quality control labs to the production floor. Airstream systems, developed during the past decade, which direct temperature controlled air at the component in the test socket are typically employed for this function **(Figure 1)**.

Airstreams are designed to deliver temperature controlled air, but many users are concerned with the temperature induced in the DUT. The usual approach to thermal control in airstream systems is to sense the temperature of the air near, but not in contact with, the DUT. Methods which control the temperature of the DUT itself have the potential to improve both throughput and accuracy in many airstream applications.

This article compares the nature and effect of:

- Conventional Air Temperature Control—single sensor in airstream.
- Single Loop Device Temperature Control—single sensor in contact with the DUT.
- Dual Loop Device Temperature Control—both air and DUT temperatures controlled.

Conventional Air Temperature Control

In this case, the temperature sensor of the airstream system is usually located at the airstream outlet near the DUT **(Figure 2)**. Good airstream system performance requires rapid transition from one air temperature to another, minimal overshoot or undershoot when arriving at a temperature and very low deviation from steady setpoints. To achieve this performance of controlled damping and low steady state error, an airstream system requires a carefully designed control system.

The airstream temperature is controlled by regulating power applied to the heater **(Figure 3)**. The temperature controller used generally has a Proportional-Integral-Derivative (PID) algorithm optimized for minimum overshoot during setpoint transitions and closely regulated temperature while in steady state. The airstream temperature controller may be implemented with analog circuitry or a microprocessor. In either case, derivative (anticipatory) control action is used to ensure stability of the system and integral control optimizes steady state performance. The control time constants are usually preset by the airstream manufacturer so that the user is not required to perform the tedious process of controller optimization.

The rate at which the temperature of a DUT can be changed and the ultimate temperature achieved are functions of several variables including device size and material, the test fixture, air flow rate and air temperature. Because heat is transferred to and from a test specimen by forced air convection, device temperature will not necessarily be the same as air temperature. Even after long soak periods some temperature offset may exist.

Offset and device transition time can be reduced by maximizing the coupling of the airstream with the DUT. This can be accomplished by the use of a cap and enclosure to minimize the volume surrounding the specimen. Reduction of the enclosed volume increases the velocity of the air in contact with the DUT. High velocity increases heat

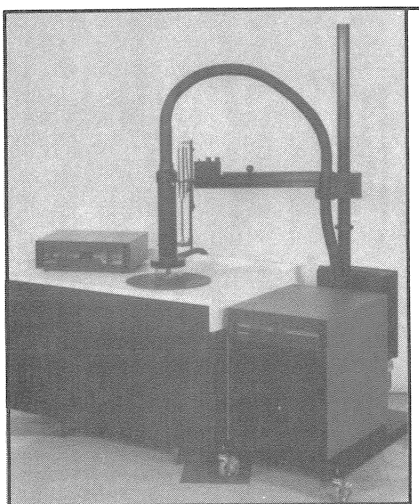

Figure 1. Temptronic TP0412A ThermoStream System.

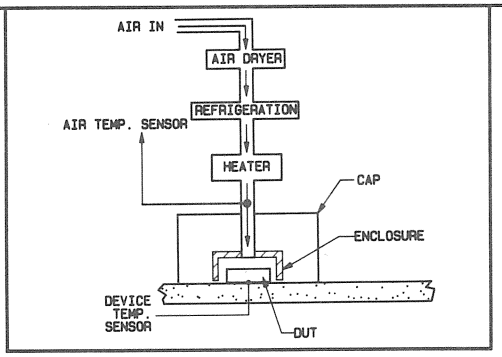

Figure 2. Airstream/DUT Block Diagram.

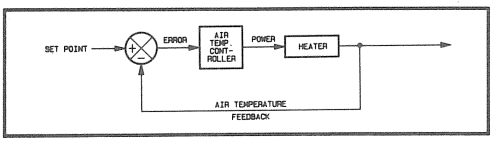

Figure 3. Airstream Control System.

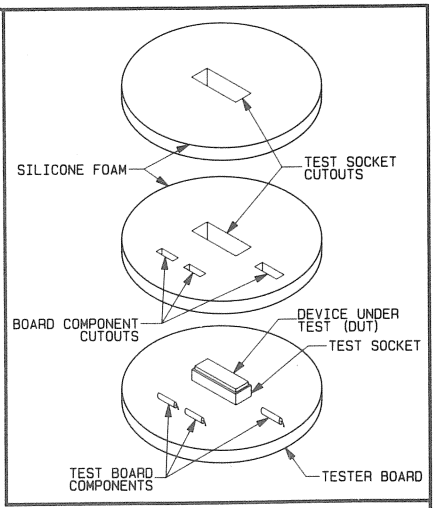

Figure 4. Thermal Insulation of Test Socket.

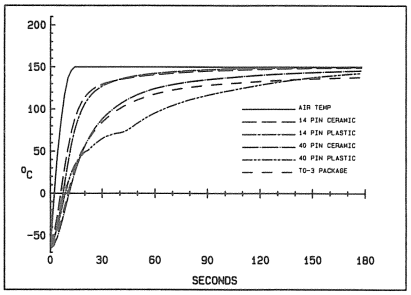

Figure 5. Temperature Transition −65°C to 150°C, Air Flow 8 scfm.

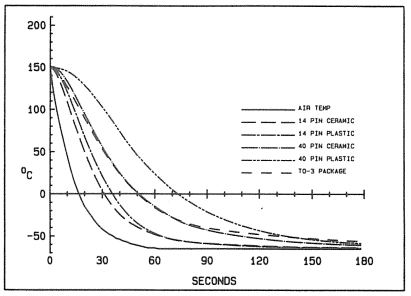

Figure 6. Temperature Transition 150°C to −65°C, Air Flow 8 scfm.

transfer. Insulation of DUT test sockets to minimize thermal leakage paths (**Figure 4**) also improves coupling.

The data presented in **Figure 5** and **Figure 6** illustrate typical airstream performance for the case when both the airstream and the DUT start from the same temperature and approach a set value. They were obtained using a cap, enclosure and insulated test sockets. The various devices exhibit different transition times and offsets from the airstream temperature. In general, small devices respond rapidly and have small offsets. Large devices respond more slowly and have larger offsets. The test fixture mass is significant in all cases as can be seen in the curve for a 40-pin plastic device (**Figure 5**) where discontinuities are due to heat transfer between the device and its test socket. Higher air flow would reduce both transition times and final offsets.

Accurate device temperature measurement and good coupling between airstream and device will provide adequate performance in many applications. It is important to remember, however, that the test device is outside the temperature control loop and its temperature may differ from that of the airstream. If precise device temperature control or minimum transition time is required, then automatic control of device temperature is desirable.

Closing the Loop Around the DUT

The significant advantages are:

- The device achieves a desired temperature faster since air temperature is allowed to exceed the device setpoint.
- If an appropriate control system is used, offset between setpoint and device temperature can be virtually eliminated during steady state.
- Devices undergoing tests in which varying amounts of power are dissipated can be held at a steady temperature since the airstream temperature is allowed to change.

The design of an airstream system to permit DUT temperature control with the temperature sensor in contact with the device presents a problem to manufacturers of airstream systems. The device and its fixturing must be included in the control loop. Since the time constants and heat transfer characteristics of the user's application cannot be known in advance, control stability and performance can be a problem. The design of a controller for device control consists of two parts. First, the configuration of the control must be decided upon and then the parameters of the controller must be optimized for the application.

Single Loop Device Temperature Control

One possible configuration is a single loop system with the DUT in the control loop. It is easy to modify an airstream system by substituting a temperature sensor which is in contact with the DUT for the sensor in the airstream.

For accurate measurement of device temperature, the DUT sensor must be shielded from high velocity air. If the sensor is mounted on top of the device in the airstream, its output will be some weighted average of device and air temperatures. The usual practice with integrated circuits is to center a thermocouple on the bottom of the surface of the package, the area which is generally closest to the circuit die.

The controller senses the device temperature and regulates the power to the heater to bring the DUT temperature to a setpoint. Optimization of the system is difficult since the thermal characteristics of the DUT and fixturing are significantly different from those of the heater/airstream system that the controller was designed to regulate. If the sensor is shielded from the airstream in order to accurately measure DUT temperature, the system is difficult to stabilize and extremely sensitive to DUT thermal characteristics. When the system is unstable, the air temperature oscillates and may swing between the system limits. This may stress or damage the DUT. Instability can be detected by using two temperature meters, one for air temperature and the other for device temperature.

Dual Loop Device Temperature Control

A better approach is a dual loop system. The dual loop configuration adds a second control loop around the air system (**Figure 7**). The device temperature error signal controls the temperature setpoint of the air system. The output of the airstream system is used to change the device temperature. In this configuration, modification of the airstream system is not necessary; it remains optimized for air temperature control. The outer loop can be optimized to control DUT temperature.

This allows the system to be used in a wide variety of applications with little readjustment of control parameters. With the airstream system intact, upper and lower air temperature limits can be set to protect devices from excessive temperature exposure under any conditions. Even if the device temperature sensor is improperly placed, creating an instability in the device control loop, the inner loop will control the air temperature. With the dual loop approach, the basic air system control is not modified and the airstream system is not exposed to unexpected open loop conditions which lead to uncontrolled temperature excursions.

To demonstrate the dual loop approach, a control system was imple-

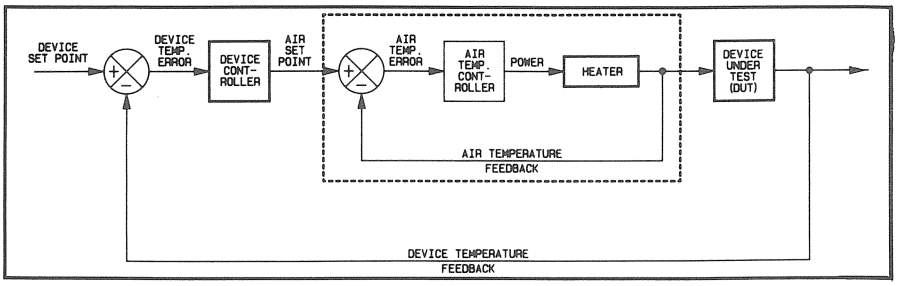

Figure 7. Dual Loop Device Control System.

mented with unmodified commercially available equipment. A Temptronic Corporation TP0412 ThermoStream System with IEEE 488 option (Figure 1) was used. This system is designed to deliver 2 to 10 scfm of air at temperatures ranging from −70° to +200°C. The IEEE 488 option allows an external controller to vary the air setpoint and to read both air temperature and system status. A thermocouple was used to measure the bottom temperature of the DUT. The controller for the outer loop was a Hewlett-Packard HP 85 Personal Computer with HPIB (IEEE 488). Device temperature was measured with a Hewlett-Packard Model 3421A Data Acquisition/Control Unit with Option 20 and HPIB. DUT temperature was measured by the 3421A Unit and transferred to the HP 85 over the HPIB.

The HP 85 calculated setpoints and transferred them to the TP0412 system via IEEE 488. The controller program for the HP 85 **(Figure 8)** implements the following control algorithm:

$$Asp = Dsp + K1\,e + K2 \int e\,dt$$

where:

Asp = Air setpoint
Dsp = Device setpoint
e = Error (Device setpoint − Device Temperature)
K1 = Proportional constant
K2 = Integral constant

Line numbers 530 and 532 of Figure 8 are limits on the air setpoint. These can be set to whatever values are necessary to protect the DUT. Lines 526 and 527 limit the value of the integral term of the control equation to ±10° to reduce the integration effect during transients. The integration will maintain a steady offset between air and device temperature of up to 10°. The control subroutine executes every two seconds.

Some results of a test on a 14-pin plastic package are shown in **Figure 9**. Initially, both the air and the device were at −65 degrees Celsius. The device setpoint was raised to +150°. The control program raised the air setpoint to the upper limit of 200°, the air temperature rose to 200° and then decreased as the device error decreased. At 90 seconds the device setpoint was changed to 25° and similar control action was observed. Referring to Figure 5 it can be seen that without a device control system a 14-pin plastic package took more than 100 seconds to approach within one degree of the 150° air temperature. In the dual loop setup it took only 50 seconds to come to temperature. Typical steady state accuracy of the test system was ±.4° Celsius. Device temperature overshoot was usually less than 2°. This system demonstrates the significant reduction in device temperature transition time that can be obtained by using a device control loop.

```
100 !       DEVICE TEMPERATURE CONTROLLER
110 !
120 K1=.5 @ K2=.5 !                    Control Constants
121 I=0 @ F=1
122 INPUT S !                           Get Device Setpoint
140 REMOTE 9 !                          Remote IEEE Bus
150 OUTPUT 901 ; "TEM3" !               Initialize Data Acq Sys
170 ON TIMER# 1,2000 GOSUB 500 !        Interrupt Every 2 Sec
180 !
200 IF F=1 THEN 200 !                   Wait Until Data Available
205 DISP D @ F=1 !                      Display Dev Temp
210 GOTO 200
400 !
500 !       INTERRUPT SERVICE ROUTINE
510 !
515 F=0
520 ENTER 901 ; D !                     Read Dev Temp
522 E=S-D !                             Calculate Error
523 P=K1*E !                            Proportional Term
524 I=I+K2*E !                          Integral Term Accumulates
526 IF I>10 THEN I=10 !                 Saturation Limits On I
527 IF I<-10 THEN I=-10
528 A=S+P+I !                           Calculate New Air Setpoint
530 IF A>200 THEN A=200 !               But Not Beyond Limits
532 IF A<-70 THEN A=-70
540 OUTPUT 902 ; "RS"; INT(A+.5) !      Send A To Airstream, Rounded
550 TRIGGER 901 !                       Trigger Next Reading
560 RETURN !                            From Interrupt
999 END
```

Figure 8. Dual Loop Control Program.

An optimized dual loop control system has been implemented in the Temptronic Corporation Device Under Test Control option for the TP0412 system. The TP0412 system microprocessor allows the use of a more sophisticated control algorithm than was presented above. It controls device temperature without an external computer and temperature measuring system. The option is a small remote console which includes device temperature indication, air or device control selection and either 1 or 5 setpoint selections. The console is designed to allow these controls to be conveniently located near the test socket. If desired, the option can be controlled and device temperature and status read by using the TP0412 IEEE 488 option.

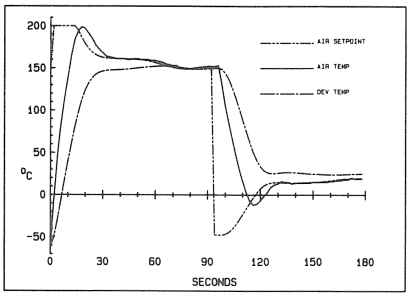

Figure 9. Thermal Step Response of the Dual Loop DUT Control System.

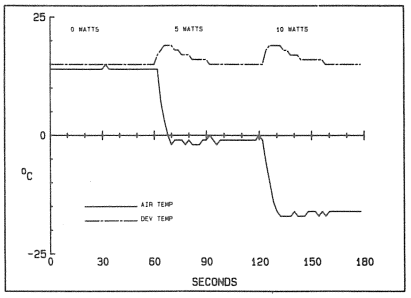

Figure 10. Device Controlled Power Dissipation Compensation.

Using Dual Loop Control for Compensating for Variable Power Dissipation

As an illustration of the utility of the DUT control option, a test was performed on a 5 volt regulator integrated circuit in a TO-3 package. The device, under DUT control by the TP0412 system, was held at +15°C in an air flow of 10 scfm (5 l/s) while the power dissipation of the device was changed from 0 watt during the first 60 seconds, to 5 watts during the second 60 seconds and to 10 watts during the final sixty seconds of the test.

Figure 10 shows how the air temperature responded to the step change in device dissipation maintaining the device at the 15°C setpoint. The device temperature was raised 4° by the change in power but was within 2° of setpoint after 18 seconds and restabilized at the setpoint in 30 seconds. Figures 5 and 6 show the TO-3 package to have the largest offset from air temperature of the devices tested. The device control system eliminates the offset even when the device is dissipating considerable power. The steady state accuracy of the DUT option is typically less than ±.2°C.

A dual loop device control system greatly enhances the ability of airstream systems to precisely control the temperature of devices under test and minimize transition times from one test temperature to another. If high throughput or accurate device temperature is required, this system provides the required performance. EE

GEORGE EAGER is a Senior Electronics Engineer at Temptronic Corp. where he is responsible for all electronic product development and has been with the company for 12 years.

PETER SELVERSTONE is a consultant specializing in microprocessor control of mechanical systems.

B-10.2 TEMPERATURE SENSORS

As illustrated in Appendix C-4 proper contact is essential to reliable temperature sensing. When the sensor is used in a control circuit, as in this case, the sensor must be properly constructed, positioned for maximum contact and isolated from other components to minimize response times.

Two (2) different ("spring", "disc") thermocouple assemblies are supplied, allowing the user to determine which is best for his application.

A representative performance curve is provided on page B-10.6 to illustrate the results using both type sensors with a TP0412A ThermoStream® system operating in the DUT mode. The response of the "disc" is more responsive than the "spring" and should be used if test speed and through-put are the most important needs. The "spring" type sensor is more rugged and if its response is adequate for the application, may be a better choice.

REPRESENTATIVE PERFORMANCE DATA

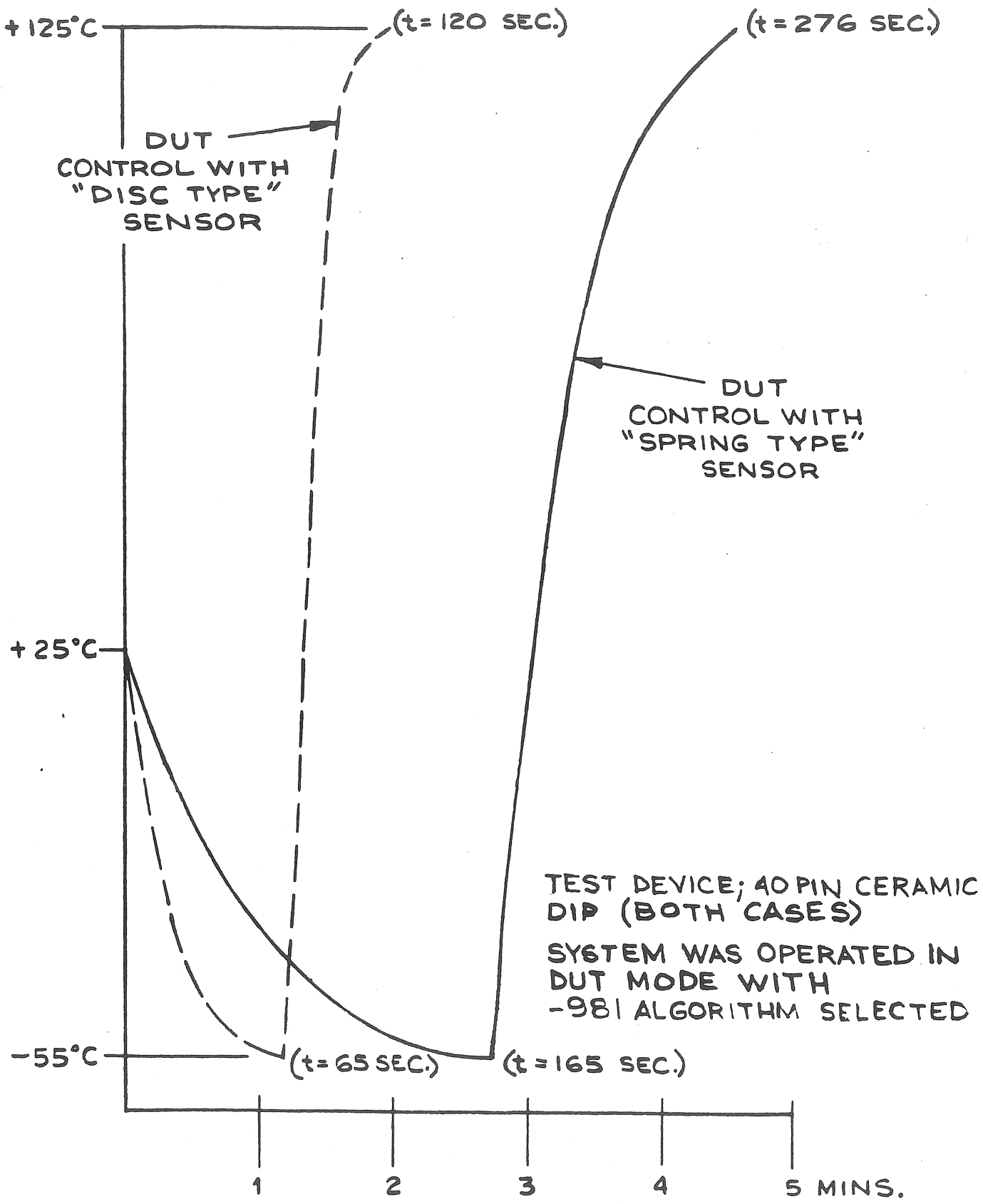

B-10.3 INSTALLATION

1. Remove the temperature controller from its cabinet and remove the top cover screen.

2. Referring to Figure B-10.2, disconnect the ribbon cable from PCB connector J2 and remove the TEMPERATURE SET SELECT switch and its short ribbon cable from the the controller front panel.

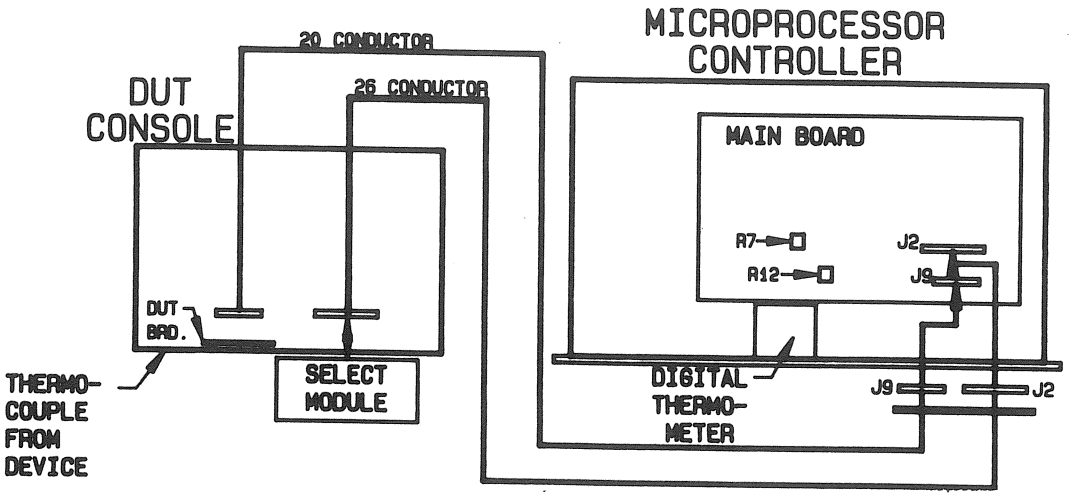

Figure B-10.2. DUT Console & Microprocessor Controller Interconnections.

3. Disconnect the short ribbon cable from the TEMPERATURE SET SELECT switch and store it for possible future use.

4. Thread both DUT CONTROL OPTION ribbon cable through the front panel opening and connect them to connectors J2 and J9 on the controller PCB. If present, make ground lead (2) connection to microprocessor chassis grounding stud.

5. Attach the front panel cable strain relief plate in the controller front panel.

6. Connect the 26 conductor ribbon cable inside the DUT OPTION CONSOLE to the TEMPERATURE SET SELECT switch and mount this switch module in the DUT CONSOLE front panel.

7. Refer to Section 5-3.4 for calibration instructions. If calibration is not necessary at this time replace the controller top cover screen and reinstall the controller in its cabinet.

8. If not already done prepare the test site as outlined in Section B-10.4.

B-10.4 FIXTURING (preparing the test site)

The following is offered as a guide to proper fixturing. If the supplied temperature sensors are to be used refer to the appropriate section (B-10.4.1 "spring", B-10.4.2 "disc") for installation instructions.

IMPORTANT: TIME/TEMPERATURE RESPONSE is dependent on the mass being heated or cooled, quality of sensor to DUT contact, materials of the fixture as well as interface of the TP0412 ThermoStream® System to the test fixture. Close attention to fixturing details will ensure best DUT performance.

1. All materials used in fixturing should be capable of withstanding the total system specified temperature range of -70°Celsius to +205°Celsius.

2. Proper socket and thermocouple assembly will allow only the thermocouple junction to contact the bottom center of the DUT to minimize heat sinking. The tested device body should not contact the socket body (see drawing B4714).

3. Use a small gauge (#26, #28 or #30 gauge) teflon or kapton coated copper-constantan (type T) thermocouple wire.

4. Make thermocouple junction as small as possible. Mount thermocouple to socket per concepts shown by drawings B4322 and B4714.

5. Use silicon rubber as an insulated base on which socket is to be mounted, see Figure B-10.3. Make base large enough to accommodate Thermal Cap for proper sealing. Reference Appendix C-2 of the manual.

6. Center and mount socket on silicon base.

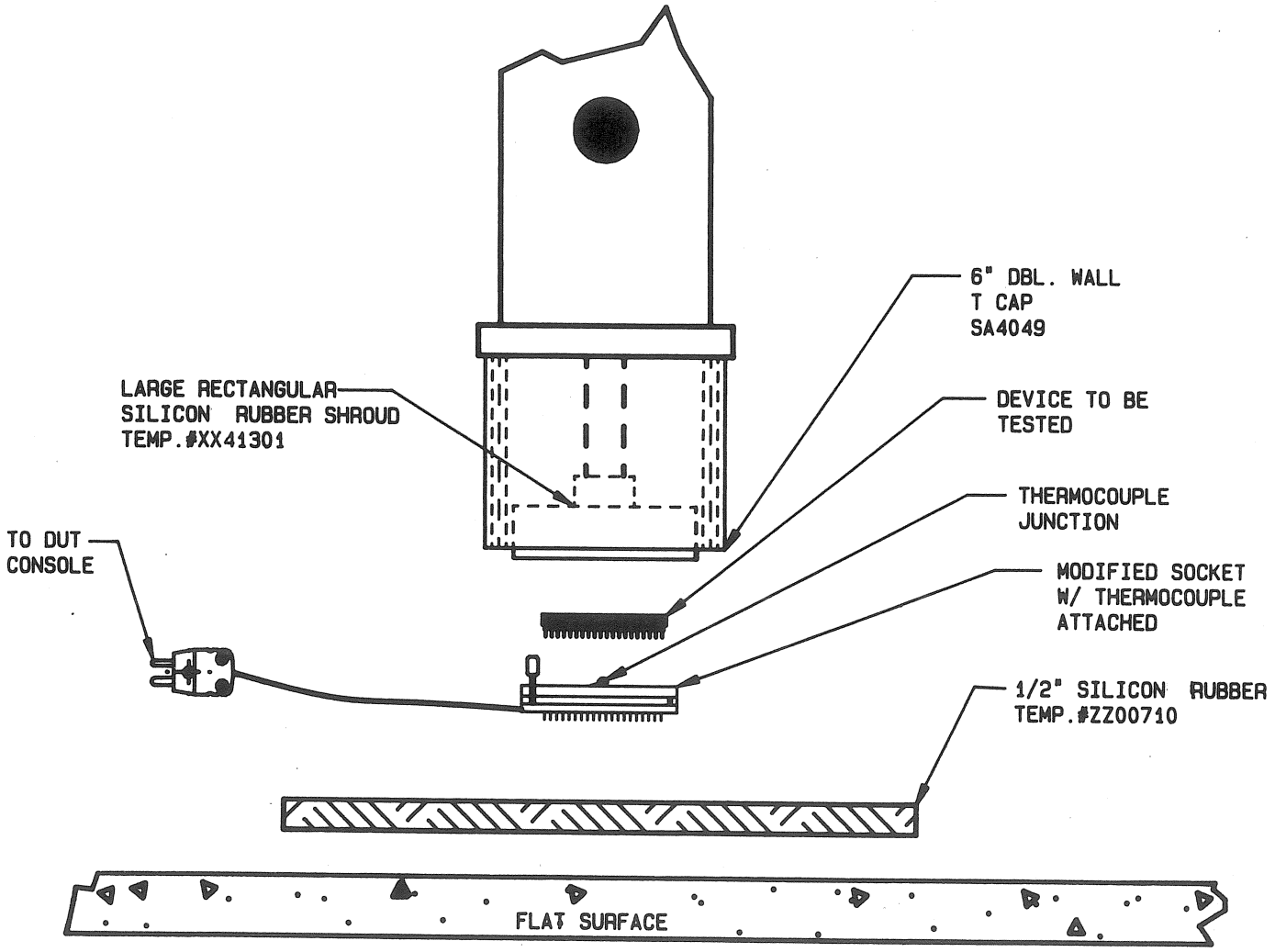

Figure B-10.3. DUT Test Fixture and Interface.

TEMPTRONIC APPLICATIONS personnel are available to assist with any specific or special fixturing inquiries.

REVISIONS				
ZONE	LTR	DESCRIPTION	DATE	APPROVED
	A	RELEASED	12-4-84	Jim C
	B	ECN# 2974	3/86	[illegible]

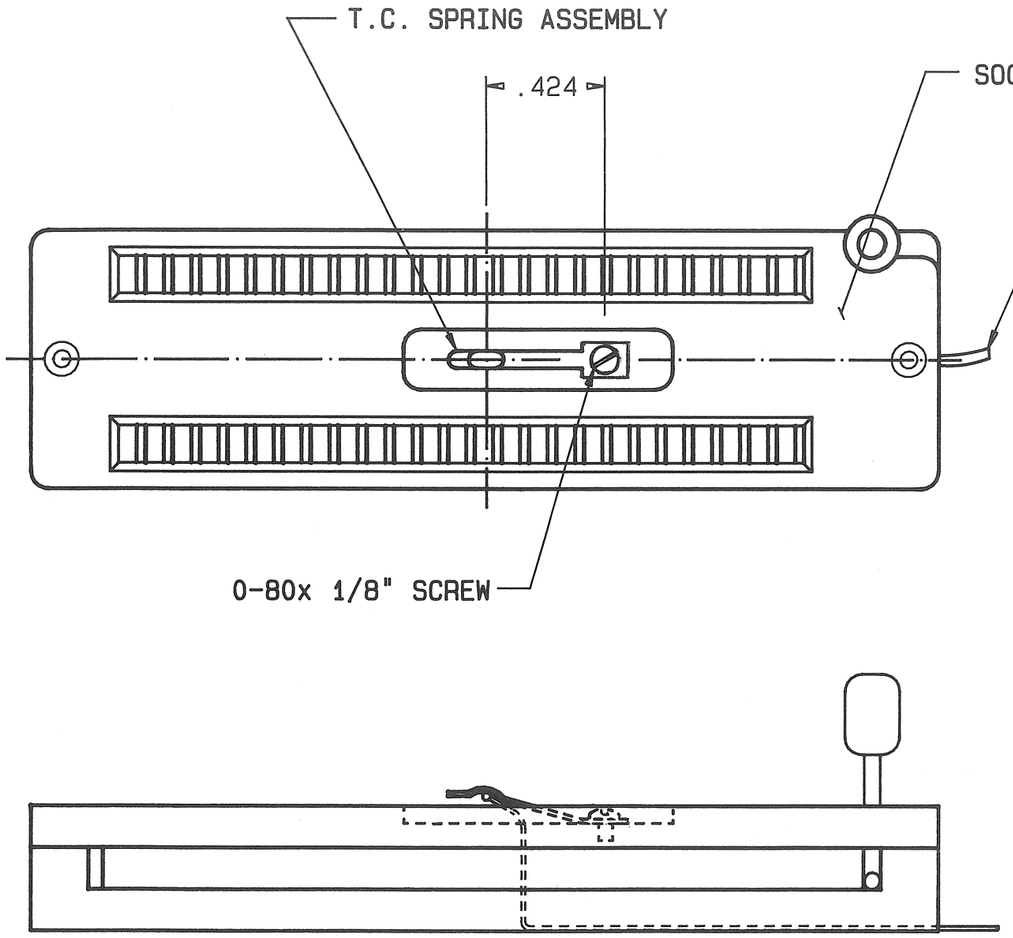

SOCKET MODIFICATION

1- MILL A .12" WIDE x .06" DP. SLOT IN SOCKET TO POSITION THERMOCOUPLE JUNCTION AT THE CENTER OF THE "DUT"

2- DRILL & TAP FOR THE #0-80 MNTG. SCREW TO SECURE THE THERMOCOUPLE SPRING ASSEMBLY IN PLACE.

3- OBSERVE THERMOCOUPLE POLARITY WHEN AND IF REMOVING THERMOCOUPLE CONNECTOR FOR PROPER RE-INSTALLATION.

4- CONVENIENTLY ROUTE THE THERMOCOUPLE WIRE FROM SOCKET. CARE SHOULD BE TAKEN TO PREVENT ANY UNDO STRESS. THE ILLUSTRATION INDICATES ONE POSSIBILTY.

5- MOUNT THERMOCOUPLE SPRING ASSEMBLY IN SLOT USING HARDWARE PROVIDED.

NEXT ASSY	USED ON	SYSTEM
Appendix B-10	LMB1190	TP0412A
ZAK 4327		TP0412

APPLICATION

UNLESS OTHERWISE SPECIFIED DIMENSIONS ARE IN INCHES TOLERANCES ARE:
FRACTIONS ± 1/64 DECIMALS .XX ± .015 .XXX ± .005 ANGLES ± 30'

MATERIAL: SEE P/L

FINISH

DO NOT SCALE DRAWING

CONTRACT NO.

APPROVALS	DATE
DRAWN LDR	12-3-84
CHECKED	
ENG Jim	12-4-84

UNLESS OTHERWISE SPECIFIED RESISTANCE VALUES ARE IN OHMS ± % WATT
CAPACITANCE VALUES ARE IN ± % VOLTS

TEMPTRONIC CORP.

TYPICAL TEST
SOCKET MODIFICATION
(SPRING TYPE)

SIZE	CODE IDENT NO.	DRAWING NO.	REV
B		4322	B

SCALE NA SHEET 1 OF 1

B-10.10

REVISIONS				
ZONE	LTR	DESCRIPTION	DATE	APPROVED
	A	RELEASED ECN 2976	3/86	MJP

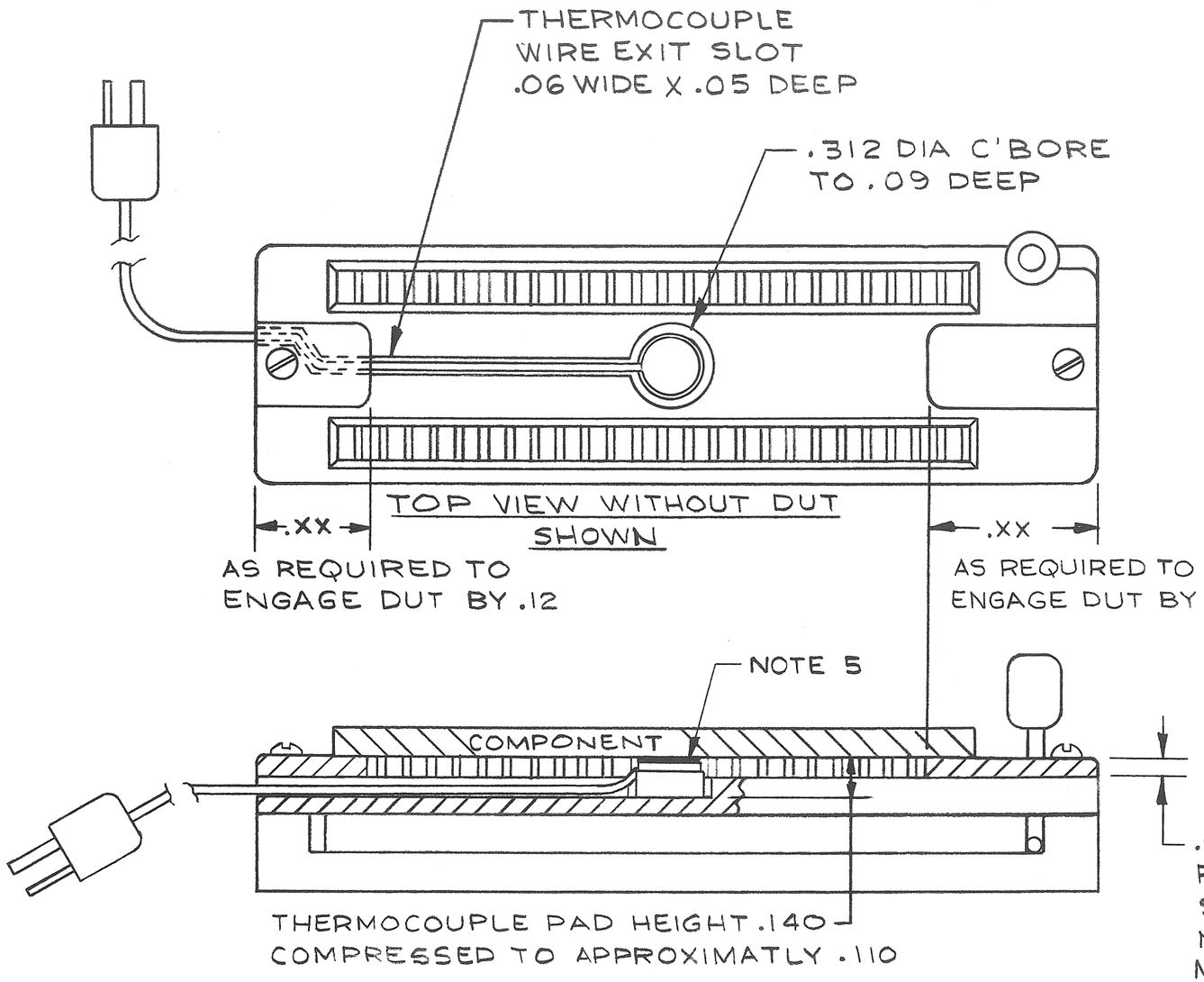

SOCKET MODIFICATION

1. OBSERVE THERMOCOUPLE POLARITY WHEN AND IF REMOVING PLUG FOR PROPER INSTALLATION.
2. CONVENIENTLY ROUTE THE THERMOCOUPLE WIRE FROM SOCKET. CARE SHOULD BE TAKEN TO PREVENT ANY STRESS IN THERMOCOUPLE WIRES.
3. DIMENSIONS SHOWN, SUGGEST A METHOD OF MODIFYING A TEXTOOL SOCKET #248-4775. IF OTHER SOCKETS ARE USED DIMENSIONS AND METHOD OF ATTACHING THERMOCOUPLE MAY REQUIRE MODIFICATION TO ACHIEVE .02 MIN. CLEARANCE DIMENSION SHOWN. WHILE APPROXIMATLY COMPRESSING DISC .03.
4. ANY ADHESIVES USED, SHOULD BE RATED TO WORK AT MAXIMUM TESTING TEMPERATURE.
5. A THIN LAYER OF THERMAL GREASE IS RECOMMENDED BETWEEN DISC AND COMPONENT.

LMS1170	DUT	TP0412A
NEXT ASSY	USED ON	SYSTEM
APPLICATION		

UNLESS OTHERWISE SPECIFIED DIMENSIONS ARE IN INCHES
TOLERANCES ARE:
FRACTIONS DECIMALS ANGLES
± 1/64 .XX ± .015 ± 30'
.XXX ± .005

MATERIAL —

FINISH —

DO NOT SCALE DRAWING

CONTRACT NO.

APPROVALS	DATE
DRAWN ESPINOLA	2-25-86
CHECKED MJP	3-4-86
ENG	

UNLESS OTHERWISE SPECIFIED RESISTANCE VALUES ARE IN OHMS ± % WATT
CAPACITANCE VALUES ARE IN ± % VOLTS

TEMPTRONIC CORP.

TYPICAL TEST SOCKET MODIFICATION (DISC TYPE)

SIZE	CODE IDENT NO.	DRAWING NO.	REV
B		4714	A

SCALE NA SHEET 1 OF 1

B-10.11

B-10.4.1 "Spring" Type

The "spring" sensor kit (P/N ZAK 4327) is supplied as a complete assembly. The user must modify the socket per drawing B4322 to accommodate this assembly. This assembly consists of a berillium spring and 18" of #30 gauge type "T" thermocouple wire with the proper male connector.

B-10.4.2 "Disc" Type

The "disc" sensor kit (P/N ZAK 4713) is supplied as a thermocouple assembly with 6 replacable silicon disks. Refer to drawing B4714 for proper installation of this sensor into a typical socket.

The use of a thermally conductive compound (very thin layer) may be added to the sensor contact surface to maximize thermal response.

B-10.5 DUT CONSOLE FEATURES

Item	Designation	Function	Explanation
1	TEMPERATURE meter	Indicates the temperature of the device under test in °C.	Provides a 3 digit and polarity display of the temperature with a 1°C. resolution and also supplies the displayed temperature to the temperature controller
2	MODE select switch	Is used to select temperature control of the air or the DUT	A momentary action push button switch.
3	SYSTEM TEMPERATURE control indicator	Indicates that the air temperature sensor is being brought to the temperature set set point.	When lighted the temperature controller is controlling the air temperature using a TC in the air stream.
4	DUT TEMPERATURE control indicator	Indicates that the DUT temperature sensor is being brought to the temperature set point.	When lighted the temperature controller is controlling the DUT temperature using a TC in good thermal contact with the bottom of the device under test. The TC must not be grounded.
5	THERMOCOUPLE connector	Provides the input connection for the temperature signal from the TC which senses the DUT temperature.	Allow the DUT TC to provide a temperature signal to the DUT TEMPERATURE METER and to the temperature controller.

B-10.6 DUT CALIBRATION

When the DUT option is supplied with the TP0412A ThermoStream^{R} system all necessary calibration has been performed. If this option was purchased separately, the temperature meter has already been calibrated per the procedure in Section 5-3.1 the user must however calibrate the microprocessor control circuit (Secion 5-3.4) during installation.

B-10.7 OPERATION

The DUT option permits an input to the microprocessor from an external sensor, a small gauge type "T" thermocouple, in contact with (usually the bottom) the DUT. This can be accomplished by applying the techniques outlined in Section B-10.4. This thermocouple is plugged into the receptacle provided on the DUT console front panel.

When using the DUT option, the operator selects either "SYSTEM" temperature control or "DUT" temperature control with the MODE switch on the DUT console front panel. If the IEEE-488 option is installed this selection can be done over the bus. When the "SYSTEM" indicator is lit the system is using the thermocouple in the air stream as the sense input and when the "DUT" indicator is lit the thermocouple in contact with the device is the sense input. When in DUT mode the microprocessor still monitors the supplied air temperature to ensure it is not beyond either the system specified or user pre-programmed limits.

The microprocessor has been pre-programmed with four (4) different control constants to accommodate the typical mass and materials of most common devices. Each constant has been assigned an access code which can be selected either through the front panel (Section 3-8.1) controls or over the bus (Section B-8.4) if the IEEE-488 option is installed. Upon power up the system defaults to -980. These constants will only be effective when the system is operating under DUT control.

For devices other than those shown select the constant which closely approximates the device to be tested and make some response measurements then repeat the measurements using the other constants to find the optimum condition.

Refer to Section 3-8 for "Additional Microprocessor Functions" which permit setting other operating parameters such as soak times and air temperature limits.

APPENDIX C
APPLICATION NOTES

This Section provides procedures and techniques which have proven useful in the utilization of ThermoStream® Systems. By becoming familiar with this information and adhereing to the principles presented maximum system performance will be ensured as will user satisfaction.

A separate section for each note, see list below, is provided here.

Appendix	Note
C-1	Physical Principles of ThermoStream® Systems
C-2	ThermoStream® Interfacing Techniques
C-3	Minimizing DUT Temperature Stabilization Times
C-4	Test Specimen Temperature Measurement
C-5	Miniature Thermocouples for Surface Temperatures
C-6	ThermoStream® Mini-Chamber Application Note

APPENDIX C-1
PHYSICAL PRICIPLES OF THERMOSTREAM® SYSTEMS

C-1.1 INTRODUCTION

Temptronic ThermoStream® systems are precision tools. As is the case with all precision tools, they can be used to maximum benefit only if certain fundamental physical principles concerning their operation are fully considered by the user.

Following, is a brief discussion concerning the important physical principles as they relate to ThermoStream® usage.

C-1.2 TEMPERATURE CONTROL

Temptronic ThermoStream® systems provide temperature controlled gas, which can be conveniently used to provide test ambients at specific temperatures. It is important to remember, that the test specimen is outside the ThermoStream® temperature control loop and its temperature is controlled only secondarily by the ThermoStream® air.

C-1.3 HEAT TRANSFER

A ThermoStream® transfers heat to and from a test specimen by forced air convection. Heat transfer requires time; thus test specimen temperature changes will always lag ThermoStream® air temperature changes, as is illustrated graphically in Figure C-1.1.

Various test system variables affect the test specimen stabilization temperature and the time required to reach this stabilization temperature. The most significant of these variables are:

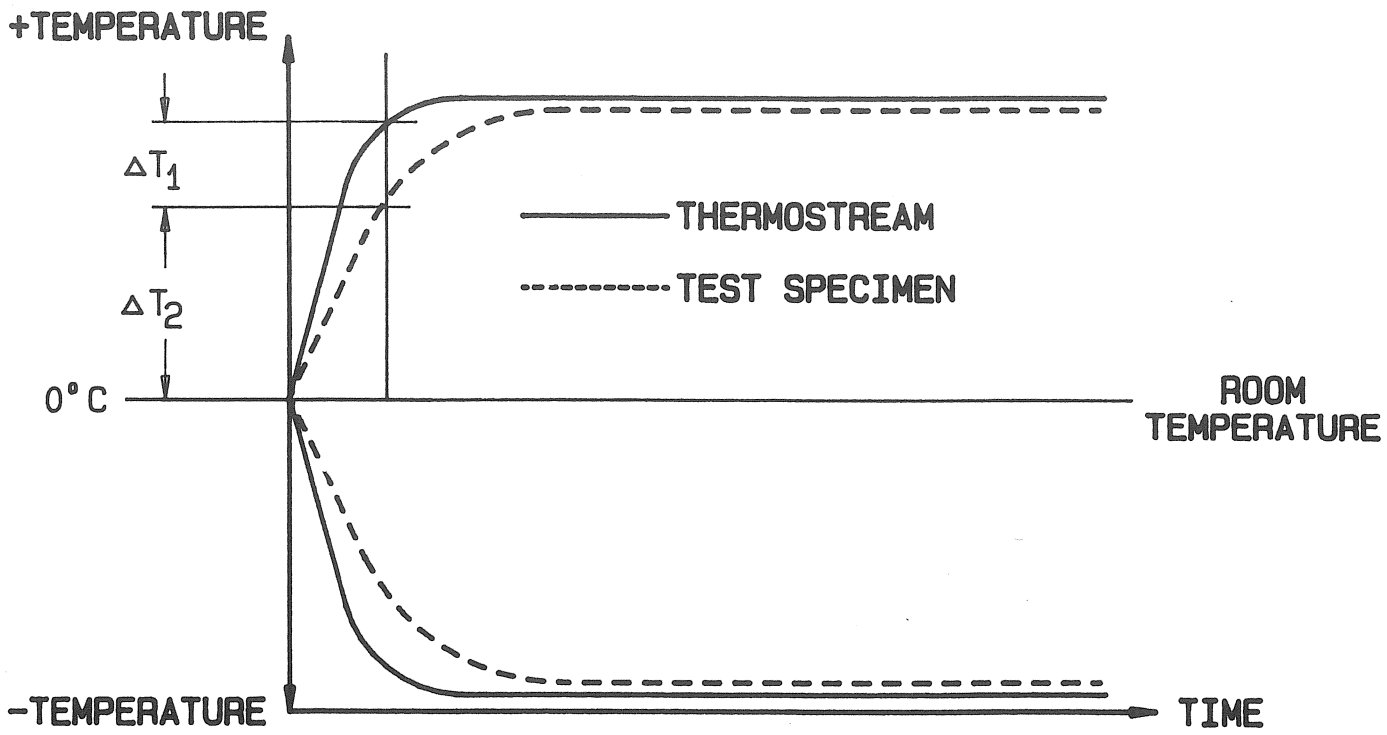

Figure C-1.1. ThermoStream^{R} air temperature and DUT temperature vs time.

1. The temperature difference between the ThermoStream^{R} air and the test specimen, continually changes until the test specimen reaches a stabilization temperature.

The greater the value of Delta T_1, the greater will be the forced convective heat transfer rate and the shorter will be the time for the test specimen to reach a stabilization temperature. Thus, when Delta T_1 is large, the test specimen temperature will change more rapidly than when Delta T_1 is small.

2. The temperature difference between the test specimen and the room ambient temperature Delta T_2, continually increases until the test specimen reaches a stabilization temperature. The greater the value of Delta T_2, the greater will be the heat transfer losses to or from the test specimen and the longer the time will be to reach stabilization.

3. The largest heat transfer loss from the test specimen is via thermal conduction from the test specimen through its mounting to the room ambient temperature zone. This can be minimized through selection of low thermal condutivity materials, long thermal conduction paths, and small thermal conduction path areas.

4. The greater the mass in the test zone, the longer will be the time necessary to change its temperature between two limits. Though the test specimen mass is normally fixed, the masses of fixturing in the test zone may be designed to minimize mass.

5. The greater the specific heat of the mass in the test zone, the longer the time will be to change its temperature between two limits. Specific heats of any fixturing in the test zone, may be minimized through careful selection of low specific heat materials.

6. The better the thermal coupling between the temperature controlled air and the test specimen, the shorter will be the time required to change the test specimen temperature between two limits and the smaller the temperature difference will be between the test specimen and the air stream at temperature stabilization. In general, thermal coupling is maximized through fixturing which permits the maximum percentage of temperature controlled air to impinge on the test sample rather than being wasted in transferring heat to or from masses that do not require temmperature control.

C-1.4 HIGH AND LOW TEMPERATURE CONSIDERATIONS

In using a ThermoStream^{R} to achieve temperatures in test specimens, the user must have fixturing which will limit high and low temperatures to a well-defined test zone so that temperature-sensitive parts of the remainder of the test setup are not damaged. This can be accomplished through fixture design, incorporating long thermal paths through small areas of low thermal conductivity materials and by baffling to limit the high and low temperature air to only the test zone.

C-1.5 DEW POINT CONSIDERATIONS

In addition to the temperature considerations of the previous paragraphs, the user must apply a ThermoStream^{R} in a manner which will prevent or minimize condensation of moisture. Within the test zone, the air has a moisture content with a dew point below the temperature capability of a ThermoStream^{R} and no condensation will occur. Outside the test zone, however, condensation will occur if the temperature is below the dew point temperature of the ambient air. Where condensation can damage other parts of the test system, it must be minimized by 1) limiting times at low temperatures so that a damaging amount of condensation does not have sufficient time to form, or 2) by maintaining temperatures above the dew point by limiting thermal conduction (see paragraph C-1.4 and/or 3) by heating the subject areas.

APPENDIX C-2
THERMOSTREAM® INTERFACING TECHNIQUES

C-2.1 UTILIZATION OF SILICONE FOAM INSULATION KIT

A general problem encountered in the testing of components at both reduced and elevated temperatures, is that of preventing the heat transfer from the device under test within the chamber to the external test equipment. Since thermal conductivity is the mode of appreciable heat transfer, it is obvious that the use of materials which have low thermal conductivity is desirable.

Another form of heat transfer that must be considered, is that by forced convection, which occurs as a result of the gas flow turbulence inside the test chamber. Undesired heat transfer by forced convection can be minimized by sealing any gas leakage paths within the tester interface.

Silicone foam in sheet form combines the property of low thermal conductivity with the added features of elasticity and the ease with which it can be cut to fit snugly around a given component configuration, thereby forming a seal to minimize heat transfer due to forced convection.

An insulation kit, part number ZAK40480, is supplied with each ThermoStream® System. This kit is comprised of three sheets of silicone foam material (12" X 12" X 1/8", 12" X 12" X ¼", and 12" X 12" X ½") and a tube of RTV adhesive. Proper application of this material, offers the user a simple and economical solution to the thermal interface problems created by the wide range of environment induced around the test site. A typical interface using the silicone foam insulation kit, is shown in Figure C-2.1.

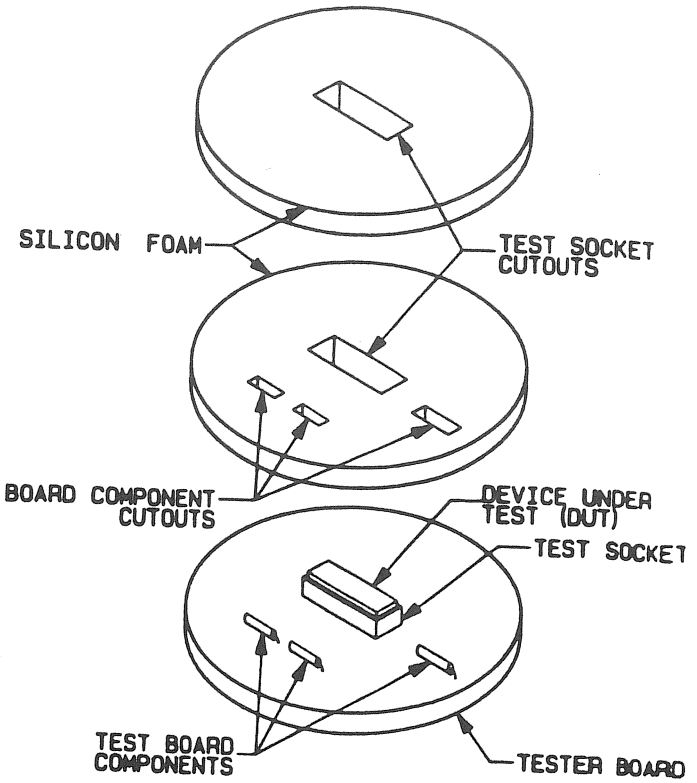

Figure C-2.1. Typical foam/board assembly.

C-2.2 ADDITIONAL INTERFACING TECHNIQUES

Low temperature testing presents the additional problem of possible condensation and/or icing at the tester interface. As a result of the low dew point (less than -80°C.) of the supply gas, condensation within the test chamber is not a problem. However, thermal conduction and forced convection may cause condensation to appear on the cables and/or interconnecting devices to the test equipment, which are normally located in a room environment having dew points on the order of 15°C. For those test procedures that require abbreviated soak times at reduced

temperatures, condensation is minimal or nonexistent. However, long-term testing at reduced temperatures, may require that additional precautionary measures be taken to prevent condensation, especially where the measurements of low-level voltages and currents are involved. Such precautions may simply require the use of additional foam insulation or, in extreme cases, require that the area exhibiting condensation be flushed with room air or dry gas (e.g. nitrogen) as shown in Drawing B4197 (Page C-2.5).

There is no universal solution to the thermal problems that may occur as a result of the variations in component geometry, the temperature range, and the soak times required for a specific test. However, the readily available and comparatively low cost silicone foam and RTV adhesive, offer the user an effective interface solution to the majority of thermal problems. The user is encouraged to make use of the insulation kit to provide an economical alternative to that of an expensive dedicated interface. In the case of a specific application where the temperature range and soak time are defined, the Temptronic Corporation engineering staff would welcome the opportunity to assist the user in the design of a custom interface.

AT TEST TEMPERATURES BELOW ROOM AMBIENT

1- DUT & TEST SOCKET MUST BE MOISTURE PROTECTED BY USING THE THERMOCAP TO SILICON RUBBER SEAL.

2- BEST MIOSTURE PROTECTION OF TESTER ELECTRONICS CAN BE ACHIEVED BY A STAND-OFF, FIBERGLASS PLATFORM, & WARMING A SHORT EXTENSION OF TEST SOCKET LEADS.

3- BY UTILIZING A THERMAL ENCLOSURE (SHROUD) TO CONFINE THE TEMPERATURE CONTROLLED AIR WITHIN THE AREA AROUND THE DUT & SOCKET, YOU WILL ACHIEVE HEAT TRANSFER, FROM AIRSTREAM TO DUT.

NOTE: TEST TIME FACTORS DEPEND ON MASS, SPECIFIC HEAT CHARACTERISTICS, THE THERMAL COUPLING & THERMAL CONDUCTION PATHS TO THE DUT, DETERMINED BY IT'S FIXTURING.

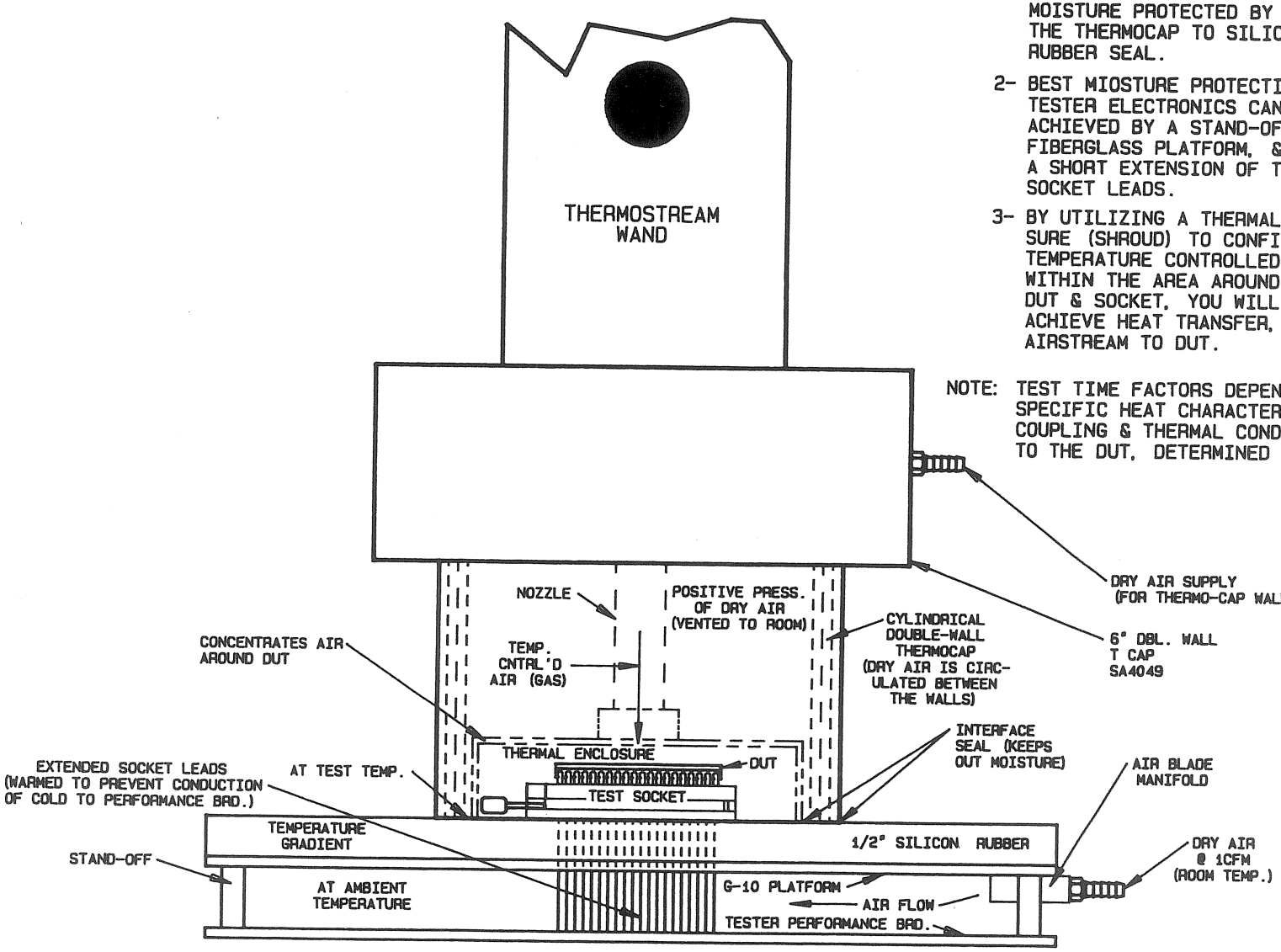

REVISIONS				
ZONE	LTR	DESCRIPTION	DATE	APPROVED
	B	REVISED PER ECN 2467	7.12.84	Dana

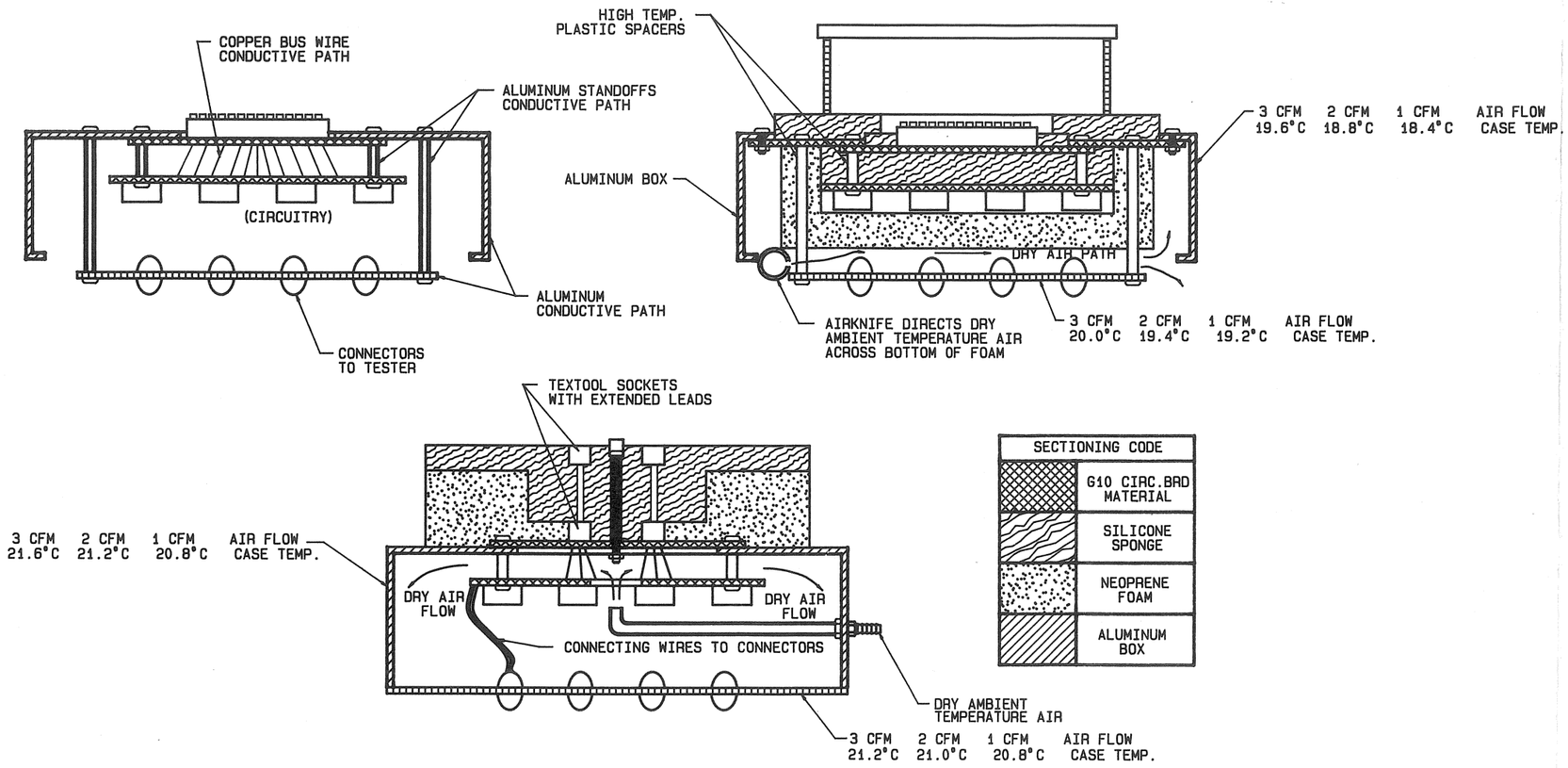

NEXT ASSY	USED ON	SYSTEM
Appendix C-2	LM51130	TP0412P

APPLICATION

UNLESS OTHERWISE SPECIFIED DIMENSIONS ARE IN INCHES TOLERANCES ARE:
FRACTIONS ± 1/64 DECIMALS .XX ± .015 .XXX ± .005 ANGLES ± 30'

MATERIAL

FINISH

DO NOT SCALE DRAWING

CONTRACT NO.

APPROVALS		DATE
DRAWN	B. DELPRETE	3-14-84
CHECKED		
ENG	Dana	7.12.84

UNLESS OTHERWISE SPECIFIED RESISTANCE VALUES ARE IN OHMS ± % WATT
CAPACITANCE VALUES ARE IN ± % VOLTS

TEMPTRONIC CORP.

"T" STREAM INTERFACE

SIZE	CODE IDENT NO.	DRAWING NO.	REV
B		4197	B

SCALE NA SHEET 1 OF 1

C-2.5

APPENDIX C-3
MINIMIZING TEST SPECIMEN TEMPERATURE STABILIZATION TIMES

This Appendix outlines techniques that have proven helpful in shortening the time necessary to bring a test specimen to a stable test temperature and thus, to increase the testing throughput. All the techniques discussed, are applications of the physical principles discussed in Appendix C-1.

The following discussion includes both an explanation of each technique and ThermoStream® test results of some of the techniques that illustrate the effect of applying each technique.

C-3.1 MINIMIZING THE TEST ZONE VOLUME

The glass ThermoCap supplied with a ThermoStream® System has a volume of approximately 40 cubic inches. Yet a typical test specimen, may have a substantially smaller volume. Normally, it is necessary to bring only the test specimen and the test fixturing to the test temperature. Thus, the provision of a small chamber which contains only these elements within the ThermoCap, will reduce the volume and mass which are brought to temperature and should substantially reduce the time required for the test specimen to reach a stabilized test temperature, and should also reduce the difference between the ThermoStream® air temperature and the test specimen stabilized test temperature.

To illustrate the validity of the above, a 40-pin ceramic DIP was tested. First using a TP450 system as manufactured and then repeating the test after enclosing the component and socket in a 1-inch x 5/8-inch x 2-3/4-inch plastic box. The bottom of the box was open to go over the component, and socket, and the ThermoStream® nozzle was projected through the top of the box. A thermocouple soldered to the bottom of the component was used to measure component temperature. The results are given in Table C-3.1

Table C-3.1. Results of tests using a reduced test zone volume.

Condition	Component Temperature Change	Thermo-Stream Air Temperature	Component Stabilization Temperature	Time in Seconds for Component to Reach Stabilization Temperature ±1°C
Without Inner Chamber	+25°C to -55°C +25°C to +125°C	- 59°C +129°C	- 55°C +125°C	186 202
With Inner Chamber	+25°C to -55°C +25°C to +125°C	- 56°C +126°C	- 55°C +125°C	100 80

C-3.2 USE OF TWO TEMPERATURE TEST SEQUENCE

The greater the difference between the ThermoStream® air temperature and the test specimen temperature, the higher the rate of heat transfer between the two. Also, the greater the rate of heat transfer, the faster the temperature of the test specimen will change.

Thus, when a ThermoStream® is used to change a test specimen temperature, a maximum rate of temperature change is achieved if the following sequence is followed:

1. Set the temperature controlled gas to a safe (to test specimen) temperature, beyond the control temperature desired.

2. Maintain the gas temperature set in step 1 until the test specimen reaches the control temperature.

3. Change the gas temperature to the temperature necessary to maintain the test specimen at the control temperature.

Using the test setup described in Section C-3.1 (with the inner chamber in place), the results given in Table C-3.2 were achieved and illustrate the "Two Temperature Test Sequence."

Table C-3.2. Results of Two Temperature Test Sequence.

Component Temperature Change	Step 1 Set Temperature	Step 2 Set Temperature	Time in Seconds for Component to Reach Stabilization Temperature ±1°C
+25°C to -55°C	- 65°C	- 56°C	92
+25°C to +125°C	+150°C	+126°C	50

It should be noted, that these results exhibit a further improvement over the results of Section C-3.1.

C-3.3 FIXTURE PRESOAK

When testing at temperatures above the ambient air dew point temperature, the time necessary to change the test specimen temperature to the test temperature, can be shortened, if the fixturing in the test zone is left at the test temperature rather than returned to room temperature after each test. In this mode of operation, only the test specimen temperature requires changing and thus, the temperature stabilization time can be shortened. Results of tests conducted in this manner are given in Table C-3.3.

Table C-3.3. Results of tests in which test fixturing remained at test temperature.

Component Temperature Change	Socket Temperature at Start of Test	Step 1 Set Temperature	Step 2 Set Temperature	Time in Seconds for Component to Reach Stabilization Temperature ±1°C
+25 to 125°C	+125°C	126°C	126°C	26
+25 to 125°C	+125°C	150°C	126°C	15

C-3.4 PRESOAK

When testing specimens at temperatures above the dew point temperature of the ambient air, large groups of specimens can be held near the test temperature in a temperature chamber and transferred singly to the ThermoStream® temperature controlled zone for testing at an accurate controlled test temperature. This will shorten the time necessary to bring the specimen to the test temperature.

NOTE

The modes of operation described in Sections C-3.3 and C-3.4, may be possible at some test temperatures below room temperature. However, condensation of moisture on the cold test fixture, may preclude these modes of operation, or it may limit their use to a small number of cycles. Users will have to determine by electrical test in their specific applications if these are viable operating modes.

APPENDIX C-4
TEST SPECIMEN TEMPERATURE MEASUREMENT

This appendix discusses techniques of attaching thermocouples to test specimen cases. Proper thermocouple attachment is necessary for accurate temperature measurements, which in turn, are necessary to determine test specimen temperature stabilization times (see Appendix C-3).

When mating test specimen thermocouples, do not use thermocouple wire thicker than No. 36 gauge (0.005 inch/0.013 mm). Thicker wires will conduct excessive heat between the test specimen and the ambient, resulting in inaccurate temperature measurements. The following examples show methods for thermocouple attachment to solderable and nonsolderable test specimens.

Unsatisfactory

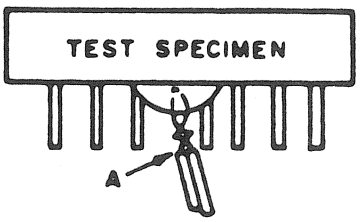

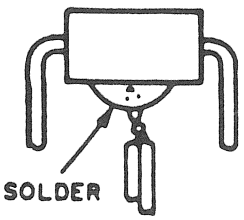

Measures temperature at "A" (Wires first join at "A")

Improvement No. 1

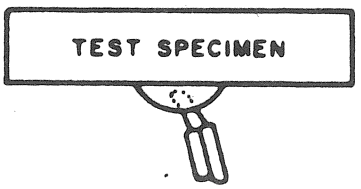

Measures temperature at surface but thermocouple wire may conduct some heat from or to ambient.

Improvement No. 2

Thermocouple wire is in contact with the surface to be measured for a length of at least 30 times the diameter of the thermocouple wire.

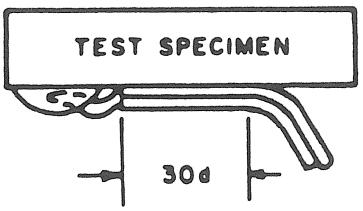

Alternative No. 1

Where soldering to the surface is either impossible or undesirable, a thin copper plate and a film of thermal grease act as a thermal path between thermocouple junction and component surface.

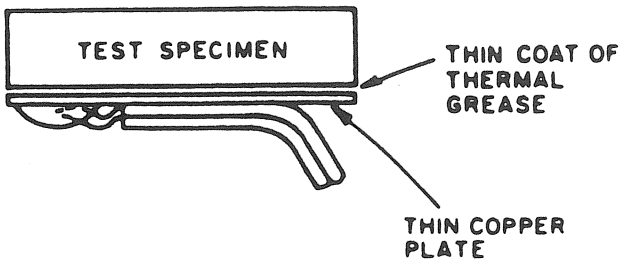

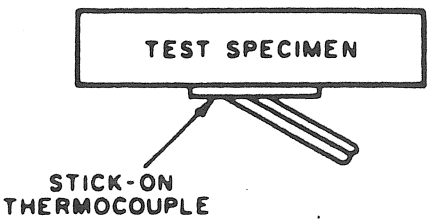

Alternative No. 2

Adhesive-backed thermocouple assemblies are available that meet the criteria for accurate temperature measurements. Examples of such thermocouples are given in Appendix C-5.

APPENDIX C-5

THERMOCOUPLES

HY-CAL Engineering

A Unit of General Signal

- ☐ **Small Size**
- ☐ **Easy Mount**
- ☐ **Fast Response**
- ☐ **High Accuracy**
- ☐ **Low Cost**

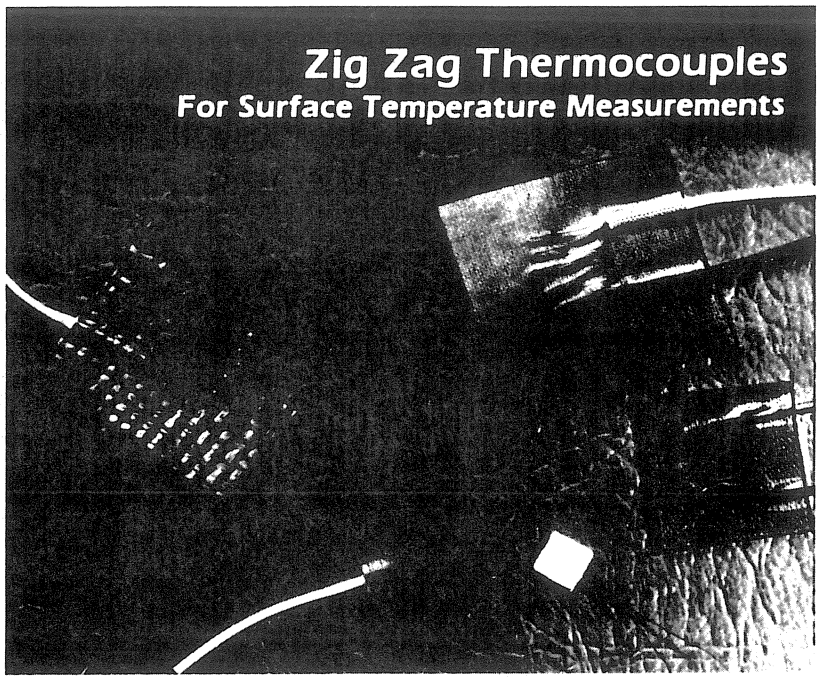

The Zig Zag Thermocouple is a low profile patch type surface sensor. In this configuration the thermocouple wires are inserted between two very thin insulating materials in a serpentine pattern with the thermocouple junction located near the center.

When the thermocouple is bonded to a surface the pattern wire is heated with the measuring junction, preventing conduction losses from the junction for maximum surface temperature measurement accuracy.

Three Models

Three models are available: Lo-Temp, Hi-Temp, and Very Hi-Temp. The Lo-Temp is manufactured in three patch sizes: 1", 5/8", and 1/2" square. These are encased in Kapton and include special pressure sensitive silicon adhesive backing.

The thermocouple junction in the Hi-Temp model is fused in Kapton, including the lead wire.

The Very Hi-Temp model is a 5 or 10 mil Zig Zag Thermocouple encased in ceramic, and is 3/16" x 5/16".

Fast Response

The microfine wire used for the Zig Zag thermocouple junction permits a response time of 20 milliseconds. The welded junction is kept to a size equal to the wire diameter of the two dissimilar metals, which increases the fast response capability.

Easy Mount

The Zig Zag can be mounted on any metallic or non-metallic clean surface. For the Lo-Temp models, simply remove the paper backing and mount. To bond the Kapton sensors use an epoxy adhesive, heat transfer paste, or other adhesive. The commercially available "Sauereisen No. 1" general purpose cement is recommended for the ceramic sensor.

Thermocouples

9650 Telstar Avenue · El Monte, CA 91731-3093 · (818)444-4000 · Telex 67-5548

General Specifications:

Temperature Range:	Lo-Temp;	−215°C to +175°C (−320°F to +350°F)
	Hi-Temp;	−215°C to +230°C (−320°F to +450°F)
	Very Hi-Temp;	* −65°C to +450°C (−150°F to +850°F)
Thermocouple Types:	J, K, T, E	
Patch Material:	Lo-Temp; Kapton* Hi-Temp; Kapton* Very Hi-Temp; Ceramic	
Wire Size:	5 mil or 10 mil	
Leads:	Lo-Temp; Leads 6″ Fiberglass sleeved. For longer leads 28 to 30 gauge FEP Teflon* insulated Thermocouple Wire	
	Hi-Temp; Leads are 28 to 30 gauge FEP Teflon* insulated Thermocouple Wire	
	Very Hi-Temp; Leads are 28 to 30 gauge fiberglass insulated Thermocouple Wire	
Accuracy:	Meets ANSI Standard Limits of Error	

*Trademark E.I. DuPont Co.

Thermocouple Styles

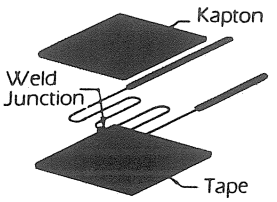

Model TC-2345
Lo-Temp
Encased in Kapton

Model TC-2345
Hi-Temp
Fused in Kapton

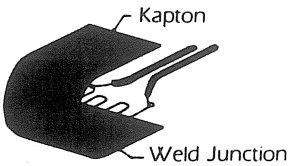

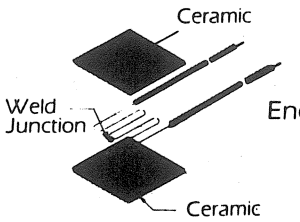

Model TC-2345
Very Hi-Temp
Encased in Ceramic

Ordering Information

Zig Zag Thermocouples

Basic Model	Description
TC-2345-A	Lo-Temp, Kapton-Encased; 1/2″ x 1/2″ x .010″ nom.
TC-2345-B	Lo-Temp, Kapton-Encased; 5/8″ x 5/8″ x .010″ nom.
TC-2345-C	Lo-Temp, Kapton-Encased; 1″ x 1″ x .010″ nom.
TC-2345-H	Hi-Temp, Kapton-Fused; 1″ x 1″ x .010″ nom.
TC-2345-P	Very Hi-Temp, Ceramic-Encased; 3/16″ x 5/16″ x .070″ nom. (Thermocouple Type T, and 10 mil Wire Size N.A.)

Code 1	Thermocouple Type
E	Chromel-Constantan
J	Iron-Constantan
K	Chromel-Alumel
T	Copper-Constantan

Code 2	Junction Wire Size
__	Specify Wire Size: 5 mil, or 10 mil

Code 3	Lead Wire Length
__	Specify in Inches (6″ Standard)

9650 Telstar Avenue · El Monte, CA 91731-3093 · (818)444-4000 · Telex 67-5548

863-84-2 PRINTED IN U.S.A.

Zig Zag Thermocouples

Basic Model	Description	Base Price
TC-2345-A	Lo-Temp, Kapton-Encased; 1/2" x 1/2" x .010" nom.	$16.50
TC-2345-B	Lo-Temp, Kapton-Encased; 5/8" x 5/8" x .010" nom.	$16.50
TC-2345-C	Lo-Temp, Kapton-Encased; 1" x 1" x .010" nom.	$16.50
TC-2345-H	Hi-Temp, Kapton-Encased; 1" x 1" x .010" nom.	$34.75
TC-2345-P	Very Hi-Temp, Ceramic-Encased; 3/16" x 5/16" x .070" nom. (Thermocouple Type T, and 10 mil Wire Size N.A.)	$34.75

Code 1	Thermocouple Type
E	Chromel-Constantan
J	Iron-Constantan
K	Chromel-Alumel
T	Copper-Constantan

Code 2	Junction Wire Size
——	Specify Wire Size: 5 mil, or 10 mil

Code 3	Lead Wire Length	
——	Specify in Inches (6" Standard)	If over 6", ADD/FT. $ .80

ADD/FT.

Total $

9650 Telstar Avenue•El Monte, CA 91731-3093•(818) 444-4000•Telex 67-5548•FAX (818) 444-1314

Celsius-Fahrenheit Conversions

$$°C = \frac{5(°F-32)}{9} \qquad °F = \frac{°C(9)}{5} + 32$$

To C	To Convert Degrees F or C	To F
-17.78	0	32
-12.22	10	50
-6.67	20	68
-1.11	30	86
4.44	40	104
10	50	122
15.56	60	140
21.11	70	158
26.67	80	176
32.22	90	194
37.78	100	212
43.33	110	230
48.89	120	248
54.44	130	266
60	140	284
65.56	150	302
71.11	160	320
76.67	170	338
82.22	180	356
87.78	190	374
93.33	200	392
98.89	210	410
104.44	220	428
110	230	446
115.56	240	464
121.11	250	482
126.67	260	500
132.22	270	518
137.78	280	536
143.33	290	554
148.89	300	572
154.44	310	590
160	320	608
165.56	330	626
171.11	340	644
176.67	350	662
182.22	360	680
187.78	370	698
193.33	380	716
198.89	390	734
204.44	400	752
210	410	770
215.56	420	788
221.11	430	806
226.67	440	824
232.22	450	842
237.78	460	860
243.33	470	878
248.89	480	896
254.44	490	914
260	500	932
	510-1000	
265.56	510	950
271.11	520	968
276.67	530	986
282.22	540	1004
287.78	550	1022
293.33	560	1040
298.89	570	1058
304.44	580	1076
310	590	1094
315.56	600	1112
321.11	610	1130
326.67	620	1148
332.22	630	1166
337.78	640	1184
343.33	650	1202
348.89	660	1220
354.44	670	1238
360	680	1256
365.56	690	1274
371.11	700	1292
376.67	710	1310
382.22	720	1328
387.78	730	1346
393.33	740	1364
398.89	750	1382
404.44	760	1400
410	770	1418
415.56	780	1436
421.11	790	1454
426.67	800	1472
432.22	810	1490
437.78	820	1508
443.33	830	1526
448.89	840	1544
454.44	850	1562
460	860	1580
465.56	870	1598
471.11	880	1616
476.67	890	1634
482.22	900	1652
487.78	910	1670
493.33	920	1688
498.89	930	1706
504.44	940	1724
510	950	1742
515.56	960	1760
521.11	970	1778
526.67	980	1796
532.22	990	1814
537.78	1000	1832
	1010-1500	
543.33	1010	1850
548.89	1020	1868
554.44	1030	1886
560	1040	1904
565.56	1050	1922
571.11	1060	1940
576.67	1070	1958
582.22	1080	1976
587.78	1090	1994
593.33	1100	2012
598.89	1110	2030
604.44	1120	2048
610	1130	2066
615.56	1140	2084
621.11	1150	2102
626.67	1160	2120
632.22	1170	2138
637.78	1180	2156
643.33	1190	2174
648.89	1200	2192
654.44	1210	2210
660	1220	2228
665.56	1230	2246
671.11	1240	2264
676.67	1250	2282
682.22	1260	2300
687.78	1270	2318
693.33	1280	2336
698.89	1290	2354
704.44	1300	2372
710	1310	2390
715.56	1320	2408
721.11	1330	2426
726.67	1340	2444
732.22	1350	2462
737.78	1360	2480
743.33	1370	2498
748.89	1380	2516
754.44	1390	2534
760	1400	2552
765.56	1410	2570
771.11	1420	2588
776.67	1430	2606
782.22	1440	2624
787.78	1450	2642
793.33	1460	2660

°Cool °Facts

9650 Telstar Avenue · El Monte, CA 91731-3093 · (818)444-4000 · Telex 67-5548

To C	To Convert Degrees F or C	To F
798.89	1470	2678
804.44	1480	2696
810	1490	2714
815.56	1500	2732
	1510–2000	
821.11	1510	2750
826.67	1520	2768
832.22	1530	2786
837.78	1540	2804
843.33	1550	2822
848.89	1560	2840
854.44	1570	2858
860	1580	2876
865.56	1590	2894
871.11	1600	2912
876.67	1610	2930
882.22	1620	2948
887.78	1630	2966
893.33	1640	2984
898.89	1650	3002
904.44	1660	3020
910	1670	3038
915.56	1680	3056
921.11	1690	3074
926.67	1700	3092
932.22	1710	3110
937.78	1720	3128
943.33	1730	3146
948.89	1740	3164
954.44	1750	3182
960	1760	3200
965.56	1770	3218
971.11	1780	3236
976.67	1790	3254
982.22	1800	3272
987.78	1810	3290
993.33	1820	3308
998.89	1830	3326
1004.44	1840	3344
1010	1850	3362
1015.56	1860	3380
1021.11	1870	3398
1026.67	1880	3416
1032.22	1890	3434
1037.78	1900	3452
1043.33	1910	3470
1048.89	1920	3488
1054.44	1930	3506
1060	1940	3524
1065.56	1950	3542
1071.11	1960	3560
1076.67	1970	3578
1082.22	1980	3596
1087.78	1990	3614
1093.33	2000	3632
	2010–2500	
1098.89	2010	3650
1104.44	2020	3668
1110	2030	3686
1115.56	2040	3704
1121.11	2050	3722
1126.67	2060	3740
1132.22	2070	3758
1137.78	2080	3776
1143.33	2090	3794
1148.89	2100	3812
1154.44	2110	3830
1160	2120	3848
1165.56	2130	3866
1171.11	2140	3884
1176.67	2150	3902
1182.22	2160	3920
1187.78	2170	3938
1193.33	2180	3956
1198.89	2190	3974
1204.44	2200	3992
1210	2210	4010
1215.56	2220	4028
1221.11	2230	4046
1226.67	2240	4064
1232.22	2250	4082
1237.78	2260	4100
1243.33	2270	4118
1248.89	2280	4136
1254.44	2290	4154
1260	2300	4172
1265.56	2310	4190
1271.11	2320	4208
1276.67	2330	4226
1282.22	2340	4244
1287.78	2350	4262
1293.33	2360	4280
1298.89	2370	4298
1304.44	2380	4316
1310	2390	4334
1315.56	2400	4352
1321.11	2410	4370
1326.67	2420	4388
1332.22	2430	4406
1337.78	2440	4424
1343.33	2450	4442
1348.89	2460	4460
1354.44	2470	4478
1360	2480	4496
1365.56	2490	4514
1371.11	2500	4532
	2510–3000	
1376.67	2510	4550
1382.22	2520	4568
1387.78	2530	4586
1393.33	2540	4604
1398.89	2550	4622
1404.44	2560	4640
1410	2570	4658
1415.56	2580	4676
1421.11	2590	4694
1426.67	2600	4712
1432.22	2610	4730
1437.78	2620	4748
1443.33	2630	4766
1448.89	2640	4784
1454.44	2650	4802
1460	2660	4820
1465.56	2670	4838
1471.11	2680	4856
1476.67	2690	4874
1482.22	2700	4892
1487.78	2710	4910
1493.33	2720	4928
1498.89	2730	4946
1504.44	2740	4964
1510	2750	4982
1515.56	2760	5000
1521.11	2770	5018
1526.67	2780	5036
1532.22	2790	5054
1537.78	2800	5072
1543.33	2810	5090
1548.89	2820	5108
1554.44	2830	5126
1560	2840	5144
1565.56	2850	5162
1571.11	2860	5180
1576.67	2870	5198
1582.22	2880	5216
1587.78	2890	5234
1593.33	2900	5252
1598.89	2910	5270
1604.44	2920	5288
1610	2930	5306
1615.56	2940	5324
1621.11	2950	5342
1626.67	2960	5360
1632.22	2970	5378
1637.78	2980	5396
1643.33	2990	5414
1648.89	3000	5432
	3010–3200	
1654.44	3010	5450
1660	3020	5468
1665.56	3030	5486
1671.11	3040	5504
1676.67	3050	5522
1682.22	3060	5540
1687.78	3070	5558
1693.33	3080	5576
1698.89	3090	5594
1704.44	3100	5612
1710	3110	5630
1715.56	3120	5648
1721.11	3130	5666
1726.67	3140	5684
1732.22	3150	5702
1737.78	3160	5720
1743.33	3170	5738
1748.89	3180	5756
1754.44	3190	5774
1760	3200	5792

9650 Telstar Avenue · El Monte, CA 91731-3093 · (818)444-4000 · Telex 67-5548

164-78-2
PRINTED IN U.S.A.

HY-CAL Engineering
A Unit of General Signal

Response Time of Typical Thermocouple

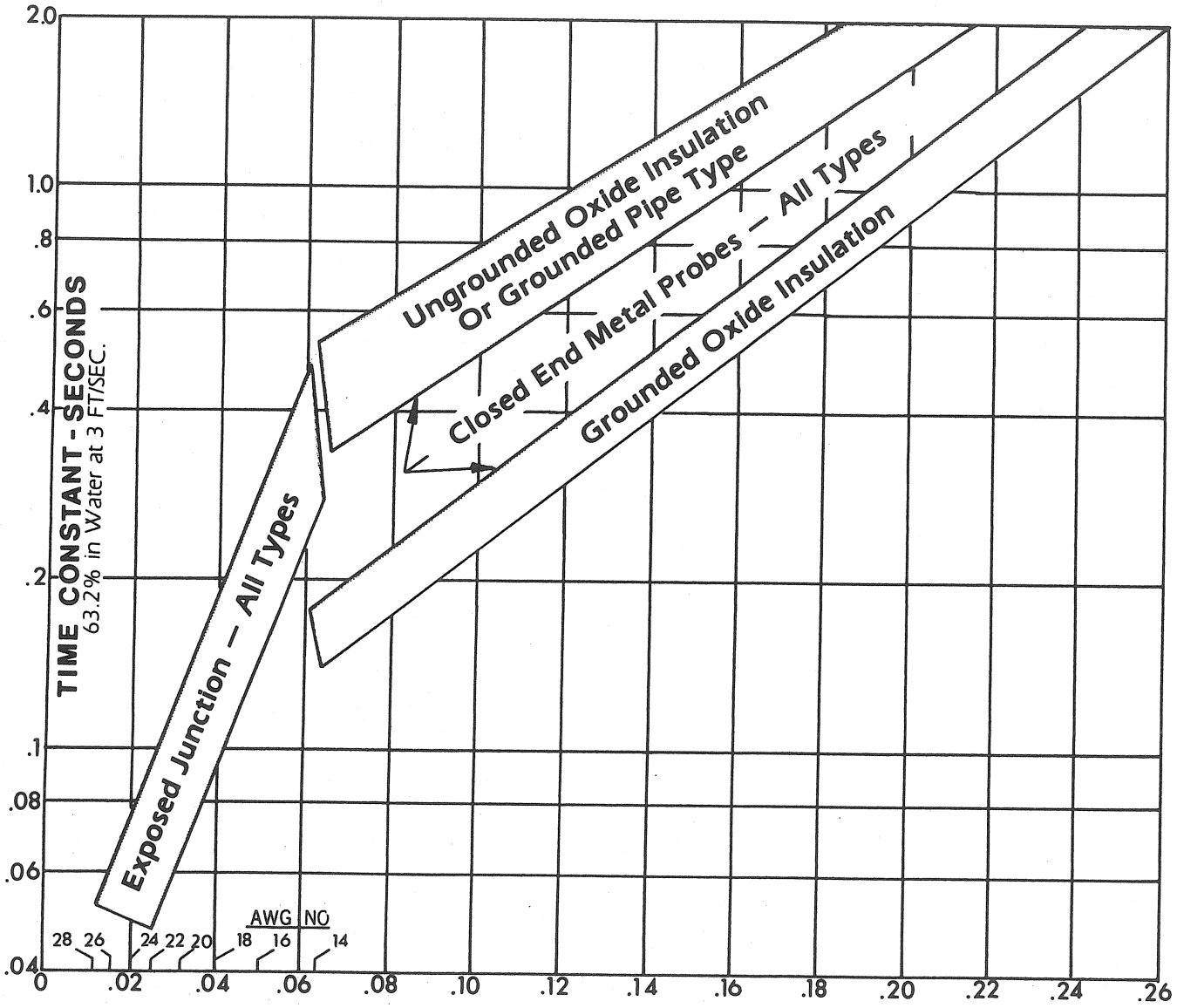

°Cool °Facts

9650 Telstar Avenue • El Monte, CA 91731-3093 • (818)444-4000 • Telex 67-5548

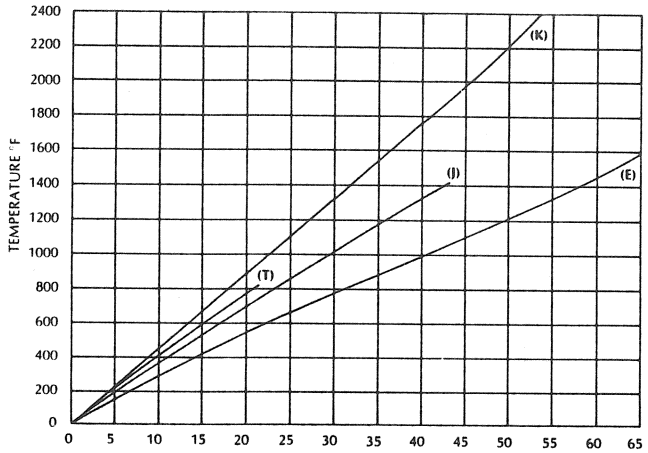

Low Temperature Thermocouple Materials

Type	Typical Thermocouple Material	Wire Color Code
K	CHROMEL—Alumel	(YELLOW—Red)
T	COPPER—Constantan	(BLUE—Red)
J	IRON—Constantan	(WHITE—Red)
E	CHROMEL—Constantan	(PURPLE—Red)

(Positive material in caps)

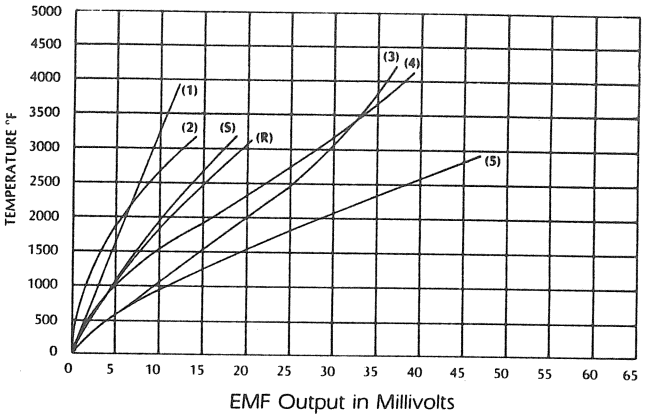

High Temperature Thermocouple Materials

Type	Typical Thermocouple Material	Wire Color Code
1	60% IRIDIUM 40% RHODIUM/Iridium	
2	PLATINUM 30% RHODIUM/Platinum 6% Rhodium	
3	TUNGSTEN 5% RHENIUM/Tungsten 26% Rhenium	
4	TUNGSTEN/Tungsten 26% Rhenium	
5	PT 5% MOLYBDENUM/Platinum 0.1% Molybdenum	
R	PLATINUM 13% RHODIUM/Platinum	(BLACK—Red)
S	PLATINUM 10% RHODIUM/Platinum	(BLACK—Red)

(Positive material in caps)

Recommended Temperature Limits for Protected Thermocouples

			Upper Temperature Limit for Various Wires Sizes (AWG)									
			8		14		20		24		28	
T/C Type	Nominal Temperature Range °C	°F	.128 in. °C	°F	.064 in. °C	°F	.032 in. °C	°F	.020 in. °C	°F	.013 in. °C	°F
E	– 184 to 871	– 300 to 1600	871	1600	649	1200	538	1000	427	800	427	800
J	0 to 760	32 to 1400	760	1400	593	1100	482	900	371	700	371	700
K	– 184 to 1260	– 300 to 2300	1260	2300	1093	2000	982	1800	871	1600	871	1600
T	– 184 to 371	– 300 to 700	399	750	371	700	260	500	204	400	204	400
N	0 to 1260	32 to 2300	1260	2300	1260	2300	1093	2000	982	1800	871	1600
R & S	0 to 1482	32 to 2700	—	—	—	—	—	—	1482	2700	—	—
B	538 to 1704	1000 to 3100	—	—	—	—	—	—	1704	3100	—	—
W	0 to 2315	32 to 4200	2315	4200	2315	4200	2315	4200	2315	4200	2315	4200

9650 Telstar Avenue • El Monte, CA 91731-3093 • (818)444-4000 • Telex 67-5548

411-78-2
Printed in U.S.A.

APPENDIX C-6
THERMOSTREAM® MINI-CHAMBER APPLICATION NOTE

C-6.1 GENERAL

While Temptronic Corporation ThermoStream® systems are designed principally for testing electronic components at temperature, they can also be used to test small printed circuit boards and other small, low mass, oddly shaped assemblies at temperature.

To use a ThermoStream® for PCB testing, the user requires only a very simple enclosure accessory which can be constructed, of easily available materials, using hand tools. This application note, covers the technical matters which should be considered in this construction.

C-6.2 TECHNICAL CONSIDERATIONS

a. The greater the mass of the assembly under test, the longer the time necessary for this assembly to reach the desired test temperature. We recommend that assemblies with masses no greater than eight (8) oz., be tested using a ThermoStream®.

b. The larger the test assembly (and thus the larger the test chamber), the larger will be the temperature gradient across the test assembly. A 6" x 6" PC card is the recommended upper size limit.

c. The test chamber volume should be kept low, consistent with room for air circulation around the test assembly. One-half inch of space on all sides of the test assembly is sufficient - more space may be detrimental as it will increase the system thermal loading.

d. The test chamber should be constructed using low thermal conductivity materials to minimize losses.

e. If possible, the test chamber should be constructed entirely of insulating material with no internal or external cover material. This will provide a chamber of low mass and low specific heat to minimize temperature excursion times.

f. Test chamber material should be chosen to withstand the test temperatures.

C-6.3 CHAMBER CONSTRUCTION

Sketch (SK 575) is provided to show the essential construction details for a typical printed circuit card temperature test chamber.

The following table, indicates some materials which conform to the technical considerations mentioned above, that could be used for chamber construction.

Temperature Range	Material	Adhesive	Source
-60°C to +70°C	Styrofoam Sheet[1]	White Glue	Lumber yard
-60°C to +100°C	Polyethelene Foam Sheet	Contact Cement	Packing material supplier
-60°C to +100°C	Elastomeric Sheet Insulation	Contact Cement	Refrigeration supply house
-60°C to +135°C	High Temperature Polyurethane Foam	Contact Cement	Foam Insulation suppliers (e.g. Eccofoam SH Emerson & Cummings Canton, MA 02021)
-60°C to +200°C	Silicon Rubber[2] Foam Sheet	RTV Silicone Rubber Adhesive Sealant	Temptronic Corp.

[1] For better durability, this material should be coated with an epoxy coating material (e.g. Eccoat 729 from Emerson & Cummings, Inc., Canton, MA 02021).

[2] Because of its relatively high price and lack of rigidity, this material should only be used as a chamber liner for high temperature testing.

1/2" thick with Styrofoam
3/8" thick with polyethylene and elastomeric sheet foams
1/4 " thick with polyurethane foam

C-6.4 TYPICAL CHAMBER TEST RESULTS

A 6½" H x 8½" W x 3" D (outside dimensions) chamber was constructed using polyethylene foam according to the construction details of SK 575. This chamber was attached to a standard TP450A and used to test a 3½" x 5" PC card which weighed four (4) oz.

PC Card Temperature Excursion Times in °C

-85°C	47°C	:	5 min. 30 sec.
-47°C	+85°C	:	3 min. 30 sec.

Temperature Gradient Across the Card

At +85°C	:	± 2°C
At -47°C	:	± 2°C

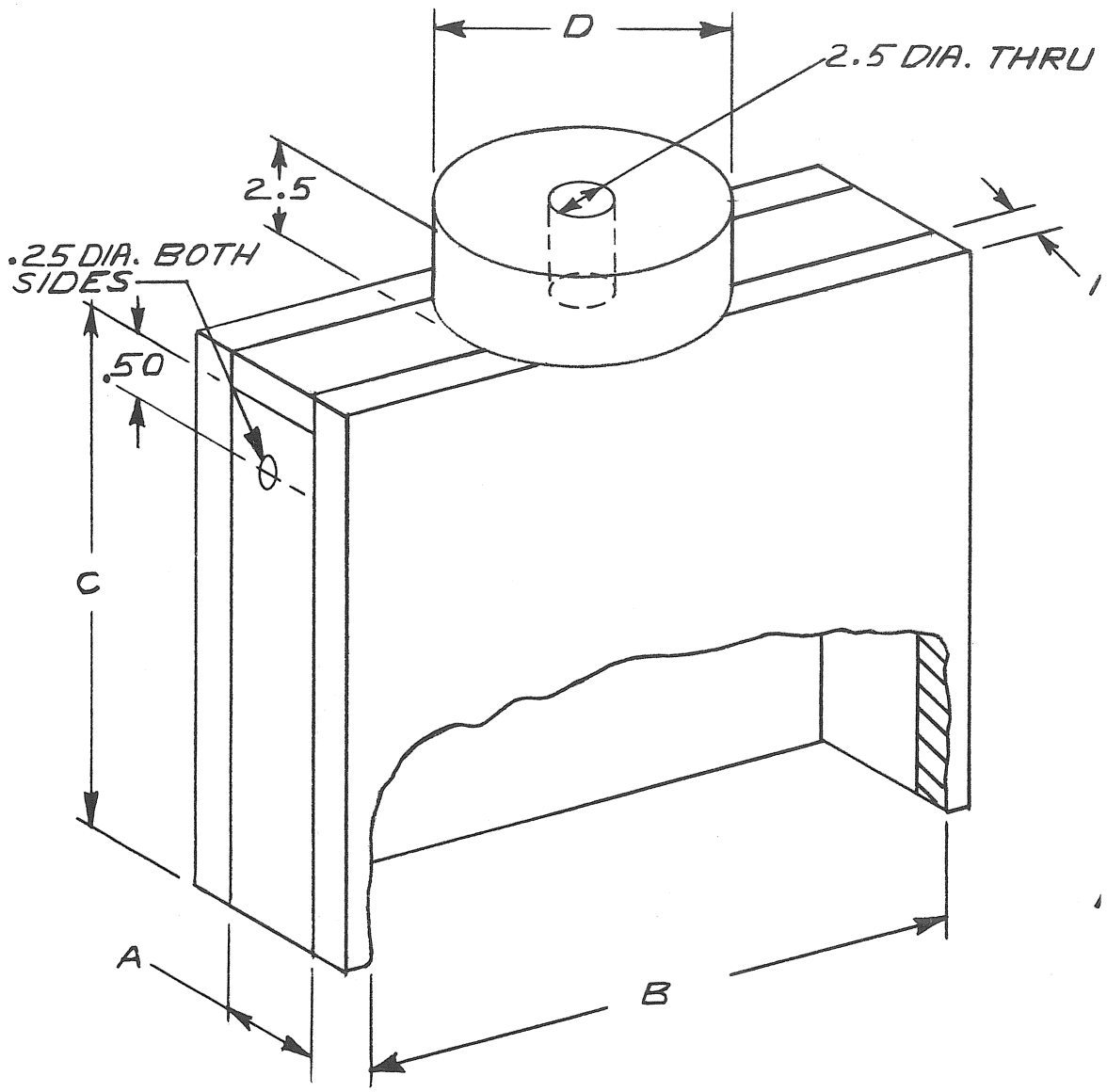

IMS1300 App C-6	TP0412A
NEXT ASSY	USED ON
APPLICATION	

APPENDIX D
REPLY CARDS AND HANG TAGS

D-1 INTRODUCTION

This section of the manual contains user/owner registration cards and hang tags imprinted with TPO412A operating instructions.

D-2 USER/OWNER REGISTRATION CARDS

The (4) pre-numbered post card size cards are supplied as a single sheet. Upon receipt of the system, card #1 should be completed and returned to Temptronic. When ownership changes or additional personnel become responsible for the system, the remaining cards should be used. By following this procedure, you will be assured of receiving any important information pertinent to your system. At the earliest convenient time after receiving card #4, a replacement sheet of cards will be sent. If a for any reason this sheet is missing or was not replaced contact Temptronic Service Department and request LMS1480.

LMS1480

NO POSTAGE
NECESSARY
IF MAILED
IN THE
UNITED STATES

BUSINESS REPLY MAIL
FIRST CLASS PERMIT NO. 43242 BOSTON, MASS

POSTAGE WILL BE PAID BY ADDRESSEE

Temptronic Corporation
55 Chapel Street
Newton, MA., U.S.A.
02158

Attention: Customer Service 4

NO POSTAGE
NECESSARY
IF MAILED
IN THE
UNITED STATES

BUSINESS REPLY MAIL
FIRST CLASS PERMIT NO. 43242 BOSTON, MASS

POSTAGE WILL BE PAID BY ADDRESSEE

Temptronic Corporation
55 Chapel Street
Newton, MA., U.S.A.
02158

Attention: Customer Service 3

NO POSTAGE
NECESSARY
IF MAILED
IN THE
UNITED STATES

BUSINESS REPLY MAIL
FIRST CLASS PERMIT NO. 43242 BOSTON, MASS

POSTAGE WILL BE PAID BY ADDRESSEE

Temptronic Corporation
55 Chapel Street
Newton, MA., U.S.A.
02158

Attention: Customer Service 2

NO POSTAGE
NECESSARY
IF MAILED
IN THE
UNITED STATES

BUSINESS REPLY MAIL
FIRST CLASS PERMIT NO. 43242 BOSTON, MASS

POSTAGE WILL BE PAID BY ADDRESSEE

Temptronic Corporation
55 Chapel Street
Newton, MA., U.S.A.
02158

Attention: Customer Service 1

USER/OWNER REGISTRATION CARD (3)

User Name: _____

Dept.: _____ Mail Stop: _____

Company: _____

Street: _____

City: _____ State: _____ Zip: _____

Telephone: (_____) _____-_____ Ext. _____

First Time User? ( ) Yes ( ) No

Previous user continues to require info. ( ) Yes ( ) No

System Model No.: TP_____

System Serial No.: _____

USER/OWNER REGISTRATION CARD (4)

User Name: _____

Dept.: _____ Mail Stop: _____

Company: _____

Street: _____

City: _____ State: _____ Zip: _____

Telephone: (_____) _____-_____ Ext. _____

First Time User? ( ) Yes ( ) No

Previous user continues to require info. ( ) Yes ( ) No

System Model No.: TP_____

System Serial No.: _____

USER/OWNER REGISTRATION CARD (1)

User Name: _____

Dept.: _____ Mail Stop: _____

Company: _____

Street: _____

City: _____ State: _____ Zip: _____

Telephone: (_____) _____-_____ Ext. _____

First Time User? ( ) Yes ( ) No

Previous user continues to require info. ( ) Yes ( ) No

System Model No.: TP_____

System Serial No.: _____

USER/OWNER REGISTRATION CARD (2)

User Name: _____

Dept.: _____ Mail Stop: _____

Company: _____

Street: _____

City: _____ State: _____ Zip: _____

Telephone: (_____) _____-_____ Ext. _____

First Time User? ( ) Yes ( ) No

Previous user continues to require info. ( ) Yes ( ) No

System Model No.: TP_____

System Serial No.: _____

D-3 HANG TAGS

A single perforated sheet containing (2) hang tags imprinted with the system Start-up and Shut Down procedures as outlined in Section 3 of the system manual, is provided here for your convenience.

It is recommended that each owner/operator of the system become familiar with all the information presented in Section 3 of the manual before operating the system using the hang tags.

Remove (1) tag and attach it to the microprocessor controller handle using (1) of the (2) beaded tie wraps located in the binder's back cover pocket. The second card and tie wrap are provided in the event the card in use becomes lost or damaged.

Additional tags (P/N LMS1490 rev. A-1) and tie wraps (P/N EP00770) are available from the sevice department. When ordering replacement tags always reference system Code Number.

TEMPTRONIC
CORPORATION
55 Chapel Street, Newton, MA 02158
Telephone (617) 969-2501
Telex: 200-119 TEMP UR

RECOMMENDED TP0412A THERMOSTREAM START-UP AND SHUT-DOWN PROCEDURES TO BE FOLLOWED WITH SYSTEM WHICH HAS BEEN PROPERLY INSTALLED USING REQUIRED INTERCONNECTIONS AS DESCRIBED IN THE SYSTEM OPERATOR'S MANUAL

Effective Date: 6/86 Revision: A-1

3-6 SYSTEM START-UP

This procedure is recommended for system start-up once the initial setup, interfacing, and checkout have been successfully performed.

1. Verify all electrical and gas connections as outlined in Section 3-2.
2. Set +25°C on the TEMPERATURE SET switch (use the middle switch if the 5 TEMPERATURE SET option is installed).
3. Set the MODE SELECT switch to the desired position (Heat Only or Heat/Cool).
4. If convenient, note the refrigeration gauge readings to verify that there is pressure in the system. This especially applies if system is to be operated in the HEAT/COOL mode.
5. Initiate power by depressing the POWER switch.
6. Both TEST and TRANSITION valves will open to allow a 90-second gas purge and the HEAD will raise. The purge cycle will start ONLY when there is sufficient gas flow (minimum 2 SCFM). A flashing FLOW lamp indicates a lack of gas flow. After 90 seconds, the purge will be complete and gas flow will stop.

   Upon power-up, the following constants are set:
   - — Temperature range limits of −70°C and +205°C;
   - — Automatic valve switching;
   - — "SOAK TIME" of zero (0) seconds;
   - — DUT control-constant for a 40-pin plastic device (applicable only if the DUT option is installed).

   To change any of these constants, refer to Section 3-8.
7. Position the primary/ThermoCap against an insulated surface during this procedure or whenever the system is operating but not interfaced to the tester. This will prevent either inadvertent operator contact with extreme temperature air or condensation inside the ThermoCap during cold temperature operation.
8. If the OVERHEAT indicator lights, depress the RESET switch, then the FLOW switch to initiate flow.
9. Wait for a system "READY" status indication, then begin desired test functions.

Techniques for Safe and Efficient Air Coupling

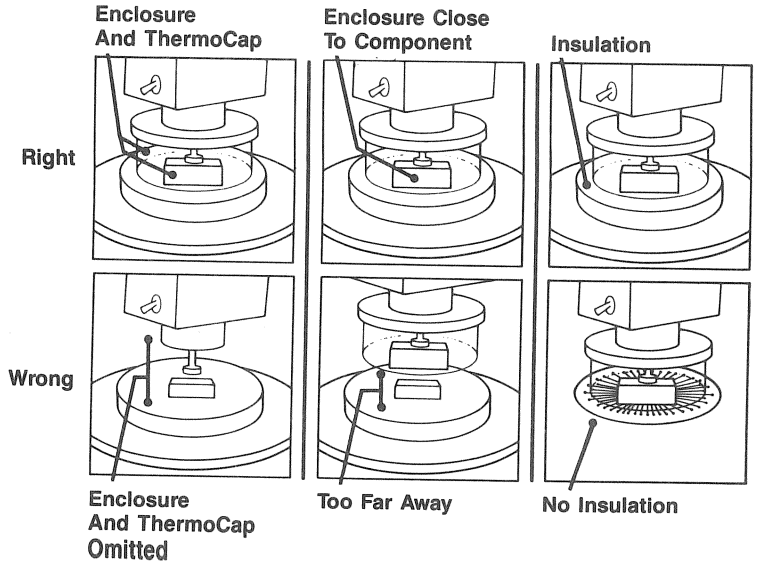

- The enclosure concentrates the gas flow for efficient heat transfer.
- The ThermoCap protects the test area from moisture
- The insulation protects the test area from temperature extremes.

Please refer to the appropriate **Temptronic System Manual** for more complete information or call our Customer Service Department (617) 969-2501.

3-7 SYSTEM SHUT-DOWN

The Model TP0412A ThermoStream System may be shut down at any time by simply depressing the system POWER switch on the front panel or throwing the system MAIN CIRCUIT BREAKER on the rear of the power controller. However, in the HEAT/COOL mode, the timed delay start-up sequence will be initiated during each start-up, so premature shut-downs or shut-downs for brief time periods (less than 30-minute durations) should be avoided. During these periods, simply leave the system on with the gas flow switch off.

The following procedure is suggested for routine system shut-down.

1. Set +25°C on the TEMPERATURE SET switch which is initiated during system start-up.
2. Command the system to go to +25°C. Wait for an "AT TEMP" indication before depressing the POWER switch.

TEMPTRONIC CORPORATION
55 Chapel Street, Newton, MA 02158
Telephone (617) 969-2501
Telex: 200-119 TEMP UR

RECOMMENDED TP0412A THERMOSTREAM START-UP AND SHUT-DOWN PROCEDURES TO BE FOLLOWED WITH SYSTEM WHICH HAS BEEN PROPERLY INSTALLED USING REQUIRED INTERCONNECTIONS AS DESCRIBED IN THE SYSTEM OPERATOR'S MANUAL

Effective Date: 6/86 Revision: A-1

3-6 SYSTEM START-UP

This procedure is recommended for system start-up once the initial setup, interfacing, and checkout have been successfully performed.

1. Verify all electrical and gas connections as outlined in Section 3-2.
2. Set +25°C on the TEMPERATURE SET switch (use the middle switch if the 5 TEMPERATURE SET option is installed).
3. Set the MODE SELECT switch to the desired position (Heat Only or Heat/Cool).
4. If convenient, note the refrigeration gauge readings to verify that there is pressure in the system. This especially applies if system is to be operated in the HEAT/COOL mode.
5. Initiate power by depressing the POWER switch.
6. Both TEST and TRANSITION valves will open to allow a 90-second gas purge and the HEAD will raise. The purge cycle will start ONLY when there is sufficient gas flow (minimum 2 SCFM). A flashing FLOW lamp indicates a lack of gas flow. After 90 seconds, the purge will be complete and gas flow will stop.

   Upon power-up, the following constants are set:
   - — Temperature range limits of −70°C and +205°C;
   - — Automatic valve switching;
   - — "SOAK TIME" of zero (0) seconds;
   - — DUT control-constant for a 40-pin plastic device (applicable only if the DUT option is installed).

   To change any of these constants, refer to Section 3-8.
7. Position the primary/ThermoCap against an insulated surface during this procedure or whenever the system is operating but not interfaced to the tester. This will prevent either inadvertent operator contact with extreme temperature air or condensation inside the ThermoCap during cold temperature operation.
8. If the OVERHEAT indicator lights, depress the RESET switch, then the FLOW switch to initiate flow.
9. Wait for a system "READY" status indication, then begin desired test functions.

Techniques for Safe and Efficient Air Coupling

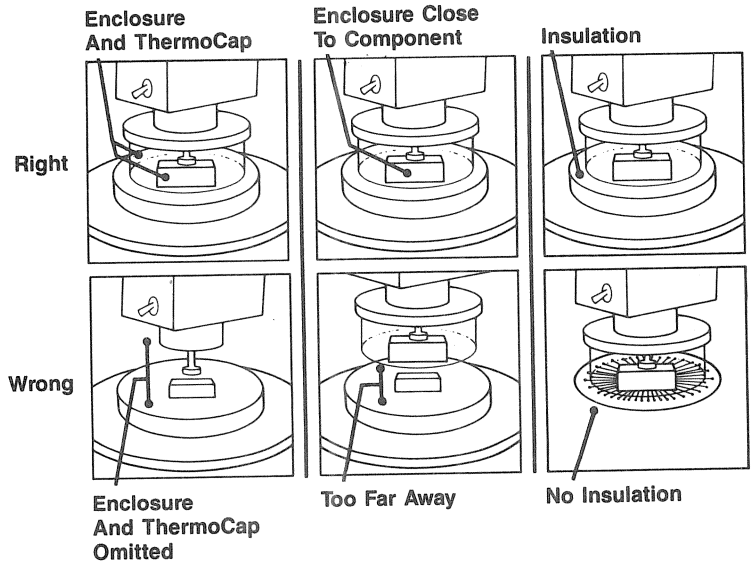

- The enclosure concentrates the gas flow for efficient heat transfer.
- The ThermoCap protects the test area from moisture
- The insulation protects the test area from temperature extremes.

Please refer to the appropriate **Temptronic System Manual** for more complete information or call our Customer Service Department (617) 969-2501.

3-7 SYSTEM SHUT-DOWN

The Model TP0412A ThermoStream System may be shut down at any time by simply depressing the system POWER switch on the front panel or throwing the system MAIN CIRCUIT BREAKER on the rear of the power controller. However, in the HEAT/COOL mode, the timed delay start-up sequence will be initiated during each start-up, so premature shut-downs or shut-downs for brief time periods (less than 30-minute durations) should be avoided. During these periods, simply leave the system on with the gas flow switch off.

The following procedure is suggested for routine system shut-down.

1. Set +25°C on the TEMPERATURE SET switch which is initiated during system start-up.
2. Command the system to go to +25°C. Wait for an "AT TEMP" indication before depressing the POWER switch.

APPENDIX E
SERVICE AND SALES REPRESENTATIVES

E-1 INTRODUCTION

This section provides a listing of Service and Sales Representatives. If your area is not covered, direct your inquiries to the factory as follows;

Sales

Temptronic Corporation
55 Chapel Street
Newton, MA 02158
U.S.A.

Tel. (617) 969-2501
Telex 200-119 TEMP UR

Service Telephone;

1-800-558-5080 Customers outside Massachusetts
1-(617)-965-4145 Customers within Massachusetts

NOTE These numbers are designated Service lines only and cannot be transfered to any other departments in Temptronic. The Corporate main number shown above should be used for all non-service related calls.

Telex;

number 211938; answer back SERVSUR

When calling for assistance, have the system model, serial, and code (if any) numbers available. These numbers can be found on the tag affixed to the back panel of either the MICROPROCESSOR or POWER CONTROLLERS.

E-2 SERVICE REPRESENTATIVES

Temptronic Corporation has established service centers throughout the world.

E-2.1 DOMESTIC SERVICE CENTERS

Arizona:	Allen Associates 7114 East Earll Drive Scottsdale, AZ 85251	Mr. Myron McKenzie
California: (Northern)	Econoscope 1010 Morse Avenue #5 Sunnyvale, CA 94086	Mr. Dennis Amiot
California: (Southern)	Ultimate Low, Inc. 1321 Calle Valle, Unit H San Clemente, CA 92672	Mr. Philip McSherry
Colorado:	Alpha Heating & A.C. 40-A Mount View Lane Colorado Springs, CO 80907	Mr. Roger Dockum Mr. Keith Kummerfeldt
Washington:	Elliot Bay refrigeration, Inc. 6353 6th Avenue South Seattle, WA 98108	Mr. Randall Sheppard
Florida:	Westbrook A.C. & Plumbing, Inc. P.O. Box 5459 Orlando, FL 32855	Mr. Edward O'Brien Mr. Robert Weathers
Ship To:	429N. Orange Blossom Trail Orlando, FL 32805	
Minnesota:	Jallen Refrigeration Service 7345 10th Avenue South Richfield, MN 55423	Mr. Rey Jallen
Texas:	Tinker Refrigeration P.O. Box 957	Mr. David Bell
Ship To:	112 North Henrietta/Suite "A" Lewisville, TX 75067	

E-2.2 EXPORT SERVICE CENTERS

Service is provided by/through each of the Sales Organizations representing those areas outside North America, refer to Section E-1.2.2.

E-3 SALES REPRESENTATIVES

Currently, Temptronic Corporation has established 32 Sales Representatives throughout the world.

E-3.1 DOMESTIC SALES REPRESENTATIVES

TERRITORY	ADDRESS	TELEPHONE
Arizona	Allen Associates 7114 Earll Drive Scottsdale, Az 85251	(602) 994-1305
New Mexico	Allen Associates P.O. Box 156 Alburquerque, NM 87103	(505) 345-4245
Texas (SW)	Alphatech, Inc. P.O. Box 15564 Austin, TX 78761	(512) 458-9179
(NW) Texas Oklahoma	Alphatech, Inc. 1807 Elmhurst Arlington, TX 76012	(817) 265-8455
Virginia	ARA Electronics of VA, Inc. 1710 Chadwick Drive Richmond, VA 23229	(804) 285-9309
Maryland Washington D.C.	ARA Electronics of VA, Inc. 610 Main Street P.O. Box 666 Laurel, MD 20707	(301) 953-1733
Indiana Wisconsin	AW, Inc. 3717 South Reed Road Kokomo, IN 46902	(317) 453-7671
Illinois	AW, Inc. 929 Waverly Elgin, IL 60120	(312) 894-7505

California	Comtronics, Inc. 3034 Lawrence Expressway Santa Clara, CA 95051	(408) 773-9800
Minnesota N & S Dakota	Dytec-North, Inc. 1821 University Avenue Suite 173S St. Paul, MN 55104	(612) 645-5816
Canada Except British Columbia	Giga-tron Associates 7 Slack Road (Suite 205) Ottawa, Ontario K2G OB7 Canada	(613) 225-4090
E. Pennsylvania S. New Jersey Delaware	Harry Nash Associates 652 Whitehead Road P.O. Box 5625 Trenton, NJ 08638	(609) 394-0900
Kansas Nebraska	Midtec Associates, Inc. 7702 Mize Road DeSoto, KS 66018	(913) 441-6565
Missouri Iowa	Midtec Associates, Inc. 100 Progress Parkway Suite 219 St. Louis, MO 63043	(314) 837-5200
Florida Georgia Alabama, Tennessee N & S Carolina	PSA, Inc. 2112 South Congress Avenue Suite 207 West Palm Beach, FL 33406	(305) 689-0575
N. New Jersey Long Island Hudson Valley Metropolitan NY	RMC Associates 8 Carriage Lane New City, NY 10956	(914) 634-0054
Upstate New York	Scientific Devices of New York, Inc. 122 Amsden Drive Rochester, NY 14623	(716) 334-2445
Southern Idaho Utah	Equipment Technology P.O. Box 970 8050 South 1300 West West Jordan, UT 84084	(801) 561-0222
Colorado	Equipment Technology 1898 Flatiron Court Boulder, CO 80301	(303) 444-0954

Washington NW Idaho British Columbia Oregon	System Specialists, Inc. 8229 44th Avenue West Suite A Mukilteo, WA 98275	(206) 355-0404
N. Ohio W. Pennsylvania	Technical Sales Associates 1938 Bromton Drive Lyndhurst, OH 44124	(216) 461-0826
West Virginia S. Ohio Kentucky	Technical Sales Associates Talbott Tower Suite 217 Dayton, OH 45402	(513) 222-1892
Michigan	Technical Sales Associates 4417 South Commerce Union Lake, MI 48085	(313) 363-1427
Connecticut Maine, Vermont Massachusetts New Hampshire Rhode Island	Tec Systems 80 Boylston Street Room 359 Boston, MA 02116	(617) 834-4663

E-3.2 EXPORT SALES REPRESENTATIVES

TERRITORY	ADDRESS	TELEPHONE
Belgium Luxemburg Netherlands Sweden Denmark Norway	Electronic Instruments NV-SA Rue Dries Straat 167 1200 Brussels Belgium	Tel:02/770 55 00 or 02/770 65 38 Tlx: 846 22747 (SIN B)
India	Electronics Continental Chinnappa Mansion (Post Bag 330) West Park Road, 8th Cross Malleswaram Bangalore 560 003 India	Tel:366665 Tlx:953 08458256 (ECEE IN)
Israel, Egypt Africa	Elentech Ltd. Segal International Bldg. Box 8367 24 Ben Maimon Jerusalem 91083 Israel	Tel:(02)410-140 Tlx:922 26144 ext. 7734 (26144 BXJM IL)

Italy	Elind Via Torino, 30 20063-CERNUSCO S/N (MI) Italy	Tel:(02)92.37.212 Tlx:843 331113 (331113 Elind 1)
Germany (East and West) Albania, Austria, Bulgaria, Hungary, Poland, Czechoslovakia, Romania, USSR, Yugoslavia	GSTmbh Goethestr. 21/4 Stock D-8000 Muenchen 2 West Germany	Tel:089/597511 Tlx:841 5216226 (GST D)
Japan	Hakuto Company Ltd. C.P.O. Box 25 Tokyo 100-91 Japan	Tel:03-341-2611 Tlx:781 22912 (BRAPAN A J22912)
Finland	Instrumentium Elektroniikka P.O.B. 64 SF-02631 ESPOO 63 Finland	Tel:358 5281 Tlx:857 12426
South Korea	Kye Poong Trading Co. Room 702,Il Yang Building #62, Doneui-Dong Chongro-ku C.P.O. Box 4653 Seoul, Korea	Tel:742-9664/5 Tlx:K28742
Hong Kong Phillipines Thailand	Lou Rauscher Associates Room 1122 Ocean Centre 5 Canton Road Tsim Sha Tsui, Kowloon GPO Box 11794 Hong Kong	Tel:3-689179/79 Tlx:780 55183 (Laura HX) Cable:LOURAUSCHR
Taiwan	Lumax International Corp. Limited 10th Floor 207, Tun Hwa N. Road Taipei, Taiwan R.O.C.	Tel:(02)7155 976 Tlx:22607
France	MB Electonique 606 Rue Fourny, B.P. No. 31 Zi-Centre 78530 Buc, France	Tel:956.81.31 Tlx:842 695414 (MB 695414F)
Australia	Teknis Philips Crescent Hendon, South Australia	Tel:Adelaide (08) 268 6122 Tlx:AA 88841

Great Britain (including England, Scotland, and Wales) Ireland	Test Reliability Limited P.O. Box 20 Petersfield Hants GU32 3JQ England.	Tel:(0730) 65412 Tlx: 851 869468 TRL G
Switzerland	W. Stolz AG Tafernstrasse 15 5405 Baden-Dahil Switzerland	Tel:41 568 71151 Tlx:845 54070

Effective Date: 7/87 Revision: A Supports System Code: 2

MAX REQUIREMENT FOR BOTH THERMOSTEAM AND TESTER FLOW RATE IS 12610 SCFM.

INSTRUCTION MANUAL

MODEL TP0412A

THERMOSTREAM® SYSTEM

"THERMOSTREAM" is a Registered Trade Mark of Temptronic Corporation

ALL RIGHTS RESERVED

The text of this publication, or any part thereof, may not be reproduced or transmitted in any form or by any means, electronic or mechanical, including photocopying, recording, storage in an information retrieval system, or otherwise, without the prior written permission of Temptronic Corporation.

NOTICE

Patents have been granted and/or patent applications are pending or are in process of preparation on all our developments.

Manual Number: LM 00620

PREFACE TPO412A MANUAL

Congratulations for selecting Temptronic Corporation's TPO412A ThermoStream® System to resolve your requirements for testing at temperature. Temptronic is the pioneer and leader in Airstream technology and applications since 1974.

This manual provides all the information required by a user to operate and maintain a ThermoStream® TPO412A Code 2 System and should not be used to support a Code 1 system. Applicable changes/updates will be supplied as necessary in a separate package.

The Table of Contents indicates every section and revision letter. In addition, each page is marked with the Effective Date, Revision letter, and Document name. With the exception of Appendices C-1 through C-6 and E every page also indicates Supports System Code: 2.

In the event you have previously operated/maintained a TPO412A System the following information is provided to explain the differences between Code 1 and Code 2 systems.

SOFTWARE CHANGES:

Code 2 information also applies to Code 2A systems which are Code 1 systems with Code 2 software only installed. This upgrade should be done through Temptronic Service Department.

System Code 1	System Code 2
HEAD lowers before raising on initial power on.	HEAD raises - downward action eliminated.

SOFTWARE CHANGES (cont.):

System Code 1	System Code 2
FLOW is on when HEAD is in the raised position requiring the operator to disable.	After the initial 90 second purge, FLOW stops when the HEAD is raised and initiated when lowered automatically. FLOW may be enabled when HEAD is in the up position if desired.
System upper temperature limit is +200°C.	System upper temperature limit is +205°C to enable large components to be brought to +200°C. System temperature specifications are still +200°C.
Air temperature is limited by programmed limits only when operating in DUT mode. Limits which are reprogrammable default to system limits of -70°C/+200°C on power up.	Air temperature is always limited by the current programmed limits. The limits which are reprogrammable default to the system limits of -70°C/+205°C on power up.
Switching of FLOW channels (TRANSITION to TEST) is automatic.	Selection of FLOW channels is possible; Automatic - selected at power on (operation is same as Code 1). TRANSITION - TRANSITION flow rate only. TEST - TEST flow rate only. TRANSITION & TEST - Combined flow rate of both channels.

SOFTWARE CHANGES (cont.):

System Code 1	System Code 2
OVERHEAT or temperature sense error condition will cause the system to disable the heater, open both TEST and TRANSITION channels permitting maximum continual cooling. If operating in the HEAT/COOL mode the system will cool to the maximum lower limit of the refrigeration system unless interrupted.	OVERHEAT or temperature sense error condition will cause the system to disable heater power, open both TEST and TRANSITION flow channnels and permit maximum flow for 10 seconds.
IEEE-488 address switch setting is read only on power up requiring the system to be turned off then on again after changing the switch setting to enter the new address.	IEEE-488 address switch setting is read when the RESET switch is depressed eliminating turning the system off then on to change the address. IEEE-488 software has been upgraded to support these changes. Upgraded IEEE-488 software requires system Code 2 software.
Dryer dessicant tower cycling is every 30 seconds as timed by the microprocessor.	Dryer dessicant tower cycling is every 30 seconds as timed by the microprocessor unless an "AT TEMP" has occurred which causes the timing sequence to be reset to zero (0) allowing another 30 seconds before switching of the towers takes place.

REFRIGERATION CHANGES:

Code 2 information also applies to Code 2B systems which are Code 1 systems with Code 2 refrigeration system only installed. This upgrade should be done through Temptronic Service Department.

System Code 1	System Code 2
Original design released '84.	Package redesigned with some component changes while principle operation remains the same. Noticeable appearance difference is pressure gauges mounted lower right rear corner of package.

TABLE OF CONTENTS

Section		Page	Revision
1	INTRODUCTION AND SPECIFICATIONS	1-1	A
	1-1 Manual Introduction	1-1	
	1-2 System Description	1-1	
	1-3 System Features	1-3	
	1-4 System Specifications	1-5	
	1-5 System Options and Accessories	1-6	
2	UNPACKING AND INSTALLATION	2-1	A
	2-1 Unpacking Information	2-1	
	2-2 Installation Planning	2-3	
	2-3 Input Power	2-4	
	2-4 Repackaging	2-5	
3	SYSTEM OPERATION	3-1	A
	3-1 Assembly Instructions	3-1	
	3-2 Interconnections	3-1	
	3-3 Operating Features	3-1	
	3-3.1 Microprocessor Controller (front pnl)	3-4	
	3-3.2 Microprocessor Controller (back pnl)	3-7	
	3-3.2.1 Microprocessor Controller (front pnl options)	3-8	
	3-3.2.2 Microprocessor Controller (back pnl options)	3-9	
	3-3.4 Power Controller (front pnl)	3-10	
	3-3.5 Power Controller (back pnl)	3-12	
	3-3.6 Primary Heat Exchanger	3-14	
	3-3.7 Secondary Heat Exchanger	3-16	
	3-4 System Operation	3-18	
	3-5 System Functional Checkout	3-20	
	3-6 System Start-Up	3-25	
	3-7 System Shut Down	3-26	
	3-8 Additional Microprocessor Functions	3-27	
	3-8.1 -980 thru -983 Routines (Control Constants)	3-28	
	3-8.2 -984/-985 Routines (Air Limits)	3-29	
	3-8.3 -986 Routine (Soak Times)	3-30	
	3-8.4 -987 Routine (Flow Mode)	3-31	
4	THEORY OF OPERATION	4-1	A
	4-1 ThermoStream Theory	4-1	
	4-2 System Functional Description	4-2	
	4-3 Subassembly Functions	4-5	
	4-3.1 Microprocessor Controller	4-5	
	4-3.1.1 Analog Section	4-6	
	4-3.1.2 Digital Section	4-6	
	4-3.2 Power Controller	4-8	
	4-3.3 Primary Heat Exchanger	4-9	
	4-3.4 Secondary Heat Exchanger	4-10	

Section		Page	Revision
5	MAINTENANCE	5-1	A
	5-1 Maintenance Introduction	5-1	
	5-2 General Maintenance	5-1	
	5-3 Calibration Introduction	5-2	
	5-3.1 Digital Thermometer Calibration	5-3	
	5-3.1.1 Equipment Required	5-3	
	5-3.1.2 Calibration Procedure (AN 6520-8A Digi Cal II)	5-3	
	5-3.1.3 Calibration Procedure (Millivolt Reference Standard)	5-5	
	5-3.1.4 Digital Thermometer Specifications	5-7	
	5-3.2 Analog Input Section Calibration	5-8	
	5-3.2.1 Equipment Required	5-8	
	5-3.2.2 Calibration Procedure	5-8	
	5-3.3 Flow Circuit Calibration	5-11	
	5-3.3.1 Equipment Required	5-11	
	5-3.3.2 Calibration Procedure.(Dwyer Gauge)	5-11	
	5-3.3.3 Calibration Procedure.(Sierra Meter)	5-13	
	5-3.4 DUT Calibration	5-14	
	5-3.4.1 Equipment Required	5-15	
	5-3.4.2 Calibration Set-Up	5-15	
	5-3.4.3 DUT Calibration Procedure	5-16	
6	SERVICE INFORMATION	6-1	A
	6-1 Service Information	6-1	
	6-1.1 Warranty	6-1	
	6-2 Troubleshooting	6-2	
	6-2.1 Failure Conditions At Start-Up	6-5	
	6-3 Microprocessor Controller Check-Out Procedures	6-6	
	6-3.1 -990 Routine (Calibration Mode)	6-6	
	6-3.2 -991 Routine (RAM Test)	6-7	
	6-3.3 -992 Routine (Temperature Set Switch Test)	6-8	
	6-3.3.1 Segment Selected	6-8	
	6-3.3.2 BCD Display	6-8	
	6-3.4 -993 Routine (A/D Check)	6-10	
	6-3.5 -994 Routine (Line Frequency Measurement)	6-11	
	6-3.6 -995 Routine (Front Panel Indicator Test)	6-12	
	6-3.7 -996 Routine (N/A)	6-12	
	6-3.8 -997 And -998 Routines	6-12	
	6-3.9 -997 Routine (IEEE-488 Address Switch Test)	6-13	
	6-3.10 -998 Routine (BCD I/O)	6-14	
	6-3.11 -999 Routine	6-14	
	6-4 Refrigeration Servicing	6-15	
	6-4.1 Equipment Required	6-16	
	6-4.2 Refrigeration Table	6-17	
	6-4.3 Dehydration and Charging Procedure	6-18	
	6-5 Heater Assembly Replacement	6-20	
	6-6 Spare Parts List	6-21	
7	SCHEMATIC/WIRING DIAGRAM LISTING	7-1	A
	7-1 Schematic/Wiring Diagram Listing	7-1	

Section		Page	Revision
8	APPENDICES	8-1	A
8-1	Appendix Introduction	8-1	
	Appendix A WARRANTY	A-1	A
	Appendix B OPTIONS/ACCESSORIES	B-1	A
	Appendix B-1 TP0412A THERMOSTREAM STAND	B-1.1	A
	B-1.1 Stand Introduction	B-1.1	
	B-1.2 Stand Assembly	B-1.2	
	B-1.3 Stand Features	B-1.4	
	B-1.4.1 Stand Options	B-1.8	
	B-1.4 Stand Installation	B-1.9	
	B-1.5 Stand Operation	B-1.11	
	B-1.5.1 Original Stand Controls	B-1.12	
	B-1.5.2 Interim Stand Controls	B-1.13	
	B-1.5.3 '85 Stand Controls	B-1.14	
	B-1.6 Options	B-1.15	
	B-1.7 Troubleshooting	B-1.15	
	Appendix B-2 Air/Gas Dryer Assembly	B-2.1	A
	B-2.1 Dryer Assembly	B-2.1	
	B-2.2 Dryer Features	B-2.2	
	B-2.3 Dryer Manual	B-2.3	
	B-2.3.1 General	B-2.4	
	B-2.3.2 Specifications	B-2.4	
	B-2.3.4 Mounting	B-2.5	
	B-2.3.5 Connections,Elec	B-2.5	
	B-2.3.6 Connections,Hose	B-2.5	
	B-2.3.7 Adjustments	B-2.5	
	B-2.3.8 Operation	B-2.5	
	B-2.3.9 Maintenance	B-2.6	
	B-2.3.10 Parts List	B-2.7	
	B-2.3.11 Access. Packaged Loose	B-2.7	
	B-2.4 Air Filter Assembly	B-2.9	
	Appendix B-3 Thermal Cap Options	B-3.1	A
	B-3.1 Introduction	B-3.1	
	B-3.2 Thermal Caps	B-3.1	
	B-3.3 Flexible Extender	B-3.3	
	B-3.4 Printed Circuit Board Enclosures	B-3.4	
	B-3.4.1 MiniZone Enclosure	B-3.4	
	B-3.4.2 MiniDome Enclosure	B-3.4	
	B-3.4.3 PCB Enclosure Features	B-3.7	
	B-3.4.4 Window Film Replacement	B-3.7	
	B-3.5 MiniHandler Thermal Accessory	B-3.9	
	Appendix B-4 Shroud and Insulation Kits	B-4.1	A
	B-4.1 Shrouds	B-4.1	
	B-4.2 Insulation Kits	B-4.3	

Section | Page | Revision

Appendix B-5 Remote Temperature Set Switch Option.....B-5.1.....A
B-5.1 Introduction.....B-5.1
B-5.2 Installation.....B-5.2

Appendix B-6 Buck Boost Transformer Option.....B-6.1.....A

Appendix B-7 5 Temperature Set Switch Option.....B-7.1.....A
B-7.1 Introduction.....B-7.1
B-7.2 Installation.....B-7.2
B-7.3 Internal Diagnostics.....B-7.2

Appendix B-8 IEEE-488 Option.....B-8.1.....A
B-8.1 Introduction.....B-8.1
B-8.2 Bus Interfacing.....B-8.2
B-8.3 Operation Under IEEE-488.....B-8.3
B-8.3.1 Address Switch Setting....B-8.3
B-8.3.2 Start-Up Under IEEE.....B-8.4
B-8.3.3 Command Messages.....B-8.5
B-8.3.3.1 Setting Temperature, Stand & Flow Control.....B-8.5
B-8.3.3.2 Example for Requesting Info.....B-8.7
B-8.3.3.3 Service Requests...B-8.7
B-8.3.3.4 HP-85 Examples.....B-8.7
B-8.4 Specification.....B-8.13
B-8.5 Internal Diagnostics (-997 Routine).....B-8.18

Appendix B-9 BCD Option.....B-9.1.....A
B-9.1 Introduction.....B-9.1
B-9.2 Internal Diagnostics.....B-9.3

Appendix B-10 DUT Control Option.....B-10.1.....A
B-10.1 Introduction.....B-10.1
B-10.2 Temperature Sensors.....B-10.5
B-10.3 Installation.....B-10.7
B-10.4 Fixturing.....B-10.8
B-10.4.1 "Spring" Type.....B-10.12
B-10.4.2 "Disc" Type.....B-10.12
B-10.5 DUT Console Features.....B-10.13
B-10.6 DUT Calibration.....B-10.14
B-10.7 Operation.....B-10.14

Section		Page	Revision
Appendix C	APPLICATION NOTES	C-1	A
Appendix C-1	ThermoStream® Principles	C-1.1	A
C-1.1	Introduction	C-1.1	
C-1.2	Temperature Control	C-1.1	
C-1.3	Heat Transfer	C-1.1	
C-1.4	High & Low Temperature Considerations	C-1.3	
C-1.5	Dew Point Considerations	C-1.4	
Appendix C-2	Interfacing Techniques	C-2.1	A
C-2.1	Utilization of Silicon Foam Insulation Kit	C-2.1	
C-2.2	Additional Interfacing Techniques	C-2.2	
Appendix C-3	Minimizing Test Specimen Temperature Stabilization Times	C-3.1	A
C-3.1	Minimizing The Test Zone Volume	C-3.1	
C-3.2	Use of Two Temperature Test Sequences	C-3.2	
C-3.3	Fixture Presoak	C-3.3	
C-3.4	Presoak	C-3.4	
Appendix C-4	Test Specimen Temperature Measurement	C-4.1	A
Appendix C-5	Thermocouples	C-5.1	A
Appendix C-6	ThermoStream® Mini-Enclosure Application Note	C-6.1	A
C-6.1	General	C-6.1	
C-6.2	Technical Considerations	C-6.1	
C-6.3	Chamber Construction	C-6.2	
C-6.4	Typical Enclosure Test Results	C-6.4	
Appendix D	REPLY CARDS AND HANG TAGS	D-1	A
D-1	Introduction	D-1	
D-2	User/Owner Registration Card	D-1	
D-3	Hang Tags	D-3	
Appendix E	SERVICE & SALES REPRESENTATIVES	E-1	A
E-1	Introduction	E-1	
E-2	Service Representatives	E-2	
E-2.1	Domestic Service Centers	E-2	
E-2.2	Export Service Centers	E-3	
E-3	Sales Representatives	E-3	
E-3.1	Domestic Sales Reps	E-3	
E-3.2	Export Sales Reps	E-5	

LIST OF ILLUSTRATIONS

Section	Figure		Page
1	1-1	Typical TP0412A ThermoStream System.....	1-2
2	2-1	Refrigeration Balance Pressures.....	2-2
3	3-1	Microprocessor Controller Front Panel.....	3-4
3	3-2	Microprocessor Controller Back Panel.....	3-7
3	3-3	Microprocessor Cont. Front Panel Option.....	3-8
3	3-4	Microprocessor Cont. Back Panel Options.....	3-9
3	3-5	Power Controller Front Panel.....	3-10
3	3-6	Power Controller Back Panel.....	3-12
3	3-7	Primary Heat Exchanger (WAND).....	3-14
3	3-8	Secondary Heat Exchanger.....	3-16
4	4-1	Airstream/DUT Block Diagram.....	4-2
4	4-2	System Block Diagram.....	4-3
4	4-3	Analog Circuit Functional Diagram.....	4-6
4	4-4	Digital Circuit Functional Diagram.....	4-7
4	4-5	Pneumatic Diagram.....	4-9
4	4-6	Primary Heat Exchanger.....	4-10
4	4-7	Cascade Refrigeration System.....	4-12
5	5-1	Calibration Adjustment Poteniometers For DTM.	5-4
5	5-2	Setup for Calibration of Digital Thermometer.	5-5
5	5-3	Flow Adjustment Poteniometer Location.....	5-12
B-1	B-1.1	Floor Stand.....	B-1.1
B-1	B-1.2	Stand Features and Controls.....	B-1.4
B-1	B-1.3	Original Stand Controls.....	B-1.12
B-1	B-1.4	Interim Stand Controls.....	B-1.13
B-1	B-1.5	'85 Stand Controls.....	B-1.14
B-2	B-2.1	Air Dryer.....	B-2.1
B-2	B-2.2	Internal View of Dryer Assembly.....	B-2.2
B-3	B-3.1	Flexible Extender with Wall Thermal Cap.....	B-3.3
B-3	B-3.2	MiniHandler Thermal Accessory Configuration..	B-3.10
B-3	B-3.3	MinHandler Interfaced to System/DUT Option...	B-3.10
B-5	B-5.1	Remote Temperature Set Switch.....	B-5.1
B-7	B-7.1	5 Temperature Set Switch Module.....	B-7.1
B-8	B-8.1	TP0412A IEEE-488 I/O.....	B-8.2
B-10	B-10.1	DUT Option Console.....	B-10.1
B-10		Curve "Spring" Sensor vs "Disc" Sensor.....	B-10.6
B-10	B-10.2	DUT Console & Microprocessor Cont. Inter.....	B-10.7
B-10	B-10.3	DUT Test Fixture & Interface.....	B-10.9
B-10		Test Socket Modification "Spring Type".....	Drawing B4322
B-10		Test Socket Modification "Disc Type".....	Drawing B4714
C-1	C-1.1	ThermoStream® Air Temp. & DUT Temp vs Time...	C-1.2
C-2	C-2.1	Typical Foamed Board Assembly.....	C-2.2
C-2		Test Temperatures Below Ambient.....	C-2.4

LIST OF TABLES

Section	Table		Page
6	6-1	System Troubleshooting Procedures	6-2
6	6-2	Refrigeration Data	6-17
B-9	B-9.1	BCD Option Interface Connector Pin Assignments	B-9.2
C-3	C-3.1	Results of Tests Using a Reduced Test Zone Volume	C-3.2
C-3	C-3.2	Results of 2 Temperature Test Sequences	C-3.3
C-3	C-3.3	Results of Tests in which Test Fixturing Remained AT Test Temperature	C-3.3

GLOSSARY OF TERMS

Primary Heat Exchanger - WAND, Foamed Heater Ass'y or simply heater

Secondary Heat Exchanger - Cascade Refrigeration System

Suction Line Assembly - Umbilical between WAND and Cascade - distributed evaporator

LIST OF ABBREVIATIONS

DUT - Device Under Test

CFM - Cubic Feet Per Minute

SCFM - Standard Cubic Feet per Minute

SCFH - Standard Cubic Feet per Hour

PSIG - Pounds per Square Inch Gauge

BCD - Binary Coded Decimal

CW - Clockwise

CCW - Counter Clockwise

TEV - Thermal Expansion Valve

PCB - Printed Circuit Board

EXT - External

T/C Thermocouple

SECTION 1
INTRODUCTION AND SPECIFICATIONS

1-1 MANUAL INTRODUCTION

The information provided in this manual is intended to assist in the installation and normal operation of the TP0412A ThermoStream® System. It is essential to follow the precautions and procedures presented here for maximum system performance and reliability.

Throughout this manual, the terms "gas" and "air" will be interchanged when the discussion pertains to the flow of the stream medium. The term "gas" in this instance should not be confused with the refrigerant used in the refrigeration system, but should be understood to be either dry nitrogen or dry air.

A four part reply card is provided in Appendix D. Please take the time now to complete and return one for our records. Thank you in advance for your cooperation in this matter.

1-2 SYSTEM DESCRIPTION

The TP0412A ThermoStream® System is a high capacity, microprocessor-based, modular, thermal inducing system designed to provide a controlled thermal environment for testing electronic components, modules, and small circuit boards at temperatures between -70°C and +200°C.

++++++++++
+ WARNING +
++++++++++

The test fixture may require special considerations to accommodate the temperature range of this system.

This system is comprised of four basic components, See Figure 1-1. A microprocessor-based temperature controller (1) which may be positioned away from the other components, allows the desired test temperature to be input and gives a digital readout of the gas stream temperature. A secondary heat exchanger (2), a cascade refrigeration system, to cool the gas stream on its way to the primary heat exchanger. A power controller unit (3) distributes all ac and dc power to the other assemblies and accessories as well as provides gas flow indication and control. The primary heat exchanger (4) houses the heater and directs the stream of temperature controlled dry gas at the device under test (DUT). It also supports the optional ThermoCaps which interfaces to the tester and the enclosures used to encapsulate the DUT.

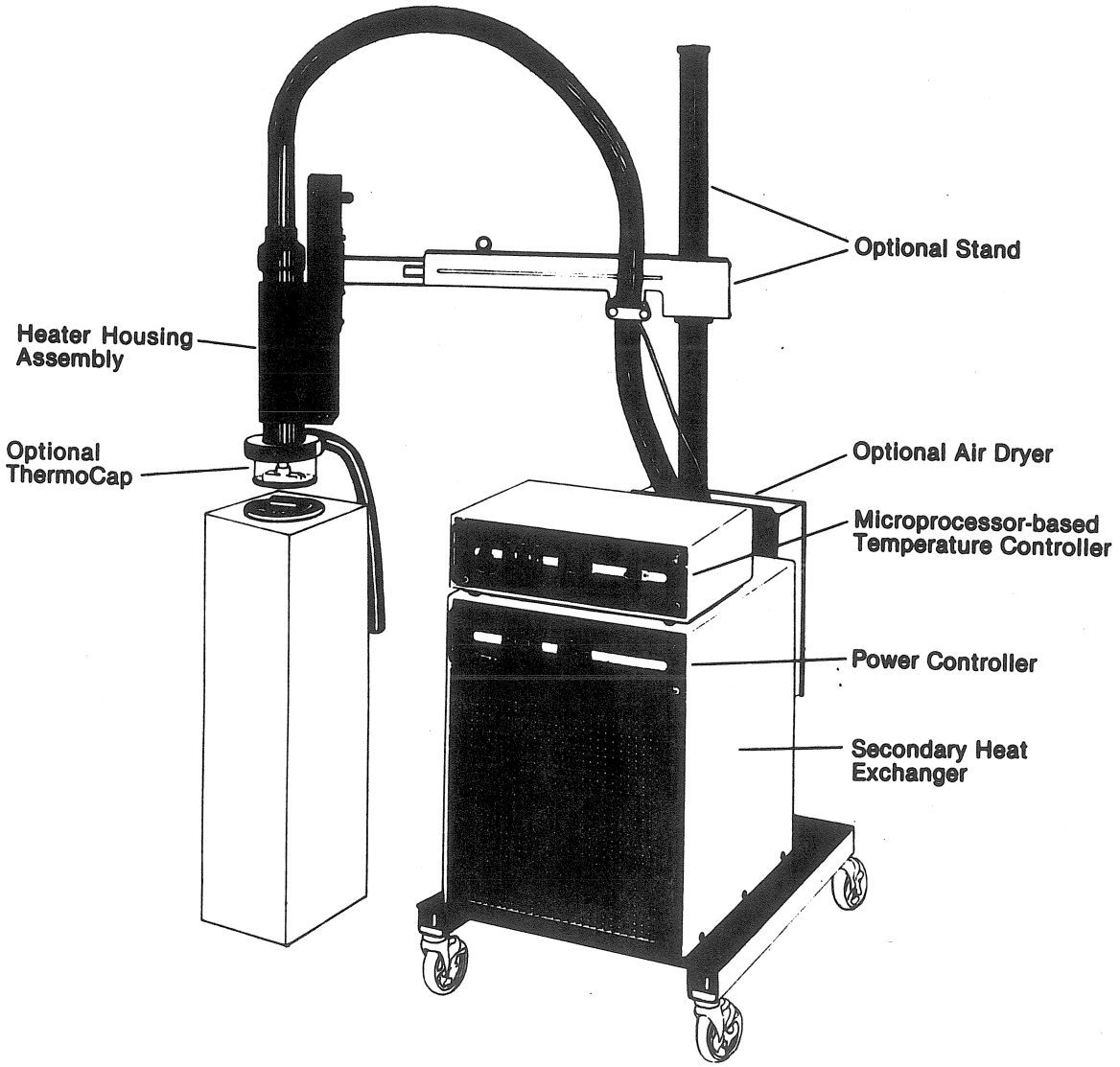

Figure 1-1. Typical TP0412A ThermoStream® System

The system is self-contained; however, the user must provide necessary electrical power and a dry gas source. The gas source may be dry nitrogen (N_2). Compressed air is acceptable, however, if conditioned to -60°C dew point and prefiltered to remove any contaminates which may cause damage to either the DUT, tester, or system. If no dry gas source is available, the optional air dryer (See Appendix B-2) must be installed between the gas source and the system.

1-3 STANDARD SYSTEM FEATURES

The TP0412A ThermoStream System is equipped to provide the following:

- Wide temperature range: -70°C to +205°C at 5 liters/sec (10SCFM)
- Less than 90 seconds transition time, dry gas stream temperature only, between temperature extremes
- Unique thermal coupling to the DUT provides fastest transition times and highest accuracy for a given flow rate
- Microprocessor-based controller with internal diagnostic function and dedicated calibration mode
- "Overheat", "Out of Range" and "At Temperature" indications
- Built-in safety features such as resettable circuit breaker and independent heater case temperature sensor
- Dual air/gas flow system for both rapid temperature change and gas conservation while holding the DUT at test temperature
- Resettable overheat protection
- Adjustable (2 to 10SCFM) air flow rate with BAR-LED flow readouts in both SCFM and liters/second
- Design permits flexibility in the location of various components to best suit the user's space, operation and environmental conditions
- Self-contained refrigeration system provides all necessary cooling for dry gas medium, eliminating the need for liquid nitrogen or CO_2 to assist in cooling.

- Non-breakable, easily oriented shrouds (enclosures) available for most component package configurations as well as for small circuit boards.

- Double wall Thermal Cap enclosing the test site surfaces prevents condensation or frost under normal environmental and testing conditions.

- With the optional stand, the primary heat exchanger may be rotated ±90° from a center position allowing 180° freedom of air flow direction. With minimal effort, this center position may be re-adjusted, enabling a different quadrant to be covered.

Refer to Section 1-5 for a listing of the available standard options and accessories.

1-4 SYSTEM SPECIFICATIONS

Temperature Range:
-70°/+205°C (1 to 5 liters/sec. or 2 to 10SCFM).
[OVERHEAT pre-set at +210°C]

Temperature Accuracy:
±2°C or ±2%, whichever is greater, within the system operating range (limits)

Temperature Repeatability of Component:
±0.5°C (provided same set temperature)

Temperature Stability of Component:
±0.5°C typical (provided same set temperature)

Controller Type:
PID (Proportional, Integral, Derivative) zero-cross AC

Input Gas Requirements:
+18 to +32°C (64 - 90°F) dry nitrogen or dry air
-57°C (-70°F) dew point supplied at 65psig.

Output Gas Flow:
1-5 liters/sec (2-10SCFM)

Electrical Source: (For systems manufactured prior to System S/N 8412882: 220vac, 30 amp service with receptacle for Hubbell twist lock connector (Hubbell P/N 2620).

For systems manufactured after System S/N 8412882: 220vac ±20v, 20 amps at 50/60 hz service with receptacle for Hubbell twist lock connector (Hubbell P/N 2321).

Dimensions:

	Width		Height		Depth		Weight	
	cm	(in)	cm	(in)	cm	(in)	kg	(lbs)
Controller	48.9	(19.25)*	15.2	(6.0) **	34.3	(13.5)	7.7	(17)
Htr. Ass'y.	8.9	(3.5)*	62.9	(24.75)**	--		--	
Refrig.	48.9	(19.25)*	58.4	(23.0)	59.7	(23.5)	86.2	(190)
Thermal Cap	10.2	(4.0)*	9.5	(3.75)	--		--	

*
**Diameter
Length

1-5 SYSTEM OPTIONS AND ACCESSORIES

The standard Model TP0412A ThermoStream® System is designed to readily accept a variety of options and accessories, allowing the user to configure the system for a specific requirement. Separate appendices have been devoted to each.

Though these features may be added at any time to the system after manufacture, some options or accessories may require returning the system to the factory for modification.

Microproccessor Controller Options:

Item Description	TEMPTRONIC PART NUMBER	Refer To Appendix
Single Temperature Set Module	SA 35900	B-7
Five Temperature Set Module	SA 32160	B-7
IEEE Interface	SA 32661	B-8
BCD Interface	SA 34560	B-9

System Accessories:

Floor Stand	ZHS 42750	B-1
Floor Stand Foot Switch Assembly	ZAK 39780	B-1
Air Dryer	ZAD 40520	B-2
*Air Filter Assembly	ZAD 40510	B-2
*Single Wall ThermoCap	ZAK 42550	B-3
*Double Wall ThermoCap	ZAK 42540	B-3
Double Wall ThermoCap	ZAK 42480	B-3
Shroud Kits	See Appendix	B-4
Remote Control Assembly	SA 36100	B-5
Buck Boost Transformer	See Appendix	B-6
DUT Control	ZRM 42180	B-10

10 ft. Interconnecting Power Cable	SA 39904
25 ft. Interconnecting Power Cable	SA 39906
10 ft. Interconnecting Thermocouple Cable	SA 38962
25 ft. Interconnecting Thermocouple Cable	SA 38963
10 ft. I/O Interconnecting Cable	SA 36212
25 ft. I/O Interconnecting Cable	SA 36213

* Appropriate Non Conductive Shroud Kits supplied with ThermoCaps. Conductive Shroud Kits are available at additional charge.

SECTION 2
UNPACKING AND INSTALLATION

2-1 UNPACKING INFORMATION

The Model TP0412A ThermoStream System is shipped in one container unless the optional floor stand is purchased, when the vertical post is shipped separately. All interconnecting cables and any accessories are packed in the same container as the system.

When received, the package should be examined for any signs of mishandling or damage during shipment.

NOTE

If there are any obvious signs of damage when the package is received, contact the carrier immediately and do not proceed with the installation. Since the shipment is made FOB factory, you should consult your administration concerning claims for shipping damage.

When removing the system from the pallet, DO NOT PULL OR STRESS THE SUCTION LINE ASSEMBLY. Save all packaging material in the event the system is reshipped in the future. After the system has been unpacked, the following visual inspections should be made:

1. Verify all items purchased are accounted for.

2. Verify indicator lights and switches are in place and intact.

3. Check all cable connector pins for proper alignment.

4. Verify all chassis/cabinet mounting screws are secure.

5. Verify fuse and fuse holder in rear of microprocessor controller are in place and intact. Check integrity and switch position of system circuit breaker on power controller back panel.

6. Read the refrigeration pressure gauges through the secondary heat exchanger rear screen (see Figure 2-1). This is an important reading for future reference in case there are refrigeration problems. Should any gauge read "0" contact the factory.

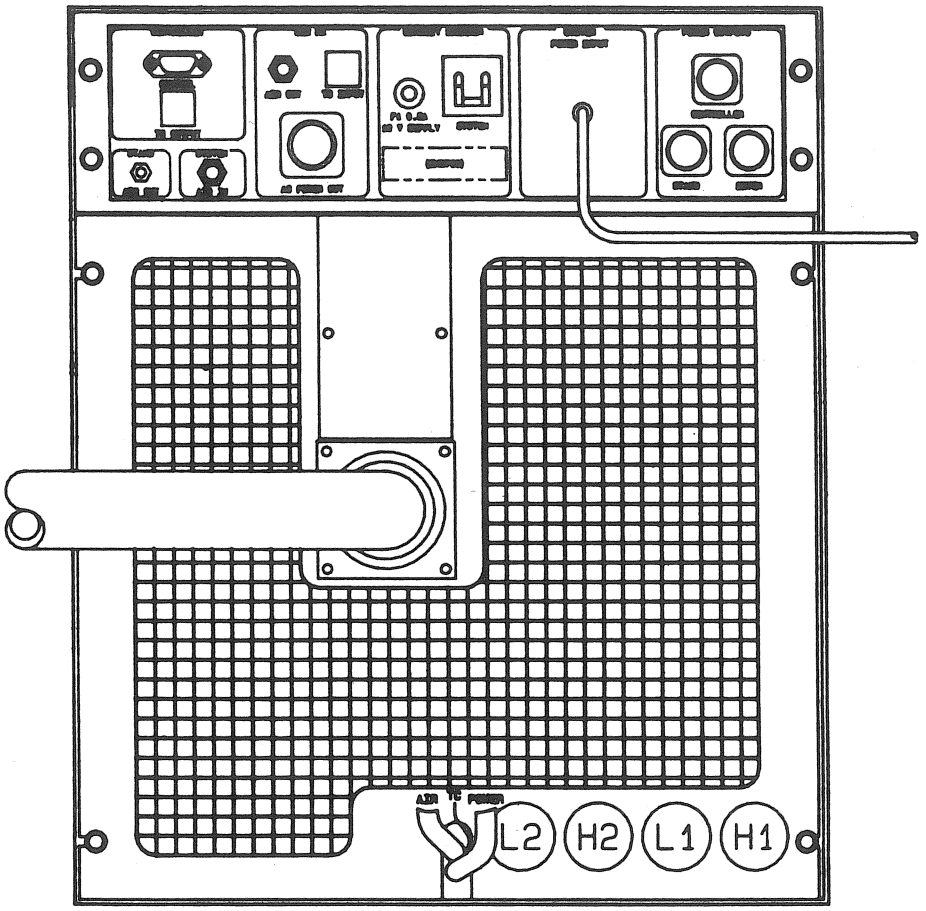

Figure 2-1. Refrigeration Balance Pressures.

Record the gauge readings here.
Left gauges (2nd stage pressures): H2 _____ L2_____
Right gauges (1st stage pressures): H1 _____ L1 _____
Room temperature at time of reading: _____°F

2-2 INSTALLATION PLANNING

In planning the installation of the Model TP0412A ThermoStream® System, the following should be considered:

1. Position the system to allow convenient viewing and easy access to both the front and rear panel switches and connections. All operational controls, however, are front panel mounted.

2. Place the system so the primary heat exchanger can easily be positioned at the test site without stretching, straining, or forming sharp bends in the suction line assembly.

3. A minimum of one (1) foot of free air space should be made available around the front and rear of the secondary heat exchanger. The ambient at the front should never exceed 30°C (86°F) because the compressors can overheat and their thermal cutout can be actuated.

4. Provide convenient access to the power source to eliminate the use of long extension cords. The supplied power cord is ten (10) feet long, except for those supplied to European countries. (see Section 2-3).

   Also, locate the system in reasonable proximity to the dry gas source. The gas supply hose provided is ten (10) feet long. Longer hoses can be used if required but care should be exercised to avoid using hosing or joints that may allow moisture to penetrate the system or reduce flow. For very long distances, a hose of larger diameter is recommended to minimize gas/air flow resistance.

5. System operation and performance will be adversely affected if the laws of heat transfer are ignored. Insulating materials are supplied and should be used. See Appendix C-2 for examples of recommended interfacing techniques which will protect the tester and aid in system performance. All materials used at the test-site, such as the socket, should be operable at the temperatures which the system can supply.

2-3 INPUT POWER

The standard Model TP0412A ThermoStream System manufactured prior to System S/N 8412882 requires a single 220 vac, 30 amp., 50/60 hz service. The receptacle should accept a Hubbell twist lock connector (Hubbell P/N 2620). Systems manufactured after System S/N 8412882 require a single 220 vac, 20 amp 50/60 hz. In both cases, the power source should be noise-free to prevent interference with the microprocessor operation.

****
* CAUTION *
****

Line voltage should be between 200 and 240 volts ac, ideally 220 volts. If subjected to levels above or below these limits, make provisions to stabilize it as close to 220 volts as possible but definitely between 200 and 240 volts by means of buck/boost transformers or constant voltage transformers.

2-4 REPACKAGING

If the system is to be shipped to another location, repackage the system in the original shipping carton and packaging material per drawing D4797 included in this section. In the event the original packaging material is not available or reuseable new materials may be obtained from Temptronic's Service Department.

When utilizing your own packaging materials observe the technique and concept presented on drawing D4797 and check with the freight carrier chosen for any weight or size restrictions.

Prior approval is required before shipping the system to a Temptronic Sales/Service Office, or to the factory. It is recommended that a tag be attached to the system stating the owner's name, address, telephone number, system model and serial numbers and reason for return.

SECTION 3
SYSTEM OPERATION

3-1 ASSEMBLY INSTRUCTIONS

The Model TP0412A ThermoStream System is complete as shipped with most or all of the interconnections made. Depending on the particular system configuration, however, some assembly will be necessary. (see pages 3-2 and 3-3, drawings D4053 and D4247). Refer to the appropriate appendices for assembly, interconnection, and operation instructions of any supplied options or accessories.

3-2 INTERCONNECTIONS

Interconnecting of the Model TP0412A ThermoStream System is a routine procedure wherein the supplied cables and hoses are merely attached to their mating connectors.

The electrical connections may be made in any sequence however, it is recommended that the system main power connection be made last. All power connections are keyed and the appropriate mating connectors should be easily inserted. The thermocouple receptacles are polarized and if forced may be incorrectly mated.

The gas/air connections should be made at this time prior to turning the system on. The necessary pressure and flow regulation should be adjusted with the system operating (see Section 3-5).

3-3 OPERATING FEATURES

The following describes the switches, controls, and indicators associated with the operation of the TP0412A ThermoStream System.

REVISIONS				
ZONE	LTR	DESCRIPTION	DATE	APPROVED
	T	ECN 4053T	8-20-86	[illegible]
	U	ECN 4053U [illegible]	3-26-87	[illegible]

REV	ECN NO	DATE
H	2607	
J	2624	
K	2636	
L	2742	
M	2812	
N	2821	
P	2887	12/85
Q	2992	3/86
R	3058	5/86
S	3032	6/86
T	4053-T	

CABLE CONNECTIONS		
LTR	TEMP.STOCK NO.& DESCRIPTION	ITEM NO.
A	SA3621-1, EXT.CONTROL	4
B	SA3896-1, T.C.INTERCONECT	5
C	SA3990-2, POWER CABLE	6
D	POWER CORD	REF
E	OPTIONAL STAND CONNECTOR	REF
F	OPTIONAL DRYER CONNECTOR	REF

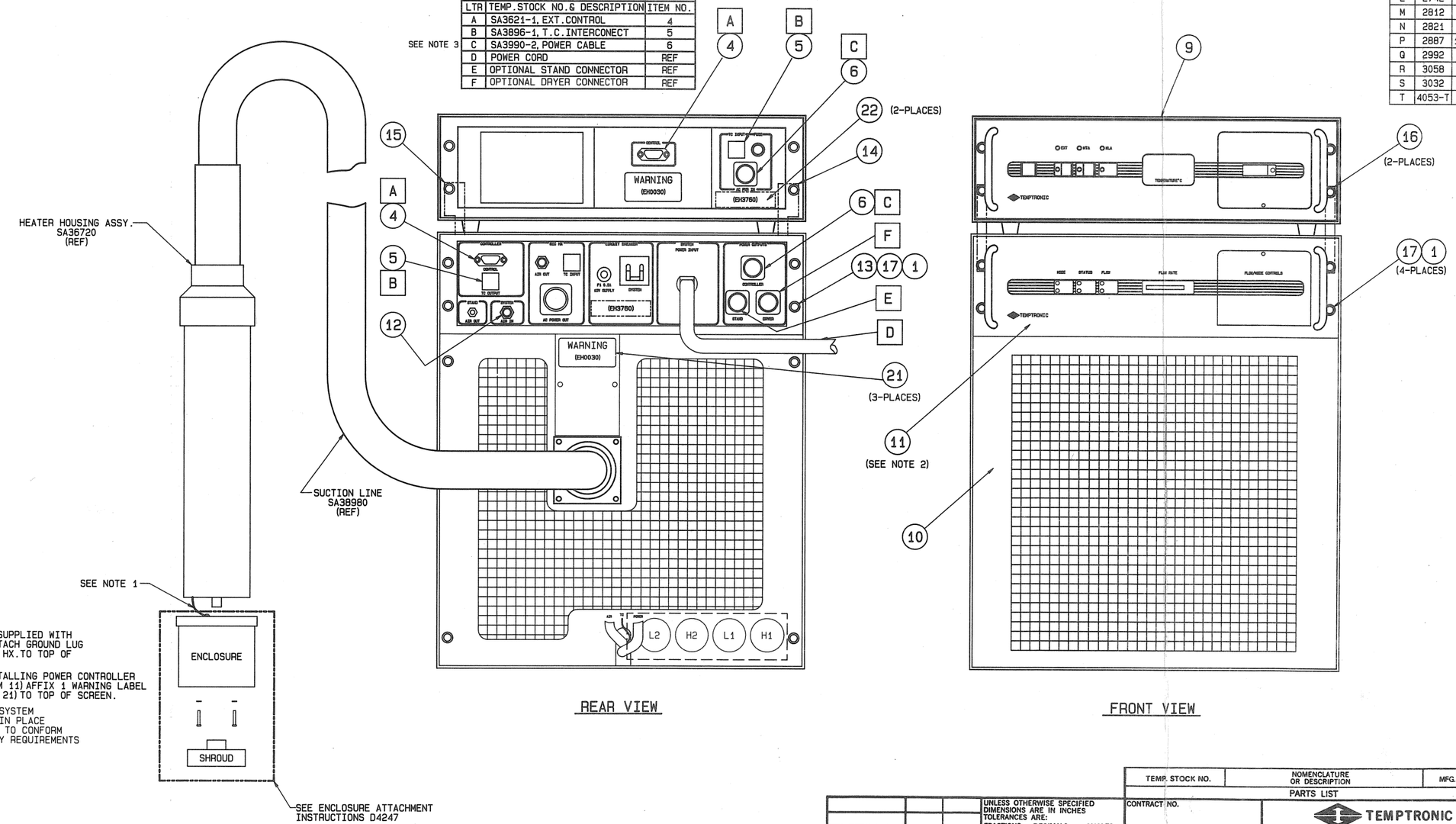

NOTE:

1. USING SCREW SUPPLIED WITH ENCLOSURE ATTACH GROUND LUG FROM PRIMARY HX.TO TOP OF ENCLOSURE.
2. PRIOR TO INSTALLING POWER CONTROLLER (TPC3907-ITEM 11) AFFIX 1 WARNING LABEL (EH0030-ITEM 21) TO TOP OF SCREEN.
3. TP0412A IBM SYSTEM HAS SA43962 IN PLACE OF SA39902 , TO CONFORM TO IBM SAFETY REQUIREMENTS

TEMP. STOCK NO.	NOMENCLATURE OR DESCRIPTION	MFG. PART NO.	ITEM

PARTS LIST

NEXT ASSY	USED ON	SYSTEM
SECTION 3	LMS1360	TP0412A

APPLICATION

UNLESS OTHERWISE SPECIFIED DIMENSIONS ARE IN INCHES TOLERANCES ARE: FRACTIONS ± 1/64 DECIMALS .XX ± .01 .XXX ± .005 ANGLES ± 30'

MATERIAL

FINISH

DO NOT SCALE DRAWING

CONTRACT NO.

APPROVALS	DATE
DRAWN J. WOODMAN	8-20-86
CHECKED	
ENG	

UNLESS OTHERWISE SPECIFIED RESISTANCE VALUES ARE IN OHMS ± % WATT CAPACITANCE VALUES ARE IN ± % VOLTS

TEMPTRONIC CORP.

SYSTEM TOP ASSY.

SIZE	CODE IDENT NO.	DRAWING NO.	REV
D		4053	U

SCALE NA SHEET 1 OF 1

FOTOBEAM/BROOKSIDE 0225-D

REVISIONS				
ZONE	LTR	DESCRIPTION	DATE	APPROVED
	B	ECN 2607	1-10-85	[illegible]

NOTES:

1. MAKE SURE HEATER HOUSING IS SECURE IN STAND HEAD, SYSTEM IS UNPLUGGED AND AIR DISCONNECTED.
2. TILT STAND HEAD LEFT OR RIGHT 90° AND SECURE IN THIS POSITION
3. ATTACH GROUND LEAD TO TOP OF SHAFT WITH SCREW SUPPLIED WITH ENCLOSURE.
4. POSITION ENCLOSURE ON END OF HEATER HOUSING *TAKE CARE THAT GROUND WIRE MOVES UP INTO HEATER HOUSING AND DOES NOT GET PINCHED, RECOMMEND ENCLOSURE BE POSITIONED SO THAT VENT HOLE OR VENT LINE IS TO EITHER SIDE OR TO REAR AWAY FROM OPERATOR.
5. ALIGN 2-THRU HOLES IN ENCLOSURE WITH 2-HEATER HOUSING HOLES SELECTED.
6. INSERT #6-32 SCREWS WITH WASHERS SUPPLIED, THRU ENCLOSURE AND INTO MOUNTING HOLES IN HEATER HOUSING AND TIGHTEN.
7. PUSH DESIRED SILICONE RUBBER SHROUD OVER AIR STREAM NOZZLE AS SHOWN.
8. FOR DOUBLE WALL ENCLOSURES ONLY ZAK4254-4" ZAK4248-6".
   a. REMOVE SEAL PLUG FROM STAND FITTING.
   b. INSTALL 1/16 BARB FITTING SUPPLIED, INTO STAND FITTING.
   c. ATTACH DOUBLE WALL ENCLOSURE AIR LINE SUPPLIED, BETWEEN STAND FITTING AND ENCLOSURE FITTING.
   d. INSERT EXHAUST TUBE ASSY. INTO ENCLOSURE AS SHOWN, MAKE SURE VENT LINE IS ALL THE WAY IN AND FULLY SEATED.

* AIR LEAKAGE CAN OCCUR IF GOOD SEAL NOT MADE.

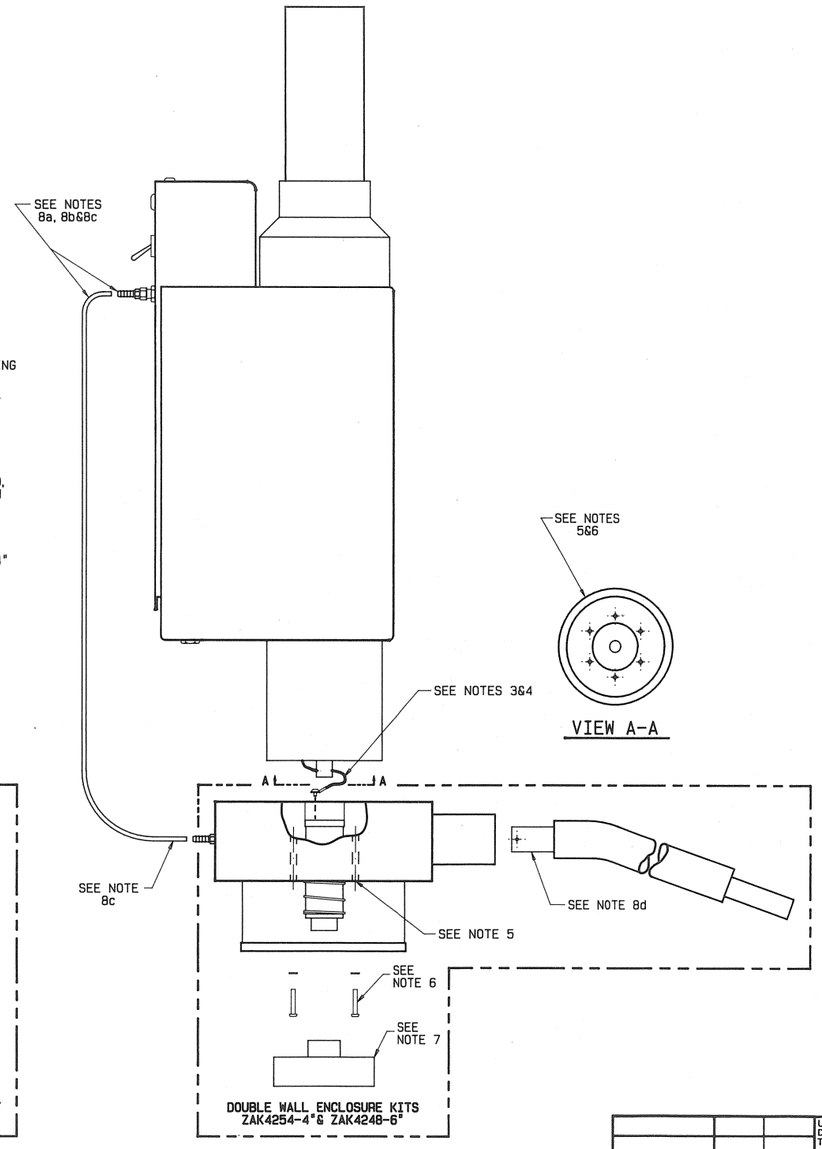

SINGLE WALL ENCLOSURE KIT ZAK4255

DOUBLE WALL ENCLOSURE KITS ZAK4254-4"& ZAK4248-6"

NEXT ASSY	USED ON	SYSTEM
Section 3	LMS1360	TP0412A
ZAK4255	-//-	TP0412A
ZAK4254	-//-	TP0412A
ZAK4248	-//-	TP0412A

APPLICATION

UNLESS OTHERWISE SPECIFIED DIMENSIONS ARE IN INCHES TOLERANCES ARE:
FRACTIONS ± 1/64 DECIMALS .XX ± .01 .XXX ± .005 ANGLES ± 30'

MATERIAL

FINISH

DO NOT SCALE DRAWING

TEMP. STOCK NO.	NOMENCLATURE OR DESCRIPTION	MFG. PART NO.	ITEM

PARTS LIST

CONTRACT NO.

APPROVALS	DATE
DRAWN J WOODMAN	8-15-84
CHECKED	
ENG	

UNLESS OTHERWISE SPECIFIED RESISTANCE VALUES ARE IN OHMS ± % WATT CAPACITANCE VALUES ARE IN ± % VOLTS

TEMPTRONIC CORP.

ENCLOSURE ATTACHMENT ASSEMBLY (LMS1140)

SIZE	CODE IDENT NO.	DRAWING NO.	REV
D		4247	B

SCALE 1/2 SHEET 1 OF 1

FOTOBEAM/BROOKSIDE 0228-D

3-3.1 Microprocessor Controller (front panel)

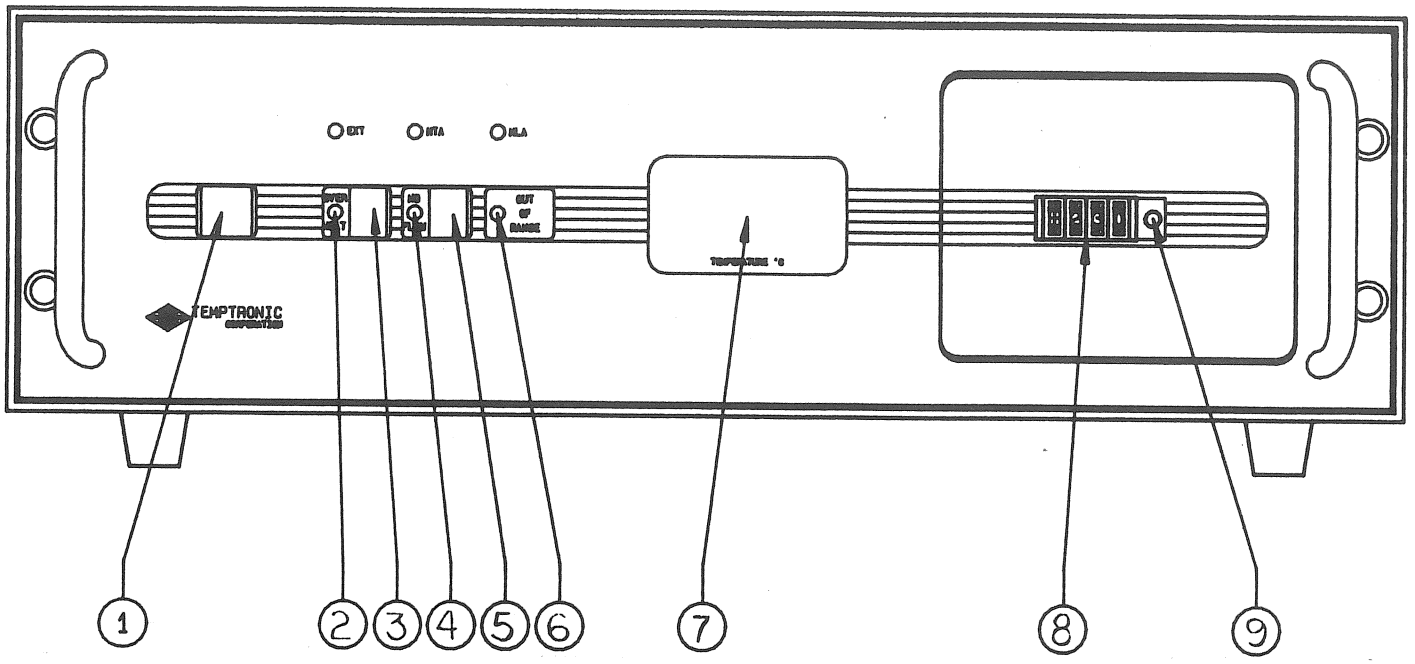

Figure 3-1. Microprocessor Controller Front Panel.

Item	Designation	Function	Explanation
1	POWER switch	Controls and indicates on/off application of ac power to the system. When "on", the switch indicates green.	A pushbutton switch used to power up/down system. When depressed to power up the system, it initiates a timed start-up sequence, the duration of which is dependant of the Mode selected. During this sequence all input and output functions are disabled.
2	OVERHEAT LED-indicator	Provides red warning indication when gas stream temperature exiting the Heater Housing Assembly exceeds the factory-set upper operating limit.	Latched on when applied temperature upper limit is exceeded. Power to the heating function is off when this indicator is on. This indicator is also used in conjunction with other indicators when utilizing the -980 and -990 code series.

Item	Designation	Function	Explanation
3	RESET switch	Returns temperature control to the microprocessor controller and to the front panel mode; also used in conjunction with the FLOW switch to initiate -980 and -990 code series.	Pushbutton type switch which when depressed allows power to be restored to the heating circuit after correction of an overheat condition. This switch is also used to clear all other conditions. Whenever depressed the gas flow will be stopped. When depressed and released while the FLOW switch is depressed will initiate the -980 and -990 codes series.
4	NO FLOW LED-indicator	Provides red warning indication when gas flow is below 1 L/sec (2SCFM) threshold level.	Latched on when gas flow is interrupted or diminished below threshold rate. Power to the heating circuit is off when this indicator is on. Flashing when low flow error is detected.
5	FLOW switch	Allows gas flow to be turned on or off at any time.	Pushbutton type switch when depressed energizes 1 of 2 gas flow control solenoids located in the POWER CONTROLLER. Also is used in conjunction with the OVERHEAT RESET switch to initiate the -980 and -990 code series.
6	OUT OF RANGE LED-indicator	Provides red warning indication when the requested temperature is outside preset limits.	When on, the requested temperature is outside the upper or lower limits. The system will however try to achieve the desired temperature unless interrupted. To clear this condition simply request a temperature within the system limits.

Item	Designation	Function	Explanation
7	TEMPERATURE meter	Digitally displays the gas stream temperature in degrees Celsius.	Provides a 3 digit and polarity read-out of the gas stream temperature with 1°C resolution, and also supplies displayed information to the temperature control circuit.
8	TEMPERATURE SET switch	Allows a polarity and 3 digit temperature setting to be entered using 4 pushbutton switches. Also used to enter -980 & -990 Codes.	Provides both a read-out of the manually set temperature and supplies this information in BCD to the temperature control circuit. A single switch is standard, but a multiple switch option is available for convenient setting of 5 temperatures to enable frequently used temperatures to be readily addressed.
9	AT TEMP LED-indicator (one per set switch)	Indicates if gas stream temperature is in transition or controlling at the set temperature.	Flashes red during temperature transition and latches on when stream temperature is within ±2°C of the set temperature and/or after the preset "soak" time has elasped.

3-3.2 Microprocessor Controller (back panel)

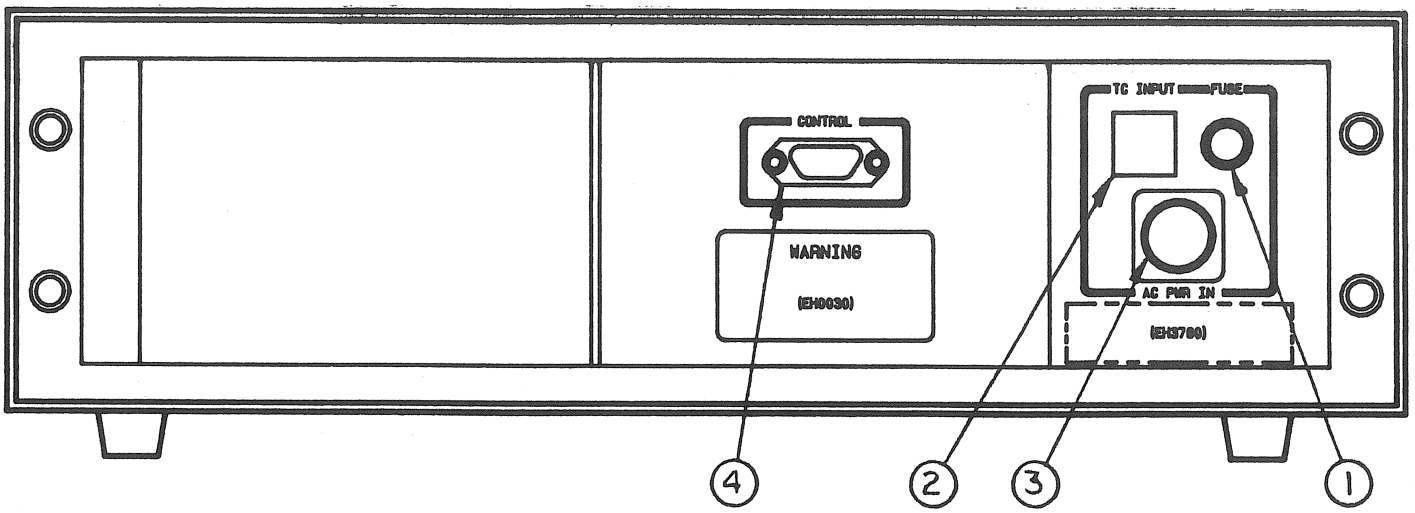

Figure 3-2. Microprocessor Controller Back Panel.

Item	Designation	Function	Explanation
1	FUSE	Protects both the system and operator.	A fast-blow type carefully selected to allow normal system operation.
2	THERMOCOUPLE receptacle	Provides input port for controlling thermocouple.	Allows temperature sensor to input to the TEMPERATURE meter thus ultimately to the temperature control circuit.
3	POWER receptacle	Provides input port for line voltage.	Allows ac power from power controller to connect to the microprocessor controller and its power switch.
4	INTERFACE CABLE receptacle	Links microprocessor controller to the power controller.	Provides interconnections between microprocessor controller and power controller enabling the microprocessor to control the power functions.

3-3.2.1 Microprocessor Controller Options (front panel)

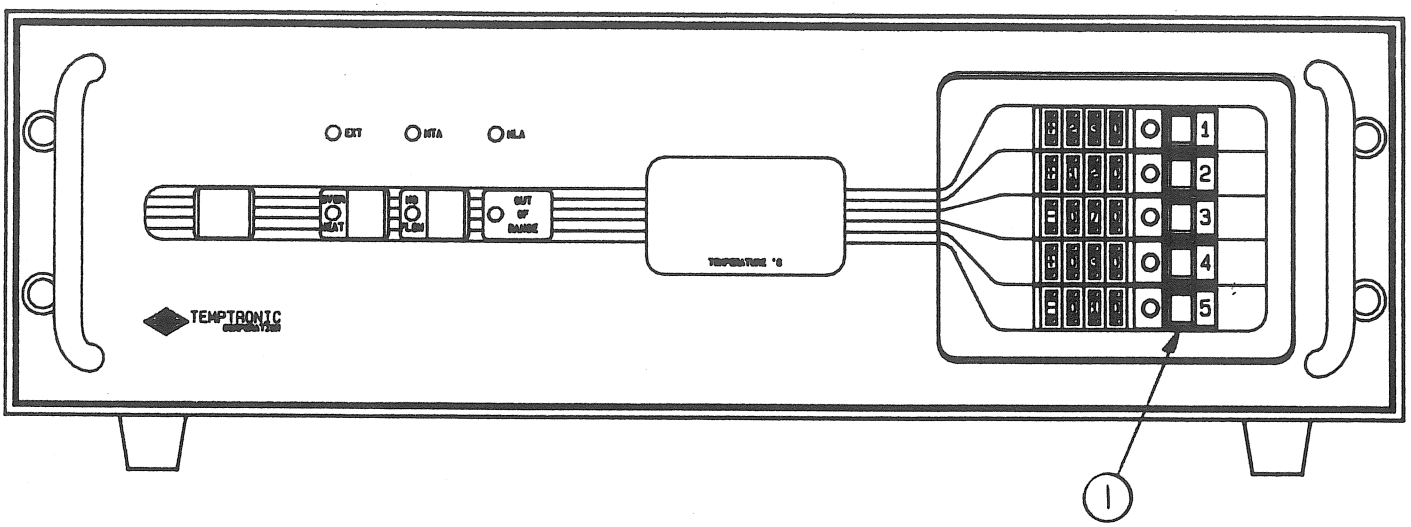

Figure 3-3. Microprocessor Controller Front Panel Options.

Item	Designation	Function	Explanation
1	TEMPERATURE SET SELECT switch (only supplied with multiple set switch)	Selects a specific TEMPERATURE SET switch.	A separate pushbutton switch is supplied with each TEMPERATURE SET switch. When depressed selects corresponding switch allowing the indicated temperature to be inputted to the temperature control circuit.

3-3.2.2 Microprocessor Controller Options (back panel)

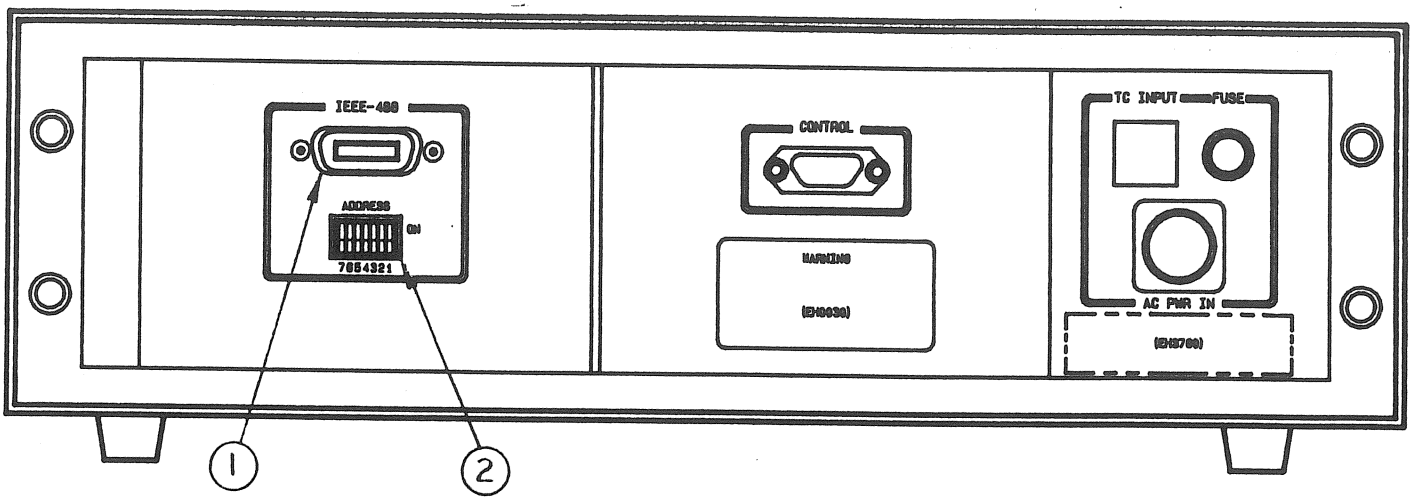

Figure 3-4. Microprocessor Controller Back Panel Options.

Item	Designation	Function	Explanation
1	IEEE-488 I/O	Enables external interfacing with automated testers.	Allows microprocessor controller to communicate with external devices over the IEEE-488 bus.
2	Address switch	Sets the system address	Allows the system to be identified on a bus with several devices. Switch setting is set only during the power up sequence.
3	BCD I/O (not shown)	Enables external interfacing with automated testers.	Allows microprocessor controller to communicate with external devices using BCD format.

3-3.4 Power Controller (front panel)

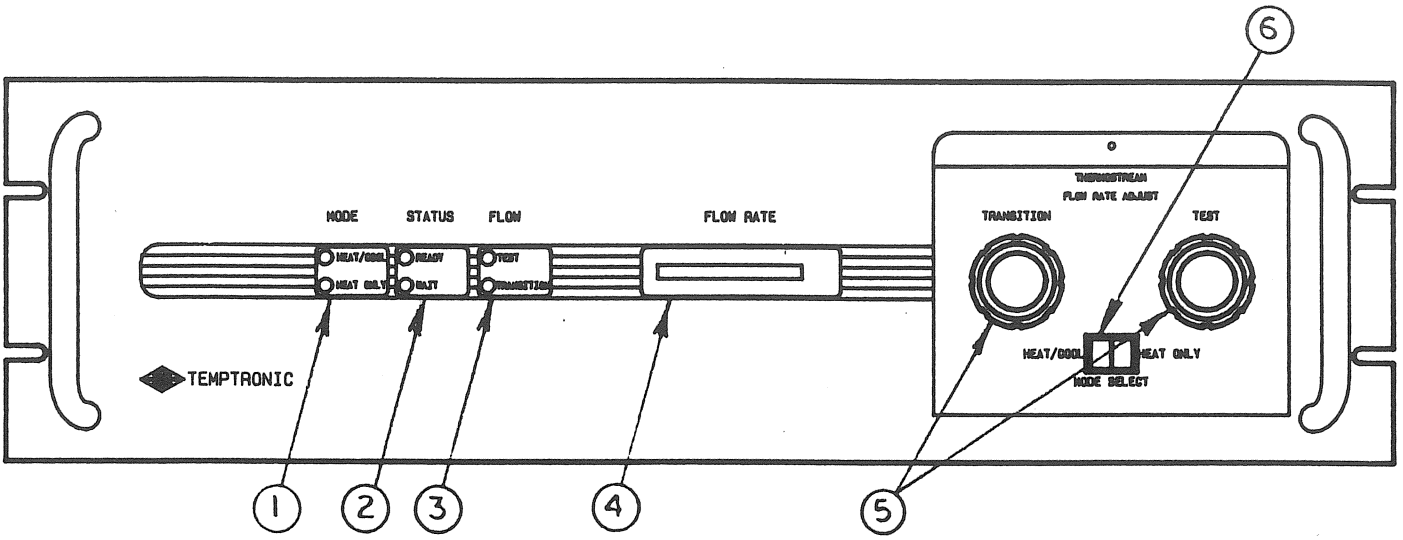

Figure 3-5. Power Controller Front Panel.

Item	Designation	Function	Explanation
1	MODE indicators	Indicates when the compressors of the secondary heat exchanger are on or off.	These indicators function in conjunction with the MODE switch. One of the 2 red LEDs will be illuminated to indicate if the refrigeration system is required for HEAT/COOL operation or if off for HEAT only.
2	STATUS indicators	Indicates the system availability.	Two red LEDs are associated with this feature. One gives a "WAIT" indication when HEAT/COOL mode is selected but the refrigeration system is not fully ready for operation. The other indicates when all are "READY".

Item	Designation	Function	Explanation
3	FLOW indicators	Indicates which flow valve(s) is controlling the gas flow at any time.	Two red LEDs are associated with this feature. They indicate the state of the TRANSISTION & TEST Valves (flow channels). Valve selection is made by the microprocessor depending on operator choice (Sections 3-8.4 & B-8.10). System default at power up is TRANSITION on when making a temperature excursion and switching to TEST when temperature is within ±2°C of the SET TEMPERATURE.
4	FLOW meter	Indicates gas flow in both CFM and L/sec.	This device is a mass flow meter. The LED-bar indicator is capable of indicating a flow rate from 2 to 12 standard cubic feet per minute (SCFM) or from 1 to 5 liters per second (L/sec).
5	GAS FLOW valves (behind hinged panel)	Provides 2 gas flow settings, each able to set from 2 to 12 SCFM or 1 to 5 L/sec. (Left...Transition Right...Test).	Allows manual adjustment of the gas flow to optimize the system operation for each requirement. This feature improves through-put while minimizing gas usage and operating noise.
6	MODE switch (behind hinged panel)	Provides manual selection of heat-and-cool or heat only operation.	This rocker switch allows the refrigeration system to be turned off for power conservation and noise reduction when no cooling will be required for extended periods.

3-3.5 Power Cont roller (back panel)

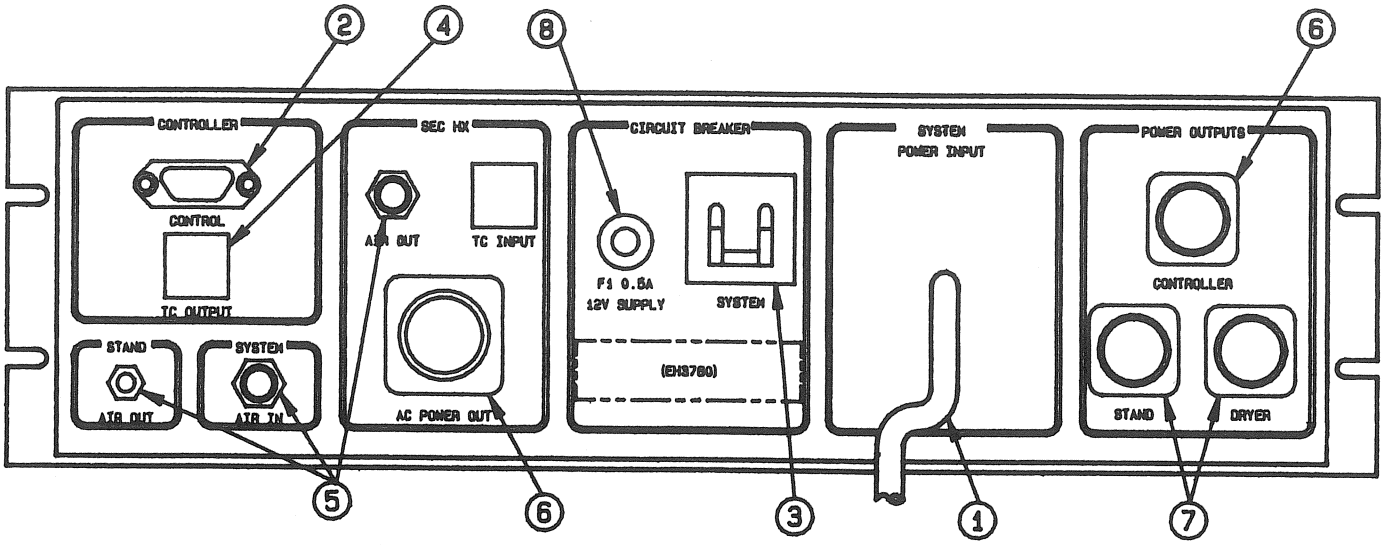

Figure 3-6. Power Controller Back Panel.

Item	Designation	Function	Explanation
1	POWER cord	Provides input for system power.	Connects ac power to the power controller and the system.
2	INTERFACE CABLE receptacle	Links power controller to microprocessor controller.	Allows the power controller functions to be controlled by the microprocessor controller.
3	CIRCUIT BREAKER	Protects entire system.	Will open circuit the ac power to the system when the current draw exceeds 25 amps, it is manually resettable when the problem has been remedied.
4	THERMOCOUPLE receptacles (two provided)	Accepts leads from the controlling thermocouple (T/C) and the microprocessor T/C interconnect cable.	The 2 receptacles are thermocouple feed throughs for the controlling T/C to the microprocessor.

Item	Designation	Function	Explanation
5	GAS barbed fittings (three provided)	Provides ports for gas input and output. Air in: $^3/_8$" Air out: $^3/_8$" Stand air: $^1/_4$"	Allows gas supply to be connected to the system for regulation and distribution to the heater housing assembly, ThermoCap and/or optional stand.
6	AC POWER ms connectors (two provided)	Provide AC power distribution.	Connects ac power to the microprocessor controller, secondary and primary heat exchangers.
7	DC POWER ms connectors (two provided)	Provide DC power distribution.	Connects dc power to the optional stand and gas dryer.
8	FUSE (.5 amps. slow blow)	Protect 12vdc power supply	Device to protect the 12vdc power supply which drives the optional stand and air dryer from experiencing excessive heat.

3-3.6 Primary Heat Exchanger (heater housing assembly)

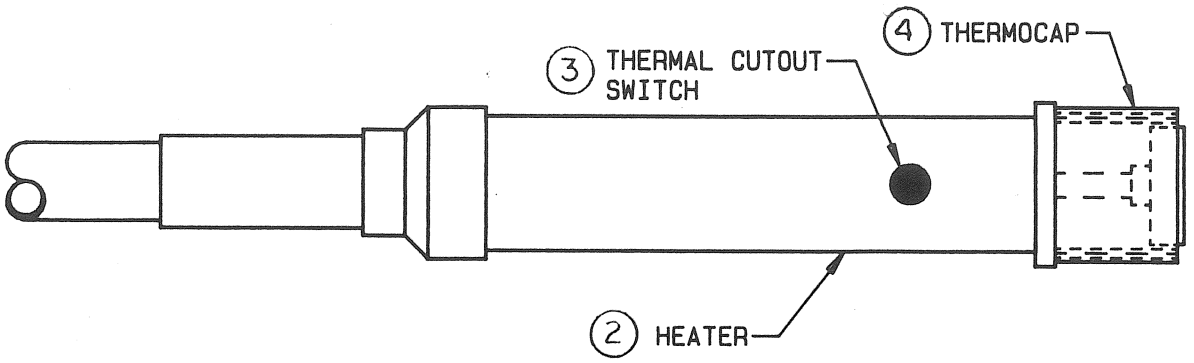

Figure 3-7. Primary Heat Exchanger (WAND).

Item	Designation	Function	Explanation
1	THERMOCOUPLE (not shown)	Senses gas temperature.	Allows accurate sensing of gas stream temperature. A single junction type "T" (copper-constantan) couple is used for the entire temperature range. The T/C junction is located as close as practical to the DUT.
2	HEATER	Conditions gas stream to the desired temperature.	A resistive type heater is housed in the primary heat exchanger and is powered when the gas temperature is below the desired (set) temperature.

Item	Designation	Function	Explanation
3	THERMAL CUTOUT switch	Protects the primary heat exchanger from a thermal run-a-way condition should the NO FLOW indicator circuit fail or the heater temperature should rise above safe limits for any reason whatever.	This is a self resettable bi-metal temperature sensitive switch which is mounted in the primary to sense the heater case temperature. It is wired in series with the heater so if the heater should ever become powered when there is no gas flow, this switch will open thus removing power to the heater.
4	THERMOCAP (recommended option)	Provides thermal coupling to the DUT.	Recommended option which attaches to the end of the primary heat exchange to create a close coupling of the controlled temperature gas to the DUT. In the case of the double wall THERMOCAPS, condensation is greatly reduced to the point where it can be considered eliminated.

3-3.7 Secondary Heat Exchanger (refrigeration system)

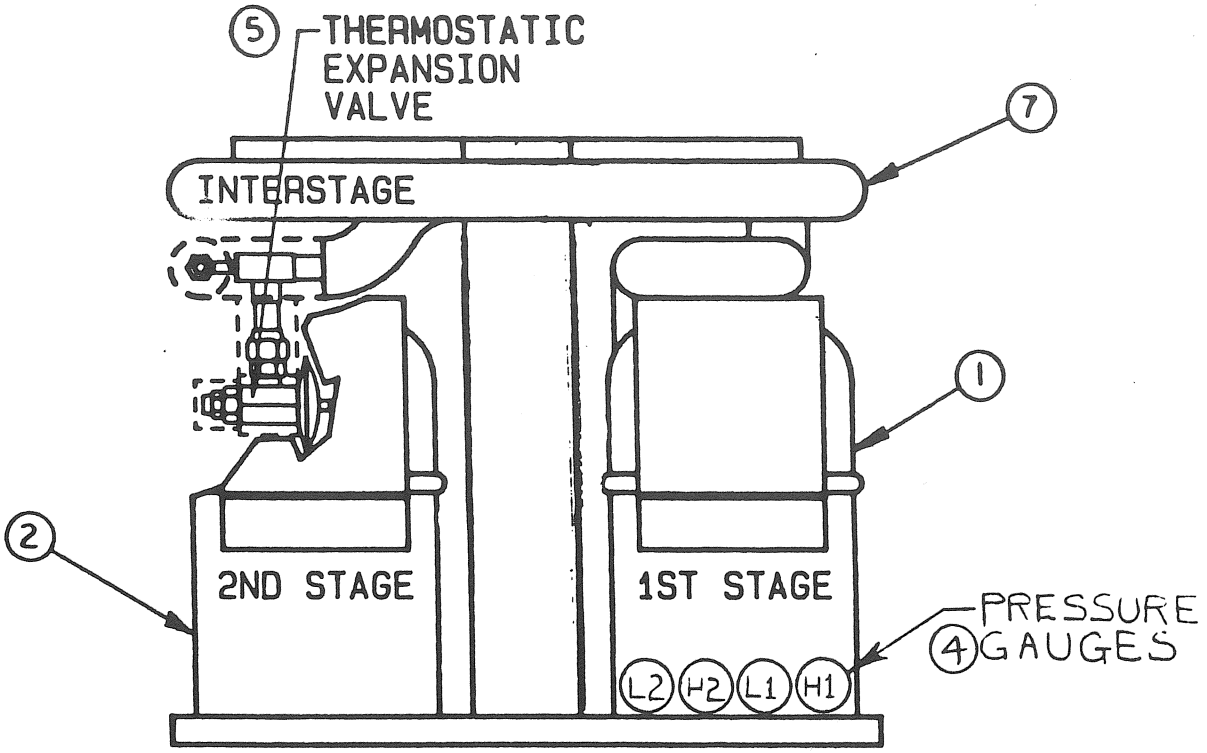

Figure 3-8. Secondary Heat Exchanger.

Item	Designation	Function	Explanation
1	FIRST STAGE	High temperature compressor stage which cools the low (second) temperature stage.	This is a self-contained closed-loop refrigeration system which is used to cool the second stage.
2	SECOND STAGE	Low temperature compressor stage which cools the gas stream.	This is a self-contained closed-loop refrigeration system which cools the gas stream as it passes through the suction line evaporator. The compressor for this stage does not start until 5 minutes after the first stage compressor has.
3	DISTRIBUTED EVAPORATOR [Suction line] (not shown)	Connects the primary and secondary heat exchangers, provides second stage evaporator, and houses all electrical wires to the primary.	This is a flexible hose assembly between the secondary and primary heat exchangers which affords an efficient means of removing heat from the gas stream and versatility when interfacing to testers.

Item	Designation	Function	Explanation
4	PRESSURE GAUGES (4 provided)	Indicates the suction and discharge pressures of each refrigeration stage.	One low pressure and one high pressure gauge have been integrated into each refrigeration stage. These gauges are intended to provide a visual means of verifying the operation of each stage. They are mounted such that they are visible through the rear screen.
5	THERMOSTATIC EXPANSION VALVE (TEV)	Senses load on refrigeration system then meters refrigerant to compensate.	This device is incorporated in the first stage refrigeration system. It senses demand on the system by sensing the suction line super heat temperature.
6	THERMOCOUPLE [2 provided] (not shown)	Sense interstage temperature.	Two (2) type "T" thermocouples are permanently (1 to each stage) mounted to the cascade refrigeration system. Their purpose is to allow monitoring of the system when trouble-shooting a suspected refrigeration problem.
7	INTERSTAGE	Serve as 1st stage evaporator and 2nd stage condensor allowing 2nd stage refrigerant (R170) to be condensed.	The purpose of this assembly is to allow the 1st stage refrigeration system to remove heat from the 2nd stage refrigeration system. It is a tube within a tube construction.

3-4 SYSTEM OPERATION

Upon power-up, prior to the purge cycle, the microprocessor performs a self diagnostic routine and interrogates both the temperature control and flow circuits for an OFF condition. If an error is detected it will be displayed (see Section 3-5) on the temperature controller front panel. The "WAIT" indication is given during the power-up and purge sequences.

A 90 second purge cycle will be initiated if no error was detected. This routine requires the recommended 65psig. dry gas source be available to the system. Both the TRANSITION and TEST solenoids (K8 & K9 schematic designations) are open at this time. The FLOW METER indication (may be off scale) will be the combined GAS FLOW valve settings.

If the system is configured with the optional stand the HEAD (Heater Housing Assembly) will raise and the purge air is exhausted to ambient. Once the system is "READY" the flow will automatically be stopped when the HEAD is raised and initiated when lowered. FLOW can be initiated (if desired) when the HEAD is raised by either depressing the FLOW switch or by sending the appropriate IEEE-488 command (see Appendix B-8).

The total time delay (as timed by the microprocessor) before obtaining a "READY" status depends on the MODE switch position, approximately 2 minutes for Heat Only and 10 minutes for Heat/Cool. The system functions are available only after obtaining a "READY" status.

During local/manual operation the desired test temperature is input by means of front panel pushbutton switches. The lamp adjacent to the selected TEMPERATURE SET switch blinks until the SET TEMPERATURE is reached (±2°C of SET TEMPERATURE) after which the lamp stays lit continuously ("AT TEMP" indication). When the system reaches 2°C of the SET TEMPERATURE a 2.5 second

delay is initiated, before the "AT TEMP" indication is given, to allow the system to stabilize as the result of any transients caused by switching of flow rates. This non-adjustable time delay should not be confused with the SOAK TIME routine (-986) mentioned in Section 3-8. If the system is configured for either IEEE-488 or BCD operation refer to the appropriate appendix.

The gas temperature is sensed by means of a type "T" thermocouple (copper-constantan) located very close to the output end of the heater nozzle. The temperature controller compares the SET TEMPERATURE setting against the actual gas temperature and regulates the heater power circuit to bring the two into conformance. The sensed temperature is displayed on the microprocessor controller front panel.

The testing environment is achieved by first cooling, if the heat-and-cool mode has been selected, the dry gas-stream with the secondary heat exchanger, then heating the stream to the desired temperature in the primary heat exchanger.

The manual flow adjustments housed in the power controller allows separate flow rate settings (2 to 10 SCFM) on either channel. The flow indicator will indicate the flow of the active channel.

Upon initial power on the FLOW MODE defaults (is set) to the Automatic mode. In this mode a preset maximum flow rate (TRANSITION) can be selected and supplied until the desired temperature is reached, then the stream flow, after the temperature is within 2°C of the SET TEMPERATURE and any pre-programmed time delay (SOAK TIME, see Section 3-8), will automatically switch to another preset rate (TEST), the same as or lower than the TRANSITION rate, depending on the application and the interest in conserving gas flow or reducing ambient noise.

Four (4) different FLOW MODES are possible as outlined in Section 3-8 (see Appendix B-8 if IEEE-488 option is installed).

A recommended optional Thermal Cap or equivalent and various size enclosures, which attach to the end of the primary heat exchanger, interface to the tester and DUT to form an effective environmental test compartment.

Refer to Section 4 for a further discussion of the system operation.

3-5 SYSTEM FUNCTIONAL CHECKOUT

The following procedure should be performed to verify system operation before placing the Model TP0412A ThermoStream System in use and interfaced to the tester.

1 Verify all electrical and gas connections are as outlined in Section 3-2 including main power connection and input gas.

2 Set +25°C on the microprocessor controller TEMPERATURE SET switch (middle switch if configured with 5 TEMPERATURE SET option).

3 Switch the power controller MODE SELECT switch, located behind the hinged panel, to the HEAT/COOL position. Refer to Section 3-3.4 item 6 for an explanation of this switch.

4 Initiate power by depressing the microprocessor controller POWER switch. If certain error conditions are present at power-up the system will hang-up and one of the following lamp displays will be observed.

CONDITION	OVER HEAT INDICATOR	NO FLOW INDICATOR	OUT OF RANGE INDICATOR
J1-P8, J1-P13 & J1-P17 not at logic zero (0)	OFF	OFF	ON
Safety return reads safe when it should read unsafe	OFF	ON	OFF
Flow detected when valves should be closed. (Bar graph LED(s) usually lit also)	OFF	ON	ON
ROM U6 checksum error	OFF	ON	OFF
ROM U13 checksum error	OFF	ON	ON
ROM U8 checksum error	ON	OFF	OFF

NOTE

These tests are made in the sequence as listed. If any of the conditions are observed power down the system then apply power again. If condition persist contact the factory.

5 Both TEST and TRANSITION valves will open to allow a 90 second gas purge of the system. The purge will be initiated if there are no error conditions and the appropriate air/gas supply (at least 2SCFM) is available to the system.

A flashing FLOW lamp indicates a lack of gas flow. Regulate the system input gas supply to 65 psig. (recommended input to the optional Air Dryer is 100 psig. [Appendix B-2]).

If the system is configured with the optional stand the HEAD (Heater Housing Assembly) will automatically raise as soon as the purge is initiated.

6 The TEMPERATURE meter will indicate some temperature (usually ambient). Simultaneously the "AT TEMP" indicator (#3 on the 5 Temperature Select Module), refer to Section 3-3.1 item 9, will become active.

7 Observe the power controller STATUS indicator. A "WAIT" indication should be given at this time. Ten (10) minutes after power-up this indicator should go out and the "READY" lamp comes on signifying the system is now operational.

8 At power on the system defaults to;

- a "SOAK TIME" of zero (0) seconds
- a control-constant for a 40 pin plastic device (Applicable only if DUT option is installed.)
- the air temperature range limits of -70°C and +205°C (The system has a temperature range specification of -70°C to +200°C. However, the upper limit has been programmed to 205°C to permit the system to deliver sufficient temperature to bring a large device to +200°C.)

To change these constants refer to Sections 3-8 or B-8.4.

9 Depress the FLOW switch to initiate flow. After the system has selected the TEST channel adjust the TEST valve until 3SCFM is indicated on the FLOW meter. Refer to Section 5-3.3 if flow calibration is required.

10 Change the SET TEMPERATURE on the functioning TEMPERATURE SET switch to -70°C and adjust the TRANSITION valve until 10SCFM is indicated on the FLOW meter. Observe that the flow channels will switch when the system reaches -68°C.

Loss in temperature may be experienced due to the change in load when the switching of channels occurs. However, the system should recover. The implementation of the "SOAK" routine and/or adjusting both FLOW channels so there is less of a change in the load will minimize this condition. Another solution would be to program the system to remain in one of the other 3 flow conditions (TEST only, TRANSITION only or both TRANSITION and TEST).

11 After the system has reached and is controlling at -70°C set -71°C on the functioning TEMPERATURE SET switch. Observe that the OUT OF RANGE indicator turns on and there is no change in flow conditions.

12 Set -81°C on the functioning TEMPERATURE SET switch. Observe that the system continues to control at -70°C and the AT TEMP indicator remains solid to indicate that the system is at the set control point. Refer to Section 3-8 (-985 routine) to change this limit if checking the refrigeration system ultimate low temperature is required.

13 Using the same TEMPERATURE SET switch set +205°C. Observe that the OUT OF RANGE indicator turns off, the system changes flow valves, when the temperature is +203°C the system changes flow valves and the AT TEMP indication is given.

14 Using the same TEMPERATURE SET switch set +206°C. Observe an OUT OF RANGE indication.

15 Using the same TEMPERATURE SET switch set +215°C. Observe that the system continues to control at +205°C and the AT TEMP indicator remains solid indicating that the system is at the set control point.

OPTIONAL STEPS

16 Momentarily unplug the thermocouple cable at the rear of the microprocessor controller. Observe the following;

a) Both TEST and TRANSITIONS valves open.
b) System begins cooling (heater is off). Approximately 10 seconds the flow will stop (NO FLOW indication).
c) OVERHEAT indicator is blinking (indicates a sense input error).

17 Reinstall the thermocouple cable (ensure proper polarity), depress the RESET switch.

18 Depress the FLOW switch to initiate flow and return to normal operation.

Checking the operation of the HEAT ONLY mode may be desired. To do so, place the MODE SELECT switch in the HEAT ONLY position, the compressors and fan will stop. Then set any temperature between +50°C and +205°C. The system should heat to the requested temperature and control there until another temperature is requested.

If the system is configured with the multiple (5) TEMPERATURE SET switch option, it may be desirable to check each SELECT switch, TEMPERATURE SET switch, and "AT TEMP" indicator for proper operation at this time. This can be done by selecting each TEMPERATURE SET switch in turn and observe if the system responds as expected to SET TEMPERATURES within the system operating range. Another method for verifying the multiple switch option is detailed in Section 6-3 routine -992.

If no malfunctions occurred during this procedure the system has been proven functional and ready for installation. It is not necessary to repeat this procedure each time the system is powered up. However, it may be desirable to repeat it whenever a problem is suspected.

The test site should be properly prepared in accordance to Appendix C-2 and the system should be operated as detailed in Sections 3-6 and 3-7. For convenience 2 hang tags imprinted with the same information is located in Appendix D. Remove 1 tag at this time and attach it to the temperature controller handle using 1 of the 2 tie wraps provided in the back of this manual.

For systems configured for IEEE-488 or BCD operation refer to Appendices B-8 or B-9 respectively for implementation.

3-6 SYSTEM START-UP

This procedure is recommended for system start-up once the initial set up, interfacing, and checkout have been successfully performed.

1. Verify all electrical and gas connections as outlined in Section 3-2.

2. Set +25°C on the TEMPERATURE SET switch (use the middle switch if the 5 TEMPERATURE SET option is installed).

3. Set the MODE SELECT switch to the desired position (Heat Only or Heat/Cool).

4. If convenient, note the refrigeration gauge readings to verify that there is pressure in the system. This especially applies if system is to be operated in the HEAT/COOL mode.

5. Initiate power by depressing the POWER switch.

6 Both TEST and TRANSITION valves will open to allow a 90 second gas purge and the HEAD will raise. The purge cycle will start ONLY when there is sufficient gas flow (minimum 2 SCFM). A flashing FLOW lamp indicates a lack of gas flow. After 90 seconds the purge will be complete and gas flow will stop.

Upon power-up the following constants are set;

- Temperature range limits of -70°C and +205°C
- Automatic valve switching
- "SOAK TIME" of zero (0) seconds
- DUT control-constant for a 40 pin plastic device (Applicable only if the DUT option is installed.)

To change any of these constants refer to Section 3-8.

7. Position the primary/Thermal Cap against an insulated surface during this procedure or whenever the system is operating but not interfaced to the tester. This will prevent either inadvertent operator contact with extreme temperature air or condensation inside the Thermal Cap during cold temperature operation.

8. If the OVERHEAT indicator lights, depress the RESET switch then the FLOW switch to initiate flow.

9. Wait for a system "READY" status indication then begin desired test functions.

3-7 SYSTEM SHUT-DOWN

The Model TP0412A ThermoStream System may be shut-down at anytime by depressing the system POWER switch on the front panel or throwing the system MAIN CIRCUIT BREAKER on the rear of the power controller. However, in the HEAT/COOL mode, the timed delay start-up sequence will be initiated during each start-up, so pre-mature shut-downs or shut-downs for brief time periods (less than 30 minute durations) should be avoided. During these periods, leave the system on with the gas flow switch off.

The following procedure is suggested for routine system shut-down.

1. Set +25°C on the TEMPERATURE SET switch which is initiated during system start-up.

2. Command the system to go to +25°C. Wait for an "AT TEMP" indication before depressing the POWER switch.

3-8 ADDITIONAL MICROPROCESSOR FUNCTIONS

The microprocessor has been programmed to permit several of the factory pre-programmed constants to be changed either from the front panel or over the IEEE-488 Bus if the option is installed.

The following list shows the codes and gives a brief explanation of each routine. Front panel implementation of these routines is given in subsequent sections, refer to Appendix B-8 for accessing using IEEE-488 format. Each modifying routine has been assigned a code which is input using the TEMPERATURE SET switch (command control switch) located in the yellow band of the rainbow. Six front panel indicator lamps are used to indicate which function is being modified.

Code	Function
-980	Device control set up for testing 40 pin plastic devices. This is slowest preset rate of temperature change.
-981	Device control set up for testing 40 pin ceramic devices.
-982	Device control set up for testing 14 pin plastic devices.
-983	Device control set up for testing 14 pin ceramic devices. This is fastest preset rate of temperature change.
-984	Sets system upper temperature limit and OUT OF RANGE indication.
-985	Sets system lower temperature limit and OUT OF RANGE indication.
-986	Sets "SOAK TIME" which defaults to zero (0) on power up.
-987	Used to select FLOW modes (4 possible).
-988	No function
-989	No function

It should be noted, that the information entered using these routines, is erased when the system is shut down. It may be desirable to leave the system powered and simply switch off the refrigeration and air system using the MODE and FLOW switches.

To return to the factory preset constants, either power down and restart the system following the start-up procedure or select the proper code and re-enter the original value.

3-8.1 -980 through -983 Routine

These routines are used to select predetermined control constants based on the type of device being tested. These routines will only be effective when the system is operated using the DUT Control Option.

For devices which do not fall into these 4 categories, select the routine which most closely describes the DUT's configuration.

To implement perform the following steps:

1. Select the TEMPERATURE SET switch located in the yellow band of the rainbow and set for -980, -981, -982, or -983.
2. While depressing the FLOW switch momentarily depress and release the RESET switch now release the FLOW switch. The cluster of 6 indicators on the microprocessor front panel should indicate as shown below.
3. Press the RESET switch. The new constant has been selected.

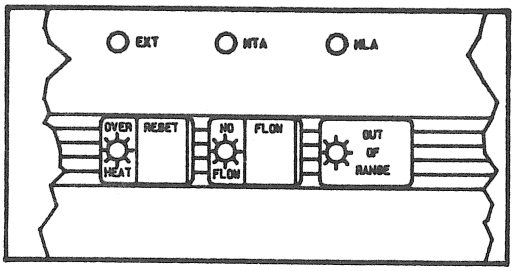

-980 selected

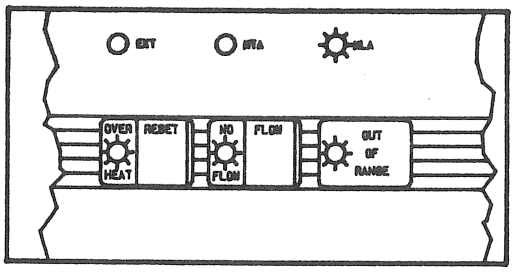

-981 selected

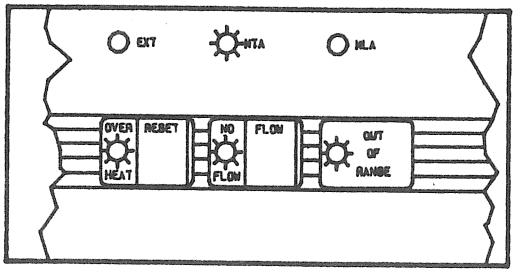

-982 selected

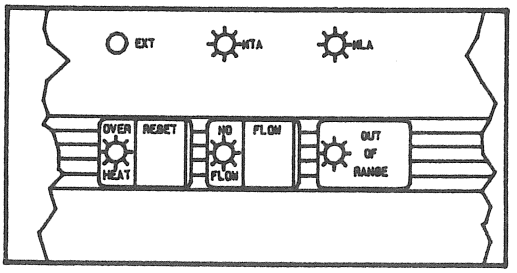

-983 selected

3-8.2 -984/-985 Routine

These routines permit the setting of a different upper and lower air temperature limit. Normally these limits should be within the system temperature specifications. An "Out of Range" indication will be generated if the SET TEMPERATURE is outside of these limits and the air temperature will not be allowed to exceed them. The system over heat circuit will prevent the air temperature from exceeding +211°C should an excessively high limit be entered.

To implement perform the following steps:

1. Select the TEMPERATURE SET switch (middle) and set for -984 upper or -985 lower.
2. Depress and hold the FLOW switch while momentarily depressing the RESET switch then release both switches.
3. Change the TEMPERATURE SET switch thumbwheels to the desired limit.
4. Press the RESET switch. The new limit is set.

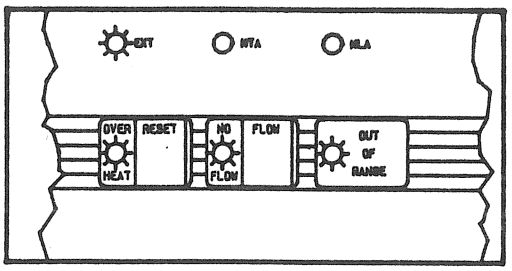

-984 selected

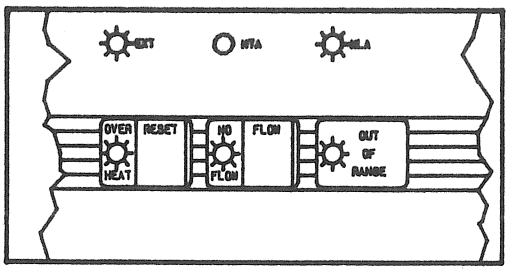

-985 selected

3-8.3 -986 Routine

This routine is used to set a "SOAK TIME" other than the system default value of zero 0 seconds (0 to 999 seconds is permitted). This time starts when the system reaches 2°C of the SET TEMPERATURE. During this time no AT TEMP indication or FLOW valve switching (if in Automatic mode) will occur.

"SOAK TIME" should not be confused with the programmed 2.5 second delay to damp transients due to valve switching associtated with the Automatic mode before the AT TEMP function is enabled.

To implement perform the following steps:

1. Set the TEMPERATURE SET switch (select the middle) to -986.
2. While depressing the FLOW switch depress the RESET switch and release both switches. The cluster of 6 indicators on the microprocessor front panel should indicate as shown below to indicate the routine is initiated.
3. Change the TEMPERATURE SET switch thumbwheels to the desired soak time, in seconds (the sign will be ignored).
4. Depressing the RESET switch will simultaneously enter the new "SOAK TIME" and end the routine.

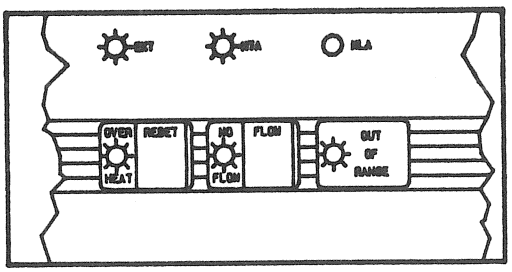

-986 selected

3-8.4 -987 Routine

This routine is used to select a FLOW mode other than the system default of Automatic mode. Automatic mode utilizes both valves; TRANSITION when making a temperature excursion and switching to TEST when the temperature is within 2°C of the SET TEMPERATURE.

To implement perform the following steps:

1. Select the TEMPERATURE SET switch located in the yellow band of the rainbow and set for -987.
2. While depressing the FLOW switch depress the RESET switch then release both switches. The cluster of 6 indicators on the microprocessor front panel should all be lit as shown below.
3. Change the TEMPERATURE SET switch thumbwheels to indicate the value for the desired mode (the sign will be ignored).

000.....TRANSITION/TEST (automatic switching - system default)
001.....TEST valve only
002.....TRANSITION valve only
003.....TRANSITION & TEST valve combined flow setting

4. Press the RESET switch. The new mode is set.

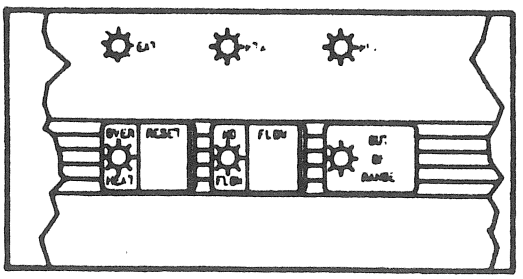

-987 SELECTED

SECTION 4
THEORY OF OPERATION

4-1 THERMOSTREAM® THEORY

Test objects are brought to and maintained at precise TEST temperatures by placing them in a controlled temperature gas stream. Heat is transferred to or from the TEST objects in this stream by forced gas convection.

The localized, high velocity, well controlled air surrounding the component and the TEST socket provides low temperature gradients across the DUT and small deviation between the temperature indicated on the thermal system and that of the DUT.

The accuracy, stability and repeatability of the DUT temperature as well as the temperature TRANSITION times between one TEST temperature and the next vary greatly depending on the quality and the type of thermal control technique used, and on the configuration of the DUT.

For simplicity and system reliability, ThermoStream® systems use reheat temperature control in an open loop configuration. A dry compressed gas with a dew point below the system temperature specifications is usually first refrigerated to a temperature lower than the lowest ThermoStream system specification temperature and then reheated to the desired control temperature. While at the control temperature, the gas is directed at the TEST object within a small enclosure (to enhance forced convection heat transfer) and then vented to the atmosphere. Refer to Figure 4-1 AirStream/DUT Block Diagram.

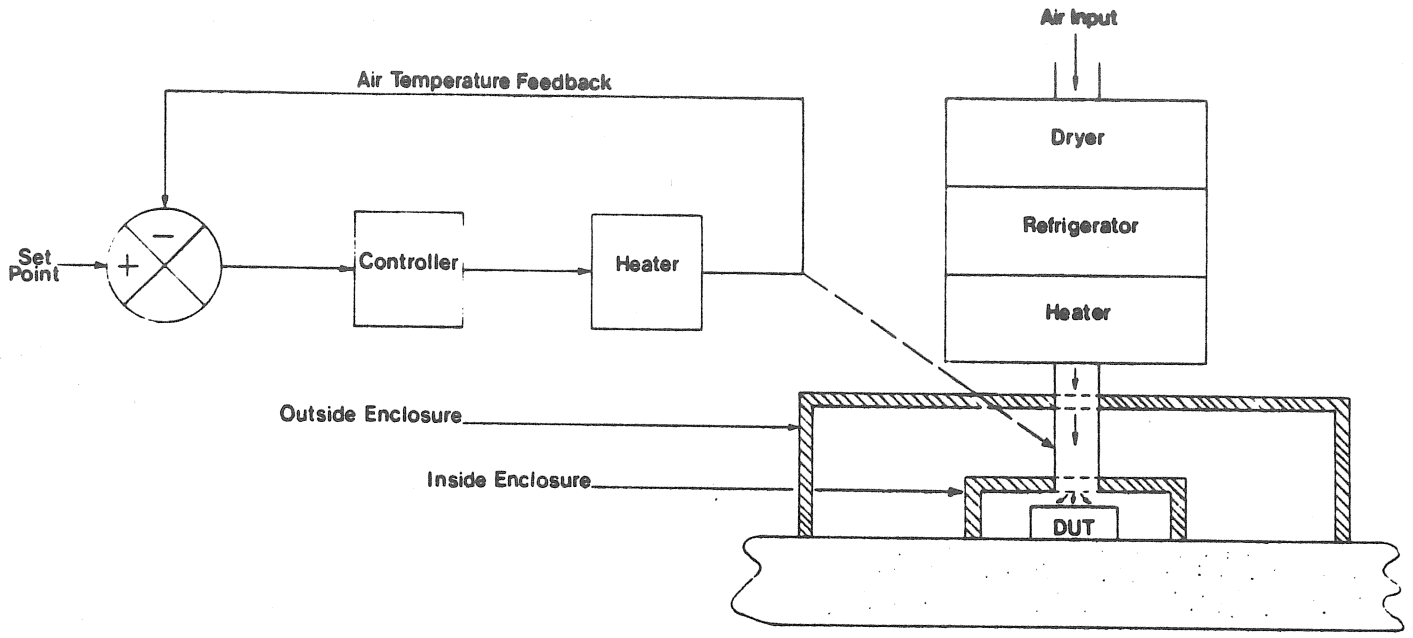

Figure 4-1. AirStream/DUT Block Diagram.

An electronic temperature controller is used to compare the user input set temperature with the actual gas stream temperature as sensed by a low mass thermocouple located near the TEST object. The temperature controller turns on an electrical resistance heater if the gas temperature is below the set temperature. Or, it turns the heater off if the gas temperature is above the set temperature.

4-2 SYSTEM FUNCTIONAL DESCRIPTION

The TP0412A ThermoStream® System is designed around a microprocessor system. This technology permits a larger variety of control possibilities, options, and is easier to manufacture and service than is feasible with hardware-oriented designs. Control features and options can be changed or added by making software modifications.

A system functional block diagram of the Model TP0412A ThermoStream System is shown in Figure 4-2.

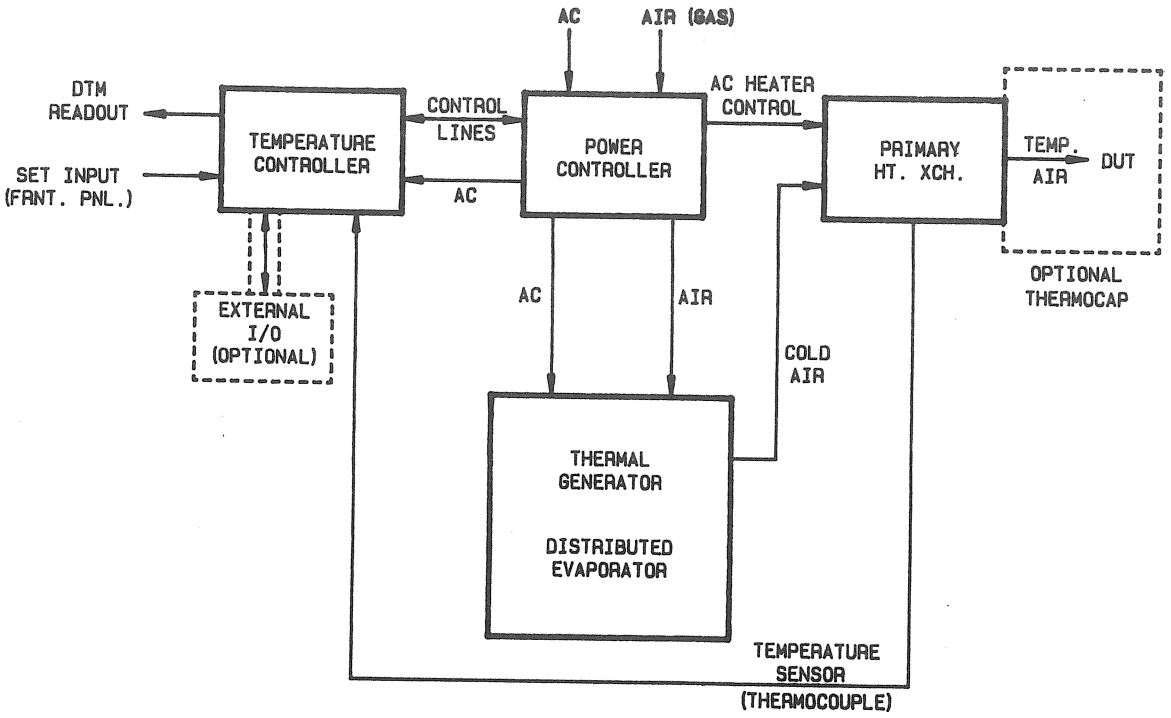

Figure 4-2. System Block Diagram.

To facilitate manual control and operation the system provides a 3½ digit (3 digit plus polarity) LED temperature display, as well as "OVERHEAT", "OUT OF RANGE", and "TEST" indicators. A single 3½ digit pushbutton temperature set module or optional 5-input module may be located either at the controller front panel (standard configuration) or up to 12 feet away from the controller (optional). The temperature set module indicates the SET TEMPERATURE(s), the selected temperature, and whether the air/gas stream temperature has reached the set value.

For automatic operation, the system provides all necessary input/output signals at TTL levels on optional BCD or IEEE-488 computer interface lines.

To accelerate temperature change, but reduce air consumption and noise, two (2) manually adjusted air/gas flow channels are provided. One channel (TRANSITION) may be preset for maximum (10SCFM) flow and the second channel (TEST) may be preset for some other rate (3SCFM is recommended although 2 to 10SCFM is possible). The microprocessor will select the appropriate channel or channels depending on user's choice. If operating in the default mode the TRANSTION channel when a change in temperature is requested and will switch to the TEST channel once the desired temperature is reached. When the user's choice is for both channels to be open the flow will be the sum of the two, that is, if TRANSITION is adjusted to 6SCFM and TEST is adjusted to 3SCFM when on together the resultant flow will be 9SCFM.

The ThermoStream WAND assembly permits a variety of configurations, including the double wall transparent Thermal Cap (optional) which eliminates the possibility of frost condensation at the TEST site during low temperature operation. Within the Thermal Cap, a nozzle and enclosure (shroud) assembly concentrates the temperature controlled air around the component and automatically adjusts for various component heights. The nonbreakable enclosures have been designed for ease of orientation to the DUT and easy interchange.

Standard system configuration places the controlling temperature sensor near the nozzle outlet in proximity to the DUT. This sensor location, in conjuction with the unique enclosure design, make it possible to closely control the DUT's temperature with minimal offset. An option (see Appendix B-10) is available permitting control (temperature sensing) directly from the DUT.

The system can be easily interfaced with complex testers. An effective thermal insulation kit is supplied with the system to protect the tester circuitry adjacent to the TEST socket from the thermal effects of the air/gas stream. The TEST site should be prepared in accordance with the concepts presented in Appendix C-2.

4-3 SUBASSEMBLY FUNCTIONS

Though the following discussion of each of the four (4) major subassemblies is presented separately, it is important to recognize the interdependency of each component.

4-3.1 Microprocessor Controller

The microprocessor controller design is based on an Intel 8085 microcomputer system. The controller governs the system's principle control operations. The basic microprocessor controller contains the system's only POWER switch, accepts a type "T" thermocouple input, provides a temperature digital readout with corresponding analog out signal, allows setting of desired TEST temperatures, contains factory set system limits, "NO FLOW" and "OVERHEAT" indicators, and RESET switch.

The controller is used to power up the system, interrogate the supplied temperature and compare it against both the requested and system limit temperatures. It controls the solid state relay (K4 - schematic designation) in the power controller which supplies the ac power to the heater located in the (WAND). The controller also provides all timing sequences.

Several controller options/enhancements are available which extend the system's capabilities. A five (5) TEMPERATURE SET module replaces the supplied single TEMPERATURE SET switch. A removeable TEMPERATURE SET module for remote desk top temperature setting is offered, and external software control may be obtained by adding either the BCD or IEEE-488 option.

The circuit analysis of the microprocessor controller is discussed in two sections: analog and digital. The analysis of the analog section covers the analog measurement circuit, sensor, and analog-to- digital converter. The digital circuit is discussed in two aspects: control and communication.

4-3.1.1 Analog Section

The analog circuit is shown in the functional block diagram of Figure 4-3. The primary thermocouple sensor located in the gas stream, delivers to the temperature monitor a microvolt signal proportional to the sensed temperature. The temperature monitor is a self-contained device that displays the temperature of the gas stream and also provides the amplifier stage with a signal of the displayed value equivalent to 10 mv/°C. The analog-to-digital converter digitizes the amplified analog input with 20 counts/°C of resolution and delivers the count to the digital section. A second amplifier stage and analog switch allow the microprocessor to read a second temperature for device control when the Device Under Test (DUT) Control Option is installed.

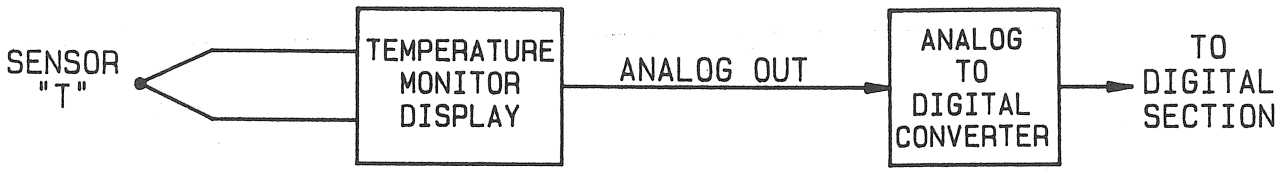

Figure 4-3. Analog circuit functional block diagram.

4-3.1.2 Digital Section

The digital circuit and hardware are shown in the functional block diagram of Figure 4-4. The digital controller section reacts to the various inputs according to the Program Residing in the Memory (PROM). The responses can be control of system parameters (heat, cool, flow) or control of communication input/output signals (front panel, BCD, IEEE-488).

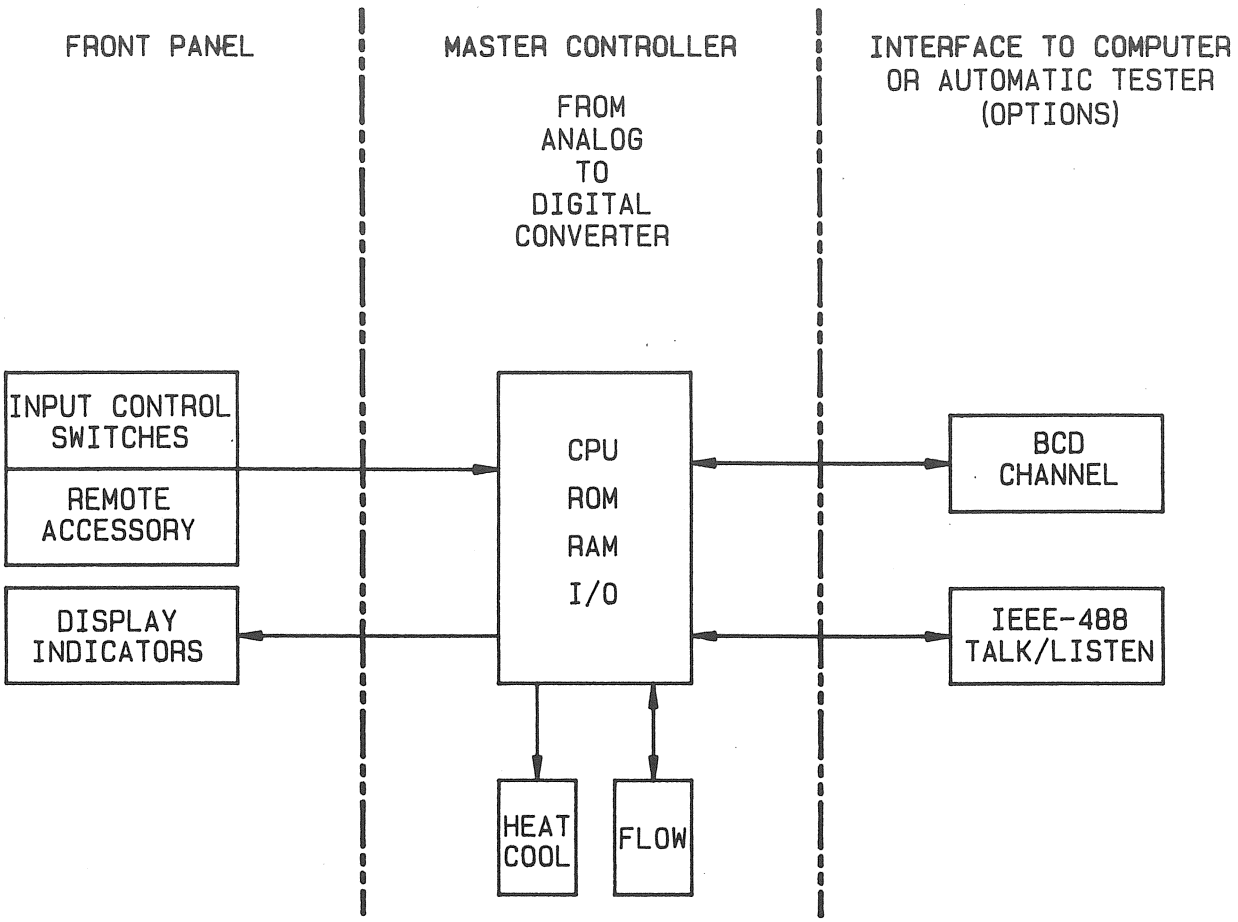

Figure 4-4. Digital circuit functional block diagram.

Basic Operation

The primary function of the temperature controller is to set the temperature of the gas stream (the Current Temperature) equal to the temperature requested by a set of thumbwheel inputs (the Set Temperature). The control system uses a PID algorithm to accomplish this.

4-3.2 Power Controller

The power controller, housed in the secondary heat exchanger cabinet, is the interface between the microprocessor controller, primary, and secondary heat exchangers.

This assembly contains all gas flow control and monitor devices, heater control solid state relay, system MODE select switch, system MAIN CIRCUIT BREAKER, and ac power for the other major subassemblies, as well as dc power for the optional stand and air dryer.

A LED mass flow meter is provided to allow optimization of gas flow for TEST requirements. This meter circuit has been calibrated, as outlined in Section 5-3.3, at time of manufacture. It should require only periodic verification.

The gas ports on the power controller rear panel are appropriately identified. The port labeled "STAND AIR OUT" is intended to be connected to the optional stand but if none exist, this port should be connected to the optional double wall Thermal Cap barbed fitting. The flow is regulated by R1 (schematic designation), which is factory preset to 30psig maximum, and controlled by the stand solenoid K9 (schematic designation).

The gas stream heater (located in the WAND), receives its ac power from a solid state relay (K4 - schematic designation) located in the power controller. This relay is controlled by the microprocessor controller.

The MODE select switch allows the system to be operated in the HEAT ONLY mode for above ambient testing. This feature is intended to eliminate unnecessary noise during system operation. This mode does not require the 10 minute time delay required by the refrigeration system making the system readily available.

A time lapse meter to record hours of system operation is located in the power controller.

Figure 4-5 showes the pneumatic diagram. The electrical schematic (D4124) is provided in section 7.

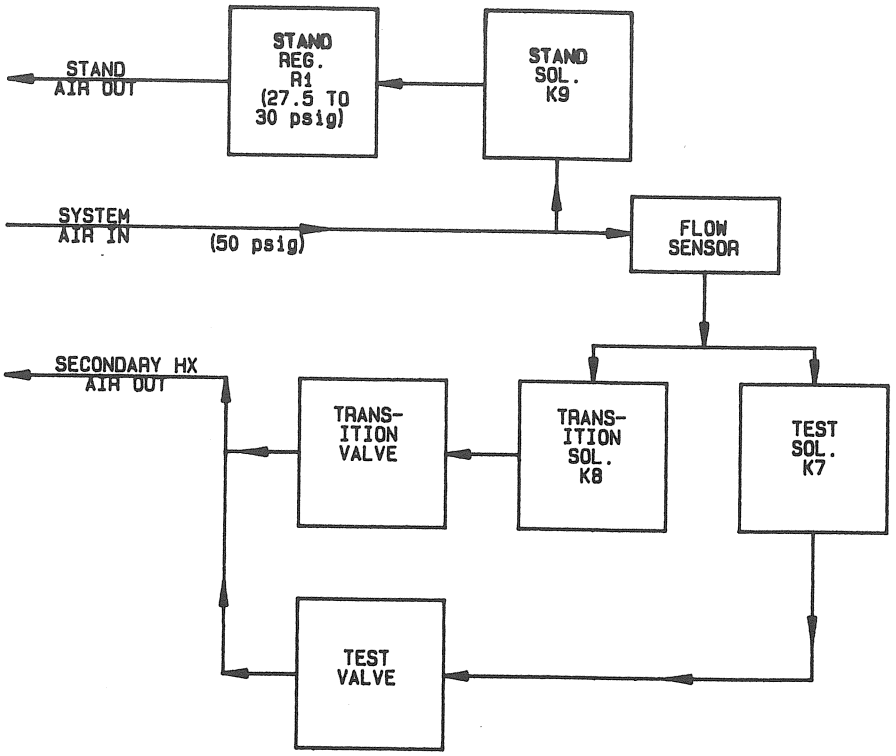

Figure 4-5 Pneumatic Diagram

4-3.3 Primary Heat Exchanger

The primary heat exchanger (WAND) located at the end of the suction line (distributed evaporator) assembly houses the heater used to condition the gas stream temperature to the desired temperature. It also supports the Thermal Cap and enclosures which interface to the tester and DUT, as well as delivers the gas stream to the TEST site.

Located in this assembly is a bi-metal temperature sensor, which senses the heater case temperature and opens the heater power circuit if the case temperature reaches 220°C. Also, in this assembly at the outlet of the heater, is a type "T" thermocouple junction which is the system's principle

temperature sensor or controlling sense input. The Thermal Cap and component enclosures, which provide the coupling to the tester and DUT, are attached to the outlet end of the WAND.

Figure 4-6 illustrates how this assembly functions. As shown, the gas enters the primary at one end and passes by a heater, then thermocouple, before exiting out the nozzle to the Thermal Cap.

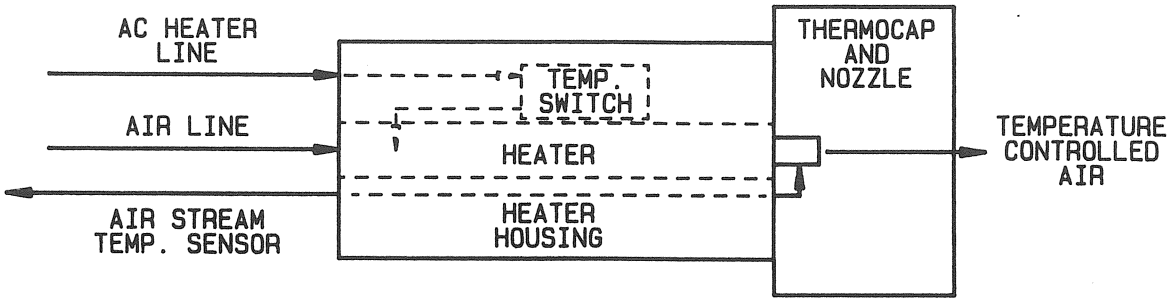

Figure 4-6. Primary Heat Exchanger.

4-3.4 Secondary Heat Exchanger

The secondary heat exchanger assembly is a cascade closed loop refrigeration system. It consist of a first stage refrigeration system and a second stage refrigeration system with a distributed evaporator.

When the power controller MODE SELECT switch is in the HEAT/COOL mode position, ac power is supplied to the first stage compressor after a 2 minute delay. After approximately 7 minutes as timed by the microprocessor controller, the second stage compressor will start. After another (1) minute delay, the WAIT lamp will extinguish and the READY lamp will glow steadily, indicating that the system is ready for operation.

The secondary heat exchanger cools the gas stream as it passes through the second stage distributed evaporator (SUCTION LINE ASSEMBLY) enroute to the primary heat exchanger.

The system may be changed from one mode to the other at any time, however, each change from HEAT ONLY to HEAT/COOL will initiate the 10 minute startup delay, during which time the system will not be available for use.

Figure 4-7 is a diagram of the operation of the cascade refrigeration system used in the TP0412A ThermoStream System. The first stage evaporator cools the second stage condenser. Two type "T" thermocouples have been mounted in this assembly to allow a service technician to monitor the first and second stage operations. The second stage evaporator does the actual cooling of the air as it travels to the primary heat exchanger. It should be noted that both stages have pressure gauges permanently installed. By monitoring these gauges, it is possible to determine the status of each stage.

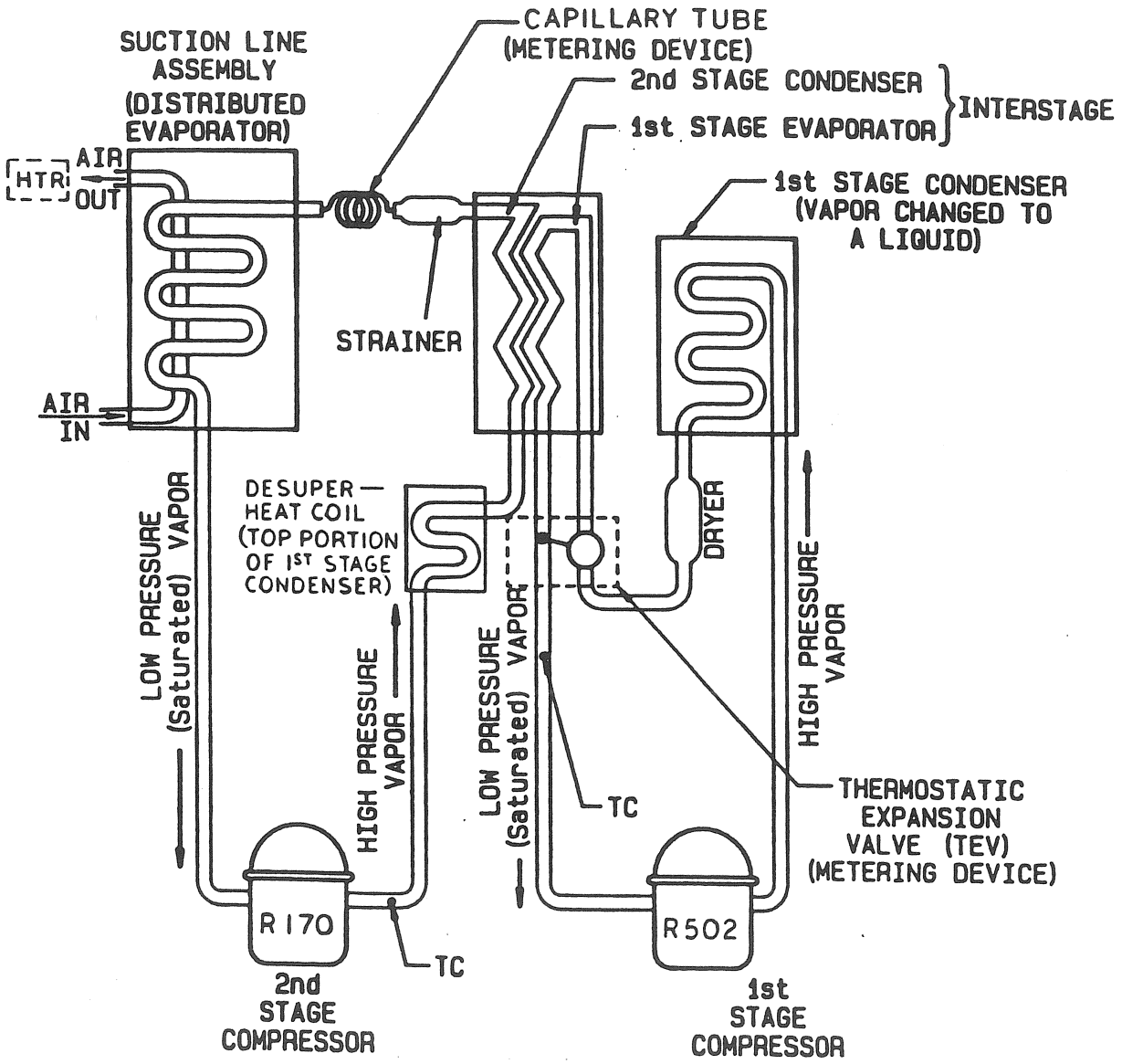

Figure 4-7. Cascade Refrigeration System.

SECTION 5
GENERAL MAINTENANCE

5-1 MAINTENANCE INTRODUCTION

The Temptronic Model TP0412A ThermoStream System has been designed and manufactured to withstand the rigors of constant use in most manufacturing environments. To ensure many hours of trouble-free service from this system, a minimum of routine servicing consistent with similar equipment should be performed on a regular basis. Refer to the warranty statement in Appendix A to determine user obligations and provisions.

This section contains the routine calibration and general maintenance procedures necessary to ensure continual, reliable system operation.

Though the procedures presented in this section are straight-forward, it is suggested that only authorized, trained technicians perform them.

If a malfunction is observed or suspected, refer to Section 6 for appropriate servicing procedures.

5-2 GENERAL MAINTENANCE

Combining a routine maintenance program with accepted operating practices which have been outlined previously in this manual and those accepted for similar TEST equipment, the system will require minimum servicing. The user should ensure that the system is being properly applied and that the insulating/interfacing are per recommendations to prevent undue stress on the system.

As in any good maintenance program operator education is a must to eliminate nuisance failures. It is recommended this manual be made available to the system operator(s) and both the start-up and shut-down procedures (see Appendix D) be located near the system for quick easy reference.

Provision for replacement parts should be made -- especially those items not readily available on site. The priority should be based on inconvenience caused if the system should fail. A parts list is provided in Section 6-5.

Inspection, (if not daily, at least weekly) should be made to ensure that neither stress nor wear is evident to the suction line assembly, that refrigeration balance pressures are normal, that interfacing at and around the TEST site is as originally installed, system input gas supply pressure is normal, refrigeration condenser is dust/dirt free, operation of any fans or motors is proper, system indicators functional, and system response (excursion) times are normal. If time permits, check system ultimate low temperature and compare results to earlier TEST.

The final component to this maintenance program, is an annual system checkout which adds microprocessor checkout procedure (Section 6-3), system functional checkout (Section 3-5), and calibration verifications (Section 5-3) to those inspections already mentioned. This usually necessitates removing the system from operation for a short period of time.

5-3 CALIBRATION INTRODUCTION

Calibration of the various circuits have been done by the manufacturer and should only require periodic verification or adjustment. The procedures presented here are the same as those performed at the factory and should be closely followed to ensure reliable results. As in any calibration it is important to use a known calibrated instrument as the standard.

5-3.1 Calibration of Digital Thermometer

The front panel temperature indicator is a self-contained type "T" thermocouple digital thermometer (DTM) with its own built in adjustment controls. Two separate calibration procedures are presented here, allowing the user to determine which is more convenient. The same results are achieved with either method.

5-3.1.1 Equipment Required

1. Analogic AN6520-8A Digi-Cal II* or equivalent.
2. Digital voltmeter (DVM) with 4½ digit read-out.

5-3.1.2 Calibration Procedures With Analogic AN6520-8A Digi-Cal II

1. Turn off power to the microprocessor controller. Remove controller from cabinet and top cover screen.
2. Remove the digital thermometer from the front panel.

Note: Place tape over openings on both sides of DTM case to prevent hardware from falling into case.

3. Connect the Analogic Digi-Cal II to the digital thermometer input terminals. This can be easily done by simply connecting the Digi-Cal II output to the TC input connector at the rear of the micro processor controller. Use "T" type thermocouples and ensure that the proper polarity is observed.
4. Connect the DVM to the DTM analog out screw terminals located on the right side of the lower PCB protruding from rear of DTM.
5. Lift out the optical filter if present. Locate the 2 calibration controls on the front edge of the upper PCB just above the display. The lefthand control adjust the "HIGH" reading and the righthand control adjust the "LOW" setting see Figure 5-1.

Note; The potentiometer located at the lower right of the display is used to adjust the meter linearization. This is done by the meter manufacturer and should never be adjusted by the user.

---

*If an Analogic AN6520-8A Digi-Cal II is not available and a millivolt reference standard is used instead, follow the procedures of Section 5-3.1.3.

6. Turn on microprocessor controller and allow 45 minutes of warm up time before proceeding.
7. Switch on the Digi-Cal II and set its output at +0.0°C. This is the low calibration point for the digital thermometer.

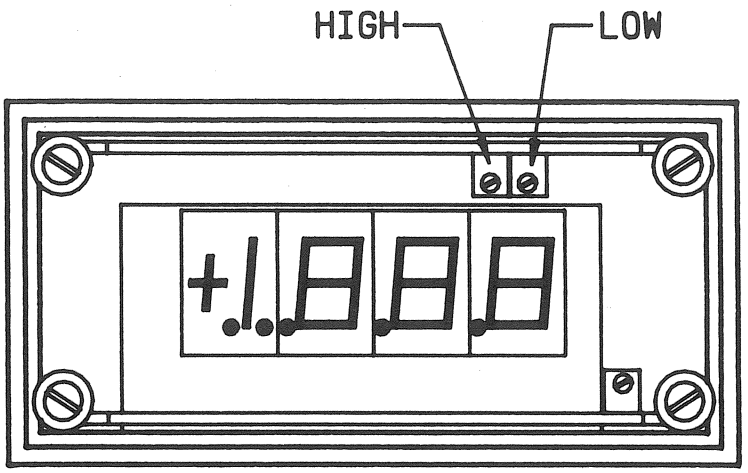

Figure 5-1. Calibration adjustment potentiometers for digital thermometer.

8. Adjust the "LOW" calibration control of the digital thermometer (Figure 5-1) to obtain a temperature display of +000°C and an analog measurement of +0.0 millivolts.
9. Set the Digi-Cal II output at +180.0°C. This is the high calibration point for the digital thermometer.
10. Adjust the "HIGH" calibration control of the digital thermometer (Figure 5-1) to obtain a temperature display of +180°C and an analog measurement of +1800 millivolts.
11. By repeating steps 5 through 10, verify the calibration of the digital thermometer.
12. Disconnect the Digi-Cal II, the thermocouple wire, and DVM from the digital thermometer.
13. Connect the microprocessor controller thermocouple to the digital thermometer.

14. Reinstall the digital thermometer optical filter.
15. Reassemble controller and reconnect for use.

5-3.1.3 Calibration Procedures With Millivolt Reference Standard

1. Prepare a calibration system as shown in Figure 5-2 by following the procedures given in steps 2 through 8 below.

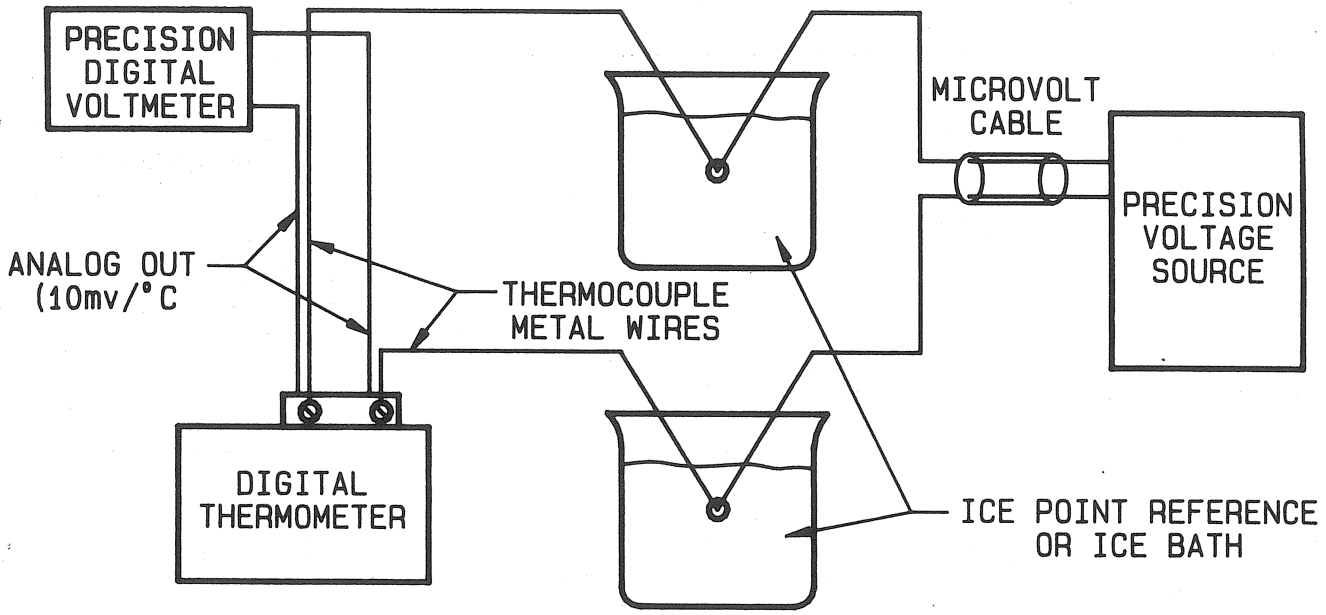

Figure 5-2. Setup for calibration of digital thermometer.

2. Turn power off, remove controller from cabinet, remove cover screen, and remove DTM from front panel to remove filter concealing adjustment potentiometers.
3. Select the thermocouple wire corresponding to the metals of the designated thermocouple, and prepare a TEST cable of not more than three feet in length.
4. Connect one end of the TEST cable to the digital thermometer, being careful to connect the "red" lead to the negative terminal of the digital thermometer.

5. Braze the other ends of the TEST cable to copper leads, forming two thermocouple junctions. Cover each junction with a piece of heat-shrink tubing or other waterproofing material.
6. Connect the copper leads to a TEST voltage generator.
7. Immerse each TEST cable thermocouple junction into a bath of water. Maintain the water at a measured 0°C by keeping fresh-water ice cubes in the water bath.
8. Connect the digital thermometer output screw terminals to a precision digital voltmeter, being careful to observe the polarity conventions shown in Figure 5-2 (Page 5-5).
9. Lift out the front optical filter of the digital thermometer, thereby providing access to the calibration adjustment poteniometers shown in Figure 5-1 (Page 5-4).

Note: The potentiometer located at the lower right of the display. It is used to adjust the meter linearization, which is done by the meter manufacturer and should never be adjusted by the user.

10. Turn power on allow 45 minutes for meter to warm up.
11. Set voltage standard output to ±000 microvolts. Polarity (+/-) will flash.
12. Adjust the LO calibration poteniometer, see Figure 5-1 (Page 5-4) to display ±000°C. Polarity (+/-) will flash.
13. Set voltage standard output to +8235 microvolts.
14. Adjust the HI calibration poteniometer, see Figure 5-1 (Page 5-4 to display +180°C on the digital thermometer and obtain +180°C millivolts on the digital voltmeter. The display will flash.
15. Repeat steps 11 through 14 until no further adjustment is necessary.
16. Use the following chart to check other points.

Temperature	Microvolt
-70°C	-2475
-55°C	-1987
+125°C	+5469
+200°C	+9286

17. Turn power off.
18. Disconnect the TEST cable and the analog output TEST cable.
19. Snap the flexible optical filter back in place on the front of the digital thermometer and reassemble controller.
20. Reconnect the system for use.

5-3.1.4 Digital Thermometer Specifications

Thermocouple	Type "T"
Read-Out Accuracy	±½ digit at 25°C
Temperature Resolution	1°C
Power	5vdc
Type	Seven-segment LED, red, 0.43 in. (11 mm) high
Polarity Indication	Automatic "+" or "-" sign displayed
Overrange Indication	All digits blanked to prevent erroneous read-out; "+" or "-" sign remains on
Operating Temperature Range	-10°C to +50°C

5-3.2 Analog Input Section Calibration

The TP0412A ThermoStream System does not require a system calibration. However, some offset or compensation is required for the analog input section (front end) of the microprocessor control board. Before performing the following procedure verify, the DTM calibration as outlined in Section 5-3.1.2.

5-3.2.1 Equipment Required

Alignment tool
Screwdrivers

5-3.2.2 Calibration Procedure

1. Turn system power off.
2. Remove all connections at rear of microprocessor controller.
3. Remove and save four (4) screws securing the front panel to the cabinet.
4. Remove microprocessor controller from cabinet and remove top cover screen.
5. Make power cord and control cable connections at rear of microprocessor controller.
6. Ensure all power controller connections.
7. Turn system power on, observing start-up procedure outlined in Section 3-6.
8. Allow system to operate for 30 minutes.
9. To gain access to the microprocessor calibration function, select the TEMPERATURE SET switch located in the yellow band of the rainbow and set -990. Observe that the OUT OF RANGE lamp lights and the "AT TEMP" indicator begins flashing.
10. While depressing the FLOW switch, momentarily depress the RESET switch, then release both switches.
11. Select any TEMPERATURE SET switch and set +000°C and depress the FLOW switch to initiate flow.

12. The system will stabilize at some point which can be determined when the AT TEMP indicator glows steadily. Allow 5 minutes for stabilization before making any adjustments.
13. Refer to page 5-10 (drawing D4088 5 of 5) to locate the zero adjustment potentiometer R20. Gradually adjust R20 until the DTM display corresponds to the set temperature. Rotating R20 clockwise (CW) request more heat and counter-clockwise (CCW) more cooling.

NOTE

During this process observe the EXT, MTA and MLA indicators. The MTA indicator glows steadily when at a control point and the EXT indicator lights when heat is required and the MLA indicator lights when cooling is required. Proper cal adjustment would have the DTM display correspond to the SET TEMPERATURE and the MTA indicator on with the EXT and MLA indicators occasionally flashing equally.

14. Set +200°C and once again allow the system to stabilize at some point. Again allow 5 minutes to ensure stabilization.
15. Refer to page 5-10 (drawing D4088 5 of 5) to locate the span adjustment poteniometer R17. Gradually adjust R17 until the DTM display corresponds to the set temperature. Rotate R17 CW to request more heat and CCW more cooling.
16. Set +000°C again and allow the system to stabilize. This time the DTM should indicate the set temperature. If not repeat steps 13 through 16.
17. Select any temperature (preferably the desired TEST temperatures) within the system operating range to observe any discrepancies.
18. Turn system off.
19. Disconnect cables at rear of microprocessor controller.
20. Reinstall cover screen and slide controller back into cabinet and secure with mounting hardware.
21. Remate cabling connections. System is now available for desired testing.

5-3.3 Flow Circuit Calibration

The mass flow sense circuit is located in the power controller. This circuit was adjusted at the factory and should only require periodic verification.

When calibrating the flow circuit, it is important to ensure that flow is ONLY indicated when there is flow. If this circuit is improperly calibrated such that a false flow indication is given during the power-up sequence before the purge cycle is initiated, the microprocessor will interpret this condition as loss of control and will put the system in a non-operating condition. A lamp pattern will be displayed on the front panel, see page 3-19. The corrective action is to calibrate the flow circuit per the following procedure.

Two separate calibration procedures are presented here allowing the user to determine which is more convenient. The results are the same.

5-3.3.1 Equipment Required

Dwyer Flow Gauge (Dwyer P/N RMC 106) - reference Section 5-3.3.2
Sierra Flow Meter (P/N MFM-1-1411214-11-442-12-1) - reference Section 5-3.3.3

5-3.3.2 Calibration Procedure (using Dwyer Flow Gauge)

1. Turn the system off, unplug system power and shut air source off.
2. Remove four (4) screws securing the power controller in the secondary heat exchanger cabinet. Pull the power controller forward about 6" and remove access panel in top cover to expose the calibration potentiometers, see Figure 5-3.
3. Disconnect the primary heat exchanger air out and secondary heat exchanger power connections.

4. Attach the Dwyer flow gauge to the primary heat exchanger out port. It should be noted that this gauge is incremented in standard cubic feet per hour (SCFH) yet the TP0412A ThermoStream System requires standard cubic feet per minute (SCFM). A simple formula of multiplying the desired system flow rate by 60m/hr will result in the proper Dwyer flow gauge reading. For example, 3SCFM x 60m/hr = 180SCFH which can now be indicated on the Dwyer flow gauge. Now mark the flow gauge for the equivalents of 2, 3, 6, 10, and 12 SCFM.
5. Depress system power switch, turn on air supply, and regulate air pressure to 50 psig. Air should be exhausting to the ambient from the Dwyer flow gauge.
6. Adjust the operating flow control valve (should be Transition) full counter clockwise (CCW). This ensures there is no restriction to the air flow.
7. Locate the FLOW Adjusting Potentiometer (reference Figure 5-3) on the flow circuit board in the power controller.

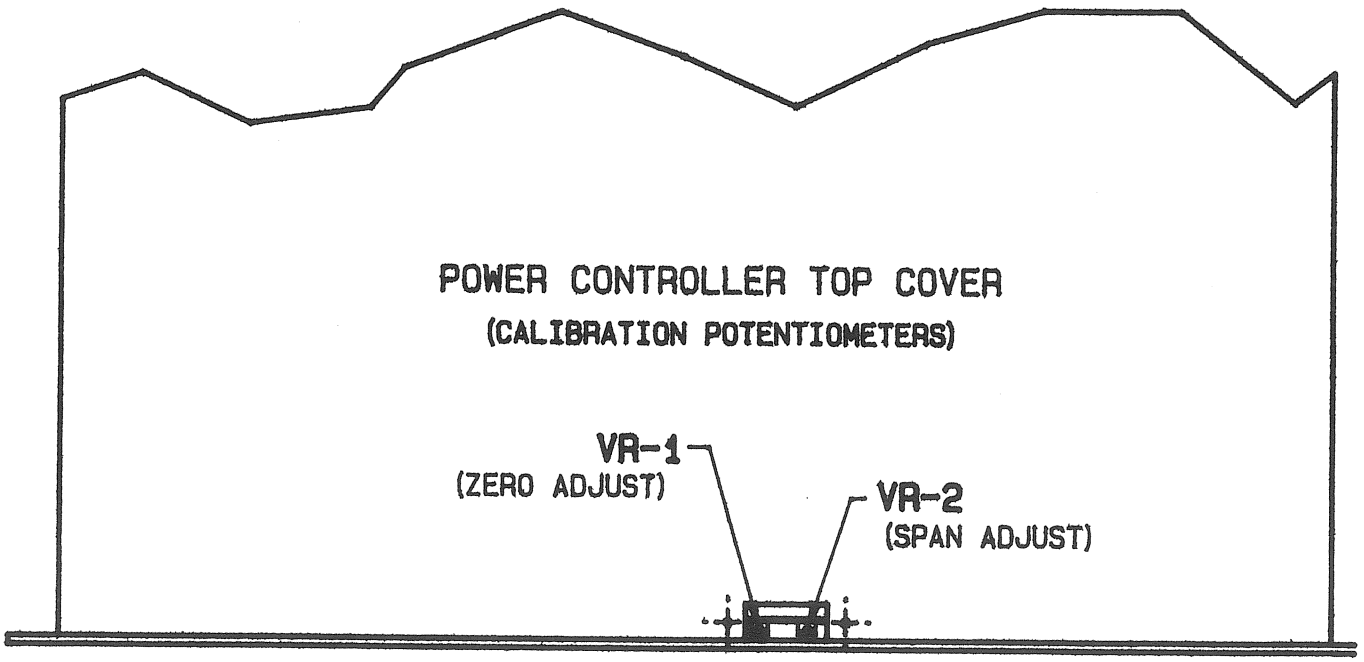

Figure 5-3. FLOW Adjustment Potentiometers' Location.

8. Now adjust the gas flow until the Dwyer flow gauge indicates 3SCFM. Then adjust the zero potentiometer (VR1 - left) until the flow meter LEDs indicate 3SCFM.
9. Next adjust the gas flow until the Dwyer flow gauge indicates 10SCFM. Then adjust the span potentiometer (VR2 - right) until the flow meter LEDs indicate 10SCFM.
10. Verify 3, 6, and 12SCFM flow rates now. Repeat the above steps if the results are not as expected.
11. After satisfactorily completing this procedure, shut the system off, disconnect all connections, secure power controller in the secondary heat exchanger cabinet, and properly reconnect the system to prepare it for operation.

5-3.3.3 Calibration Procedure (using Sierra Flow Meter)

1. Turn the system off, disconnect system power cord and shut off air source.
2. Disconnect the air hose attached to the AIR OUT port on the rear of the POWER CONTROLLER.
3. Attach the Sierra Flow Meter input to the AIR OUT port.
4. Connect the hose previously disconnected in Step 2 to the output of the Sierra Meter. The Sierra Meter should now be connected in series with the air flow.
5. Remove (4) screws securing the POOWER CONTROLLER in the SECONDARY HEAT EXCHANGER cabinet. Pull the POWER CONTROLLER forward about 6" and remove the access panel in the top cover, see Figure 5-3, to expose the calibration poteniometers.
6. Reconnect power cord, turn air source on and place the MODE select switch to the HEAT ONLY position.
7. Depress the POWER switch, regulate system input air pressure to 50psig., set functioning TEMPERATURE SET switch to -100°C and wait for a"READY" indication.

8. Adjust the TRANSITION valve full counter clockwise (CCW) to ensure no restrictions.
9. Depress the FLOW switch.
10. Now adjust the TRANSITION valve until the Sierra Meter indicates 3SCFM.
11. Adjust the zero poteniometer (VR1 - left) until the system FLOW METER on the POWER CONTROLLER front panel indicates 3SCFM.
12. Next adjust the TRANSITION valve until the Sierra Meter indicates 10SCFM.
13. Adjust the span potentiometer (VR2 - right) until the system FLOW METER indicates 10SCFM.
14. By adjusting the TRANSITION valve check 3, 6 and 12SCFM flow rates. Repeat Steps 10 through 13 if results are not as expected.
15. When results are satisfactory shut the system off, turn off air supply, disconnect Sierra Meter, install access cover, secure POWER CONTROLLER in the SECONDARY HEAT EXCHANGER cabinet and properly reconnect the air hose to the AIR OUT port to prepare the system for normal operation.

This completes the flow circuit calibration. Any further flow adjustments should be made using the flow valves on the power controller front panel. Whenever a flow problem is suspected, always verify the system gas supply input pressure to ensure it is properly regulated.

5-3.4 DUT Calibration

When the DUT option is supplied with the TP0412A ThermoStream^{R} system all necessary calibration has been performed. If this option was purchased separately, the temperature meter has already been calibrated per the procedure in Section 5-3.1 the user must however calibrate the microprocessor control circuit to this option during installation.

5-3.4.1 Equipment Required

1 TP0412A ThermoStream® System (calibrated)
1 12" X 12" X ½" silicon rubber sheet (ZZ00710) supplied with system
1 DUT console (TP0412 option) with calibrated DTM
1 ThermoCap (TP0412 option) assembly, size is dependent upon device to be tested
1 Shroud (supplied with ThermoCap) size dependent upon device to be tested

The following items are to be supplied by the user:

1 Sample device (DUT) to be tested
1 Modified test socket with thermocouple (2 thermocouple kits are supplied, see Sections B-10.2, B-10.4.1 & B-10.4.2)
1 Calibration alignment tool
1 Screwdrivers (common & #2 philips)

5-3.4.2 Calibration Set-Up

1. Mount DUT in socket fixture ensuring good mechanical and thermal coupling of the thermocouple to the DUT.

2. Remove microprocessor temperature controller cabinet and cover screen. Reference Figure B-10.2 "DUT Console/Microprocessor Interconnections".

3. Verify all system interconnections as outlined in Section 3-2 of the system manual.

4. Plug the test socket device thermocouple into the DUT console front panel.

5. Set the SYSTEM MODE select switch, located in the POWER CONTROLLER, for HEAT/COOL operation. Power on the system.

6. After obtaining the READY indication, set +25°C using the active TEMPERATURE SET switch.

7. Place the stand head/ThermoCap assembly in the down position over the calibration test fixture (reference Figure B-10.3) and depress the FLOW switch.

8. Wait for the TEST/AT TEMP indication. Observe air flow rate as indicated by the FLOW METER and adjust, if necessary, the TEST FLOW valve, located in the POWER CONTROLLER, until 10SCFM is achieved.

9. Set -85°C using the active TEMPERATURE SET switch. Observe air flow rate as indicated by the FLOW METER and adjust, if necessary, the TRANSITION FLOW valve, located in the POWER CONTROLLER, until 10SCFM is achieved.

5-3.4.3 DUT Calibration Procedure

1. Remove, if not already done so, the microprocessor controller cabinet and cover screen.

2. Center R7 and R12 on the main CPU board, see Drawing D4088 (page 5-10) by first turning them full CCW then turning CW 10 complete turns.

3. Put the microprocessor in the calibration mode by first setting -990 using the TEMPERATURE SET switch located in the yellow band of the rainbow. While depressing the FLOW switch, momentarily depress the RESET switch, then release both switches.

4. Verify that the DUT indicator located on the DUT console front panel is lit. If not, depress the DUT/SYSTEM select switch. This will place the system under DUT control. DUT temperature will be displayed on DUT meter and ThermoStream® temperature will be displayed on microprocessor meter.

5. If NO FLOW condition exists, initiate air flow by depressing the FLOW switch.

6. Set +000°C using the TEMPERATURE SET switch (middle switch if 5 switch option is installed) and allow the DUT temperature to stabilize for five (15) minutes after reaching AT TEMP before making any adjustments.

7. Adjust R12 on the main CPU board until DUT temperature meter indicates +000°C. After making an adjustment, allow 60 seconds for the DUT to stabilize again.

8. Set +195°C, using the same TEMPERATURE SET switch and allow the DUT temperature to stabilize for five (15) minutes after reaching AT TEMP before making any adjustments.

9. Adjust R7 on the main CPU board until DUT temperature meter indicates +195°C. After making an adjustment, allow 60 seconds for the DUT to stabilize again.

10. Repeat steps 5 through 9 until no error (±000°C) is observed at either +000°C or +195°C settings.

11. The calibration is now complete. Reinstall the cover screen and cabinet.

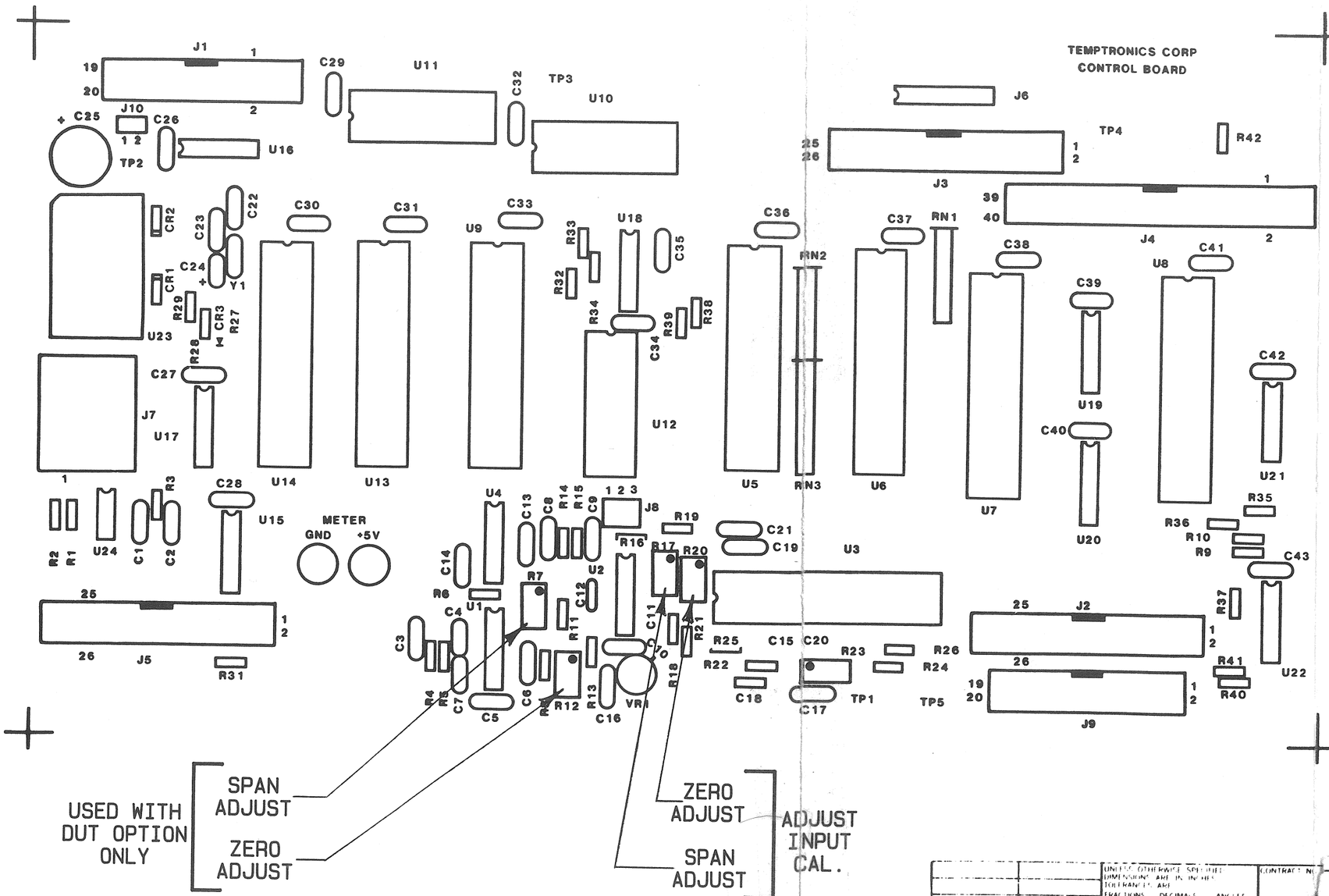

LMS1400	Section 7	UNLESS OTHERWISE SPECIFIED DIMENSIONS ARE IN INCHES TOLERANCES ARE FRACTIONS DECIMALS ANGLES XX XXX	CONTRACT NO	TEMPTRONIC
LMS1380	Section 5	MATERIAL	DRAWN M.	SILK SCREEN ARTWORK (COMP. SIDE)
LMS1170	App. 8-10		CHECKED	MAIN CONTROL BRD.
	TT-112A	FINISH	UNLESS OTHERWISE SPECIFIED RESISTANCE VALUES ARE OHMS % WATT CAPACITANCE VALUES ARE IN % VOLTS	SIZE D · CODE IDENT NO · DRAWING NO 4088 · REV A
NEXT ASSY	USED ON			SCALE 2:1 · SHEET 5 OF 5
APPLICATION		DO NOT SCALE DRAWING		

SECTION 6
SERVICE INFORMATION

6-1 SERVICE INFORMATION

The Model TP0412A ThermoStream System is a trouble-free system requiring only routine maintenance as outlined in Section 5. However, as is the case with any equipment, it is possible that there will be instances during the system life time which may require more than general maintenance.

It is requested that the User call Temptronic Service Department directly and describe the malfunction experienced.

For service related issues contact Service as follows:

Telephone;
1-800-558-5080 Customers outside Massachusetts
1-(617)-965-4145 Customers within Massachusetts

Note: These numbers are designated Service lines ONLY and cannot be transfered to any other Departments within Temptronic. The Corporate main number remains unchanged and should be used for all non-service related calls.

1-(617)-969-2501

Telex Number;
211938; answer back SERVSUR

The diagnostics and procedures presented in this section, are intended to assist in determining sources of problems and possible solutions. Only qualified technicians should perform these procedures.

6-1.1 Warranty

The Model TP0412A ThermoStream System is warranted for a period of one year upon delivery to the original purchaser. A copy of the Warranty is provided in Appendix A.

6-2 TROUBLESHOOTING

For the benefit of those users who are qualified to perform in-depth circuit board analysis and component replacement, a complete set of schematic, logic, and wiring diagrams has been included in Section 7 of this manual.

As an aid to troubleshooting, possible malfunctions and recommended corrective actions are listed in Table 6-1. This table is intended to assist in determining cause of fault should the system malfunction. Should the indicated TEST procedure be unclear, DO NOT proceed with the TEST. Contact Temptronic Service Department for additional assistance.

Table 6-1. System troubleshooting procedures.

Condition	Probable Cause	Verification/Remedy
System does not power up	POWER cord not connected	Connect POWER cord
	Fuse blown/missing from microprocessor controller or MAIN CIRCUIT BREAKER tripped	Replace fuse or reset circuit breaker. Try to determine cause for either device to be activated.
	Interconnecting cables improperly installed or missing	Check cables for proper installation
System will not heat	System in "WAIT" mode	Check STATUS indicator
	No gas flow	Check gas FLOW indicator
	System in OVERHEAT	Check OVERHEAT indicator (depress OVERHEAT RESET)
	Thermal Cutout switch defective	Check switch for open
	Defective heater	Check heater resistance (2100w heater - 18 ohms, 1800w heater - 25 ohms)

Condition	Probable Cause	Verification/Remedy
No gas flow	System gas source turned off	Turn on system gas supply
	FLOW switch not depressed after RESET switch was depressed	Depress FLOW switch
	Either or both flow channel control valves fully closed	Open flow channel control valves
Heater control circuit inoperative	Defective SSR (K4) in power controller	Check K4 for proper operation
	Control line open circuited	Verify control lines in system control cable
	No output from microprocessor controller	Initiate internal diagnostics (Section 6-3)
System does not indicate temperature. Display will indicate a high negative value (ie -400)	Open thermocouple junction	Short thermocouple input to microprocessor controller (meter should indicate ambient). Check all connectors and cables for opens.
	Defective temperature meter	Verify thermocouple input to meter (replace meter)
Temperature meter does not change as temperature changes (display fixed at some value usually ambient)	Thermocouple input shorted between sensing junction and meter input	Check each thermocouple connector and cable for short
Temperature meter does not indicate actual temperature	Meter out of calibration	Perform meter calibration procedure (Section 5-3.1)

Condition	Probable Cause	Verification/Remedy
System powers up but does not respond to TEMPERATURE SET pushbutton switches	Temperature set module not plugged in	Verify TEMPERATURE SET switch module connections
System does not control at set temperature	System out of calibration	Perform system calibration outlined in Section 5-3.2
System will not cool below ambient	MODE switch in the HEAT ONLY position	Place MODE switch in the HEAT/COOL position
	Secondary heat exchanger defective	Check refrigeration pressure gauges to determine if either or both stages are operating
System heats and/or cools but never reaches system limits (-70°C/+205°C)	Excessive air/gas flow	Verify input air/gas supply is regulated to 50psig.
System heats and/or cools but never reaches system limits (-70°C/+205°C) in conjuction with an OUT-OF-RANGE indication	Either one or both of the -984 and -985 routines have been initiated	To clear the routines, simply power down and power up.

6-2.1 Failure Conditions At Start-Up

The following error conditions are possible prior to the 90 second purge cycle. (Refer to Section 3)

CONDITION	OVER HEAT INDICATOR	NO FLOW INDICATOR	OUT OF RANGE INDICATOR
J1-P8, J1-P13 & J1-P17 not at logic zero (0)	OFF	OFF	ON
Safety return reads safe when it should read unsafe	OFF	ON	OFF
Flow detected when valves should be closed. (Bar graph LED(s) usually lit also)	OFF	ON	ON
ROM U6 checksum error	OFF	ON	OFF
ROM U13 checksum error	OFF	ON	ON
ROM U8 checksum error	ON	OFF	OFF

NOTE

These tests are made in the sequence as listed. If any of the conditions are observed, power down the system then apply power again. If condition persist contact the factory.

6-3 MICROPROCESSOR CONTROLLER CHECK-OUT PROCEDURES

The microprocessor has been programmed to perform several internal diagnostic routines. Before any routine may be initialized, the system must be operating under front panel control. Each routine has been assigned a code which the operator must input using the TEMPERATURE SET switch (command control switch) located in the yellow band of the rainbow. In most cases, some of the microprocessor controller front panel indicator lamps are used to indicate pass or fail condition.

The following list shows the codes for each routine and gives a brief explanation of the function. The implementation for each routine is given in subsequent sections.

CODE	Function
-990	Used to put system into calibration mode. Refer to Section 5-3.2.2 step 10. This is the only diagnostic function which allows the system to continue to control temperature.
-991	RAM TEST.
-992	Used to TEST each bit from each segment of the TEMPERATURE SET switch(s).
-993	Checks A/D low byte. (20 counts/°C)
-994	Verifies system measurement of ac power line frequency.
-995*	Test all microprocessor controller front panel lamps.
-996**	No function
-997**	Reads the IEEE-488 address switch setting
-998*	Checks BCD input and output lines.
-999	No function

* ** Codes not assigned a function at this time.
Codes dedicated to options. Routine is provided with option.

6-3.1 -990 Routine

This routine implements the calibration mode for adjustment to the analog input section of the microprocessor main printed circuit board. This is used to calibrate either the air/gas control loop or the device control loop, depending on which control is enabled (air/device). Refer to Section 5-3.2.2 for the procedure to initialize this routine and the complete calibration procedure.

6-3.2 -991 Routine

This routine is used to TEST the RAM, by checking ram 0 and ram 1. The indicators used are; OUT OF RANGE (RAM-U5), and NO FLOW (RAM-U7).

To implement perform the follow steps:

1. Select the TEMPERATURE SET switch located in the yellow band of the rainbow and set for -991.
2. Depress and hold the FLOW switch while momentarily depressing the RESET switch then release both switches.
3. Observe that first the OUT OF RANGE then NO FLOW indicators flash. This will continue until the routine is interrupted.
4. If an indicator stays lit, a problem exists with the indicated device and it must be replaced.
5. Depress RESET to cancel routine and return to normal function.

6-3.3 -992 Routine

This routine TEST each bit of each TEMPERATURE SET switch(s) segment. The EXT, MTA, MLA, OVERHEAT, NO FLOW, and OUT OF RANGE indicators are used for this TEST as follow;

6-3.3.1 Segment Selected

The EXT and MTA lamps indicate which segment is being tested.

1. When neither are lit the units segment is being tested.
2. When MTA only is lit the tens segment is under TEST.
3. When EXT only is lit the hundreds segment is being tested.
4. When EXT and MTA are lit the polarity segment is under TEST.

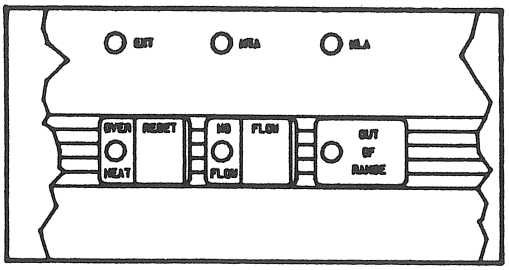

UNITS SEGMENT
(No Indicators)

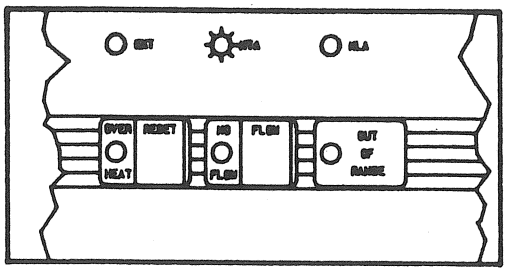

TENS SEGMENT

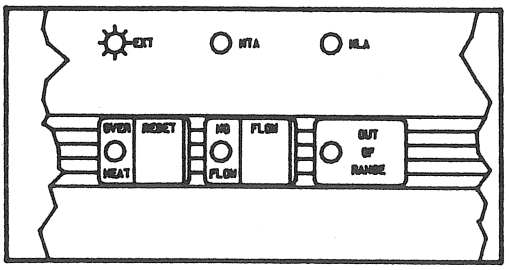

HUNDREDS SEGMENT

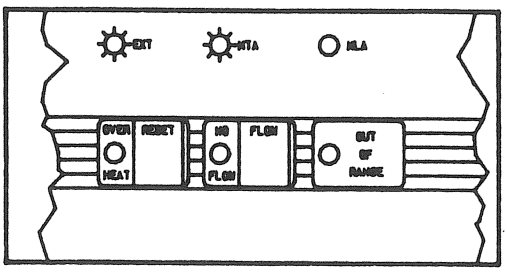

POLARITY SEGMENT

6-3.3.2 BCD Display

The MLA, OVERHEAT, NO FLOW, and OUT OF RANGE indicators, when lit, have been assigned the following BCD values;

1. OUT OF RANGE.....BCD 1 (LSB)
2. NO FLOW.....BCD 2
3. OVERHEAT.....BCD 4
4. MLA.....BCD 8 (MSB)

Thus, if the 5 digit was showing in the segment under TEST, both the OVERHEAT (BCD 4) and OUT OF RANGE (BCD 1) indicators would be lit.

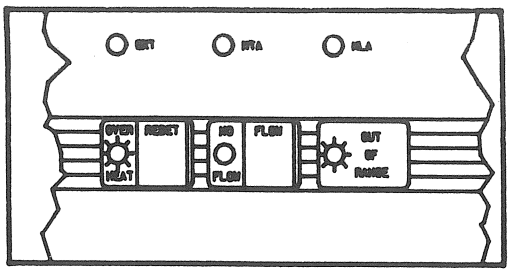

BCD DISPLAY

When testing the polarity segment, the OUT OF RANGE indicator should light when a negative (-) sign is showing and go out when a positive (+) sign is showing.

To initiate the TEMPERATURE SET switch routine simply;

1. Select the TEMPERATURE SET switch located in the yellow band of the rainbow and set for -992.
2. Depress and hold the FLOW switch while momentarily depressing the RESET switch then release both switches.
3. Select TEMPERATURE SET switch to be tested.
4. Continue to depress and release the FLOW switch until the desired switch segment to be tested is selected.
5. Inturn, select and verify each digit in the segment by observing the lamps.
6. Depress RESET to cancel routine and return to normal function.

In the event the expected result is not observed, then a problem exists requiring further testing.

1. Check all cabling/connections from the TEMPERATURE SET switch to the main PCB.
2. Refer to appropriate switch select board schematic to verify operation.
3. Because of its complex assembly, the TEMP SET switch module is intended to be replaced as a complete assembly.

6-3.4 -993 Routine

This routine, in conjunction with a thermocouple simulator, allows verification of meter, analog section and A/D converter. 1 BCD count = 1/20°C.

The front panel indicators EXT, MTA, MLA, OVERHEAT, NO FLOW, and OUT OF RANGE when lit, have been assigned the following BCD values;

1. OUT OF RANGE.....BCD 1 (LSD)
2. NO FLOW.....BCD 2
3. OVERHEAT.....BCD 4
4. MLA.....BCD 8
5. MTA.....BCD 16
6. EXT.....BCD 32 (MSD)

To initiate this routine simply;

1. Select the TEMPERATURE SET switch located in the yellow band of the rainbow and set for -993.
2. Depress and hold the FLOW switch while momentarily depressing the RESET switch then release both switches.
3. Observe lamps while adjusting the simulator setting 1°C to verify proper system operation.
4. Depress RESET to cancel routine and return to normal function.

6-3.5 -994 Routine

This routine allows the microprocessor to measure the ac power line frequency.

The OVERHEAT, NO FLOW, and OUT OF RANGE indicators, when lit, have been assigned the following values;

1. OUT OF RANGE.....BCD 1
2. NO FLOW.....BCD 2
3. OVERHEAT.....BCD 4

To initiate this routine simply;

1. Select the TEMPERATURE SET switch located in the yellow band of the rainbow and set for -994.
2. Depress and hold the FLOW switch while momentarily depressing the RESET switch then release both switches.
3. Depress RESET to cancel routine and return to normal function.

Thus, if both the NO FLOW and OVERHEAT indicators are lit, showing a 6, the line frequency would be 60 hz..

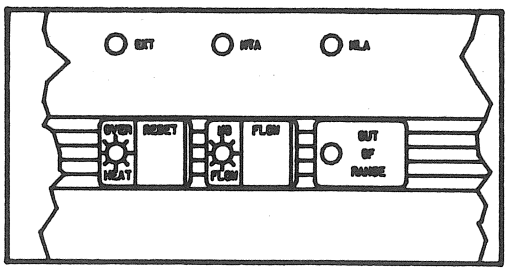

60 CYCLE

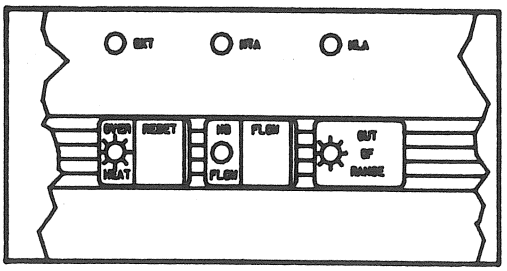

50 CYCLE

6-3.6 -995 Routine

This routine allows simultaneous testing of all the microprocessor controller front panel lamps.

To initiate this routine simply;

1. Select the TEMPERATURE SET switch located in the yellow band of the rainbow and set for -995.
2. Depress and hold the FLOW switch while momentarily depressing the RESET switch then release both switches.
3. Observe that all lamps begin flashing simultaneously and will continue to do so until routine is interrupted.
4. Should any lamp fail to function, refer to appropriate schematic to verify lamp electrical connections and operation.
5. Depress RESET to cancel routine and return to normal function.

6-3.7 -996 Routine

This routine is not present in the software of a TP0412A.

6-3.8 -997 and -998 Routines

These routines are dedicated to testing various conditions associated with either the IEEE-488 or BCD options. If the system has not been configured with either option, the routines will initiate no action.

6-3.9 -997 Routine

This routine will display the address switch setting (switches 1 through 6) located on the microprocessor controller rear panel.

The microprocessor reads the address switch setting during the power up sequence. To enter a new address after power on change the switch setting to the appropriate setting then depress the RESET switch.

The front panel indicators EXT, MTA, MLA, OVERHEAT, NO FLOW, and OUT OF RANGE when lit, indicating an "on" condition, have been assigned the following values;

	INDICATOR		BCD VALUE
switch 1	OUT OF RANGE	IEEE-488 address bit 0 (LSB)	1
switch 2	NO FLOW	IEEE-488 address bit 1	2
switch 3	OVERHEAT	IEEE-488 address bit 2	4
switch 4	MLA	IEEE-488 address bit 3	8
switch 5	MTA	IEEE-488 address bit 4 (MSB)	16
switch 6	EXT	Power on mask	32

NOTE: If all switches are in the "off" position or if only switch 7 is in the "on" position, all indicators will be "off".

To initiate this routine simply;

1. Select the TEMPERATURE SET switch located in the yellow band of the rainbow and set for -997.
2. Depress and hold the FLOW switch while momentarily depressing the RESET switch then release both switches.
3. Observe lamps to verify switch setting. If the results were not as expected visually check address switch for proper switch positions. Reset switch.
4. Depress RESET to cancel routine and return to normal function.

6-3.10 -998 Routine

This diagnostic routine is supplied as part of the BCD option. When implemented, both the input and output lines associated with this option are checked simultaniously. This is accomplished, by merely reflecting the information on the input lines, out on the output lines.
It should be noted, that the 800 bit is always zero.

External instrumentation is required to observe the results of this routine. No front panel indicators are used for this routine.

To initiate this routine simply;

1. Select the TEMPERATURE SET switch located in the yellow band of the rainbow and set for -998.
2. Depress and hold the FLOW switch, while momentarily depressing the RESET switch, then release both switches.
3. Verify information on output lines is the same as that on the input lines using some external instrumentation.
4. Depress RESET to cancel routine.

6-3.11 -999 Routine

This routine is not present in the software of the TP0412A.

6-4 REFRIGERATION SERVICING

Refrigeration servicing is not considered routine maintenance. Though the refrigeration subassembly is a straight forward non-complexed system, it is recommended that servicing be done ONLY by a trained refrigeration technician using well recognized techniques and approved equipment.

Under normal circumstances, leak testing should be accomplished with the refrigeration system properly charged with the amount and type of refrigerant specified.

However, the second stage is charged with R-170 which requires special considerations. So for this reason, it is recommended to evacuate and charge the second stage with R-502 when leak testing of the second stage is necessary.

UNDER NO CIRCUMSTANCES IS THE REFRIGERATION SYSTEM TO BE CHARGED FOR LEAK TESTING OR ANY PURPOSE WITH ANY GAS AT ANY PRESSURE ABOVE 150 PSIG.

6-4.1 Equipment Required

The following tools/equipment are required to service this assembly. Items 1 through 9 combine to form the charging station.

1. Vacuum pump (Alcatel ZM2008A [120v, 60hz])
2. Manifold with gauges (Robinair 13074)
3. Metal Lines with Quik Couplers [(2) Robinair 13024]
4. Line Adapters [(2) Robinair 13023]
5. Charging valves [(2) Ritchie DC1 1900)]
6. Vacuum Gauge (Airserco 8990SM - must specify voltage)
7. Oil Trap (Airserco 8971)
8. Vacuum Gauge Tube (Airserco 8970SM)
9. Brass Nipple (1/8" X 3½") & brass threaded coupling (1/8")
10. Crank case heater
11. Wrenches [(2) 9/16"]
12. Charging cylinder containing R502 first stage refrigerant.
13. Tank of R170 refrigerant for second stage.

Note: Due to the vacuum requirement it is recommended that the regulator on R170 tank be constructed with a metal diaphram.

14. Appropriate leak detection devices
15. Type "T" temperature meter for premounted thermocouples
16. Assorted hand tools
17. Volt/ohm meter or "Annie" (not necessary for all repairs)

6-4.2 Refrigeration Table

The following table provides the necessary information for determining the status of the refrigeration system, as well as, the information necessary to service the system.

Table 6-2. Refrigeration Data.

		First Stage	Second Stage
Refrigerant Type		R-502	R-170
Type of Charge		Measured	Static
Amount of Charge		1(lbs) 5½(oz.)	115 psig.*
No Load Performance	Suction	0	15" Hg
	Discharge	125	95 psi.
Balance Pressures (+25°C ambient)			95**

* Charging of second stage must be performed at room temperature [20°C to 23°C (68°F to 74°F)].

** Balance pressure is after system has been off for 8 hours and in an ambient as specified above.

6-4.3 TPO412A Dehydration and Charging Procedure

The procedure outlined on drawing D5272 (following page) is provided as a reference ONLY. If any instruction is unclear or unfamiliar DO NOT proceed. Contact Temptronic Service Department for assistance.

6-5 HEATER ASSEMBLY REPLACEMENT

STEP 1 Depress the system POWER switch and remove power cord.

STEP 2 Remove Thermal Cap, if installed, and heater housing assembly from optional stand, if present.

STEP 3 Loosen set screws securing the coupling assembly to the heater assembly. Slide coupling back over the SUCTION LINE assembly. Refer to drawings D3902 and D4107 (Section 7).

NOTE

TO PREVENT DAMAGING THE DEWPOINT HEATER, DO NOT CUT THE ELECTRICAL TAPE WRAPPED AROUND SUCTION LINE ASSEMBLY.

STEP 4 Pull back insulation material to expose electrical connections. Disconnect all wire connections except the brown and violet wires (dewpoint heater).

STEP 5 Using a wrench to maintain stationary the fitting at the end of the suction line assembly, rotate the heater assembly counter clockwise.

STEP 6 Apply leak lock to fitting threads.

STEP 7 Connect SUCTION LINE and replacement heater assembly by rotating the heater assembly clockwise until tight.

STEP 8 Make wire and thermocouple connections as shown.

STEP 9 Slide coupling assembly into position and secure in place with set screws (#8-32 X ¼, P/N FA81490).

STEP 10 Reinstall housing in stand, re-attach Thermal Cap then reconnect system for normal operation.

6-6 PARTS LIST

The Model TP0412A ThermoStream System has been designed, utilizing experience gained from Temptronic pioneered ThermoStream temperature controlled air sources, in use since 1974 and the latest technologies. As a result, the system has been determined to be both durable and trouble-free eliminating the need for large inventories of spare parts.

The following should not be considered as recommended spare parts required to support the TP0412A ThermoStream system. It is each user's responsibility to identify those items which are considered expendable or serviceable onsite and should make arrangements accordingly. Temptronic intends to replace, where possible, at the subassembly level in the field.

Assembly Level	Description	Part Number
System	Insulation Interface Kit	ZAK 40480
	System Operating Manual	LM 00620
	Power Cord	SA 33974
Primary Heat Exchanger	Foamed Heater Ass'y	SA 36720
	Thermocouple Ass'y	SA 41120
	Thermal Cap Assemblies	see Appendix B-3
	Glass Replacement Ass'y (6")	CS 00560
	Glass Replacement Ass'y (4")	CS 00570
	Shroud Kits	see Appendix B-4
*Refrigeration System	Replacement of these items is not considered routine maintenance.	
	Charged Secondary Heat Exchanger with Suction Line Ass'y (60hz)	SA 47482
	(50hz)	SA 47484
	First Stage Compressor - 3/4 HP (60hz)	ZZ 03670
	(50hz)	ZZ 03650
	Second Stage Compressor - 1/2 HP. (60hz)	ZZ 03680
	(50hz)	ZZ 03660
	Suction Line Ass'y	SA 38980

Microprocessor Controller

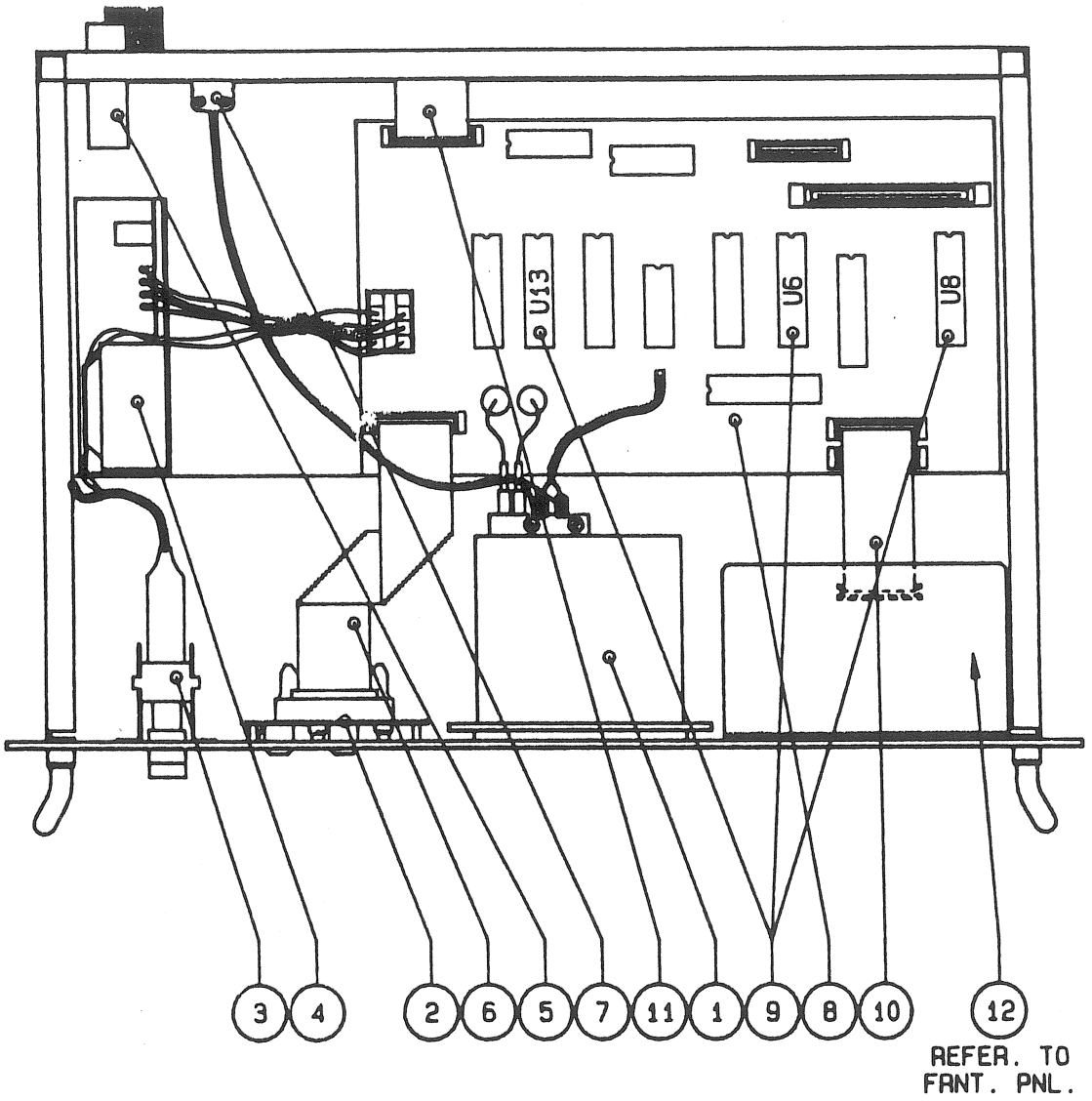

ITEM CALLOUTS (TEMPTRONIC PART #'S)		
1 - MM03320	5 - FF00020	9-CONTACT SERVICE DEPT.
2 - PC41663	6 - SA34831	10- SA34640
3 - SS36050	7 - CR00640	11- SA34871
4 - PS00350	8 - PC40883	12- (1) SELECT MODULE SA35900 (5) SELECT MODULE SA32160

Power Controller

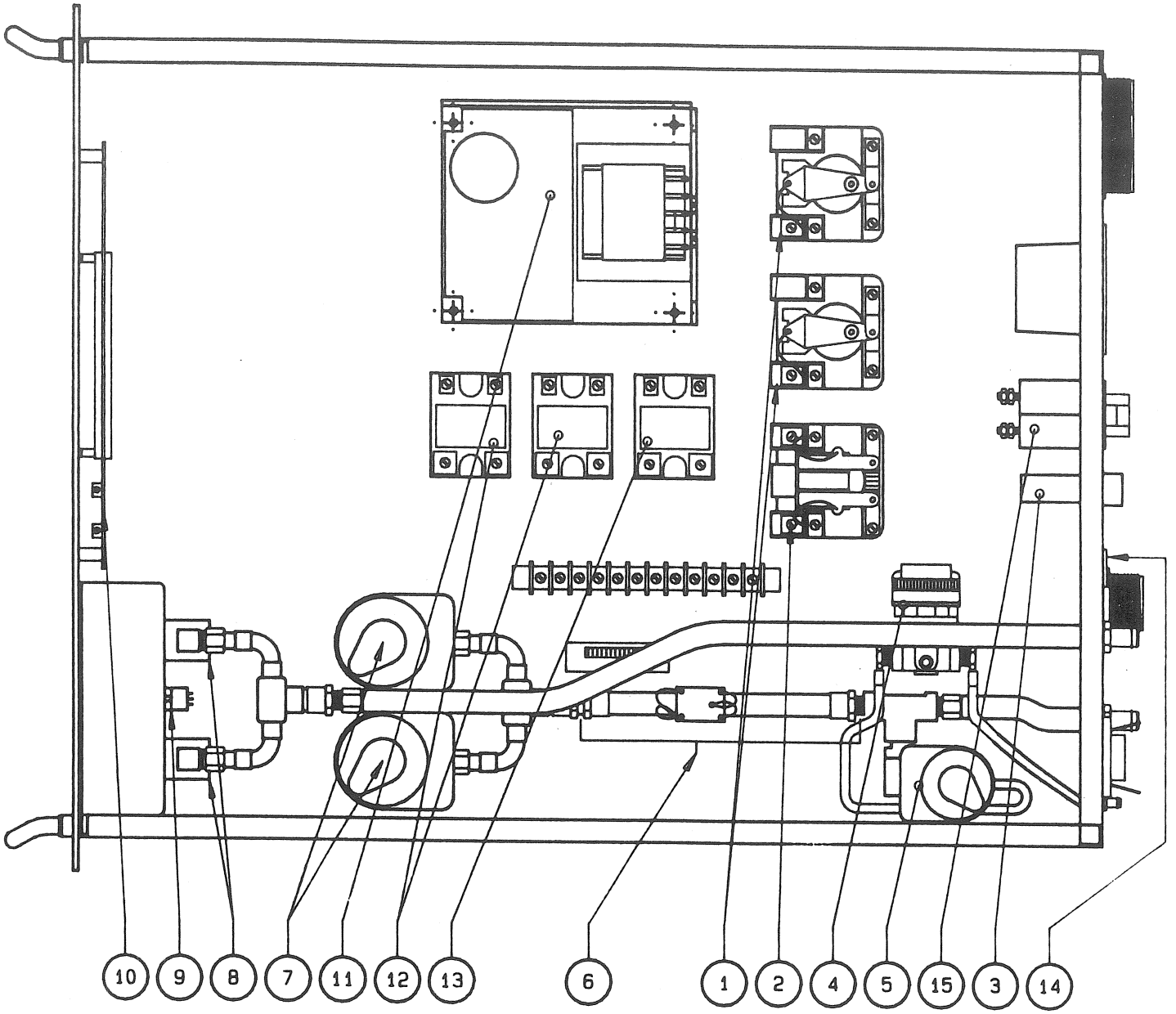

ITEM CALLOUTS (TEMPTRONIC PART #'S)		
1 - KK00840 (K2, K3)	6 - SA39230	11- SA43590 (PS1)
2 - KK00610 (K1)	7 - KK00790	12- KK00560 (K5, K6)
3 - FF00180 (FUSE)	8 - VA00140	13- KK00050 (K4)
4 - VA00200 (R1)	9 - SS00930	14- CR00640 (J7)
5 - KK00710 (K9)	10- PC40723	15- KK00860

TYPICAL EVACUATING / RECHARGING SETUP (SECOND STAGE)

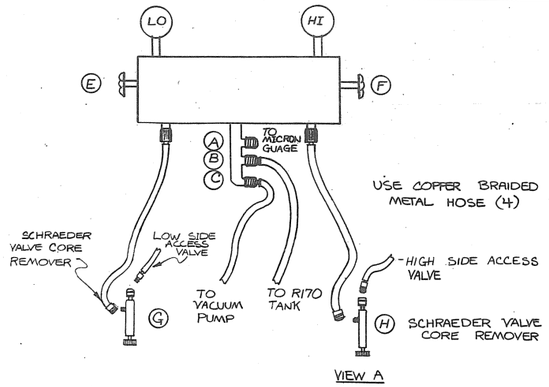

VIEW A

ALSO NEEDED ;

CRANKCASE HEATER
SCHAEDER VALVE REMOVER (2)
VACUUM (MICRON) GUAGE AND TUBE.
2 STAGE VACUUM PUMP
5 PORT MANIFOLD AND BRAIDED HOSES.

EVACUATING; 2ND STAGE

1. ATTACH CRANKCASE HEATER TO LOWER PORTION OF SECOND STAGE COMPRESSOR AND PLUG IN.
2. THREAD VALVE CORE PULLERS ON COMPRESSOR ACCESS VALVES.
3. REMOVE VALVE CORES BUT LEAVE VALVES (G) AND (H) ON REMOVERS CLOSED. CONNECT HOSES TO HIGH AND LOW SIDE STEM REMOVERS.
4. CONNECT VACUUM PUMP & R170 TANK. MAKE SURE VALVES (D)(G)(H)(A) ARE CLOSED & (C)(B)(E)(F) ARE OPEN.
5. * START THE VACUUM PUMP AND EVACUATE THE HOSES & MANIFOLDS. WHEN THE LOW PRESSURE GAUGE READS A VACUUM, SLOWLY OPEN VALVE (A) AND MONITOR VACUUM UNTIL IT REACHES LESS THAN 20 MICRONS. RECORD THE TIME TO ACHIEVE THIS VACUUM.
6. * CLOSE VALVE (C), SHUT OFF THE VACUUM PUMP, AND MONITOR THE VACUUM GAUGE RISE. AFTER THREE MINUTES IT SHOULD NOT EXCEED 100 MICRONS. IF THE PRESSURE DOES EXCEED 100 MICRONS IN 3 MINUTES, CHECK HOSES & CONNECTIONS FOR LEAKS & PROPER SET-UP. AND REPEAT STEPS 5 & 6. DONT PROCEED UNTIL GAUGES HAVE PROPER READINGS. RECORD THE PRESSURE AFTER 3 min.
7. RESTART THE VACUUM PUMP, CLOSE VALVE (A), OPEN VALVE (C), AND SLOWLY OPEN VALVES (G) AND (H). EVACUATE SYSTEM INTO A VACUUM AND OPEN VALVE (A). EVACUATE SYSTEM UNTIL 50 MICRONS IS ATTAINED AND HOLD FOR ONE HOUR.
8. * RECORD EVACUATION TIME & MICRON GUAGE READING. CLOSE VALVE C AND SHUT OFF VACUUM PUMP. AFTER THREE MINUTES THE PRESSURE SHOULD NOT EXCEED 300 MICRONS. RECORD MICRONS OF PRESSURE AFTER THREE MINUTES AND AFTER 5 MINUTES. DO NOT PROCEED UNTIL 300 MICRON LIMIT AFTER THREE MIN. IS ACHIEVED.
9. CLOSE ALL VALVES ((C) WILL ALREADY BE CLOSED), SHUT OFF MICRON GAUGE AND REMOVE CRANKCASE HEATERS.

CHARGING; 2ND STAGE

1. THE SECOND STAGE IS CHARGED PRIOR TO THE FIRST STAGE & THE CHARGING FOR THE SECOND STAGE IS DONE WITH THE COMPRESSOR OFF.
2. OPEN VALVES (E)(F)(G)(H) AND CRACK OPEN (D). (C) & (A) ARE CLOSED. USING VALVE (B) AS A CONTROL VALVE, CHARGE SYSTEM WITH A STATIC CHARGE OF R-170 AT AMBIENT TEMPERATURE (68° - 70° F) TO 115 PSIg.
3. WAIT 10 MINUTES FOR PRESSURE ON LOW SIDE AND HIGH SIDE TO EQUALIZE. ADD R170 TO ACHIEVE 115 PSIg IF NECESSARY AND WAIT 10 MINUTES MORE FOR PRESSURE TO EQUALIZE.
4. CLOSE ALL VALVES, REMOVE HOSES FROM VALVE CORE REMOVERS, REINSTALL CORES AND INSTALL CAPS ON ACCESS VALVES.
5. * RECORD CHARGE PRESSURE AND ABIENT TEMPERATURE. AFTER FIRST STAGE IS EVACUATED, CHARGED, SYSTEM IS RUN AND HAS BEEN SHUT DOWN FOR EIGHT HOURS, RECORD STATIC PRESSURE FOR BOTH STAGES.

* INDICATES RECORDS TO BE KEPT.

TPO 412 A DEHYDRATION AND EVACUATION PROCEDURE - FIRST STAGE.

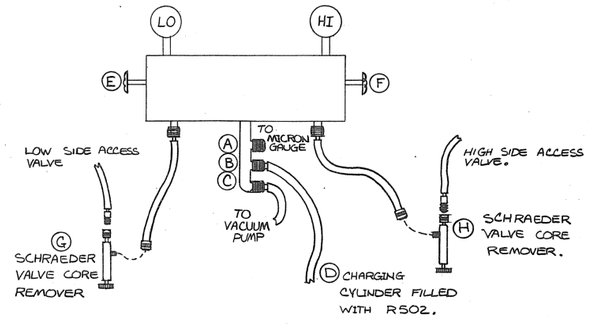

1. FOLLOW STEPS 1-9 FOR SECOND STAGE EVACUATION.

CHARGING; 1ST STAGE

1. OPEN VALVE D,E AND VALVE G AND PRESSURE SYSTEM TO 65 P.S.I.g. TURN ON FIRST STAGE COMPRESSOR AND ALLOW LIQUID TO EVAPORATE SLOWLY INTO THE COMPRESSOR. CONTINUE TO CHARGE WITH 21 ½ OUNCES OF R502 REFRIGERANT.
2. REINSTALL VALVE CORES.
3. REMOVE VALVE CORE PULLERS & INSTALL SEAL CAPS.
4. RECORD CHARGE AND AMBIENT TEMPERATURE ON CHECK-OUT LIST.

REVISIONS				
ZONE	LTR	DESCRIPTION	DATE	APPROVED

VIEW A

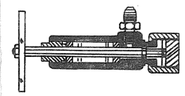

SCHRAEDER VALVE CORE REMOVER (CROSS SECTION)

			UNLESS OTHERWISE SPECIFIED DIMENSIONS ARE IN INCHES TOLERANCES ARE: FRACTIONS ± 1/64 DECIMALS .XX ± .01 .XXX ± .005 ANGLES ± 30'	
			MATERIAL	
			FINISH	
Section 6	1400620	TPO412A		
NEXT ASSY	USED ON	SYSTEM		
APPLICATION			DO NOT SCALE DRAWING	

TEMP. STOCK NO.	NOMENCLATURE OR DESCRIPTION	MFG. PART NO.	ITEM
	PARTS LIST		

CONTRACT NO.		TEMPTRONIC CORP.	
APPROVALS	DATE	TPO 412 - CHARGING PROCEDURE	
DRAWN KEN COLE	6-23-86		
CHECKED			
ENG			
UNLESS OTHERWISE SPECIFIED RESISTANCE VALUES ARE IN OHMS ± 5% WATT CAPACITANCE VALUES ARE IN ± 5% VOLTS		SIZE D / CODE IDENT NO. / DRAWING NO. 5272 / REV A	
		SCALE NONE	SHEET 1 OF 1

SECTION 7
SCHEMATIC/WIRING DIAGRAM LISTING

7-1 SCHEMATIC/WIRING DIAGRAM LISTING

This section has been reserved for schematics and wiring diagrams associated with the Model TP0412A ThermoStream® System.

Assembly	Drawing Number	Sheet	Title
Microprocessor Controller Assembly	D4145	2 of 2	Microprocessor Controller
	D4075	1 & 2	Schematic
	4088-3	-	Main Board Assembly
	C4166	1 of 3	P.C. Board Assembly
	C4171	1 of 1	Fr. Pnl. P.C.B. Schematic
	C3603	1 of 2	PC Bd. Ass. Switch Sel.
	C3612	-	Single Sel. Bd. Shematic
	C3602	-	Cont. Multiplexer Assy.
	C3600	1 of 1	Multiplexer Bd. Shematic
Power Controller Assembly	D3907	1 of 1	Power Cont. Assy. TP0412
	D4124	1 of 1	Schematic Power Cont.
	D4072-3	1 of 3	Fr. Pnl. Board Assembly
	D3997	1 of 1	Schematic Fr. Pnl. Bd.
Htr. Assy.(Pri. Ht. Exchanger)	D3902	1 of 1	Htr/Hsg Sec. Hx. Assy.
	D4107	1 of 2	Assembly Procedure
Cascade Refr. Assy. (Sec. Ht. Exchanger)	D4749	1 & 2	Assy. Insulation & Elec.
	D4754	1 of 1	Schematic Sec. Hx.

REVISIONS				
ZONE	LTR	DESCRIPTION	DATE	APPROVED

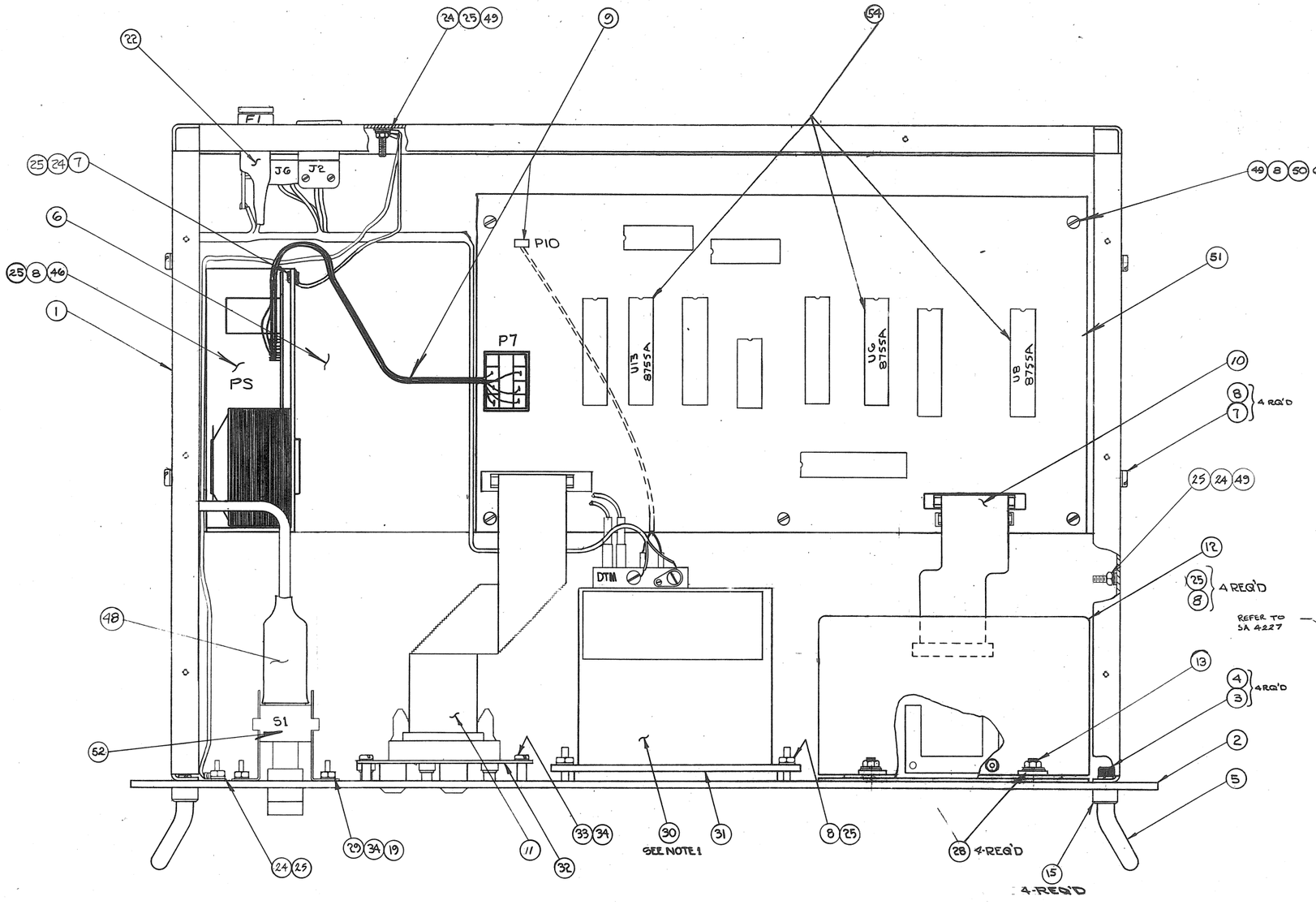

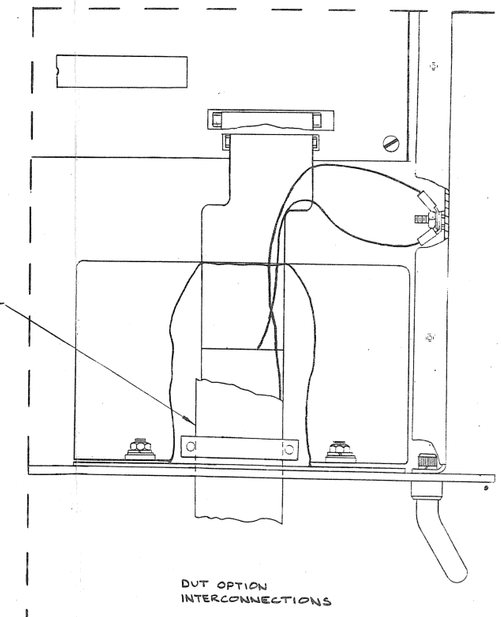

DUT OPTION INTERCONNECTIONS

TEMP. STOCK NO.	NOMENCLATURE OR DESCRIPTION	MFG. PART NO.	ITEM
	PARTS LIST		

UNLESS OTHERWISE SPECIFIED DIMENSIONS ARE IN INCHES
TOLERANCES ARE:
FRACTIONS ± 1/64 DECIMALS .XX ± .015 .XXX ± .005 ANGLES ± 30'

MATERIAL: SEE PARTS LIST

FINISH: —

DO NOT SCALE DRAWING

CONTRACT NO.

TEMPTRONIC CORP.

APPROVALS	DATE
DRAWN D. BUTCHER	4-2-84
CHECKED	4-4-84
ENG	

CHASSIS SUBASSEMBLY
MICROPROCESSOR CONTROLLER

UNLESS OTHERWISE SPECIFIED RESISTANCE VALUES ARE IN OHMS ± % WATT
CAPACITANCE VALUES ARE IN % VOLTS

SIZE	CODE IDENT NO.	DRAWING NO.	REV
D		4145	F01

SCALE 1/1 SHEET 1 OF 2

REVISIONS				
ZONE	LTR	DESCRIPTION	DATE	APPROVED
	B	ECO# 2918	1/6/86	

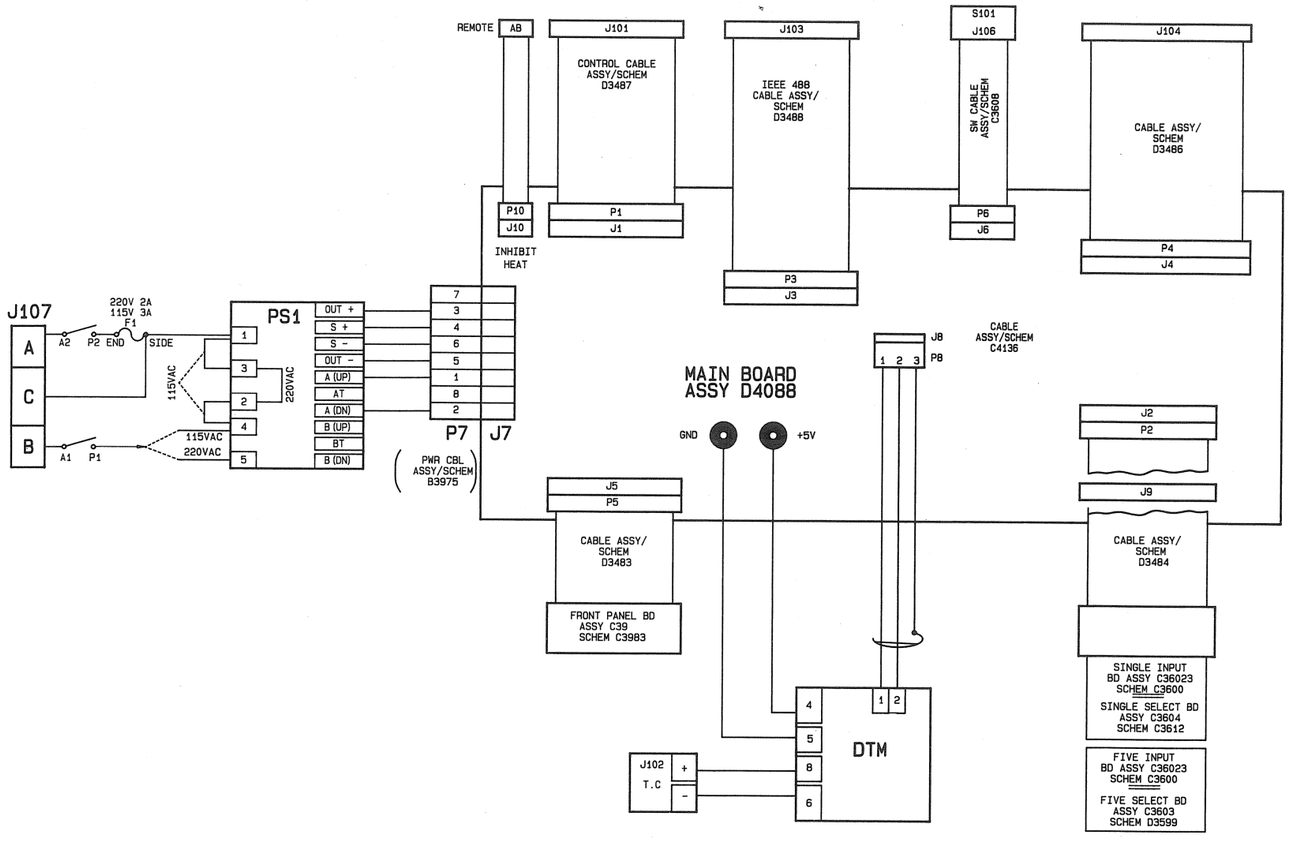

REV.	ECN. NO.	DATE
B	2918	1-9-86

TEMP. STOCK NO.	NOMENCLATURE OR DESCRIPTION	MFG. PART NO.	ITEM
	PARTS LIST		

D 3995	TCC3395	TP0412
NEXT ASSY	USED ON	SYSTEM
APPLICATION		

UNLESS OTHERWISE SPECIFIED DIMENSIONS ARE IN INCHES
TOLERANCES ARE:
FRACTIONS ± 1/64 DECIMALS .XX ± .01 .XXX ± .005 ANGLES ± 30'

MATERIAL: N/A

FINISH: N/A

DO NOT SCALE DRAWING

CONTRACT NO.

APPROVALS	DATE
DRAWN B.D.	3-22-84
CHECKED	
ENG	

UNLESS OTHERWISE SPECIFIED RESISTANCE VALUES ARE IN OHMS ± % WATT
CAPACITANCE VALUES ARE IN ± % VOLTS

TEMPTRONIC CORP.

SCHEMATIC/WIRING DIAGRAM

SIZE	CODE IDENT NO.	DRAWING NO.	REV
D		4075	E

SCALE N/A SHEET 1 OF 2

FOTOSEAM/BROOKSIDE 0225-D

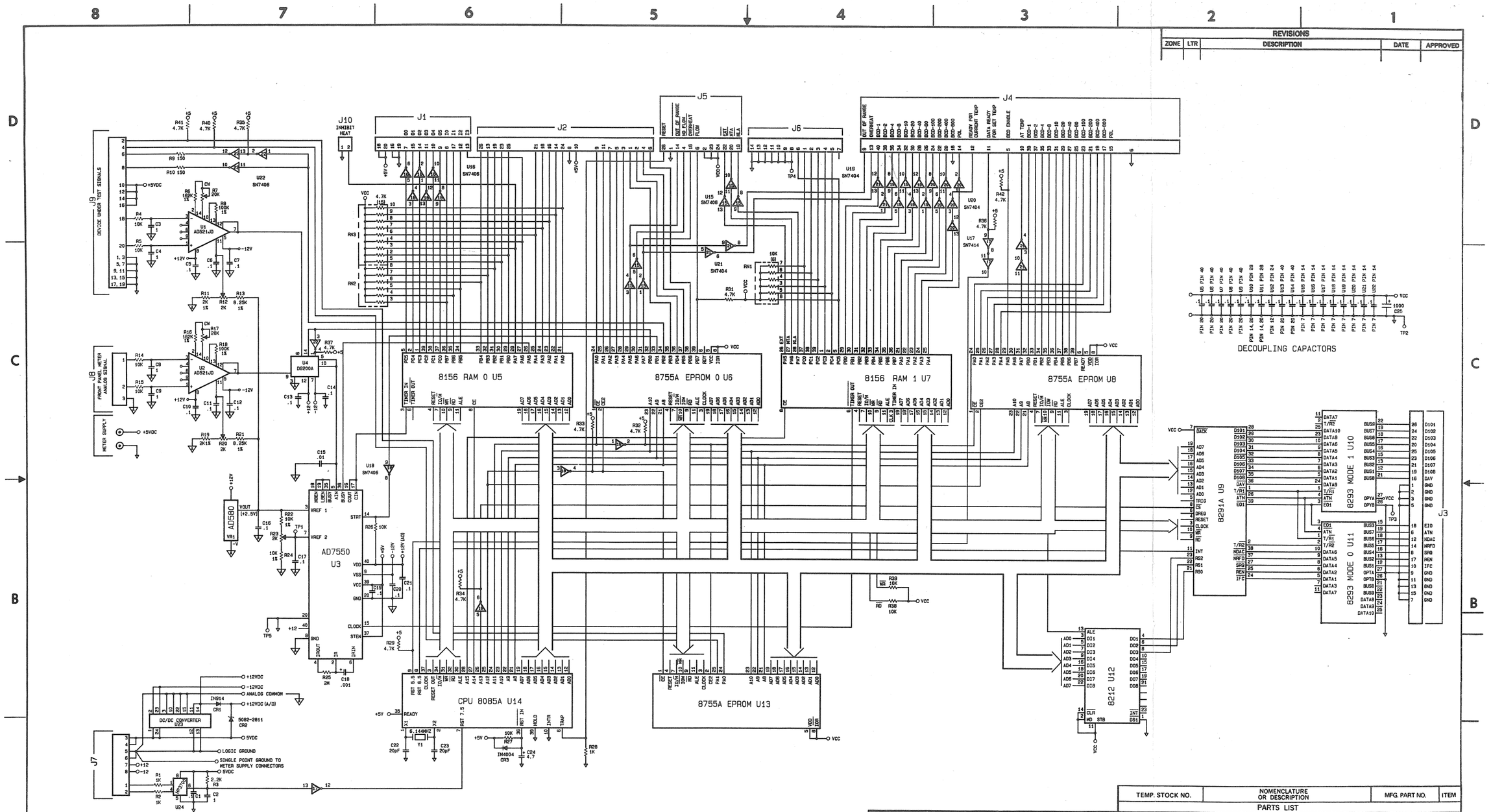

REVISIONS				
ZONE	LTR	DESCRIPTION	DATE	APPROVED

TEMP. STOCK NO.	NOMENCLATURE OR DESCRIPTION	MFG. PART NO.	ITEM

PARTS LIST

Section 7	LINSHOO	TPO412A
		TPO412
D4088	TCC3995	TPO317
NEXT ASSY	USED ON	SYSTEM
APPLICATION		

UNLESS OTHERWISE SPECIFIED DIMENSIONS ARE IN INCHES TOLERANCES ARE:
FRACTIONS ± 1/64 DECIMALS .XX ± .015 .XXX ± .005 ANGLES ± 30'

MATERIAL

FINISH

DO NOT SCALE DRAWING

CONTRACT NO.

APPROVALS	DATE
DRAWN B. DELPRETE	3-22-84
CHECKED	
[signature]	4-4-84
ENG	

UNLESS OTHERWISE SPECIFIED RESISTANCE VALUES ARE IN OHMS ± 5 % 1/4 WATT CAPACITANCE VALUES ARE IN uf ± % VOLTS

TEMPTRONIC CORP.

SCHEMATIC CONTROL BOARD

SIZE	CODE IDENT NO.	DRAWING NO.	REV
D		4075	B

SCALE NA

SHEET 2 OF 2

REVISIONS				
ZONE	LTR	DESCRIPTION	DATE	APPROVED
	A	RELEASED		

TEMPTRONICS CORP
CONTROL BOARD

ORIENTATION KEYWAY
TYPICAL, J1,2,3,4,5,6,7,9

5 PLACES
TP1 THRU TP5

2 PLACES

IN914

IN4004

3 PLACES

5 PLACES

11 PLACES

8 PLACES

2 PLACES

3 PLACES
(REF. ONLY)

3 PLACES

2 PLACES

2 PLACES

2 PLACES

2 PLACES

2 PLACES

3 PLACES

2 PLACES

2 PLACES

2 PLACES

2 PLACES

2

REVISIONS				
ZONE	LTR	DESCRIPTION	DATE	APPROVED
	A	RELEASED	5-1-84	[illegible]
	B	REVISED PER ECN 2440	6-13-84	H.O.

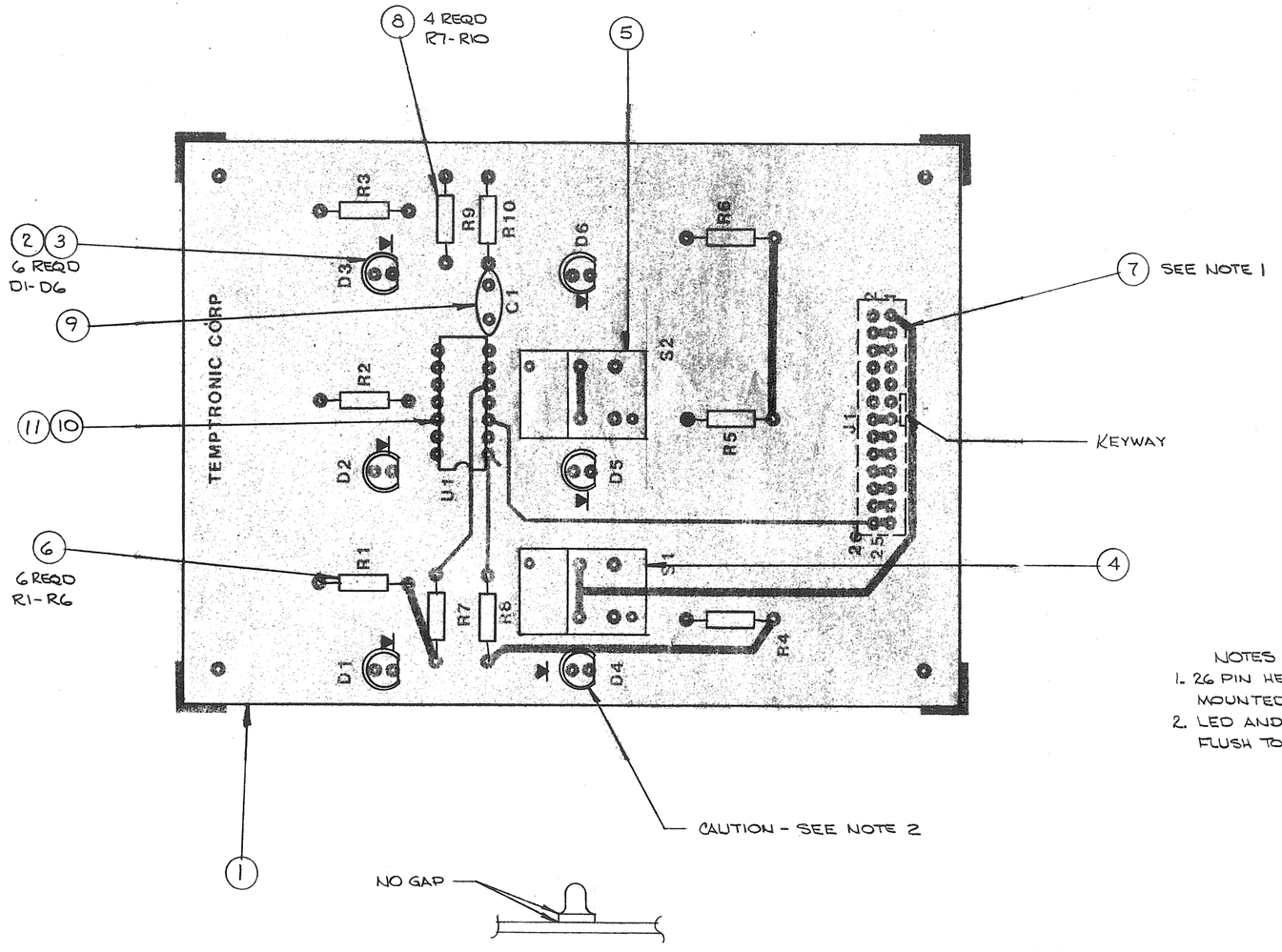

NOTES
1. 26 PIN HEADER (ITEM 7) IS TO BE MOUNTED FROM FAR SIDE
2. LED AND SPACER ITEMS 2 & 3 TO REMAIN FLUSH TO BOARD AFTER SOLDERING

TEMP STOCK NO.	NOMENCLATURE OR DESCRIPTION	MFG. PART NO.	ITEM

PARTS LIST

Section 7	LMS1400	TP0412A
D4145	TCC39956	TP0412A
NEXT ASSY	USED ON	SYSTEM

APPLICATION

UNLESS OTHERWISE SPECIFIED DIMENSIONS ARE IN INCHES TOLERANCES ARE:
FRACTIONS ± 1/64 DECIMALS .XX ± .015 .XXX ± .005 ANGLES ± 30'

MATERIAL

FINISH

DO NOT SCALE DRAWING

CONTRACT NO.

APPROVALS		DATE
DRAWN	M. ROCHE	4/26/84
CHECKED	[illegible]	5/1/84
ENG.		

UNLESS OTHERWISE SPECIFIED: RESISTANCE VALUES ARE IN OHMS ± % WATT CAPACITANCE VALUES ARE IN ± % VOLTS

TEMPTRONIC CORP

P.C. BOARD ASSEMBLY
FRONT PANEL

SIZE	CODE IDENT NO.	DRAWING NO.	REV.
C		4166	B

SCALE 2:1 SHEET 1 OF 3

REVISIONS				
ZONE	LTR	DESCRIPTION	DATE	APPROVED
	A	RELEASED	5-1-84	
	B	REVISED PER ECN # 2459	6-26-84	DEB

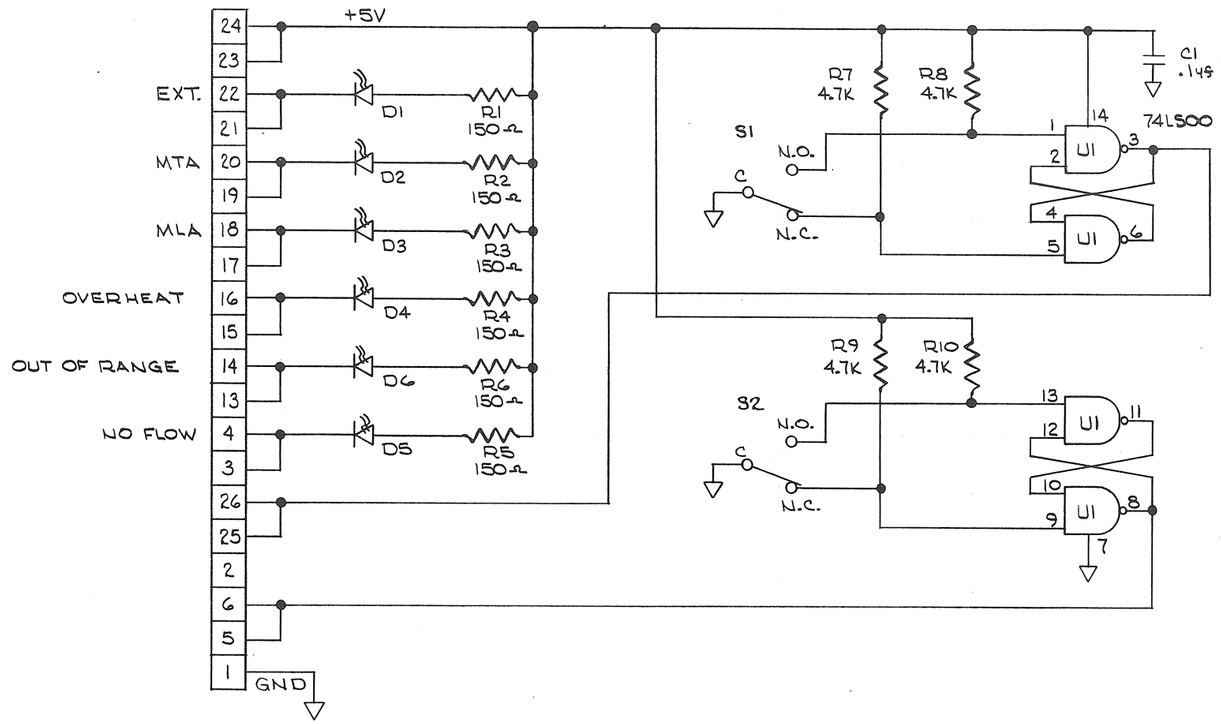

NOTE
1. S1 & S2 FRONT PANEL MOUNTED, MOMENTARY PUSH BUTTON.

TEMP STOCK NO.	NOMENCLATURE OR DESCRIPTION	MFG. PART NO.	ITEM
	PARTS LIST		

Section 7	LM61400	TP0412A
C 4166.	PC41663	TP0412A
NEXT ASSY	USED ON	SYSTEM
APPLICATION		

UNLESS OTHERWISE SPECIFIED DIMENSIONS ARE IN INCHES
TOLERANCES ARE:
FRACTIONS ± 1/64 DECIMALS .XX ± .015 .XXX ± .005 ANGLES ± 30'

MATERIAL

FINISH

DO NOT SCALE DRAWING

CONTRACT NO.

APPROVALS	DATE
DRAWN M. Boche	4/27/84
CHECKED	5/1/84
ENG.	

UNLESS OTHERWISE SPECIFIED:
RESISTANCE VALUES ARE IN OHMS ± % WATT
CAPACITANCE VALUES ARE IN ± % VOLTS

TEMPTRONIC CORP

FRONT PANEL P.C.B.
SCHEMATIC

SIZE	CODE IDENT NO.	DRAWING NO.	REV.
C		4171	B

SCALE 2:1 SHEET 1 OF 1

REVISIONS				
ZONE	LTR	DESCRIPTION	DATE	APPROVED
	A	REVISED PER ECN 2257	11-9-83	D.O.
	B	REVISED PER ECN 2385	4-11-84	D.O
	C	ECO # 3603C	6-30-87	

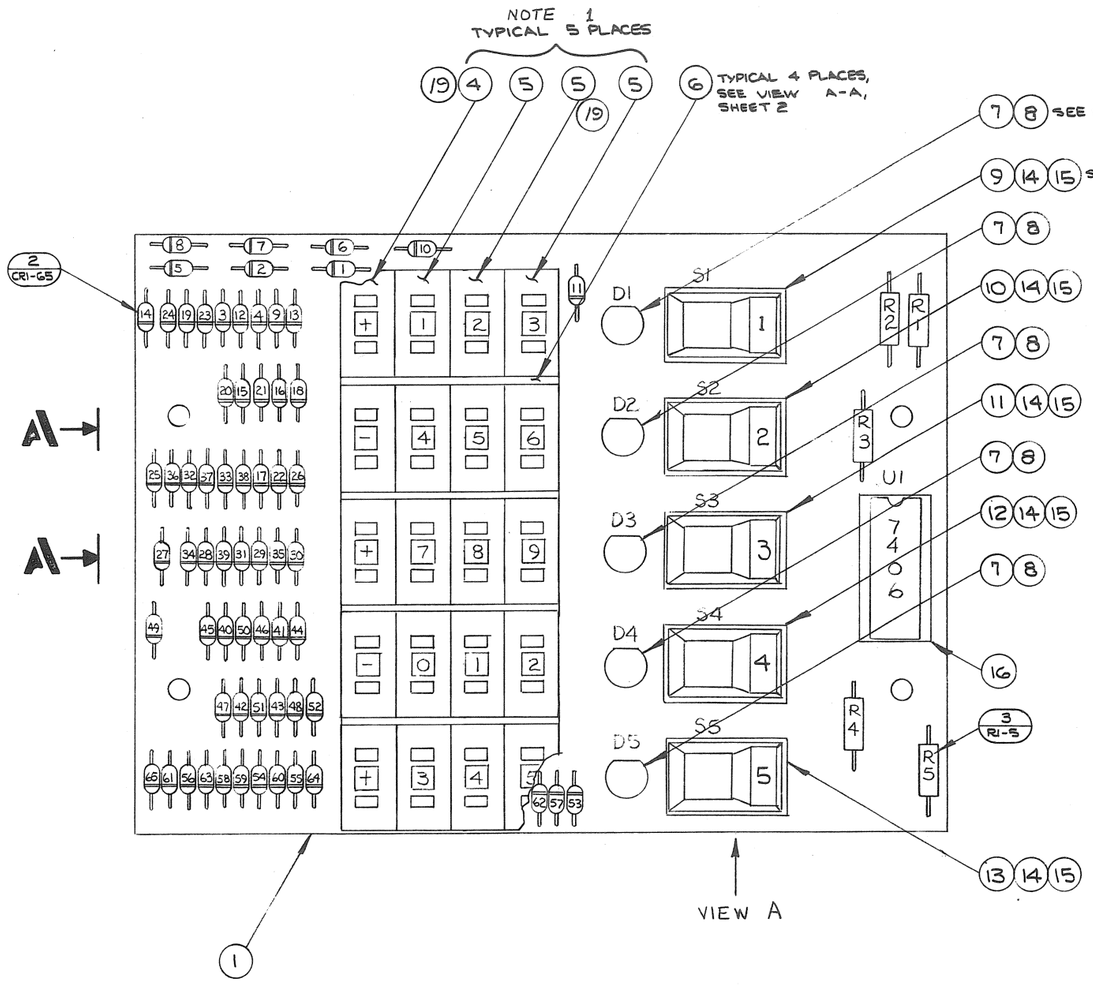

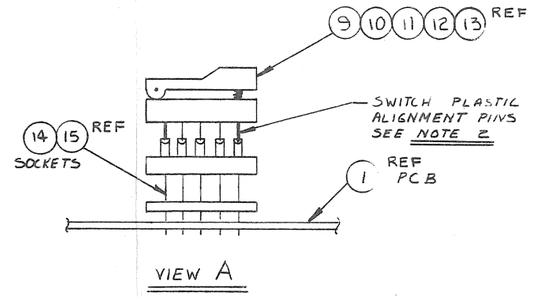

NOTES:

1. THE PUSHBUTTON INDEXING SWITCHES (4) & (5) AND SELECTION SWITCHES (9) THRU (13), ARE HIGHLY SUSCEPTIBLE TO CONTACT CORROSION FROM BOARD CLEANING AGENT. SPECIAL CARE MUST BE GIVEN TO ASSURE THIS CONTAMINATION DOES NOT OCCUR.
2. THE SWITCHES (9) THRU (13) HAVE PLASTIC LOCATOR PINS. THESE PINS MUST BE INSTALLED INTO THE SOCKET TO ASSURE PROPER ALIGNMENT OF SWITCHES TO FRONT PANEL.

TEMP STOCK NO.	NOMENCLATURE OR DESCRIPTION	MFG. PART NO.	ITEM
	PARTS LIST		

Section 7	LM5140G	TP0412A
D3216	TQC3588	TP3178
NEXT ASSY	USED ON	SYSTEM
APPLICATION		

UNLESS OTHERWISE SPECIFIED DIMENSIONS ARE IN INCHES
TOLERANCES ARE:
FRACTIONS ± 1/64 DECIMALS .XX ± .015 .XXX ± .005 ANGLES ± 30'

MATERIAL: SEE P/L

FINISH:

DO NOT SCALE DRAWING

CONTRACT NO.

APPROVALS	DATE
DRAWN D.BUTCHER	3.31.82
CHECKED	5-20-82
ENG. EAL	5/20/82

UNLESS OTHERWISE SPECIFIED: RESISTANCE VALUES ARE IN OHMS ± % WATT
CAPACITANCE VALUES ARE IN ± % VOLTS

TEMPTRONIC CORP

P.C. BOARD ASSEMBLY
5 SWITCH SELECT

SIZE	CODE IDENT NO.	DRAWING NO.	REV.
C		3603	C

SCALE 2/1 SHEET 1 OF 2

REVISIONS				
ZONE	LTR	DESCRIPTION	DATE	APPROVED
	B	ECN 2932	2186	MMP

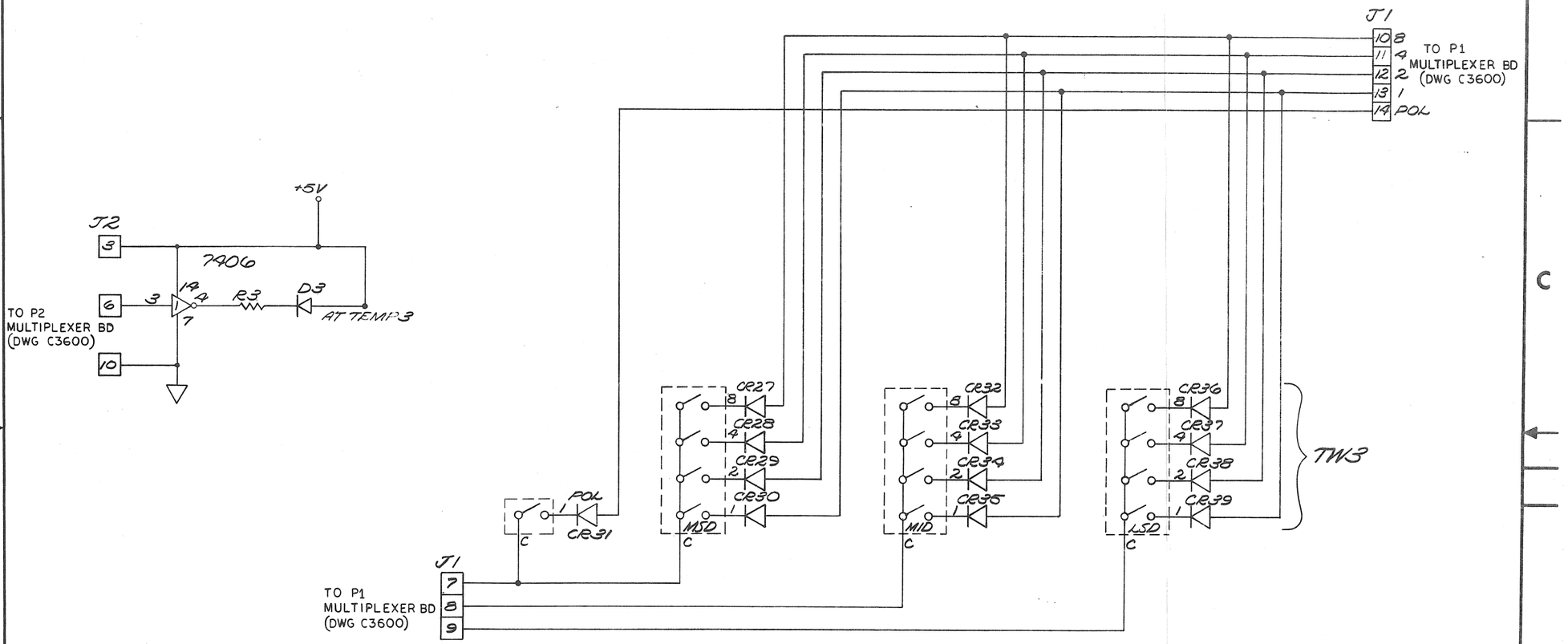

NOTES
1-CR27-CR39, IN914 OR EQUIVALENT

TEMP STOCK NO.	NOMENCLATURE OR DESCRIPTION	MFG. PART NO.	ITEM
	PARTS LIST		

		TP0412A
D3995	TCC3995	TP0317
Section 7	LMSHOD	TP0412A
C3604	TCC-3588	TP317B
NEXT ASSY	USED ON	SYSTEM
APPLICATION		

UNLESS OTHERWISE SPECIFIED DIMENSIONS ARE IN INCHES
TOLERANCES ARE:
FRACTIONS ± 1/64 DECIMALS .XX ± .015 .XXX ± .005 ANGLES ± 30'
MATERIAL
FINISH
DO NOT SCALE DRAWING

CONTRACT NO.

APPROVALS	DATE
DRAWN	5-30-82
CHECKED	
ENG	5/20/82

UNLESS OTHERWISE SPECIFIED:
RESISTANCE VALUES ARE IN OHMS ± % WATT
CAPACITANCE VALUES ARE IN ± % VOLTS

TEMPTRONIC CORP

SINGLE SELECT BRD. SCHEMATIC

SIZE	CODE IDENT NO.	DRAWING NO.	REV.
C		3612	B

SCALE NONE SHEET 1 OF 1

REVISIONS				
ZONE	LTR	DESCRIPTION	DATE	APPROVED
	A	REVISED PER DCN 1860	7/29/82	M.O.
	B	REVISED PER ECN 2392	4-18-84	M.O.

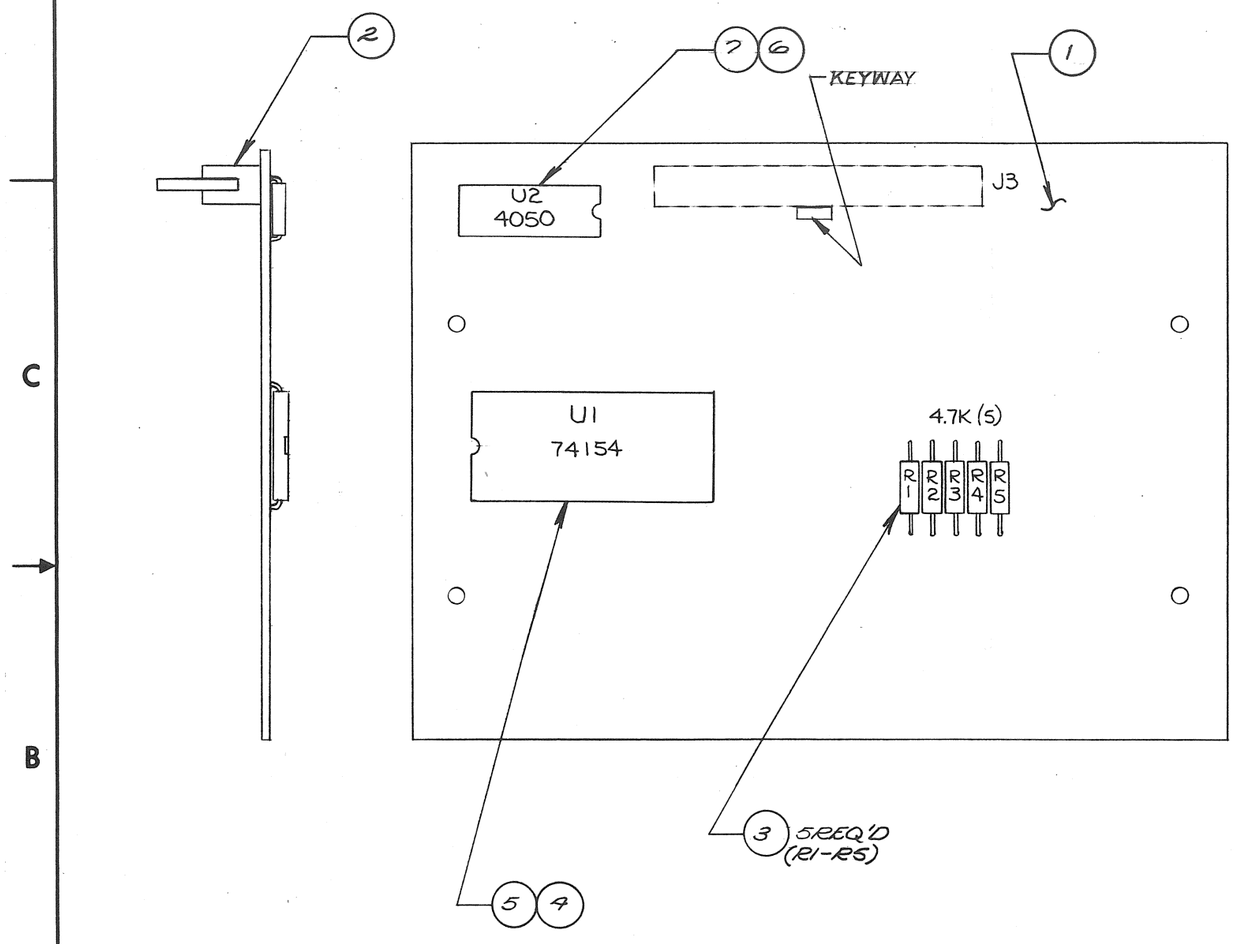

TEMP STOCK NO.	NOMENCLATURE OR DESCRIPTION	MFG. PART NO.	ITEM
	PARTS LIST		

UNLESS OTHERWISE SPECIFIED DIMENSIONS ARE IN INCHES
TOLERANCES ARE:
FRACTIONS ± 1/64 DECIMALS .XX ± .015 .XXX ± .005 ANGLES ± 30'

MATERIAL

FINISH

DO NOT SCALE DRAWING

APPLICATION		
NEXT ASSY	USED ON	SYSTEM
Section 7	LM81400	TP04128
D3590	TCC3580	TP03178

CONTRACT NO.

APPROVALS	DATE
DRAWN LDR	4/12/82
CHECKED M.O.	5-20-82
ENG.	
EAC	5/20/82

UNLESS OTHERWISE SPECIFIED:
RESISTANCE VALUES ARE IN OHMS ± % WATT
CAPACITANCE VALUES ARE IN ± % VOLTS

TEMPTRONIC CORP

CONTROLLER MULTIPLEXER ASSEMBLY

SIZE	CODE IDENT NO.	DRAWING NO.	REV.
C		3602	B

SCALE | SHEET OF

REVISIONS				
ZONE	LTR	DESCRIPTION	DATE	APPROVED
	B	ECO #2932	2/86	MPF

4-LINE TO 16 LINE DECODER/DEMULTIPLEXER

INTERCONNECTING CABLE ASSY SA3484 TO MAIN BD J2 (SCHEM D4011 SHEET 2)

74154 U1

U2 J3 (1, 2, 4, 6) → A, B, C, D (23, 22, 21, 20)

U1 G1 (18), G2 (19) → +5V

U1 (12) → GND

U1 (24) → +5V

U1 Ø, 1, 2, 3, 4, 5, 6, 7, 8, 9, 10, 11, 12, 13, 14, 15 → P1 (1, 2, 3, 4, 5, 6, 7, 8, 9, 15, 16, 17, 18, 19, 20)

U2 J3 (10) → +5V → P2 (3)

U2 (9, 11, 7, 5, 3) → U4 (16, 18, 21, 14, 24) → P2 (8, 11, 12, 2, 1)

U2 J3 (8) → GND → P2 (10)

REFERENCE INFORMATION
SWITCH SELECT BOARD SCHEMATIC
(SINGLE SELECT DWG #3612)
(5 SWITCH SELECT DWG #3599)

J1: 1, 3, 4, 6, 7, 8, 9, 15, 16, 17, 18, 19, 20 → TW1, ----, TW2, ----, TW3, ----, TW4, ----, TW5

J2: 3, 5, 4, 6, 7, 9, 1, 2, 8, 11, 12, 10 → AT TEMP INDICATORS (1), (2), (3), (4), (5); SELECT SWITCHES (S1), (S2), (S3), (S4), (S5)

J1: 10, 11, 12, 13, 14

+5V → 4.7K(5) R1 → P1 (10) → 8; 14, 15 → J3 (13)

+5V → R2 → 11 → 4; 3, 2 → (19)

+5V → R3 → 12 → 2; 11, 12 → (23)

+5V → R4 → 13 → 1; 9, 10 → (25)

+5V → R5 → 14 → POL; 7, 6 → (26)

4050 U2

INTERCONNECTING CABLE ASSY SA3484
TOMAIN BOARD J2 (U4)
SET TEMPERATURE INPUT (BCD)
(SCHEM D4011 SHEET 2)

TEMP STOCK NO.	NOMENCLATURE OR DESCRIPTION	MFG. PART NO.	ITEM
	PARTS LIST		

		TP0412A
D3995	TCC3995	TP0317
Section 7	LM5400	TP0412A
C3602	TCC3588	TP3178
NEXT ASSY	USED ON	SYSTEM
APPLICATION		

UNLESS OTHERWISE SPECIFIED DIMENSIONS ARE IN INCHES
TOLERANCES ARE:
FRACTIONS ± 1/64 DECIMALS .XX ± .015 .XXX ± .005 ANGLES ± 30'
MATERIAL
FINISH
DO NOT SCALE DRAWING

CONTRACT NO.

APPROVALS	DATE
DRAWN K.G.	1-4-82
CHECKED	
ENG	5/20/82

UNLESS OTHERWISE SPECIFIED:
RESISTANCE VALUES ARE IN OHMS ± % WATT
CAPACITANCE VALUES ARE IN ± % VOLTS

TEMPTRONIC CORP

MULTIPLEXER BOARD SCHEMATIC

SIZE	CODE IDENT NO.	DRAWING NO.	REV.
C		3600	B

SCALE | SHEET 1 OF 1

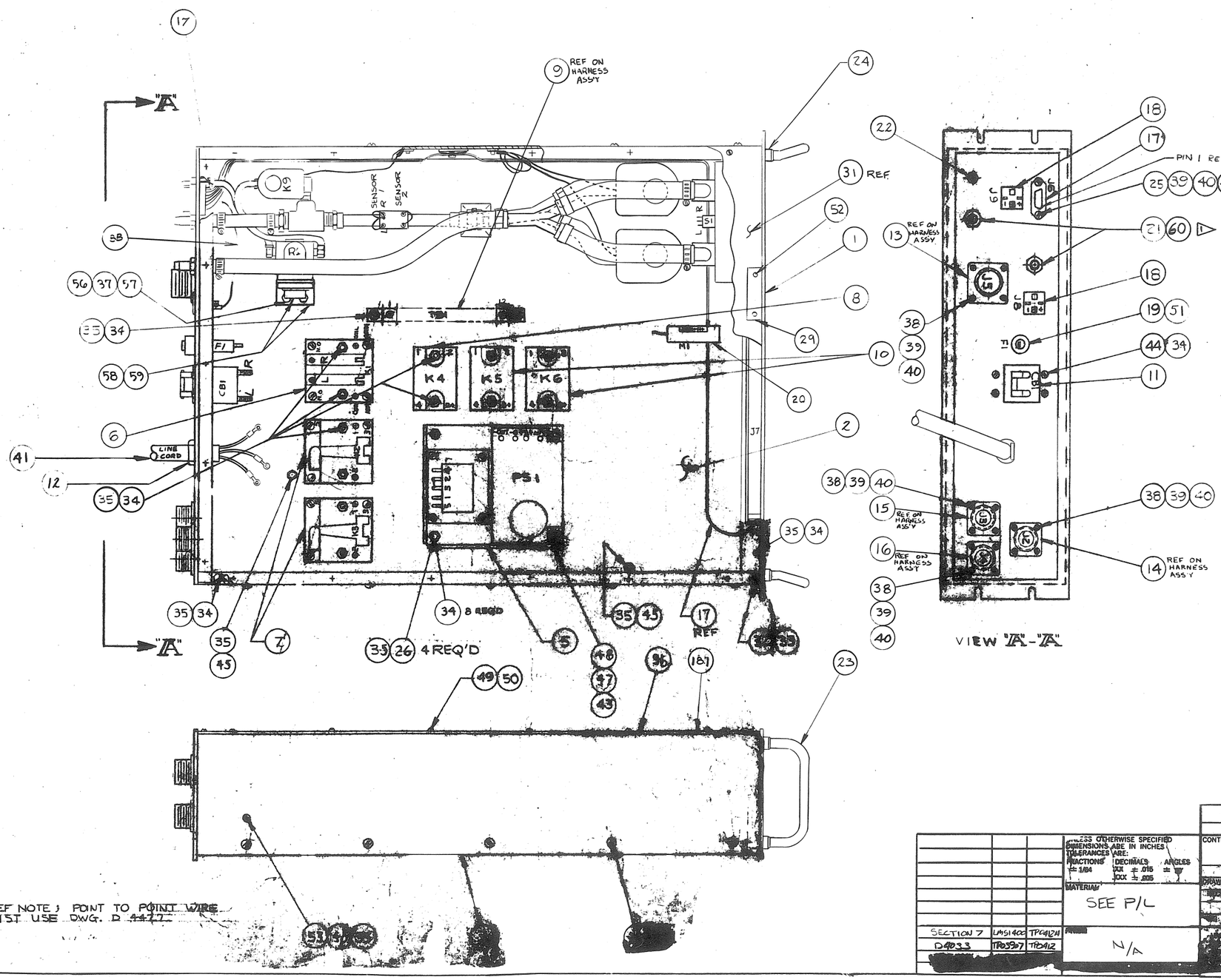

REF NOTE: POINT TO POINT WIRE LIST USE DWG. D 4477

REVISIONS				
ZONE	LTR	DESCRIPTION	DATE	APPROVED
	A	INITAL RELEASE		
	B	REVISED PER ECN 2311	1/16/84	[illegible]
	C	REVISED PER ECN 2353	2-2-84	[illegible]
	D	REVISED PER ECN 2370	3-15-84	[illegible]
	E	REVISED PER ECN 2420	[illegible]	[illegible]
	F	REVISED PER ECN 2466	7-12-84	[illegible]
	G	REVISED PER ECN 2499	[illegible]-8-84	[illegible]
	H	REVISED PER ECN # 2506	8-14-84	[illegible]
	J	ECN# 2531	[illegible]	[illegible]
	K	ECN# 2616	1-1-85	[illegible]
	L	ECN # 2646 (P/L ONLY)	[illegible]	[illegible]
	M	REVISED PER ECN # 2707	3-3-85	[illegible]
87.5	N	REVISED PER ECN 2812	[illegible]	[illegible]
	P	REVISED PER ECN 2912	12/85	[illegible]
	R	REVISED PER ECN 3061	5-15-86	PB
	S	REVISED PER ECN 3907S	6-18-86	PB
	T	REDRAWN PER ECN # 3907T	2-3-87	PB
	U	REVISED PER ECN#3907U	2-26-87	PB
	V	REC ECN 3907V	3-25-87	[illegible]

NOTE:
1. USE ½ WASHER (ITEM 60) ON REAR SIDE OF PANEL AS REQUIRED.
2. MOUNT M1 AS CLOSE TO FRONT PANEL AS WIRE LEADS WILL ALLOW.
3. USE SHEETS 3 & 4 TO INSTALL & LOCATE TIE POINTS FOR HARNESS WHEN REQ'D

TEMP. STOCK NO.	NOMENCLATURE OR DESCRIPTION	MFG. PART NO.	ITEM
	PARTS LIST		

SECTION 7	LMS1400	TPO412A
D4033	TPO3907	TPO412
[redacted]		

UNLESS OTHERWISE SPECIFIED DIMENSIONS ARE IN INCHES TOLERANCES ARE: FRACTIONS ± 1/64 DECIMALS .XX ± .015 .XXX ± .005 ANGLES ± 1°

MATERIAL: SEE P/L

FINISH: N/A

CONTRACT NO.

APPROVALS	DATE
DRAWN J.G. HENDERSON	11-30-83
CHECKED [illegible]	2-21-84
[illegible]	2-21-84

UNLESS OTHERWISE SPECIFIED DIMENSIONS & VALUES ARE IN [illegible]

TEMPTRONIC CORP.

POWER CONTROLLER ASSEMBLY (TPO 412)

SIZE	CODE IDENT NO.	DRAWING NO.	REV
D		3907	V

SHEET 1 OF 4

REVISIONS				
ZONE	LTR	DESCRIPTION	DATE	APPROVED
	D	ECN # 4124-D	8-2-85	JLW

REV	ECN NO	DATE
A	RELEASED	
B	2401	5-2-84
C	2812	9-10-85
D	4124-D	

P2 AC INPUT REF. POWER CABLE ASSY.#SA
J2 CONTROLLER
J3 STAND
J4 AIR DRYER
J5 SECONDARY HT.EX.
J6 CONTROL CABLE CONN.14 PIN REF.DWG#
J7 PCB CONNECTOR
J8 TC CONN. SECONDARY HT.EX.
J9 TC CONN. CONTROLLER

K1 MAIN POWER CONTACTOR
K2 1ST STAGE COMPRESSOR
K3 2ND STAGE COMPRESSOR
K4 HEATER
K5 TEST SOLENOID CONTROL
K6 TRANSITION SOLENOID CONTROL

CB1 CIRCUIT BREAKER
F1 DC POWER SUPPLY FUSE
S1 MODE SWITCH HT/CL HT ONLY
SENSOR 1 AIR STREAM THERMISTOR
SENSOR 2 BLOCK THERMISTOR
P1 CONT.CA.ASSY.20 PIN CONN.REF.DWG #
PS1 DC POWER SUPPLY
M1 ELAPSED TIME METER
TB1 TERMINAL STRIP
PCB1 FRONT PANEL BRD ASSY.REF SCHEM #D3997

J1 PRINTED CIRCUIT
PCB1 BOARD CONNECTOR

K7 TEST SOLENOID VALVE
K8 TRANSITION SOLENOID VALVE
K9 STAND SOLENOID VALVE
MOV VARISTOR

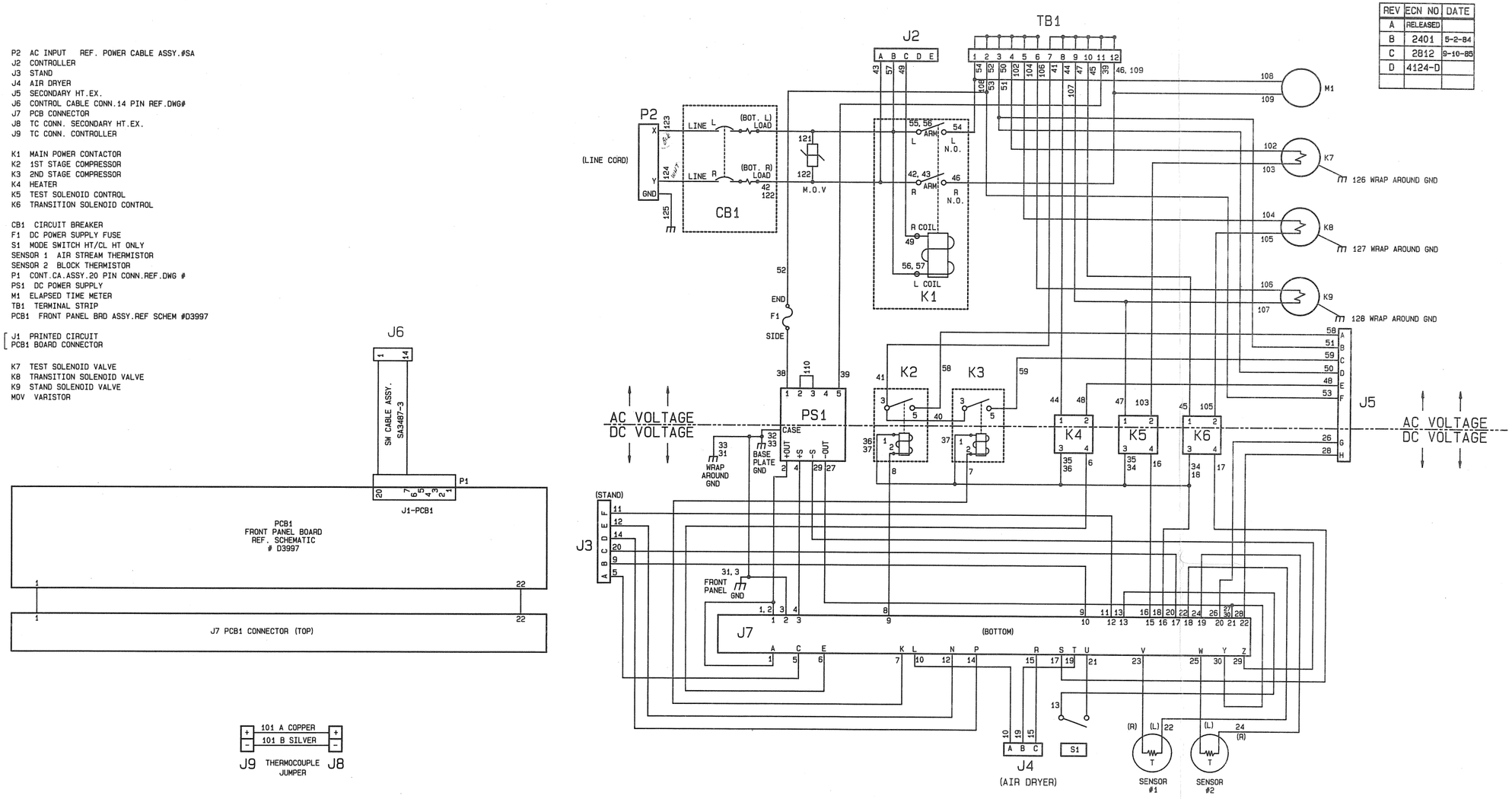

TEMP. STOCK NO.	NOMENCLATURE OR DESCRIPTION	MFG. PART NO.	ITEM

PARTS LIST

UNLESS OTHERWISE SPECIFIED DIMENSIONS ARE IN INCHES TOLERANCES ARE:
FRACTIONS ± 1/64 DECIMALS .XX ± .01 .XXX ± .005 ANGLES ± 30'

MATERIAL

FINISH

NEXT ASSY	USED ON	SYSTEM
APPLICATION		

DO NOT SCALE DRAWING

CONTRACT NO.

APPROVALS		DATE
DRAWN	J. STRAK	8-26-85
CHECKED	K. Woodman	8-12-85
ENG	JIM C.	[illegible]

UNLESS OTHERWISE SPECIFIED RESISTANCE VALUES ARE IN OHMS ± % WATT CAPACITANCE VALUES ARE IN ± % VOLTS

TEMPTRONIC CORP.

SCHEMATIC
POWER CONT.

SIZE	CODE IDENT NO.	DRAWING NO.	REV
D		4124	D

SCALE 1/4 SHEET 1 OF 1

FOTOBEAM/BROOKSIDE 0228-D

REVISIONS				
ZONE	LTR	DESCRIPTION	DATE	APPROVED
	B	REVISED PER ECN#2390	3-22-84	JC
	C	REVISED PER ECN#2463	7-11-84	BD
	D	REVISED PER ECN #2477	7-24-84	Jim C
	E	REVISED PER ECN # 2490	8-7-84	OCB
	F	REVISED PER ECN 2565 (P/L ONLY)	10-31-84	M.O.
	G	REVISED PER ECN 2580	11-9-84	M.O.
	H	REVISED PER ECN 2591	12-6-84	M.O.
	J	REVISED PER ECN 2653	3-14-85	M.O.
	K	REVISED PER ECN # 3036	4-86	PB
	L	REVISED PER ECN # 4072	7-30-86	PB
	M	REVISED PER ECN # 4072M	8-14-86	PB
	N	REVISED PER ECN # 4072N (P/L ONLY)	10-19-87	MJM

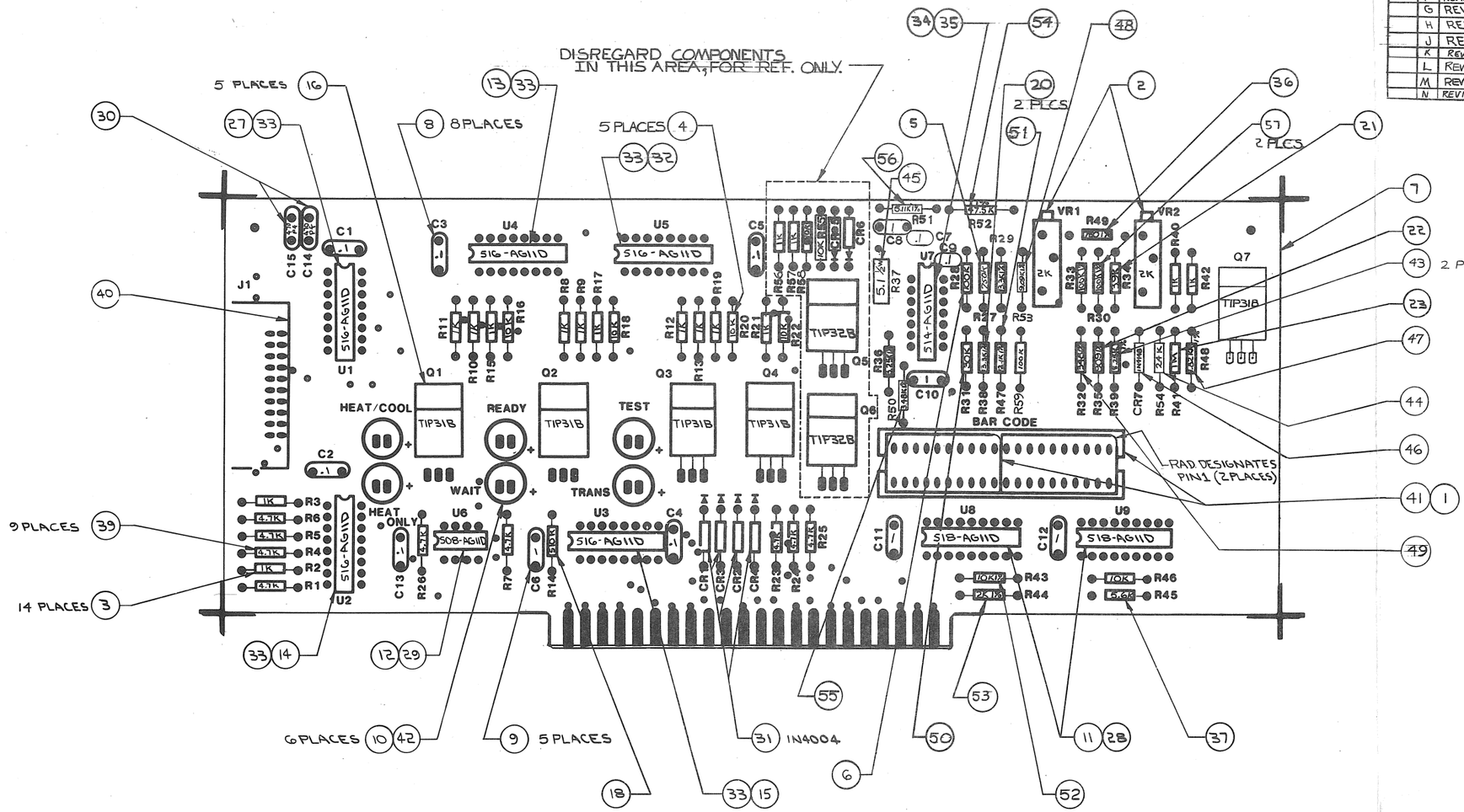

NOTES:
1. TO BE BAGGED BY VENDOR / ASSEMBLER.

Section 7	LM324N	TL084CN			
2171	TIP31B	TIP32B			
NEXT ASSY	USED ON	SYSTEM			
APPLICATION					

UNLESS OTHERWISE SPECIFIED DIMENSIONS ARE IN INCHES
TOLERANCES ARE:
FRACTIONS ± 1/64 DECIMALS .XX ± .015 .XXX ± .005 ANGLES ± 30'

MATERIAL

FINISH

DO NOT SCALE DRAWING

TEMP STOCK NO	NOMENCLATURE OR DESCRIPTION	MFG PART NO	ITEM
	PARTS LIST		

CONTRACT NO.

TEMPTRONIC CORP.

APPROVALS	DATE
DRAWN B. DELPRETE	3-15-84
CHECKED Jim C	7-24-84
ENG Jim C	7-24-84

FRONT PANEL BOARD ASSY (SHT 3 ARTWORK)

UNLESS OTHERWISE SPECIFIED RESISTANCE VALUES ARE IN OHMS: 5 % 1/4 WATT CAPACITANCE VALUES ARE IN µF: 20 % VOLTS

SIZE	CODE IDENT NO.	DRAWING NO.	REV
D		4072-3	N

SCALE 2:1 SHEET OF

REVISIONS				
ZONE	LTR	DESCRIPTION	DATE	APPROVED
	E	ECO 3R1	7/86	

REV.	ECN.NO	DATE
E	3121	7/10/86

REF.ONLY

R8 1K READY
R9 1K WAIT
R10 1K HEAT ONLY
R11 1K HEAT/COOL
R12 1K TEST
R13 1K TRNSN
4049UB U4 · 4050B U5 · 4049UB U4 · 4090B U5 · 4050B U9

R58 10K · R57 1K · Q5 TIP32B · CR6 1N4004 · R55 10K · R56 1K · Q6 TIP32B · CR5 1N4004

CR4 1N4004 · CR2 1N4004 · CR3 1N4004 · CR1 1N4004

+12VDC

J1

R1 4.7K · R2 1K · R3 1K · R4 4.7K · R5 4.7K · R6 4.7K

C1 .1 · C14 470PF · C15 · C2 .1 · C3 .1 · C5 .1

U1 4099B
9 SAFETY
10 TEST
11 TRANSITION
12 COMP.#1
13 COMP.#2
14 STAND
15 WAIT/READY
1 DRIER

U2 4512B
1 LOW FLOW
2 SAFETY RTN
3 MODE
4 STAND
5 FOOT SW ENABLE
6 FOOT SW
7 SPARE
9 SPARE

R7 4.7K · U6 40107B

U3 4049BB · R14 510K · C4 .1 · C6 1 · C13 .1 · R26 4.7K · U6 40107B

U4 4049UB

R50 3.48K 1% · R31 30K · R53 9.09K 1% · C10 1 · R36 8.25K 1% · C9 .1 · R27 750K · R47 12.1K 1% · R49 750 1% · VR2 2K · R30 100K 1% · R33 100K 1% · R35 909 1% · C8 1 · R37 * 5.1 1/2W · R28 100K · TIP31B Q7 · R51 5.11K 1% · R52 47.5K 1% · R59 100K · VR1 2K · R29 13.3K 1% · C7 .1 · R38 13.3K 1% · R32 348 1% · CR7 1N4148 · R54 24K · R34 39K · R39 8.25K 1% · R40 1K · R48 1.82K 1% · R41 1M · R42 1K · LM324 U7

2CFM · 12CFM

MV57164 · MV57164

U8 LM3914 · U9 LM3914

C11 1 · C12 1

R43 10K 1% · R44 2K 1% · R45 5.6K · R46 10K

U5 4050B
R15 1K · R16 10K · Q1 TIP31B
R17 1K · R18 10K · Q2 TIP31B
R19 1K · R20 10K · Q3 TIP31B
R21 1K · R22 10K · Q4 TIP31B

R23 4.7K · R24 4.7K · R25 4.7K

+12VDC
1/A
B/C
11/M
16/T
20/X
F
6
15 TEST AIR RELAY
5 TRANSITION AIR RELAY
9 COMP #1
K COMP #2 RELAY
10 STAND SOLENOID
L DRIER SOLENOID
LOW=HEAT ONLY
13 MODE SWITCH
P STAND SWITCH
N FOOT SW ENABLE
12 FOOT SWITCH
E HEATER RELAY

J2
2/B
4/D
8/J
14/R
17/U
21/Y
22/Z
GROUND

PART OF J2

NOTE:
* USE METAL OXIDE FILM ONLY

TEMP. STOCK NO.	NOMENCLATURE OR DESCRIPTION	MFG. PART NO.	ITEM
	PARTS LIST		

UNLESS OTHERWISE SPECIFIED DIMENSIONS ARE IN INCHES
TOLERANCES ARE:
FRACTIONS ± 1/64 · DECIMALS .XX ± .01, .XXX ± .005 · ANGLES ± 30'

MATERIAL

FINISH

DO NOT SCALE DRAWING

NEXT ASSY	USED ON	SYSTEM
APPLICATION		

CONTRACT NO.

TEMPTRONIC CORP.

APPROVALS	DATE
DRAWN B DELPRETE	7-25-84
CHECKED	
ENG	

SCHEMATIC
FRONT PANEL BRD

UNLESS OTHERWISE SPECIFIED
RESISTANCE VALUES ARE IN OHMS ± % WATT
CAPACITANCE VALUES ARE IN ± % VOLTS

SIZE	CODE IDENT NO.	DRAWING NO.	REV
D		3997	E

SCALE 1) /A · SHEET 1 OF 1

FOTOBEAM/BROOKSIDE 0228-D

REVISIONS				
ZONE	LTR	DESCRIPTION	DATE	APPROVED
	A	RELEASED	3-22-84	JC
	B	REVISED PER ECN 2469	7/19/84	H.O
	C	REVISED PER ECN # 2607	1-10-85	MAP
	D	ECN # 2679	5-2-85	JC
	E	REVISED PER ECN # 2728	6-18-85	JC
	F	REVISED PER ECN 2924	1/86	PB

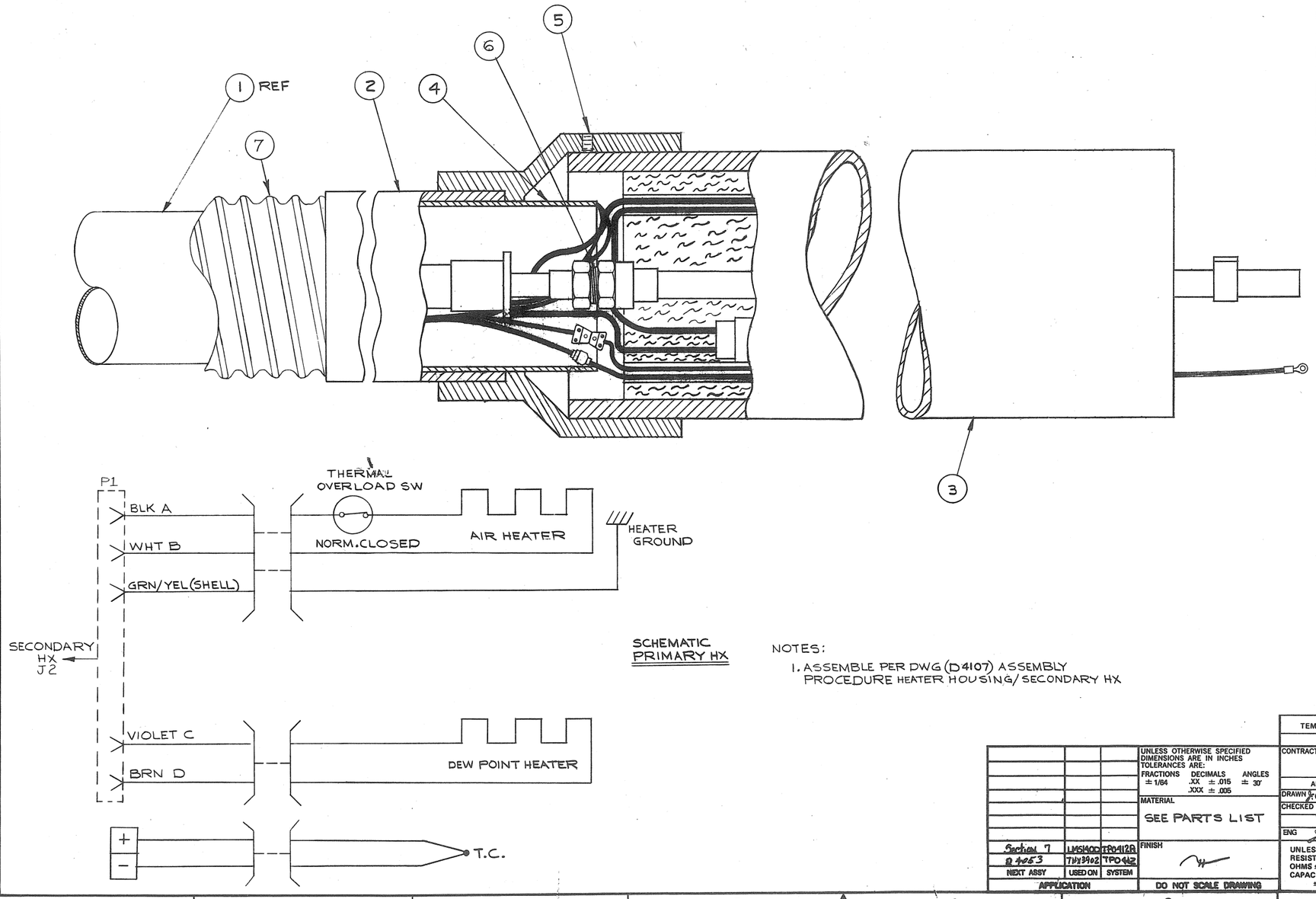

SCHEMATIC PRIMARY HX

NOTES:

1. ASSEMBLE PER DWG (D4107) ASSEMBLY PROCEDURE HEATER HOUSING/SECONDARY HX

TEMP. STOCK NO.	NOMENCLATURE OR DESCRIPTION	MFG. PART NO.	ITEM

PARTS LIST

NEXT ASSY	USED ON	SYSTEM
Section 7	LMS140D	TP0412A
D 4053	THX3902	TP0412

APPLICATION

UNLESS OTHERWISE SPECIFIED DIMENSIONS ARE IN INCHES TOLERANCES ARE:
FRACTIONS ± 1/64 DECIMALS .XX ± .015 .XXX ± .005 ANGLES ± 30'

MATERIAL: SEE PARTS LIST

FINISH

DO NOT SCALE DRAWING

CONTRACT NO.

APPROVALS	DATE
DRAWN J.C. Henderson	1-12-84
CHECKED Jim C	2-22-84
ENG Jim C	2-22-84

UNLESS OTHERWISE SPECIFIED RESISTANCE VALUES ARE IN OHMS ± % WATT CAPACITANCE VALUES ARE IN ± % VOLTS

TEMPTRONIC CORP.

HEATER HOUSING/SECONDARY HX. ASSEMBLY

SIZE	CODE IDENT NO.	DRAWING NO.	REV
D		3902	F

SCALE 1½" = 1" SHEET 1 OF 1

REVISIONS				
ZONE	LTR	DESCRIPTION	DATE	APPROVED
	A	RELEASED	3-29-84	JC
	B	ECN # 2679	5-2-85	JC

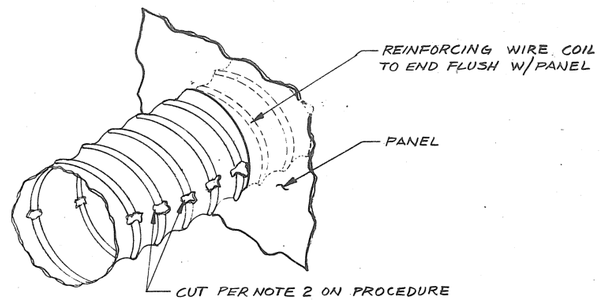

DETAIL "A"
NO SCALE

TEMP. STOCK NO.	NOMENCLATURE OR DESCRIPTION	MFG. PART NO.	ITEM
	PARTS LIST		

Section 8	LM8M60TT04120	
D3902	TM1X902	TF04X2
NEXT ASSY	USED ON	SYSTEM
APPLICATION		

UNLESS OTHERWISE SPECIFIED DIMENSIONS ARE IN INCHES
TOLERANCES ARE:
FRACTIONS ± 1/64 DECIMALS .XX ± .015 .XXX ± .005 ANGLES ± 30'
MATERIAL
FINISH
DO NOT SCALE DRAWING

CONTRACT NO.

TEMPTRONIC CORP.

APPROVALS	DATE
DRAWN F.C. Henderson	2-1-84
CHECKED Jim C.	2-22-84
ENG Jim C.	2-22-84

ASSEMBLY PROCEDURE
HEATER HOUSING / SECONDARY HX
(SHT. 2 IS A4107)

UNLESS OTHERWISE SPECIFIED RESISTANCE VALUES ARE IN OHMS ± % WATT
CAPACITANCE VALUES ARE IN ± % VOLTS

SIZE	CODE IDENT NO.	DRAWING NO.	REV
D		4107	B

SCALE NONE SHEET 1 OF 2

ZONE	LTR		DATE	
	A	INITIAL RELEASE PER ECO [illegible]	[illegible]	[illegible]
	B	ECN 3096 2/ST ONLY	6/86	[illegible]
	C	REV PER ECO# 4749C PIL ONLY	9-10-86	[illegible]
	D	REV PER ECO # 4749D	10[illegible]	[illegible]
	E	REV ECO 4749E	7.27.87	[illegible]

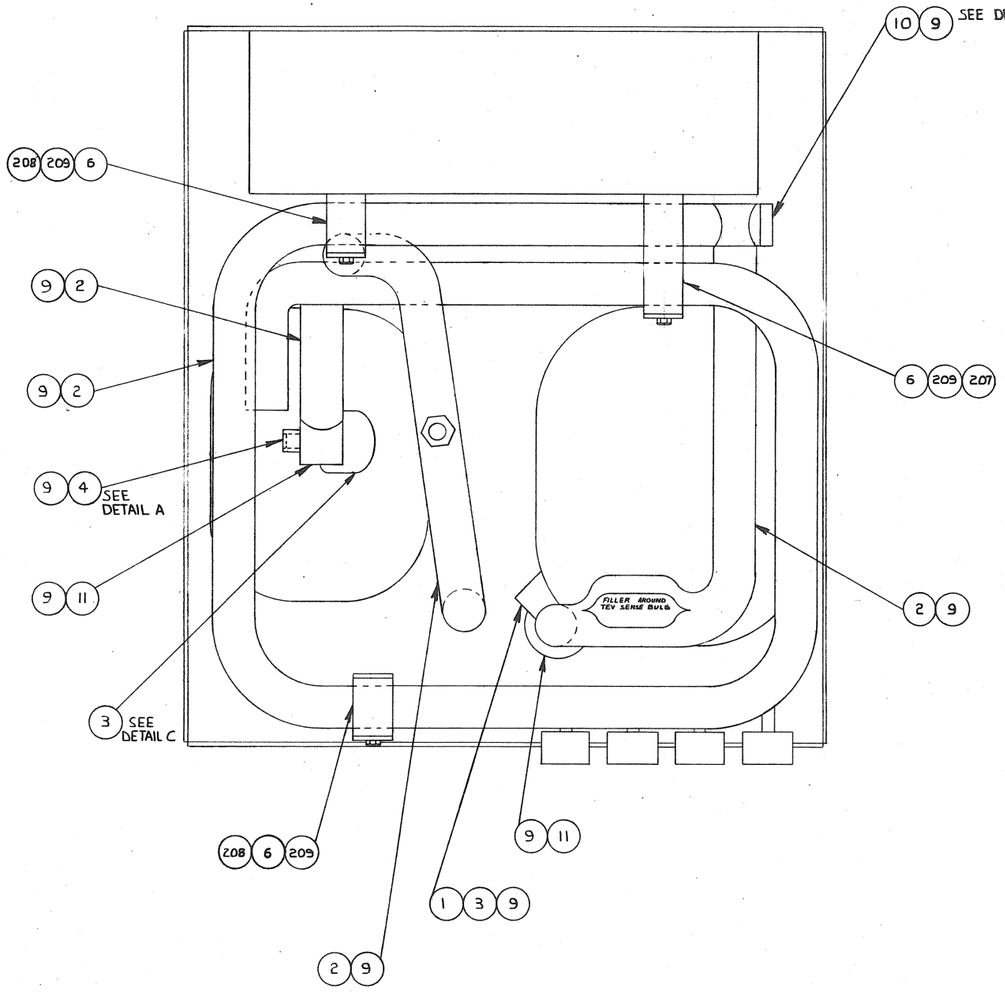

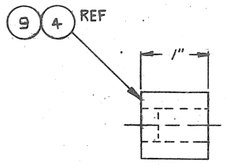

DETAIL A

NOTE : REMOVABLE COVER, CAP END & CEMENT USING (9), DO NOT GLUE TO VALVE

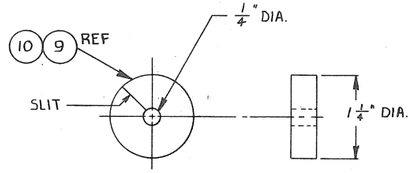

DETAIL B

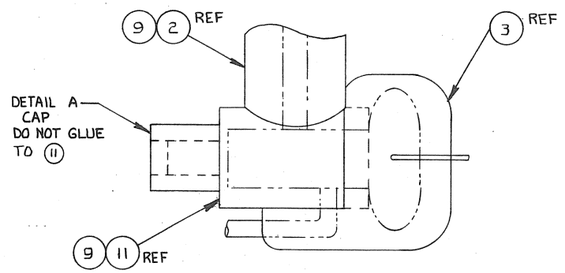

DETAIL C

NOTE : USE ITEM (3) TO COVER END OF VALVE

NOTE :
INSULATION ASS'Y = SHEET 1
ELECTRICAL ASS'Y = SHEET 2

TEMP. STOCK NO.	NOMENCLATURE OR DESCRIPTION	MFG. PART NO.	ITEM
	PARTS LIST		

UNLESS OTHERWISE SPECIFIED DIMENSIONS ARE IN INCHES
TOLERANCES ARE:
FRACTIONS ± 1/64 DECIMALS .XX ± .01 .XXX ± .005 ANGLES ± 30'

MATERIAL: SEE PARTS LIST

FINISH

DO NOT SCALE DRAWING

UNLESS OTHERWISE SPECIFIED RESISTANCE VALUES ARE IN OHMS ± % WATT
CAPACITANCE VALUES ARE IN ± % VOLTS

CONTRACT NO.

TEMPTRONIC CORP.

APPROVALS	DATE
DRAWN [illegible]	4-29-86
CHECKED PEB	6-6-86
RMS	5-6-86
ENG	

INSULATION / ELECTRICAL ASSEMBLY

SIZE D | CODE IDENT NO. | DRAWING NO. 4749 | REV E

SCALE HALF | SHEET 1 OF 2

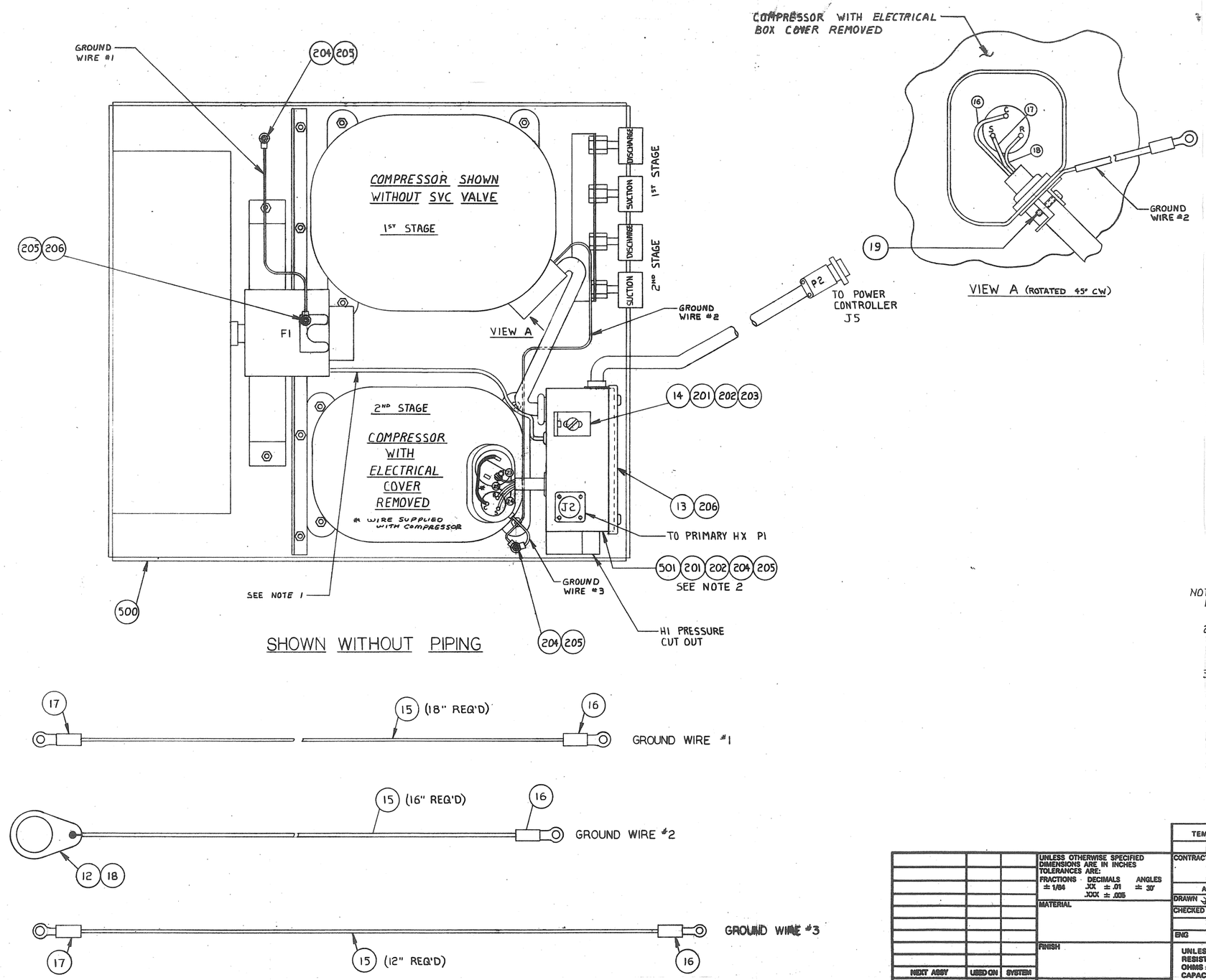

NOTES:
1. WIRE FAN MOTOR THRU CLAMP ON REAR OF ELECTRICAL BOX TO 1 & 2 OF TERMINAL STRIP.
2. CONNECT GROUND WIRE OF ELECTRICAL BOX TO GROUND STUD LOCATED IN BOTTOM OF BOX CUTOUT USING 204 & 205.
3. REFERENCE SCHEMATIC D4754

REVISIONS				
ZONE	LTR	DESCRIPTION	DATE	APPROVED

TEMP. STOCK NO.	NOMENCLATURE OR DESCRIPTION	MFG. PART NO.	ITEM
	PARTS LIST		

UNLESS OTHERWISE SPECIFIED DIMENSIONS ARE IN INCHES TOLERANCES ARE:
FRACTIONS ± 1/64 DECIMALS .XX ± .01 .XXX ± .005 ANGLES ± 30'

MATERIAL

FINISH

DO NOT SCALE DRAWING

NEXT ASSY	USED ON	SYSTEM
APPLICATION		

CONTRACT NO.

APPROVALS		DATE
DRAWN	J.M. Riley	5-1-86
CHECKED	PEB	5-6-86
	RMS	5-6-86
ENG		

UNLESS OTHERWISE SPECIFIED RESISTANCE VALUES ARE IN OHMS ± % WATT CAPACITANCE VALUES ARE IN ± % VOLTS

TEMPTRONIC CORP.

INSULATION / ELECTRICAL ASSEMBLY

SIZE	CODE IDENT NO.	DRAWING NO.	REV
D		4749	E

SCALE HALF SHEET 2 OF 2

REVISIONS				
ZONE	LTR	DESCRIPTION	DATE	APPROVED
	A	INITIAL RELEASE PER ECO 3032	5-15-86	PB

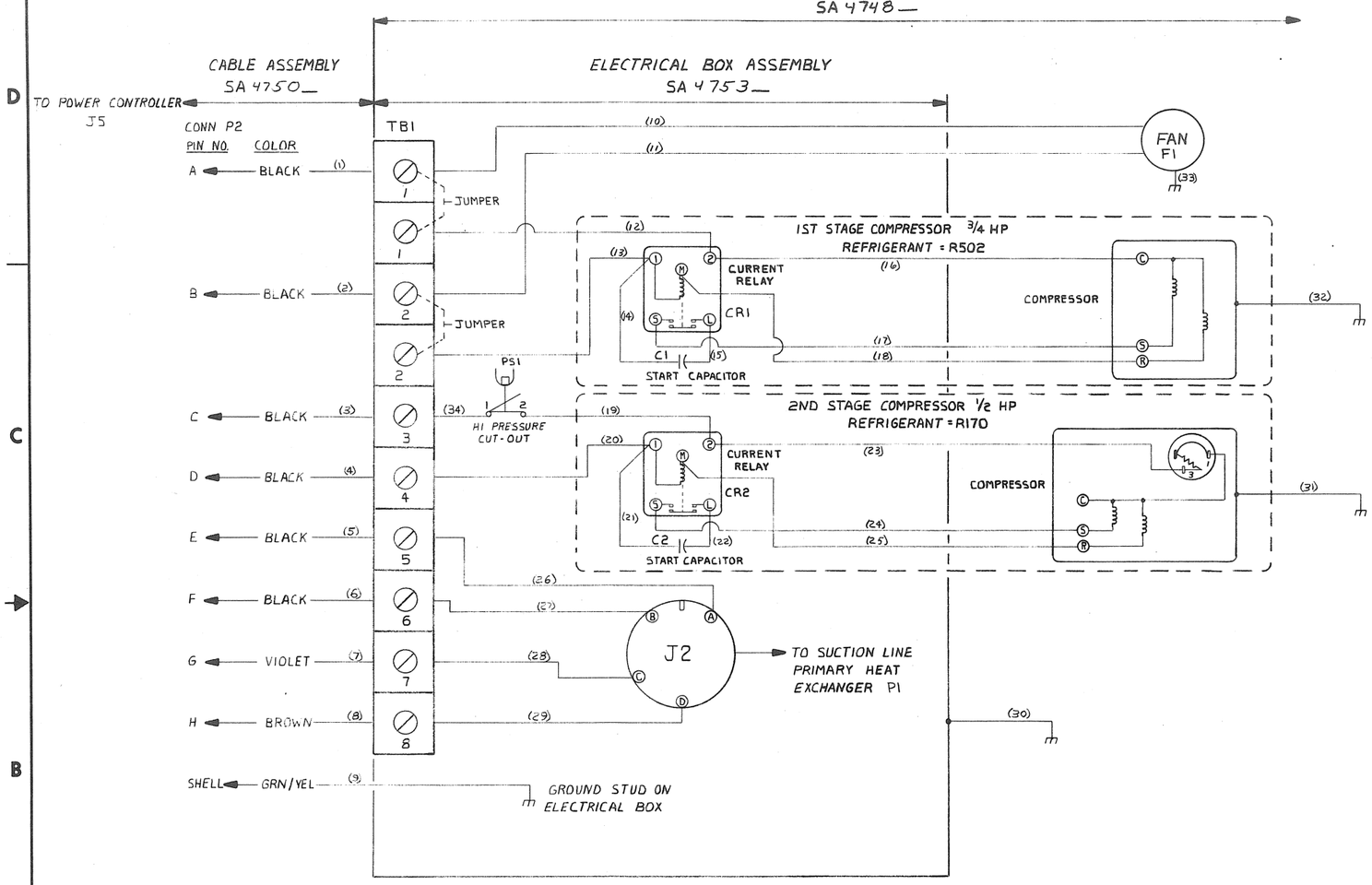

NOTES:
1. (XX) = WIRE NUMBERS
2. WHEN TERMINAL STRIP IS INSTALLED IN ELECTRICAL ENCLOSURE THE TERMINAL SEQUENCE RUNS FROM BOTTOM TO TOP

			UNLESS OTHERWISE SPECIFIED DIMENSIONS ARE IN INCHES TOLERANCES ARE: FRACTIONS ± 1/64 DECIMALS .XX ± .01 .XXX ± .005 ANGLES ± 30'
			MATERIAL —
			FINISH —
SA4753		412	
NEXT ASSY	USED ON	SYSTEM	
APPLICATION			DO NOT SCALE DRAWING

TEMP. STOCK NO.	NOMENCLATURE OR DESCRIPTION	MFG. PART NO.	ITEM
	PARTS LIST		

CONTRACT NO.

TEMPTRONIC CORP.

APPROVALS	DATE
DRAWN [illegible]	4-3-86
CHECKED PEB	5-6-86
RMS	5-6-86
ENG	

SCHEMATIC
SECONDARY HX

UNLESS OTHERWISE SPECIFIED RESISTANCE VALUES ARE IN OHMS ± % WATT
CAPACITANCE VALUES ARE IN ± % VOLTS

SIZE	CODE IDENT NO.	DRAWING NO.	REV
D		4754	A

SCALE — SHEET 1 OF 1

FOTOSEAM/BROOKSIDE 0225-D

SECTION 8
APPENDICES

8-1 APPENDIX INTRODUCTION

This section of the manual contains such additional information as warranty, available options/accessories, and application notes for the Model TP0412A ThermoStream System.

Appendix A — Provides a copy of Temptronic Corporation's standard Warranty. This is the only warranty recognized by Temptronic.

Appendix B — Has been reserved for all the options/accessories. The user must identify which if any apply to any given system. Illustrations are provided for assistance.

Appendix C — Has been reserved for application notes and user hints to optimize the system operation.

Appendix D — Contains user registration cards and system operation procedure hang tags.

Appendix E — Provides a listing of Service and Sales Representatives.

Warranty

Temptronic Corporation warrants all equipment of its manufacture to be free from defects in materials and workmanship for a period of one year from date of shipment to the original buyer. The liability under this warranty is limited to replacement parts and labor on equipment when, with prior authorization from Temptronic, it is returned prepaid to the factory and when, upon examination by Temptronic, it is determined to be defective. All costs incurred in shipping the equipment or parts thereof are the responsibility of the buyer. Our warranty for this instrument is *rendered void* if the unit has been repaired, taken apart or modified, or attempted to be, unless such actions have been taken in accordance with written instructions received from Temptronic. The warranty is also void if the equipment has been subjected to abuse, accident, or other abnormal conditions.

IF ANY FAULT DEVELOPS
THE FOLLOWING STEPS SHOULD BE TAKEN:

A. Notify Temptronic, giving full details of the difficulty, and include the model number and serial number of the equipment. On receipt of this information, service data or shipping instructions will be given. Do not return unit for repair without first contacting factory or sales representative for instructions.

B. On receipt of shipping instructions, forward the instrument prepaid to the factory. If requested, an estimate of the charges will be made before the work begins, in cases where the instrument is not covered by the warranty.

C. If the original carton and packing are not available, the instrument should be packed in a strong exterior container and surrounded by two or three inches of excelsior or similar shock-absorbing material. We advise that returned equipment should be declared at full value to the carrier.

Temptronic Corporation reserves the right to make changes in design at any time without incurring any obligation to install same on units previously purchased.

This warranty states the essence of the obligations or liabilities on the part of Temptronic Corporation. THE FORMAL, COMPLETE, AND EXCLUSIVE STATEMENT OF TEMPTRONIC CORPORATION'S WARRANTY IS CONTAINED IN ITS QUOTATIONS, ACKNOWLEDGMENTS, AND INVOICES. Temptronic Corporation neither assumes, nor authorizes any person to assume for it any liability in connection with the sale of its equipment other than those set forth therein.

APPENDIX B
Options/Accessories

Though the basic Model TP0412A ThermoStream System as supplied is complete, and realizing that each user's application of the system may vary, several options and accessories are available to configure the standard system to meet those requirements.

A separate section is devoted here to those enhancements, see list below, which are considered either complex or stand alone assemblies.

Appendix	Options/Accessories	Part Number
B-1	Floor Stand	ZHS 42750
B-1	Floor Stand Remote Foot Switch	ZAK 39780
B-2	Air Dryer	ZAD 40520
B-2	Air Filter Assembly	ZAD 40510
B-3	Single Wall ThermoCap Kit	ZAK 42550
B-3	Small Double Wall Kit	ZAK 42540
B-3	Large Double Wall	ZAK 42480
B-3	PCB Enclosure	ZSA 42890
B-3	MiniHandler	Not Assigned
B-4	Shroud Enclosures	See Appendix
B-4	Insulation Kits	See Appendix
B-5	Remote Control Assembly	SA 36100
B-6	Buck Boost Transformer	See Appendix
B-7	Single Select Module	SA 35900
B-7	Five Select Module	SA 32160
B-8	IEEE Interface	ZMK 43790
B-9	BCD Interface	ZMK 43800
B-10	DUT Control Option	ZRM 42180

These features maybe added at any time to the system after manufacture. Some may require returning the system to the factory for modification.

APPENDIX B-1
TP0412A THERMOSTREAM STAND

B-1.1 INTRODUCTION

A floor stand consisting of; a castered base plate, flanged VERTICAL POST and HORIZONTAL ARM is offered as an option/accessory to the ThermoStream TP0412A Thermal Inducing System.

The stand supports the WAND (Primary Heat Exchanger) and facilitates positioning/interfacing to the tester. In addition, it accommodates the entire system and options creating a self contained easily moved unit.

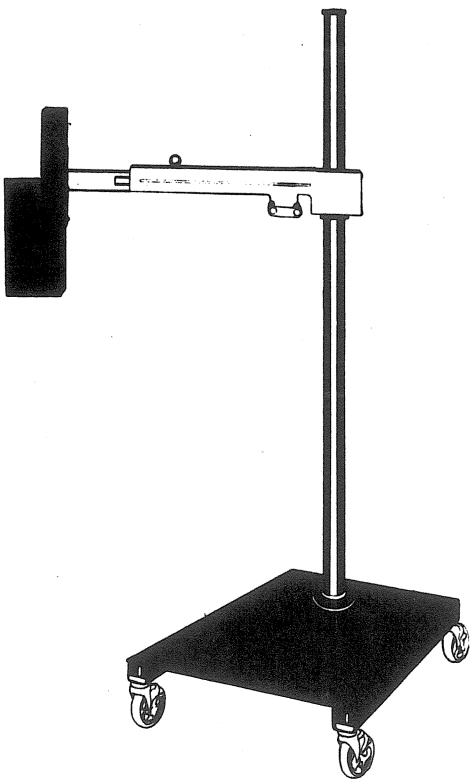

Figure B-1.1. Floor Stand

B-1.2 STAND ASSEMBLY

For assembly instructions, refer to drawing D4177 (P/N LMS1110). The base plate and HORIZONTAL ARM are shipped in the same container as the system with the VERTICAL POST shipped separately.

Care should be taken not to stress the SUCTION LINE assembly during this operation. The WAND LOCKS should be released during this operation. There should not be any sharp bends, kinks or twist in the SUCTION LINE assembly.

The stand requires both gas and electrical sources which are available from the power controller. Make these two (2) connections to the appropriate Power Controller back panel receptacles using the hose and cable supplied.

If the optional REMOTE FOOT switch was purchased, the mating connector is located underneath the HORIZONTAL ARM directly opposite the HORIZONTAL ARM SLIDE-LOCK (red ball knob). When the REMOTE FOOT switch is plugged into the stand, the LIFT/LOWER switches on the pneumatic piston housing remain operational.

An ENCLOSURE AIR SUPPLY PORT is provided on the stand to accept the small barbed fitting and hose included with the double walled ThermoCaps. Originally, it was located in the vicinity of the REMOTE FOOT switch connector. In later designs, it was moved to the rear of the pneumatic piston housing. This port is generally capped for shipment.

NOTE

DISCONNECT AIR SUPPLY BEFORE REMOVING CAP.

REVISIONS				
ZONE	LTR	DESCRIPTION	DATE	APPROVED
	D	ECN NO 4177D	3-1-86	

REV.	ECN.NO	DATE
A	REL.	7-24-84
B		
C	2607	1-10-85
D	4177D	9-11-86

NOTES

1. ATTACH POST FLANGE ASSY.TO STAND BASE ASSY.AS SHOWN WITH 4 BOLTS, NUTS AND WASHERS SUPPLIED.
2. (OPTIONAL) MOUNT AIR DRYER TO POST AS SHOWN WITH CLAMPS AND HARDWARE SUPPLIED WITH AIR DRYER, TOP OF DRYER EVEN WITH TOP OF CONTROLLER CABINET.
3. MOUNT TOP ARM ASSEMBLY ON POST AS SHOWN.
4. INSTALL PLASTIC CAP ON TOP OF POST AS SHOWN.
5. SLIDE HEATER ASSY.INTO TOP ARM AS SHOWN AND TIGHTEN NYLON SCREWS.
6. REMOVE ONE HALF OF SUCTION LINE SUPPORT CLAMP (BLUE CLAMP ON SIDE OF TOP ARM) POSITION SUCTION LINE IN CLAMP APPROXIMATLY 14"TO 16"ABOVE TOP ARM ASSY. (GRADUAL BEND) RE-ATTACH CLAMP HALF AND TIGHTEN.
7. ATTACH ENCLOSURE TO HEATER ASSEMBLY WITH 2-SCREWS AND WASHERS SUPPLIED, RECOMMEND VENT HOLE BE POSITIONED TOWARD REAR OF UNIT AWAY FROM OPERATOR (6-POSITIONS AVAILABLE)
8. PUSH DESIRED RUBBER SHROUD OVER NOZZLE IN ENCLOSURE
9. REFER TO MANNUAL FOR AIR AND ELECTRICAL CONNECTIONS AND SYSTEM/STAND OPERATION.

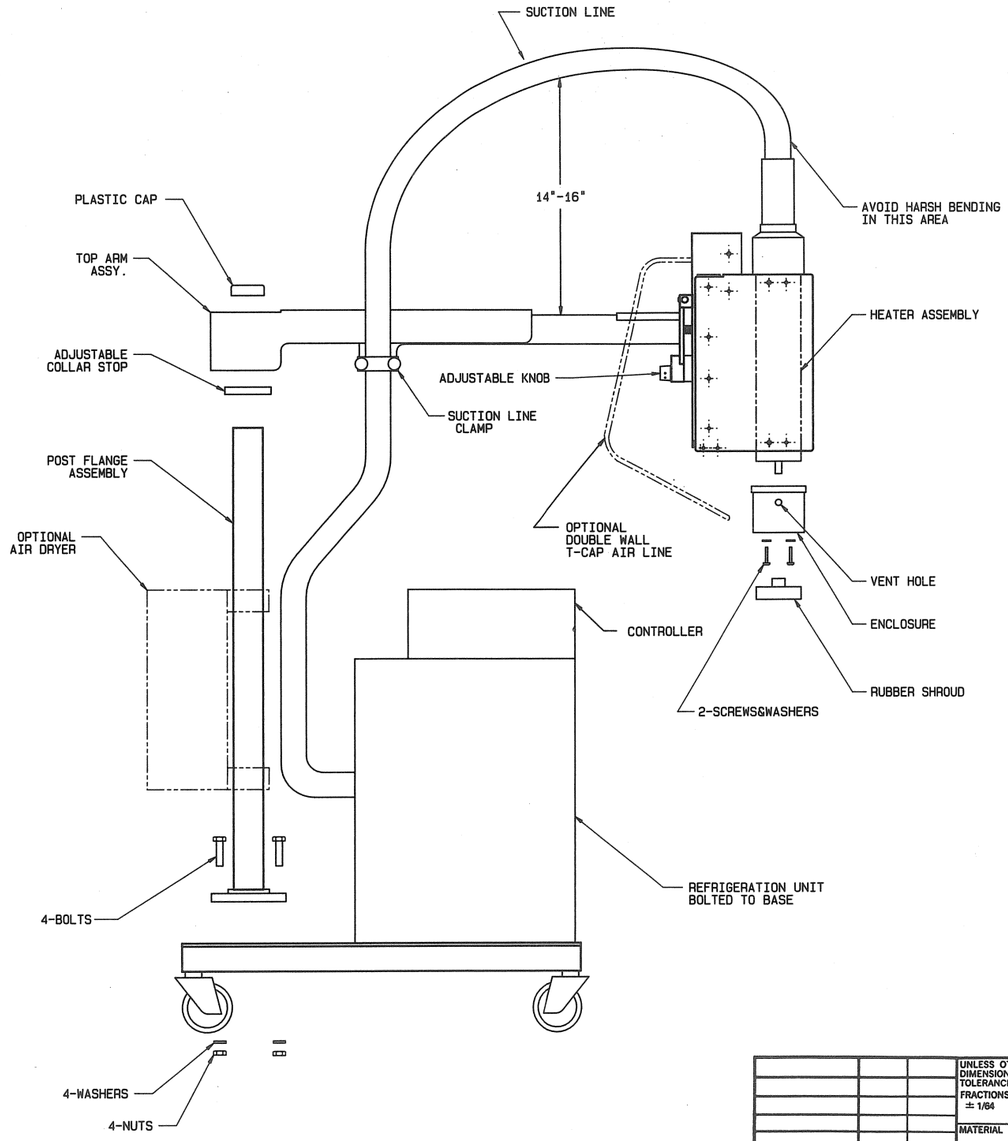

TEMP. STOCK NO.	NOMENCLATURE OR DESCRIPTION	MFG. PART NO.	ITEM
	PARTS LIST		

APPENDIX B-1	LMS1HEC	TPA12A
D 3866	ZHS3866	TPA12A
NEXT ASSY	USED ON	SYSTEM

APPLICATION

UNLESS OTHERWISE SPECIFIED DIMENSIONS ARE IN INCHES
TOLERANCES ARE:
FRACTIONS ± 1/64 DECIMALS .XX ± .01 .XXX ± .005 ANGLES ± 30'

MATERIAL: N/A

FINISH: N/A

DO NOT SCALE DRAWING

CONTRACT NO.

TEMPTRONIC CORP.

APPROVALS	DATE
DRAWN J WOODMAN	7-24-84
CHECKED	
ENG	

STAND INTEGRATION PROCEDURE (LMS1HEC)

UNLESS OTHERWISE SPECIFIED RESISTANCE VALUES ARE IN OHMS ± % WATT
CAPACITANCE VALUES ARE IN ± % VOLTS

SIZE	CODE IDENT NO.	DRAWING NO.	REV
D		4177	D

SCALE 3/8 SHEET 1 OF 1

FOTOBEAM/BROOKSIDE 0228-D

B-1.3 STAND FEATURES

Refer to Figure B-1.2 and the following table to become familiar with the stand's features and controls.

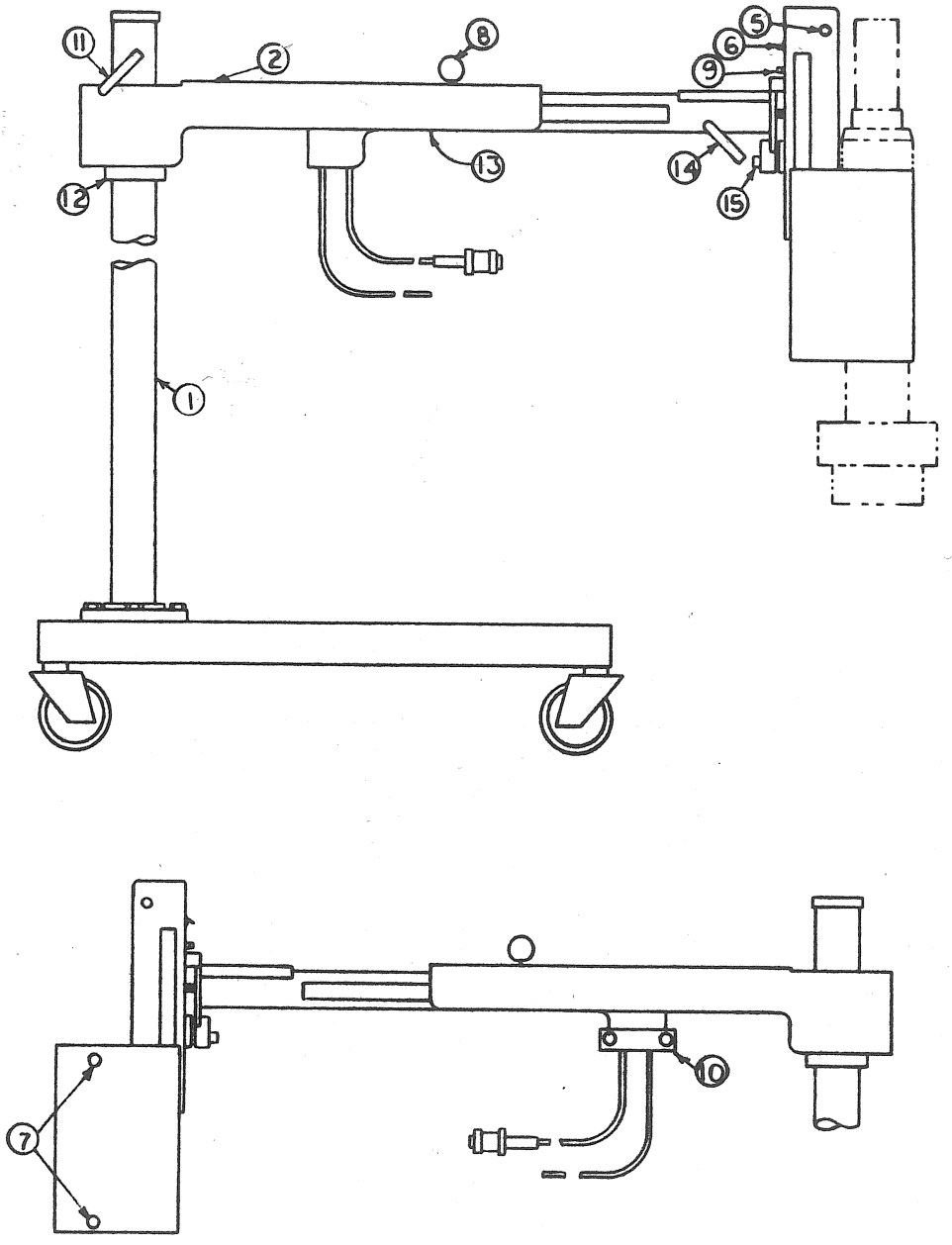

Figure B-1.2. Stand Features and Controls.

B-1.3 STAND FEATURES (cont.)

Item	Designation	Function	Explanation
1	VERTICAL POST	Supports the HORIZONTAL ARM and optional gas dryer.	This is a fixed support which allows the HORIZONTAL ARM to pivot and be adjusted to different tester heights.
2	HORIZONTAL ARM	Supports the primary heat exchanger and pneumatic piston assembly.	Allows the primary to be rotated 180° from a vertical position and an in/out travel of about 15 inches with a 6 inch up/down stroke.
* 3	DOWN PRESSURE regulator (see fig. B-1.3 & B-1.4)	Allows adjustment of the gas piston pressure against the tester surface.	Offers manual control of the gas piston supply pressure which enables the user to seal the ThermoCap against the insulated tester surface and prevent cold gas leakage and resultant condensation.
** 4	DOWN SPEED control (see fig. B-1.3 & B-1.4)	Allows adjustment of the piston down speed.	Offers manual setting of the gas valve which controls the down-speed of the gas piston. This allows the user to align the ThermoCap and component enclosure by slowing the descent and making the necessary adjustments.

* This control has been replaced by a pressure regulator (R1), factory preset to 30psig., located in the Power Controller.

** This control has been replaced by a fixed orifice and a JOG switch (see Item 6) has been provided.

Item	Designation	Function	Explanation
5	LIFT/LOWER switch (2 places)	Provides means to select either the raised or lowered position of the primary.	Momentary push button switches (one on either side of the pneumatic piston housing) which can be manually switched to either "lift" or "lower" the primary and ThermoCap.
6	JOG switch (only on '85 stand)	Provides means to stop descent of the WAND.	Toggle switch which allows the downward motion of the WAND to be interrupted for aligment of the shrouds and WAND over the test site.
7	WAND LOCKS (2 places)	Prevent the primary from rotating.	When turned clockwise, the friction on the primary pivot bar increases. These locks should be released when the horizontal arm is being positioned in order to prevent stress in the primary SUCTION LINE, and they should be locked when the horizontal arm is in position for testing so that the ThermoCap alignment remains fixed.
8	HORIZONTAL ARM SLIDE LOCK	Secures the HORIZONTAL ARM in/out position.	When turned clockwise it tightens against the HORIZONTAL SLIDING ARM wear bar.
9	ENCLOSURE AIR SUPPLY PORT	Supply air for double wall ThermoCap walls or windows in the optional MINIZONE or MINIDOME.	Barbed hose fitting to accept ThermoCap or window air supply hose. This air prevents or minimizes condensation in most cases on the surfaces during low temperature operation.

Item	Designation	Function	Explanation
10	SUCTION LINE SUPPORT BRACKET	Relieve undesired stresses on the SUCTION LINE assembly.	This bracket clamps the SUCTION LINE assembly to either side of the stationary part of the HORIZONTAL ARM to support the weight of the line. It also pivots allowing the line to follow the primary.
11	HORIZONTAL ARM ROTATION LOCK	Prevents HORIZONTAL ARM from rotating on VERTICAL POST after positioning.	When turned clockwise increases friction on VERTICAL POST securing HORIZONTAL ARM position.
12	RETAINING COLLAR	Used as a stop to set the height and support the weight of the HORIZONTAL ARM on the VERTICAL POST.	Split ring-type clamp which can be securely tightened against the VERTICAL POST to support the end of the HORIZONTAL ARM. This prevents any accidental slippage of the HORIZONTAL ARM.
13	REMOTE switch receptacle	Accepts optional foot switch.	This connector parallels the Lift/ Lower switch allowing a REMOTE switch to be used to lift/lower the primary.
14	HEAD ROTATION LOCK	Maintain HEAD/WAND position.	When turned clockwise increases friction on pivot shaft.
***15	WAND ALIGNMENT adjustment	Allows for perpendicular alignment of the WAND to the test fixture.	Turning the knob counter clockwise tilts the pneumatic piston housing away from the HORIZONTAL ARM (max. deflection is approx. 10°).

*** This adjustment was supplied on the stand shipped with system serial number 8607391 and all subsequent stands. An upgrade/modification kit (P/N CS4895) is available from the Service Department to retrofit previously shipped stands.

B-1.3.1 STAND OPTIONS

Item	Designation	Function	Explanation
1	IEEE-488	Allows automatic (computer) up/down control of the primary.	If this option has been added to the system, the up/down action of the primary can be controlled by software.
2	REMOTE FOOT switch	Allows remote up/down manual control of the primary.	If this option has been added to the stand, the up/down action of the primary can be controlled by an electrical REMOTE FOOT switch. The switch may be either foot or hand operated. When connected, this switch compliments the LIFT/LOWER switches (see item 5).

B-1.4 STAND INSTALLATION

Ideally, the VERTICAL POST should be as close as possible to the test site to minimize extending the HORIZONTAL ARM thus reducing the moment on the arm. However, the stand has been made to operate at its full extension without difficulty. Refer to drawing D4275 for illustration of the stand's flexibility.

The HORIZONTAL ARM height should be adjusted so the piston has approximately one (1) inch of travel left when the ThermoCap is in the down-position making contact with the tester interface. The RETAINING COLLAR and HORIZONTAL ARM ROTATION LOCK, should both be used to maintain the desired position.

NOTE: The WAND LOCKS should be released before extending the HORIZONTAL ARM or adjusting its height. The LOCKS should be tightened when re-positioning is complete.

When positioning the HORIZONTAL ARM;

a) retract and secure the HORIZONTAL ARM using the SLIDE LOCK
b) support the arm assembly in the area of the SUCTION LINE SUPPORT BRACKET with one hand
c) loosen the HORIZONTAL ARM ROTATION LOCK and RETAINING COLLAR
d) with both hands move the entire assembly to the desired height
e) secure in place using both locking mechanisms, as previously mentioned
f) loosen the HORIZONTAL ARM SLIDE LOCK
g) adjust and secure arm length so the ThermoCap is properly positioned over the test site
h) use the WAND LOCKS to secure the primary and ThermoCap into position

This should complete the positioning of the stand/primary to the tester.

REVISIONS				
ZONE	LTR	DESCRIPTION	DATE	APPROVED
	E	PER ECN 4275E	9-11-86	

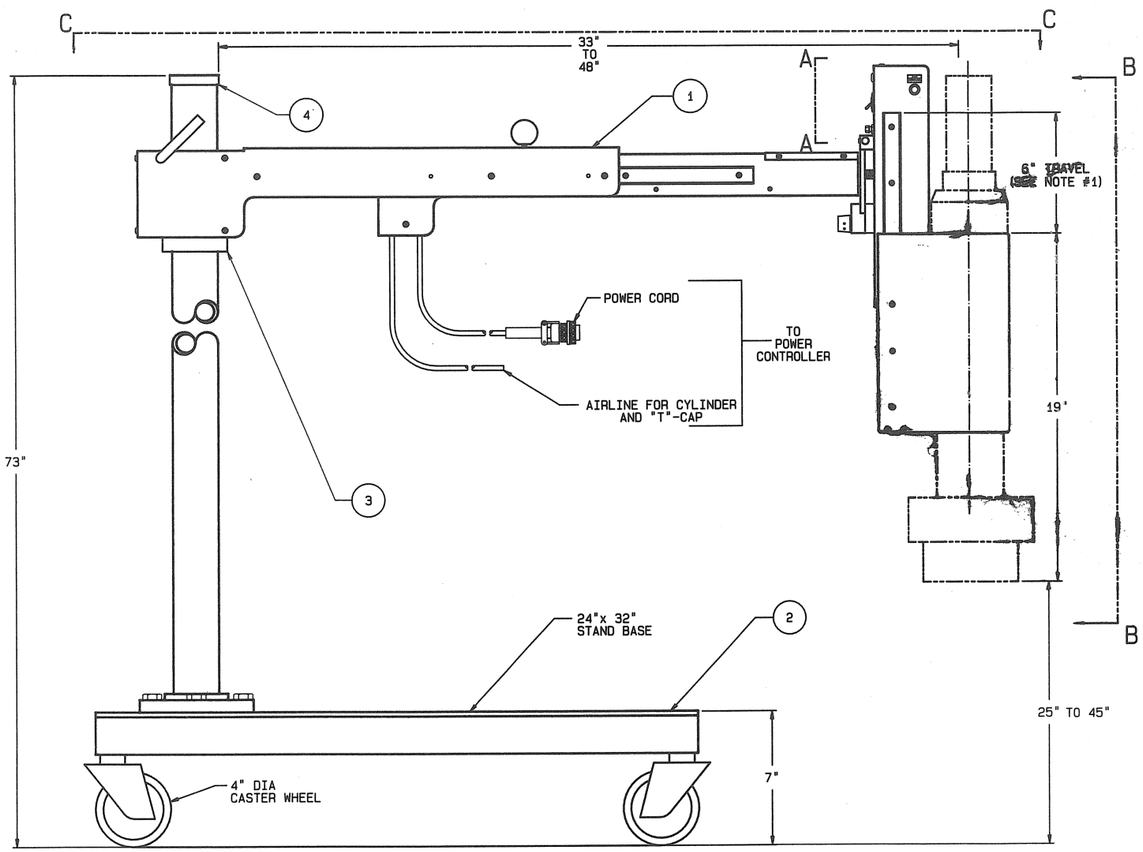

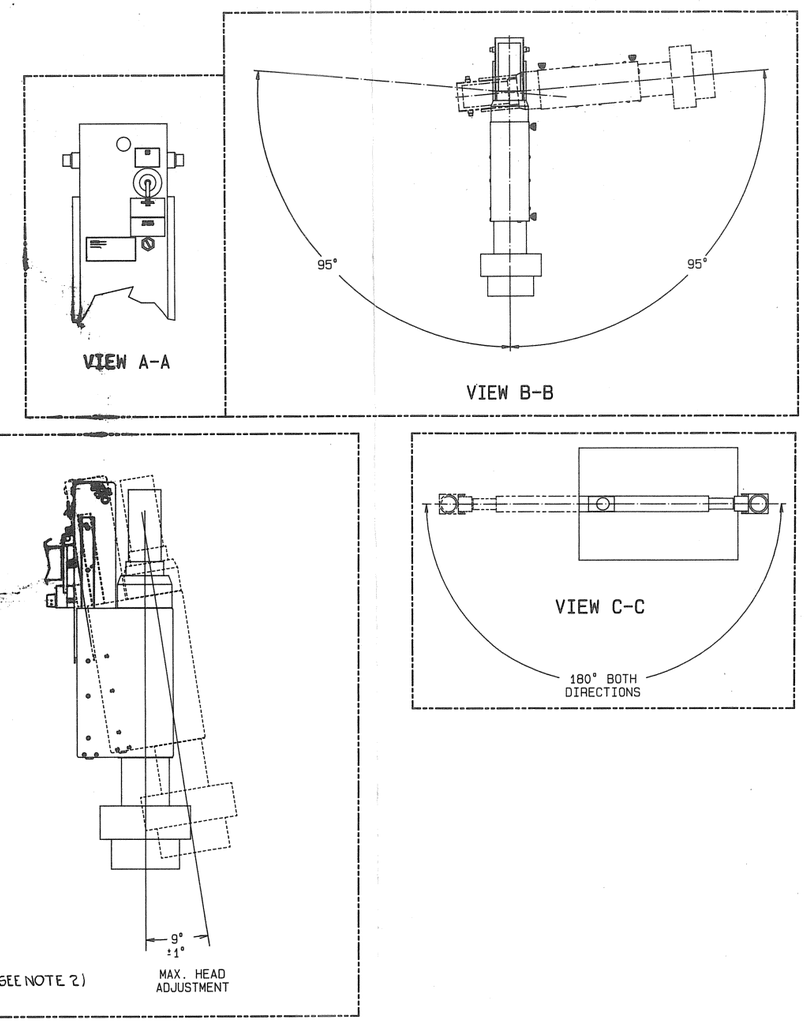

1- HEAD ASSY. IS SHOWN IN THE DOWN POSITION.

2- MODIFICATION KIT (CS4895) AVAILABLE TO UPGRADE OLDER EQUIPMENT.

REV.	ECN.NO	DATE
A	REL	1-10-85
B	2607	1-10-85
C	2636	3-7-85
D	2897	12-85
E	4275E	9-11-86

TEMP. STOCK NO.	NOMENCLATURE OR DESCRIPTION	MFG. PART NO.	ITEM
	PARTS LIST		

APPENDIX B-1	LMS1180	TP04-12A
		TP04-12A
NEXT ASSY	USED ON	SYSTEM
APPLICATION		

UNLESS OTHERWISE SPECIFIED DIMENSIONS ARE IN INCHES TOLERANCES ARE:
FRACTIONS ± 1/64 DECIMALS .XX ± .01 .XXX ± .005 ANGLES ± 30'

MATERIAL N/A

FINISH N/A

DO NOT SCALE DRAWING

CONTRACT NO.

APPROVALS		DATE
DRAWN	L. REYNOLDS	1-10-85
CHECKED	[illegible]	9-16-86
ENG		

UNLESS OTHERWISE SPECIFIED RESISTANCE VALUES ARE IN OHMS ± % WATT CAPACITANCE VALUES ARE IN ± % VOLTS

TEMPTRONIC CORP.

STAND TOP ASSEMBLY

SIZE	CODE IDENT NO.	DRAWING NO.	REV
D		4275	E

SCALE NONE SHEET 1 OF 1

FOTOBEAM/BROOKSIDE 0228-D

B-1.5 STAND OPERATION

A functional checkout of the stand should be performed after it has been assembled and connected as outlined in Section B-1.2. Refer to Section B-1.3, to become familiar with the stand features and controls. It is suggested that a piece of the silicone foam insulating material be placed on the bench or table surface for the ThermoCap to be lowered onto.

The stand's electrical and air requirements are supplied by the Power Controller, requiring the system to be powered. The system's input gas supply should be regulated as specified.

The HORIZONTAL ARM assembly contains the principal controls. Since the introduction of the stand, several design changes have been made improving performance and simplifing operation. Three of the changes concern the location and function of the pneumatic piston housing controls, see Figures B-1.3, B-1.4 and B-1.5 (current configuration). The most recent (7/86) revision was the addition of the WAND ALIGNMENT adjustment (Item 15 of Figure B-1.2) to ensure proper sealing at the test site. It is possible to add the WAND ALIGNMENT feature to an existing stand, see drawing D4895 at the end of this section.

When all requirements such as insulating the test site (see Appendix C-2) and functional checkouts are satisfied, the stand/system should be interfaced to the test site.

B-1.5.1 Original Stand Controls

The stand controls are mounted on the top of the sliding horizontal arm, see Figure B-1.3, just behind the primary (WAND) and pneumatic piston assembly. The LIFT/LOWER switch activates a valve to lift or lower the heater housing and ThermoCap assemblies. The first knurled knob behind the switch is used to control the down speed of the primary. The second knurled knob is used to adjust the down pressure exerted by the ThermoCap on the tester. In both cases, turning the knurled knob clockwise, will decrease or restrict the action of the pneumatic piston.

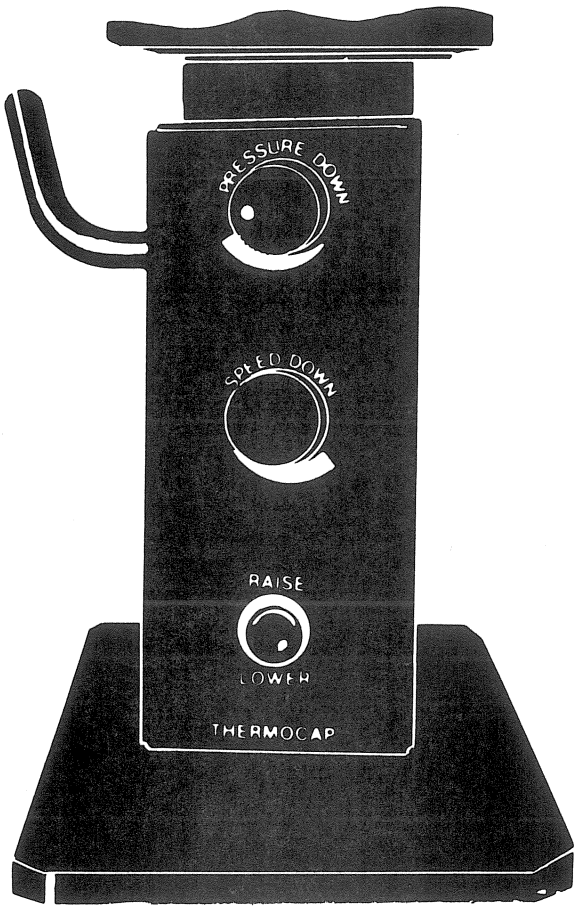

Figure B-1.3. Original Stand Controls.

Once the speed and pressure controls have been adjusted and the up/down action is acceptable, the thermal interfacing to the tester is complete and the system is now ready for temperature testing.

B-1.5.2 Interim Stand Controls

In this version, the controls were mounted on the piston housing, see Figure B-1.4. The function of each control remained the same, as previously stated in Section B-1.5.1. The purpose of this change was to allow convenient location of the LIFT/LOWER switch (one on either side of the pneumatic piston housing) and ENCLOSURE AIR SUPPLY PORT as well as enclose the gas piston.

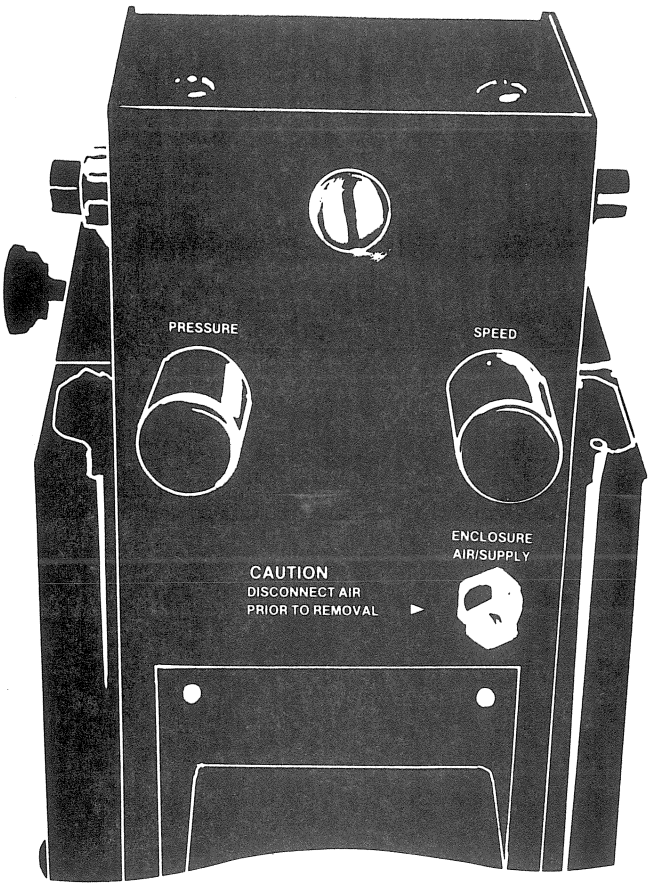

Figure B-1.4. Interim Stand Controls.

B-1.5.3 '85 Stand Controls

This version, see Figure B-1.5, removed the DOWN PRESSURE regulator and DOWN SPEED control, see footnotes on page B-1.5. A JOG switch was provided to interrupt the downward movement of the WAND to facilitate aligning the shroud.

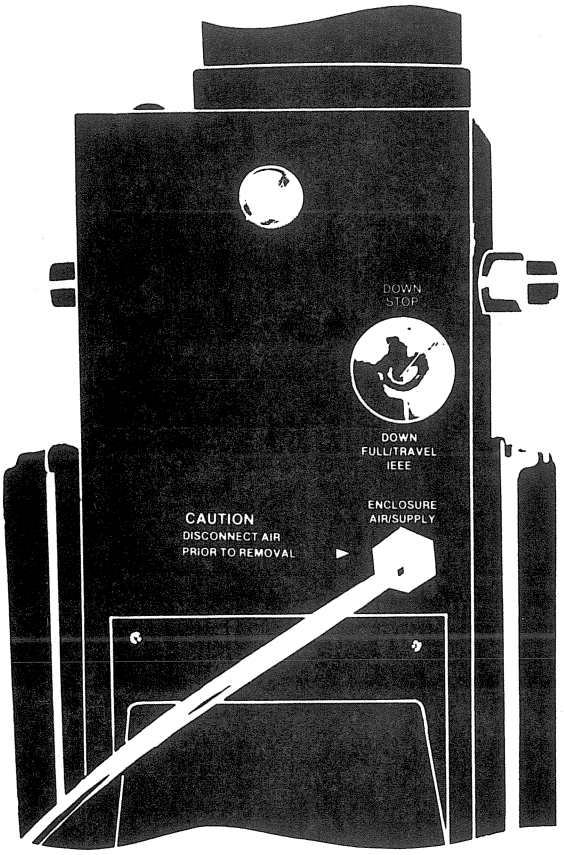

Figure B-1.5. '85 Stand Controls.

B-1.6 OPTIONS

An optional foot switch (P/N ZAK39780) is available to initiate the lifting or lowering of the WAND. The LIFT/LOWER switch(s) has been paralleled to a connector located underneath the HORIZONTAL ARM.

The up/down action of the pneumatic piston (WAND) may also be IEEE-488 controlled providing the microprocessor controller is equipped with that option and properly interfaced.

B-1.7 TROUBLSHOOTING

Drawing D4269 (sheet 3 of 3) is provided here to assist with troubleshooting this assembly.

REVISIONS				
ZONE	LTR	DESCRIPTION	DATE	APPROVED
	A	ECN 3058 RELEASED.	5/86	PB
	B	ECN 4797 B	8/86	

FIGURE 1

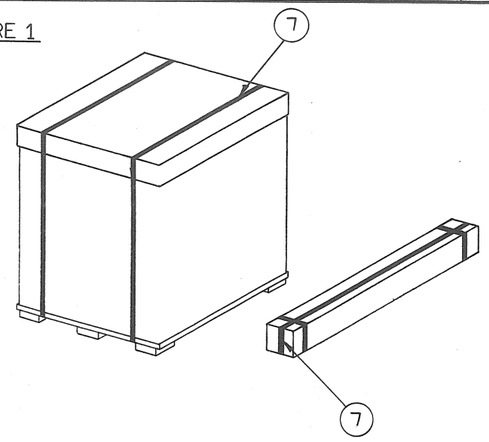

FIGURE 2

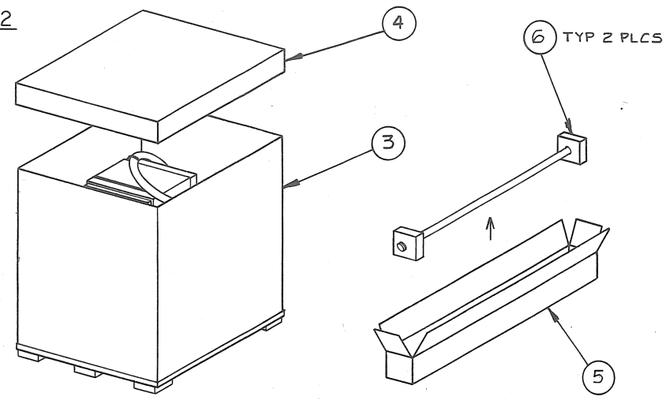

FIGURE 3

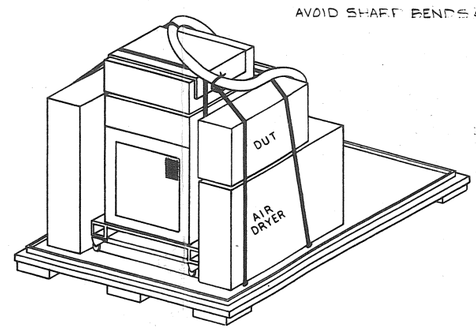

FIGURE 4

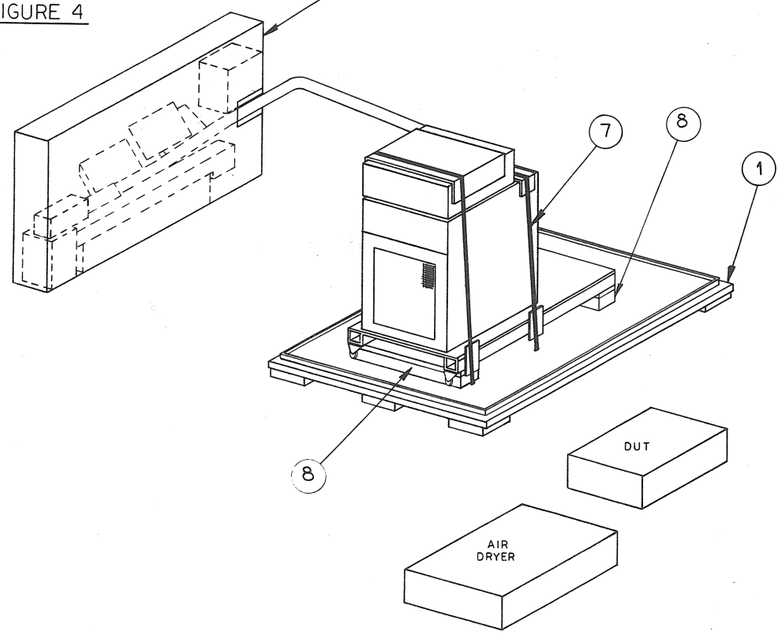

FIGURE 5

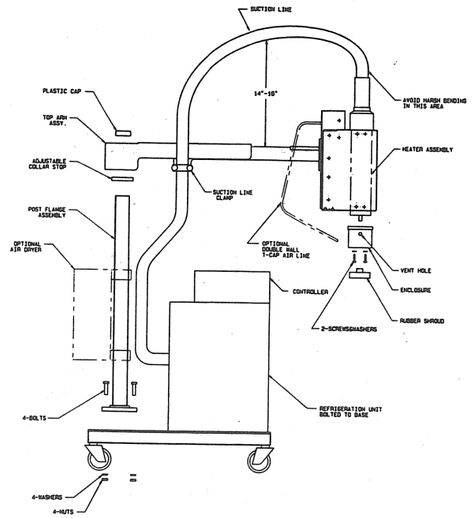

			UNLESS OTHERWISE SPECIFIED DIMENSIONS ARE IN INCHES TOLERANCES ARE: FRACTIONS ± 1/64 DECIMALS .XX ± .01 .XXX ± .005 ANGLES ± 30'
			MATERIAL
			FINISH
NEXT ASSY	USED ON	SYSTEM	
APPLICATION			DO NOT SCALE DRAWING

TEMP. STOCK NO.	NOMENCLATURE OR DESCRIPTION	MFG. PART NO.	ITEM
	PARTS LIST		

CONTRACT NO.

TEMPTRONIC CORP.

APPROVALS	DATE
DRAWN EDPINOLA	5-8-86
CHECKED PB	5-8-86
ENG	

412 SHIPPING CONTAINER ASSY

UNLESS OTHERWISE SPECIFIED RESISTANCE VALUES ARE IN OHMS ± % WATT
CAPACITANCE VALUES ARE IN ± % VOLTS

SIZE	CODE IDENT NO.	DRAWING NO.	REV
D		4797	B

SCALE | SHEET 1 OF 1

FOTOBEAM/BROOKSIDE 0228-D

REVISIONS				
ZONE	LTR	DESCRIPTION	DATE	APPROVED

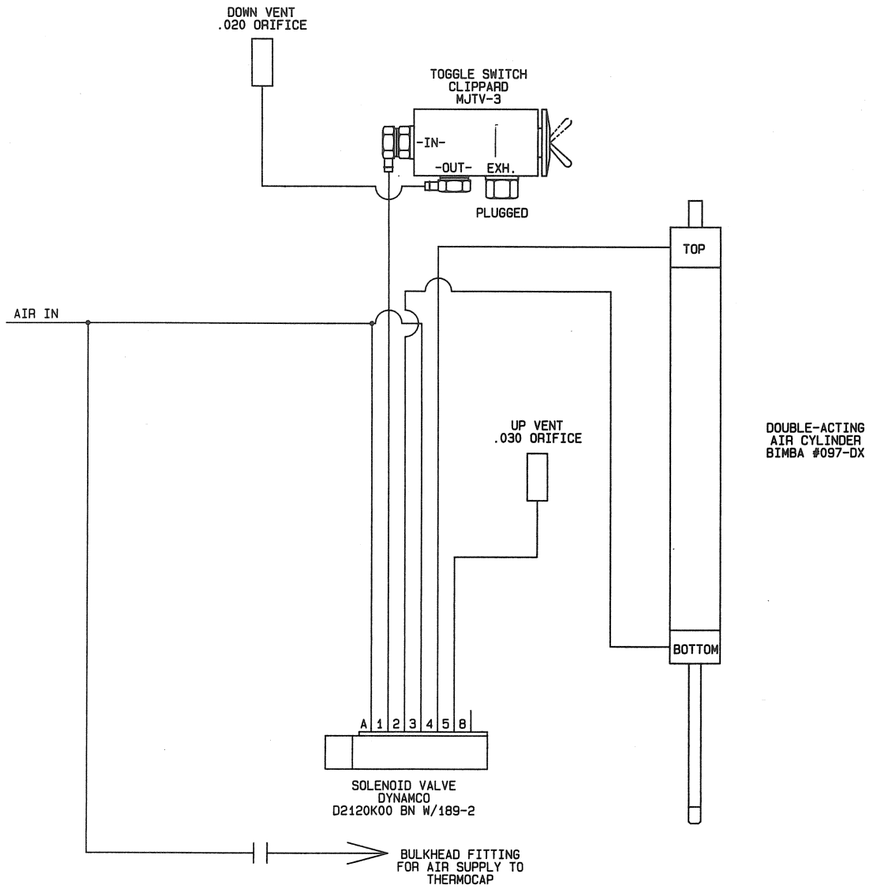

PNEUMATIC BLOCK
DIAGRAM

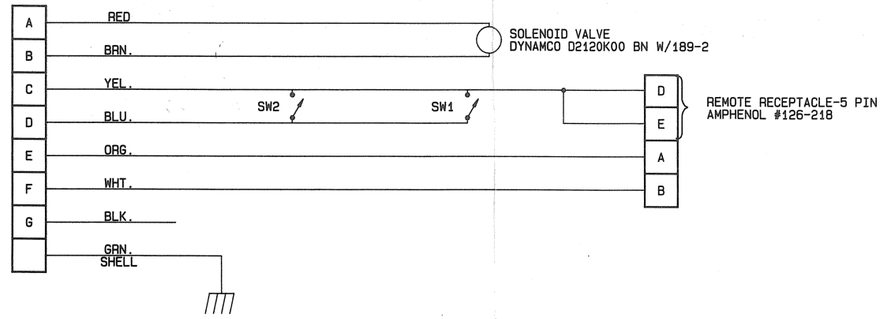

TEMP. STOCK NO.	NOMENCLATURE OR DESCRIPTION	MFG. PART NO.	ITEM
	PARTS LIST		

ZH54275		TP412A	
NEXT ASSY	USED ON	SYSTEM	
APPLICATION			

UNLESS OTHERWISE SPECIFIED DIMENSIONS ARE IN INCHES
TOLERANCES ARE:
FRACTIONS ± 1/64 DECIMALS .XX ± .01 .XXX ± .005 ANGLES ± 30'

MATERIAL: SEE P/L

FINISH: NONE

DO NOT SCALE DRAWING

CONTRACT NO.

TEMPTRONIC CORPORATION

APPROVALS	DATE
DRAWN J. STARK	5-20-86
CHECKED	
ENG	

HEAD SUB-ASSEMBLY

UNLESS OTHERWISE SPECIFIED
RESISTANCE VALUES ARE IN OHMS ± % WATT
CAPACITANCE VALUES ARE IN ± % VOLTS

SIZE	CODE IDENT NO.	DRAWING NO.	REV
D		4269	J

SCALE 1/2 SHEET 3 OF 3

FOTOBEAM/BROOKSIDE

APPENDIX B-2
AIR/GAS DRYER ASSEMBLY

B-2.1 DRYER ASSEMBLY

The optional air/gas dryer, shown in Figure B-2.1, as supplied, is a complete assembly requiring only gas and power connections. The gas source input pressure should be within the allowed limits of 80 to 120 psig (5.6 to 8.4 kg/cm^2) when the system is operating. The power cord is designed to be connected to the power controller, eliminating the need for a separate power outlet. Provision has been made for mounting the dryer to the floor stand-column using the 2 (blue) clamps and hardware provided or any vertical surface. A 10-foot hose is supplied, but a longer connection may be used if necessary, to connect the dryer to the gas/air source.

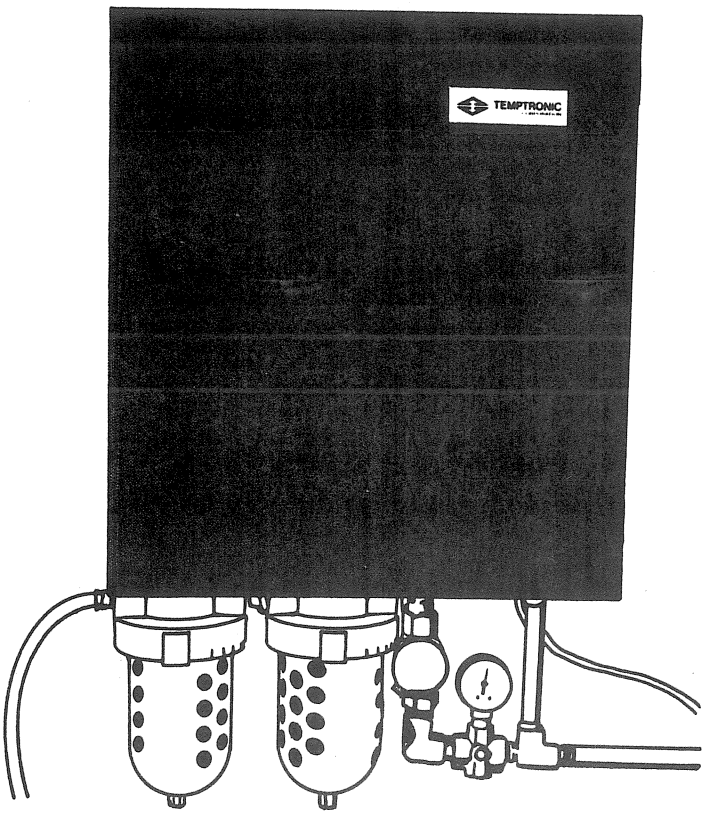

Figure B-2.1. Air/Gas Dryer Assembly.

B-2.2 DRYER FEATURES

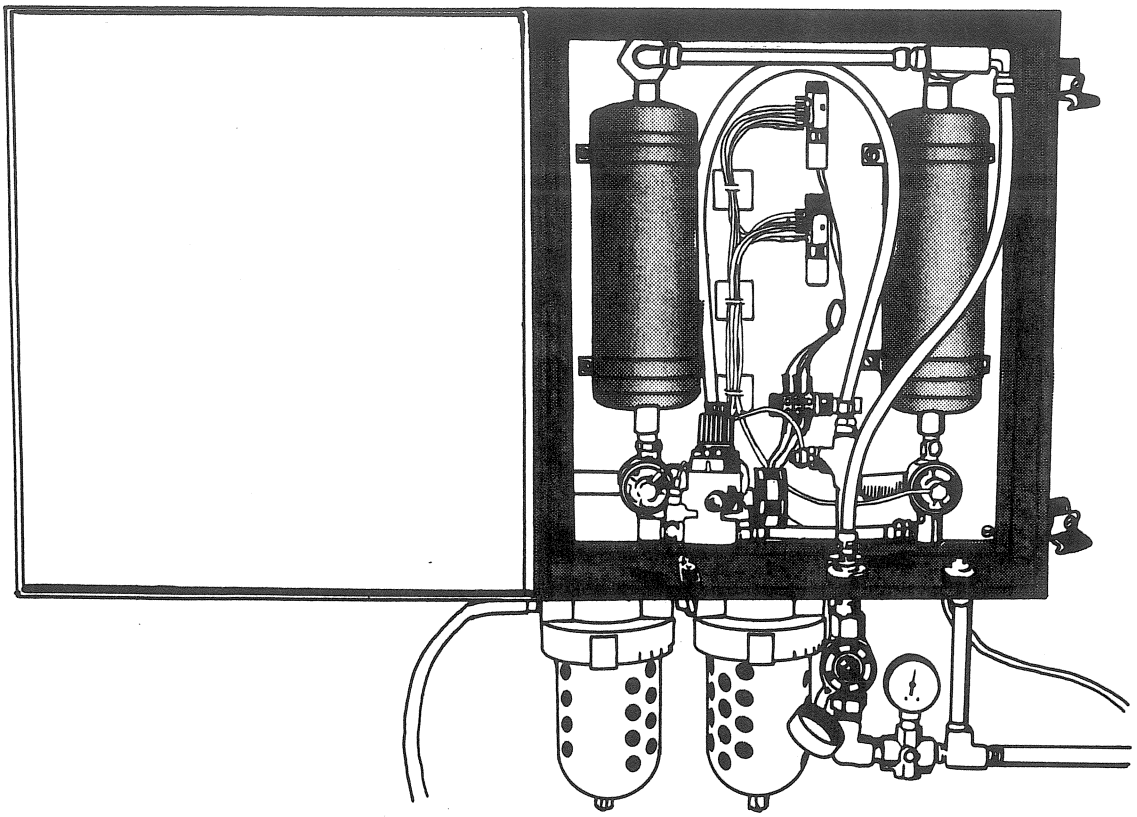

Figure B-2.2. Internal view of dryer assembly.

Item	Designation	Function	Explanation
1	POWER CORD	Brings power to the dryer.	Power to operate the dryer is obtained by plugging this cord into the proper receptacle at the rear of the power controller.
2	FUSE	Protects the dryer and operator.	The fuse value has been carefully selected to interrupt power to this assembly in the event of an excessive current draw.

Item	Designation	Function	Explanation
3	GAS INLET port	Allows gas supply connection.	This barbed hose fitting is for 3/8 inch ID air hose. Inlet pressure must be between 80 to 120 psig. or 5.6 to 8.4 kg/cm^2.
4	GAS OUTLET port	Allows gas to exit from the dryer.	This port offers a means for connecting the system to the dryer so the conditioned gas can be supplied to the primary heat exchanger. This connects to the GAS INPUT port on the POWER CONTROLLER back panel.
5	MOISTURE indicator	Indicates if outlet air is dry.	A color change in this component indicates that the dryer is malfunctioning allowing poorly conditioned gas to enter the system.
6	PRESSURE regulator	Permits setting of outlet gas pressure to the system.	Manually adjustable valve on the outlet port of the dryer. Pressure should not exceed 50 psig.
7	PRESSURE gauge	Indicates outlet gas pressure in psig..	Allows the user to adjust the PRESSURE regulator to the required pressure without any external equipment.

B-2.3 AIR DRYER MANUAL

A copy of the air dryer manual is included in this section for your assistance.

B-2.3.1 GENERAL

The TAD-1000 assembly removes solids, liquids and water vapor from compressed air. The unit is fully automatic and is controlled by a 12 volt dc signal from an external microprocessor.

B-2.3.2 SPECIFICATIONS

Inlet Pressure	Minimum 80 psig. Recommended 100 psig Maximum 125 psig.
Inlet Temperature	Maximum 50°C (125°F)
Filtration Level	0.3 micron
Dew Point	-57°C (-70°F)
Outlet Flow	Maximum 10 SCFM
Purge Flow	2.6 SCFM
Air Connections	Barb Fitting for 3/8" hose

Mounting - mounts vertical and upright and attaches to 2" pipe with clamps provided.

Dimensions - Maximum Envelope 60 cm X 35.6 cm X 16.7 cm (24" X 14" X 6½")

Electric Control - 12 volt dc to SV-1 for Timing Control
12 volt dc for System On-Off Control

Electric Connections - Screw terminals inside enclosure are pre-wired to multipin connector.

B-2.3.4 MOUNTING

Mount dryer vertical and upright with filters at bottom. There are four tapped holes at the rear of the enclosure. Using the plastic clamps, bolts and lockwashers provided, secure the dryer to the vertical 2" pipe.

B-2.3.5 ELECTRICAL CONNECTIONS

Attach cable assembly to connector marked "DRYER" on power control unit.

B-2.3.6 HOSE CONNECTIONS

Two barb fittings are provided for the inlet and outlet connections. Attach fittings to dryer and connect 3/8" hose. There are 1/8" NPT connections on the bottom of filters F-1 and F-2. These filters automatically dump collected liquids. Connect drain line to suit.

B-2.3.7 ADJUSTMENTS

Pressure regulator R-1, located inside the enclosure, should be set at 30 psig. This is the gas supply for the pilot section of the solenoid valve. Pressure Regulator R-2, located outside the enclosure, can be set for the required system operating pressure.

B-2.3.8 OPERATION

THE TAD-1000 employs a prefilter (F-1) and a coalescing filter (F-2) to remove solid and liquid particles from the compressed gas. The gas then passes through a dessicant dryer where water vapor is removed. This dryer is heatless and self regenerative. Operation of the dryer is evident from the audible sound of the valves. Every 30 seconds the valves change position.

The external timer signal from the microprocessor automatically programs the gas flow through the desiccant tanks. During a 30 second interval, the gas flows through the left desiccant tank. During the next 30 second interval the gas flows through the right desiccant tank. A portion of the very dry gas (purge gas) is used to regenerate the offstream desiccant tank. The purge gas exhausts through the mufflers on the two power valves PV-1, PV-2. This purge air flow rate is 2.6 SCFM at 80 psig. Additionally, there is a surge flow through the muffler every 30 seconds as the valves shift position.

B-2.3.9 MAINTENANCE

Filter cartridges should be replaced periodically. A general "rule of thumb" recommends replacement every six months. Actual quality of input gas may necessitate more frequent replacement. The automatic drains in the two filters should be checked periodically and cleaned as required. Sludge build-up can prevent the drains from operating properly.

In the event of a malfunction refer to drawing B4358 on page B-2.8.

B-2.3.10 PARTS LIST

ITEM	Schematic DESIGNATION	Manufacturer PART NUMBER	DESCRIPTION	QTY	Temptronic P/N
1.	F-1	F20-02-F00	Prefilter	1	
		FRP 95-236	Replacement Cartridge	1	CS 00530
		GRP 95-714	Replacement Drain	1	CS 00540
2.	F-2	M20-02-F00	Coalescing Filter	1	
		MTP 95-549	Replacement Cartridge	1	CS 00550
		GRP 95-714	Replacement Drain	1	
3.	R-1,2	R00-02-000	Pressure Regulator	2	MM 03350
4.	G-1	GRP 95-227	Pressure Gauge (0-160 psig.)	1	
5.	G-2	Fig. 23K 1½" 0-160	Pressure gauge (0-160 psig.)	1	
6.	SV-1,2	D2120K00	Solenoid valve (12 volt dc)	2	VA 00180
7.	MI-1	AMI-1FM3	Moisture Indicator	1	MM 03340
8.	PV-1,2	250A-3-10-20	Main Power Valve	2	KK 00900
9.	DT-1,2	40197FF	Dessicant Tank	2	ZZ 03520
10.	AD-1,2	40410	Gas Director Kit	1	ZZ 03510
11.	M-1,2	11303	Muffler	1	ZZ 02340
12.	-	OKC-270R1	Cable Assembly	1	ZZ 03500

B-2.3.11 ACCESSORIES PACKAGED LOOSE

	PART NUMBER	DESCRIPTION	QTY
3/8"-16 X 3½"		Socket Head Bolt	4
3/8"		Lockwasher	4
6603 SPP		Clamp Half	4
124-HPL-6-4		Barb Fitting	2

REVISIONS				
ZONE	LTR	DESCRIPTION	DATE	APPROVED
	A	RELEASED	3-7-85	MJP

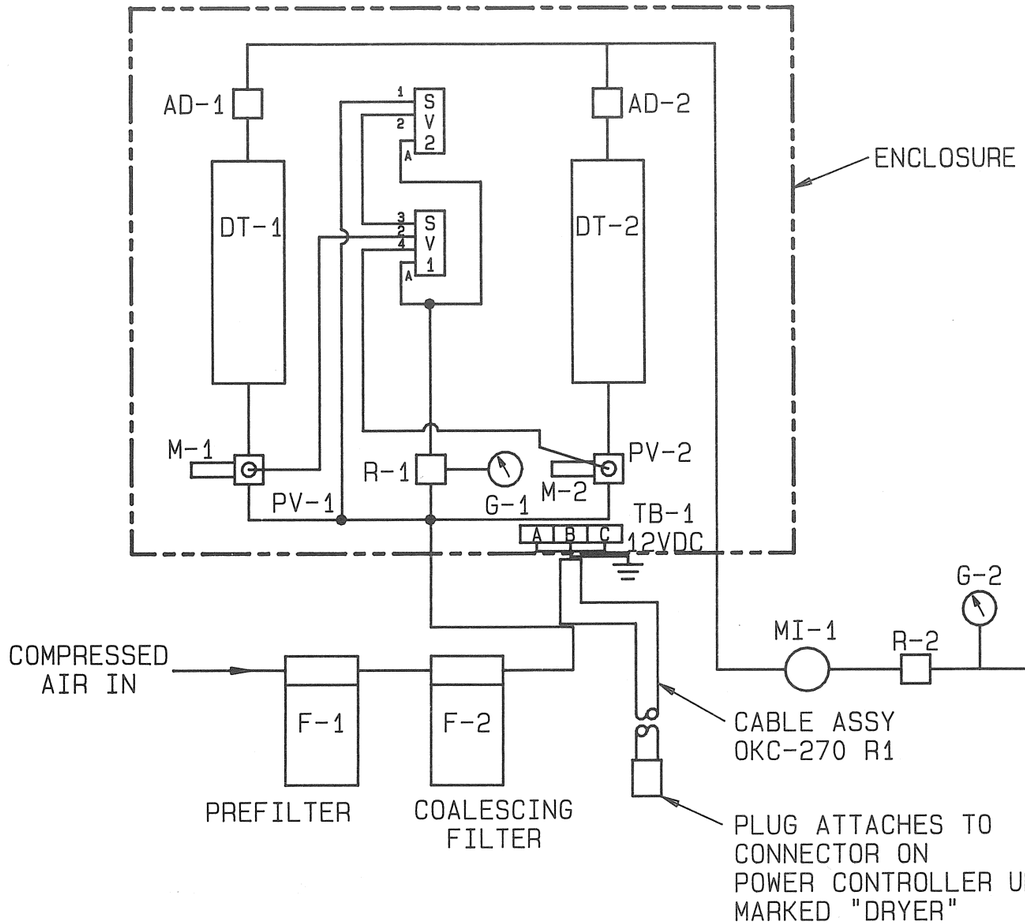

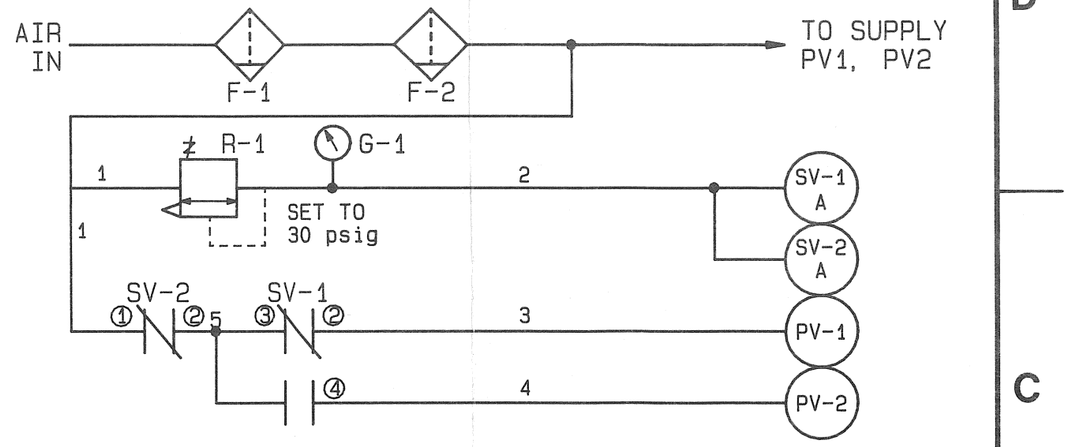

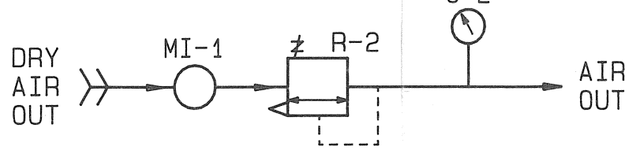

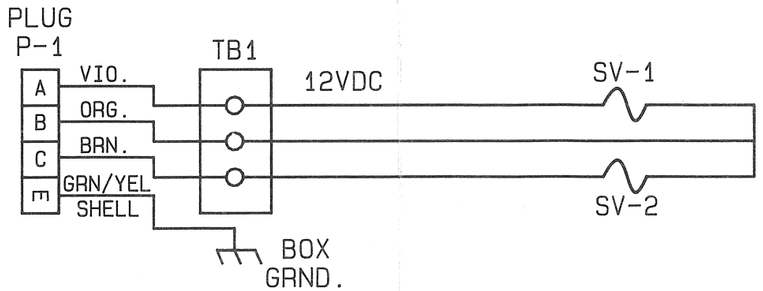

APPENDIX B-2	LMS1190	TROUBLE MANUAL
NEXT ASSY	USED ON	SYSTEM
APPLICATION		

UNLESS OTHERWISE SPECIFIED DIMENSIONS ARE IN INCHES TOLERANCES ARE:
FRACTIONS DECIMALS ANGLES
± 1/64 .XX ± .015 ± 30'
.XXX ± .005

MATERIAL

FINISH

DO NOT SCALE DRAWING

CONTRACT NO.

APPROVALS	DATE
DRAWN LDR	1-17-85
CHECKED	
ENG MJP	3-7-85

UNLESS OTHERWISE SPECIFIED RESISTANCE VALUES ARE IN OHMS ± % WATT
CAPACITANCE VALUES ARE IN ± % VOLTS

TEMPTRONIC CORP.

AIR DRYER SYS. SCHEMATIC

SIZE	CODE IDENT NO.	DRAWING NO.	REV
B		4358	A
SCALE NA		SHEET 1 OF 1	

B-2.8

B-2.4 AIR FILTER ASSEMBLY

This assembly, see drawing B4051 (next page), is offered as an option to those users who already have a dry (-70°C dew point) gas source but may require additional filtering to remove contaminates which may effect the operation of the ThermoStream^{R} System.

For this assembly to be effective, it should be located in the air line just before the ThermoStream^{R} System. The input and output barbed fittings will accept 3/8" ID reinforced hose. These hose connections should be properly clamped. Two filters are used, the first is for moisture and the second is for oil. Both have automatic relief valves which should be connected to a suitable drain/reservoir. The pressure regulator/gauge assembly is on the output side. The outlet pressure should be adjusted to that specified in the manual for the system.

REVISIONS				
ZONE	LTR	DESCRIPTION	DATE	APPROVED
	B	INITIAL RELEASE ECN# 3062	6/86	PB
	C	REVISED PER ECO# 3114	6-11-86	PB

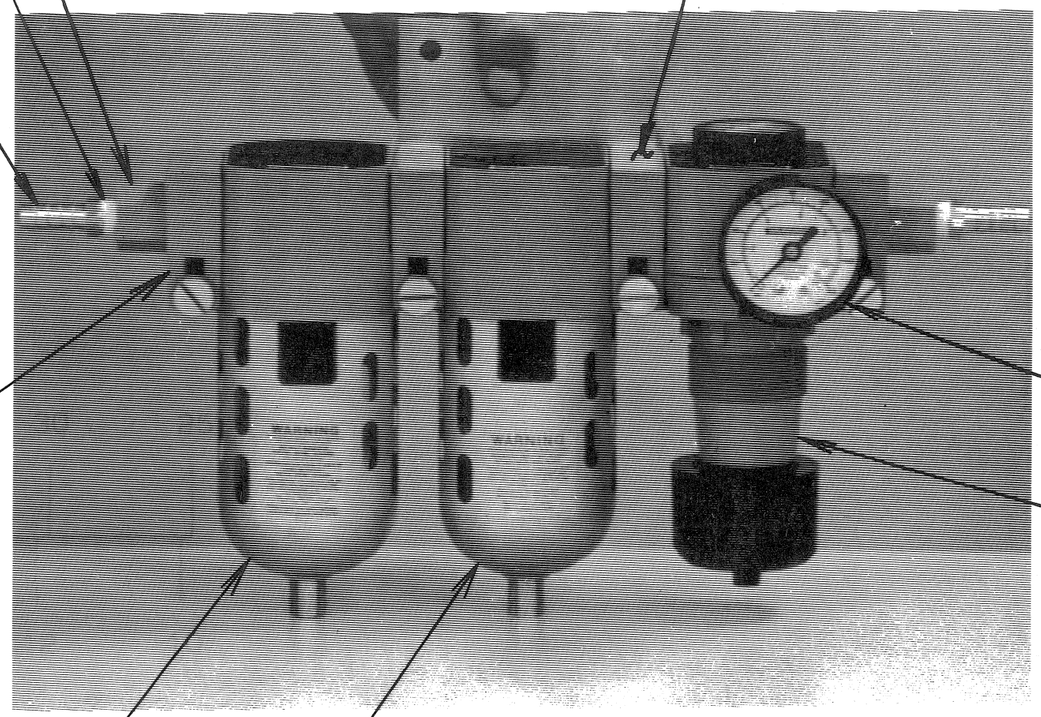

MFG. PART NO.	DESCRIPTION	QTY.	ITEM
GPA-95-969	SLEEVE WITH MOUNTING BRACKET	2	9
GPA-95-224	END BLOCK	2	8
	TEFLON THREAD SEALANT (3 PLACES)	A/R	7
* 1F6	HOSE FITTING 3/8 BARB	2	6
GPA-95-292	SLEEVE	2	5
F26/03/F00	FILTER W/ DRAIN	1	4
M26/03/000	COALESCING FILTER	1	3
R26/03/000	REGULATOR	1	2
GRP/95/229	PRESSURE GAUGE	1	1

* NOTE 1: TO SUPPLIER ONLY. PLACE ITEM 6 QTY 2 IN BOX W/ASSEMBLY

NOTE 2: MUST HAVE CERTIFICATE OF COMPLIANCE - QTY. 1 PER SHIPMENT

TP0412 LISTING		TP0412
NEXT ASSY	USED ON	SYSTEM
APPLICATION		

UNLESS OTHERWISE SPECIFIED DIMENSIONS ARE IN INCHES
TOLERANCES ARE:
FRACTIONS DECIMALS ANGLES
± 1/64 .XX ± .015 ± 30'
.XXX ± .005

MATERIAL

FINISH

DO NOT SCALE DRAWING

CONTRACT NO.

APPROVALS	DATE
DRAWN BD	10/85
CHECKED PB	11/85
ENG	

UNLESS OTHERWISE SPECIFIED
RESISTANCE VALUES ARE IN OHMS ± % WATT
CAPACITANCE VALUES ARE IN ± % VOLTS

TEMPTRONIC CORP.

AIR LINE
PRE-FILTER ASSEMBLY ZAD40510
(CONTROL DRAWING)

SIZE	CODE IDENT NO.	DRAWING NO.	REV
B		4051	C
SCALE		SHEET 1 OF 1	

FOTOBEAM/BROOKSIDE

B-2.10

RUN @ 60 FPM
7 BULBS

APPENDIX B-3
TP0412A THERMOSTREAM® THERMAL CAP & ENCLOSURE OPTIONS

B-3.1 INTRODUCTION

The Thermal Cap or its equivalent is an integral functional assembly which interfaces the ThermoStream® System to the tester and should always be in place when the TP0412A ThermoStream® System is being utilized. Currently, three Thermal Cap assemblies are available for the TP0412A ThermoStream® System, see page B-3.2.

B-3.2 THERMAL CAPS

The single wall Thermal Cap is constructed from polycarbon, with a 3.75" ID., to withstand the temperatures which the system is capable of providing. This assembly, in conjunction with the supplied enclosures or shrouds, create a cavity around the test site and DUT. Together they restrict the temperature controlled gas stream from escaping from the test area before sufficient heat transfer has occurred. This Thermal Cap allows normal cycling of the system from one temperature extreme to the other and stabilization at the desired test temperature for short time periods.

Two other Thermal Caps that have double wall construction are available. They allow a portion of ambient dry gas supplied to the ThermoStream System to circulate between them as well as over the outer surface of the outer ring. The temperature controlled gas is exhausted out the side of the upper portion of the Thermal Cap through an insulated, flexible hose. The unique design will allow stabilization or soaking at the desired test temperatures for much longer time periods, especially below ambient, because the formation of condensation or frost is eliminated.

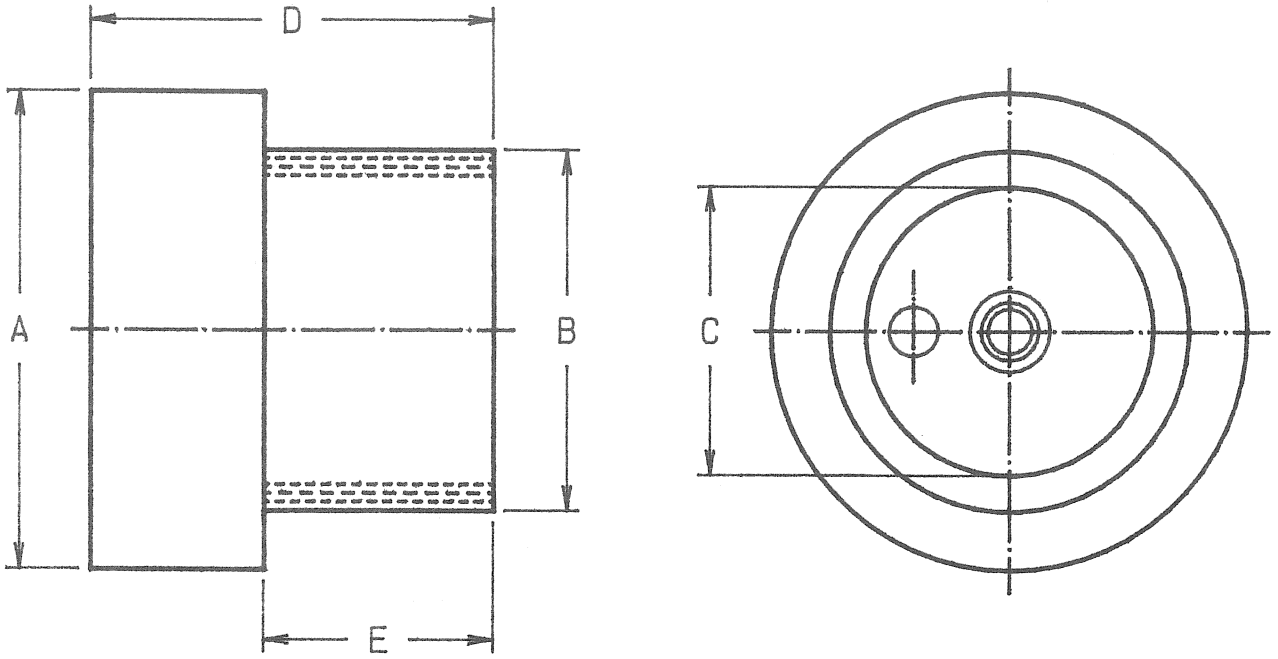

(SHOWN AS DBL. WALL)

STYLE	* THERMOCAP KIT P/N	THERMOCAP ASSY. P/N	DIMENSIONS				
			A	B	C	D	E
SINGLE WALL	ZAK42550	SA40430	4.25"♦	4.00"♦	3.75"♦	3.70"	3.25"
DBL. WALL	ZAK42540	SA40500	4.50"♦	3.66"♦	2.42"♦	4.50"	2.12"
DBL. WALL	ZAK42480	SA40490	6.62"♦	5.08"♦	4.04"♦	4.50"	2.12"

* INCLUDES NON-CONDUCTIVE SHROUD KITS. CONDUCTIVE MAY BE SUBSTITUTED BY REQUEST.

♦-IS DIAMETER SYMBOL.

B-3.3 FLEXIBLE EXTENDER

The Flexible Extender, see Figure B-3.1, is an optional accessory designed to allow interfacing of the TP0412A ThermoStream system to difficult-to-reach components and customed test fixtures. It can also be used to supply and direct temperature controlled air into restricted areas in other equipment.

This accessory easily slips onto the end of the WAND and interfaces with each of the Thermal Caps and accessory Printed Circuit Board Enclosures. It is 18" in length, approximately 2" in diameter and will accommodate the system entire temperature range.

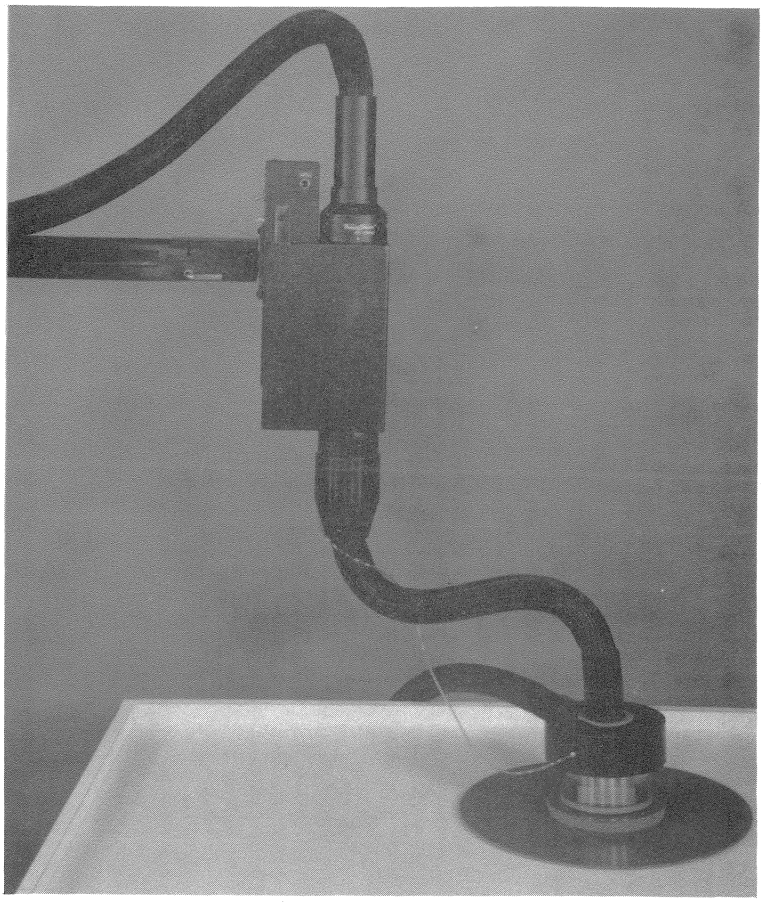

B-3.1. Flexible Extender Shown with Large Double Wall Thermal Cap.

B-3.4 PRINTED CIRCUIT BOARD ENCLOSURES

There are Two printed circuit board (PCB) enclosures (MiniZone and MiniDome) are offered as optional accessories to the TP0412A ThermoStream system. These enclosures are specially constructed chambers (see Appendix C-6) for the testing of small PCBs or circuit arrays at temperatures between -70°C and +150°C on room temperature testers.

****
* CAUTION *
****

A PCB ENCLOSURE OPTION WITH A WINDOW SHOULD NEVER BE OPERATED AT TEMPERATURES ABOVE +150°C. TEMPERATURES ABOVE +150°C CAUSE THE WINDOW FILMS TO STRETCH.

B-3.4.1 MiniZone Enclosure

The MiniZone enclosure is designed for edge card applications. As supplied, it is a complete assembly which easily attaches to the PRIMARY HEAT EXCHANGER (see drawing D4764-CFG) in place of the Thermal Cap directly or with the Flexible Extender.

B-3.4.2 MiniDome Enclosure

The MiniDome enclosure is designed for Bed-Of-Nails applications. As supplied, it is a complete assembly which easily attaches to the PRIMARY HEAT EXCHANGER (see drawing D ZSA48280-CFG) in place of the Thermal Cap with the Flexible Extender.

Both the top and bottom covers are easily removed. The bottom cover can be cut to permit the insertion of the test socket or connector. The top cover is supplied with a specially designed patented window which permits single point electrical probing of test points on the PCB under test, without removing the PCB from the test temperature environment.

APPLICATION			REVISION			
NEXT ASSY	USED ON	SYS	LTR	DESCRIPTION	DATE	APPROVED
			A	INITIAL RELEASE	4-8-86	PB

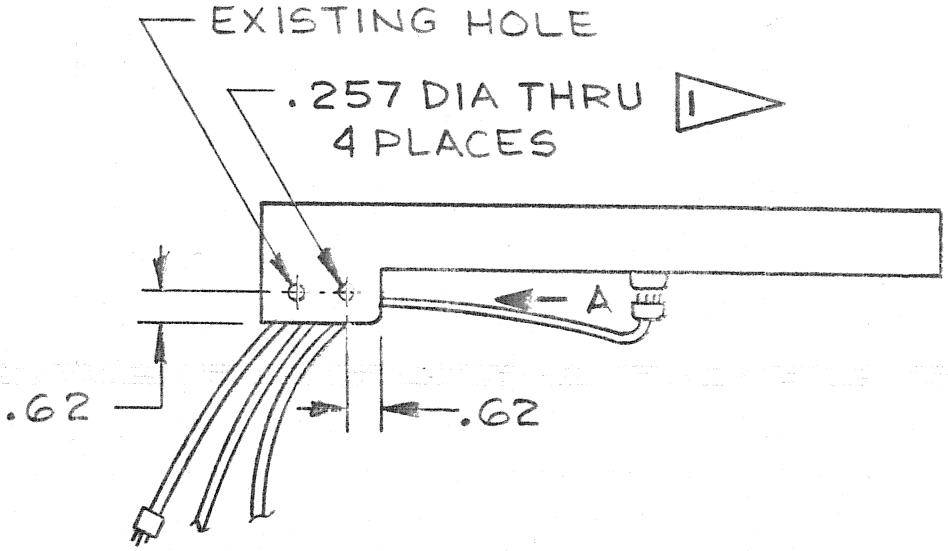

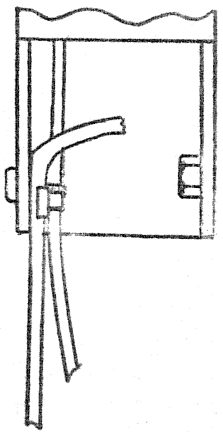

VIEW A

NOTES;

1. EARLY MODELS CUSTOMER WILL BE REQUIRED TO DRILL A .257 DIA THRU HOLE ON CONVENIENT SIDE.

UNLESS OTHERWISE SPECIFIED DIMENSIONS ARE IN INCHES TOLERANCES ARE: FRACTIONS ±1/64 DECIMALS .XX ± .015 ANGLES ± 30' .XXX ± .005	CONTRACT NO.	TEMPTRONIC CORP.	
MATERIAL —	APPROVALS / DRAWN ESPINOLA	DATE 3/26/86	FOOT SWITCH CABLE ROUTING
FINISH —	CHECKED — / ENG		SIZE A · CODE IDENT NO. JAN 25 1988 · DRAWING NO. LMS 4757 · REV A
DO NOT SCALE DRAWING	UNLESS OTHERWISE SPECIFIED RESISTANCE VALUES ARE IN OHMS ± % WATT CAPACITANCE VALUES ARE IN ± % VOLTS	SCALE —	SHEET 1 OF 1

REVISIONS				
ZONE	LTR	DESCRIPTION	DATE	APPROVED
	A	INITIAL RELEASE ECN 861	5/15/86	

NOTES:

1. MAKE SURE HEATER HOUSING IS SECURE IN STAND HEAD. SYSTEM IS UNPLUGGED AND AIR DISCONNECTED.
2. TILT STAND HEAD LEFT OR RIGHT 90° AND SECURE IN THIS POSITION
3. POSITION ENCLOSURE ADAPTER ON END OF HEATER HOUSING *TAKE CARE THAT GROUND WIRE MOVES UP INTO HEATER HOUSING AND DOES NOT GET PINCHED, RECOMMEND ENCLOSURE BE POSITIONED SO THAT VENT HOLE OR VENT LINE IS TO EITHER SIDE OR TO REAR AWAY FROM OPERATOR.
4. ALIGN 2-THRU HOLES IN ENCLOSURE ADAPTER WITH 2-HEATER HOUSING HOLES SELECTED.
5. INSERT #6-32 SCREWS THRU ENCLOSURE AND INTO MOUNTING HOLES IN HEATER HOUSING AND TIGHTEN.
6. ASSEMBLE ENCLOSURE TO ENCLOSURE ADAPTER USING 6 SCREWS & WASHERS SUPPLIED.
   a. REMOVE SEAL PLUG FROM STAND FITTING.
   b. INSTALL 1/16 BARB FITTING SUPPLIED, INTO STAND FITTING.
   c. ATTACH AIR LINE SUPPLIED, BETWEEN STAND FITTING AND ENCLOSURE FITTING.
   d. INSERT EXHAUST TUBE ASSY. INTO ENCLOSURE ADAPTER AS SHOWN, MAKE SURE VENT LINE IS ALL THE WAY IN AND FULLY SEATED.
   * AIR LEAKAGE CAN OCCUR IF GOOD SEAL NOT MADE.
7. BOTTOM COVER MAY BE MODIFIED BY CUSTOMER TO MOUNT A PRINTED CIRCUIT BOARD CONNECTER, SUPPORT AND WIRING.
8. FOR ADDITIONAL INFORMATION, REFER TO SECTION B-3 (LMS 1200) OF SYSTEM MANUAL.
9. REFER TO DETAIL "A" FOR WINDOW SET CONFIGURATION.

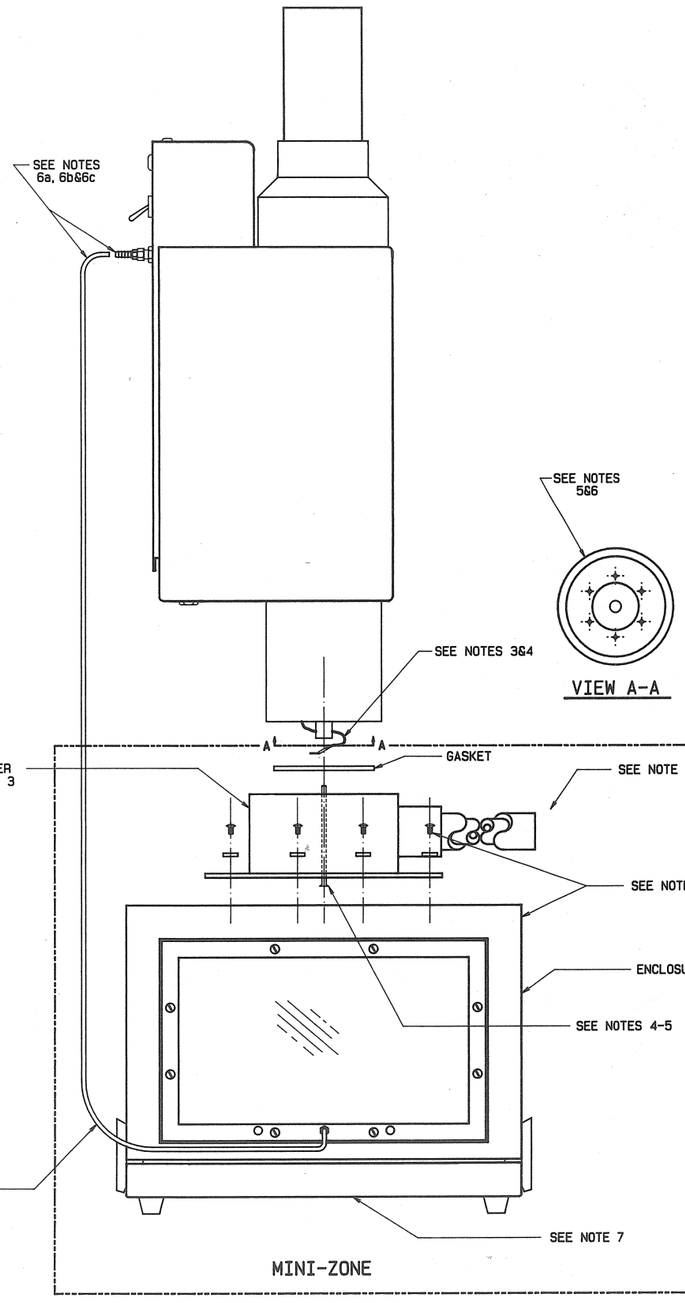

VIEW A-A

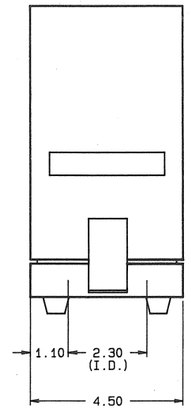

VIEW "B-B"

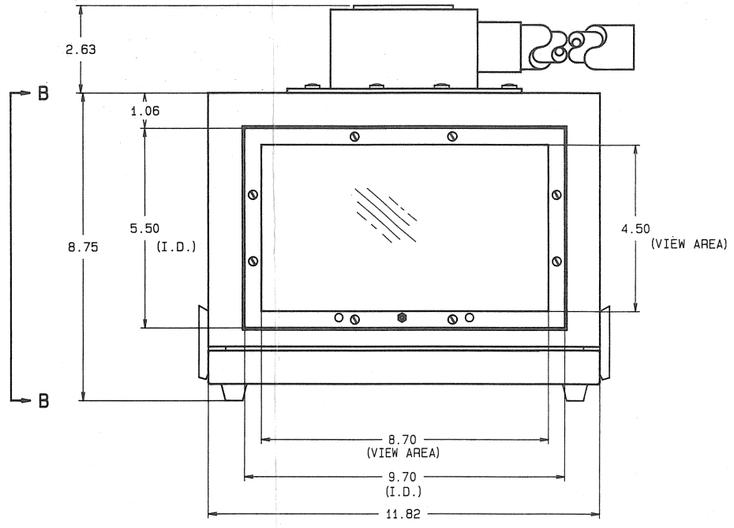

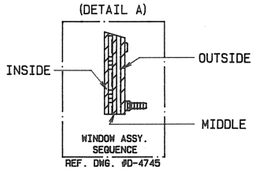

TEMP. STOCK NO.	NOMENCLATURE OR DESCRIPTION	MFG. PART NO.	ITEM
	PARTS LIST		

NEXT ASSY	USED ON	A12 SYSTEM	
APPLICATION			

UNLESS OTHERWISE SPECIFIED DIMENSIONS ARE IN INCHES
TOLERANCES ARE:
FRACTIONS ± 1/64 DECIMALS .XX ± .01 .XXX ± .005 ANGLES ± 30'
MATERIAL
FINISH
DO NOT SCALE DRAWING

CONTRACT NO.

TEMPTRONIC CORP.

APPROVALS	DATE
DRAWN L. Stark	5-5-86
CHECKED PEB	5-6-86
ENG	

UNLESS OTHERWISE SPECIFIED RESISTANCE VALUES ARE IN OHMS ± % WATT
CAPACITANCE VALUES ARE IN ± % VOLTS

MINI-ZONE CONFIGURATION DRAWING

SIZE	CODE IDENT NO.	DRAWING NO.	REV
D		4764-CFG	A

SCALE 1/2 SHEET 1 OF 1

FOTOBEAM/BROOKSIDE 0220-D

REVISIONS				
ZONE	LTR	DESCRIPTION	DATE	APPROVED
	A	INIT. REL'D PER ECN#ZSA48280-CFG-A		

"CAUTION" MAKE SURE AIR IS OFF BEFORE STARTING MINI-DOME ATTACHMENT

NOTES;

1. REMOVE ANY EXISTING ACCESSORY FROM HEATER ASSEMBLY.
2. SLIP SILICONE COLLAR OF FLEXIBLE EXTENDER OVER END OF HEATER ASSEMBLY. MAKE SURE HEATER IS FULLY INSERTED INTO COLLAR AND SEATED FULLY.
3. REMOVE PLUG FROM AIR FITTING LOCATED AT REAR OF STAND HEAD.
4. INSTALL FITTING SUPPLIED WITH ACCESSORIES TUBE.
5. CONNECT WINDOW AIR LINE FROM STAND FITTING TO WINDOW FITTING, AIR LINE SUPPLIED WITH ACCESSORIES TUBE.

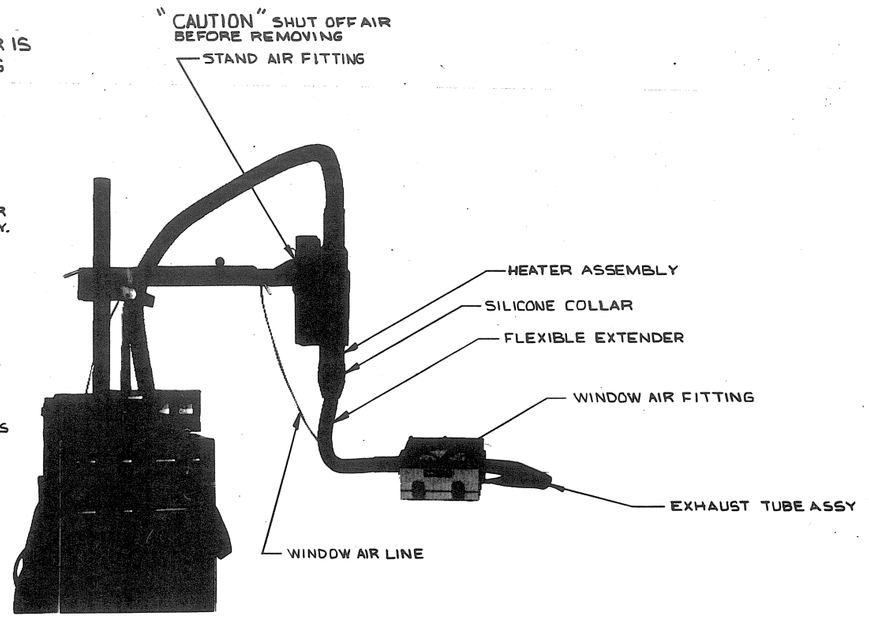

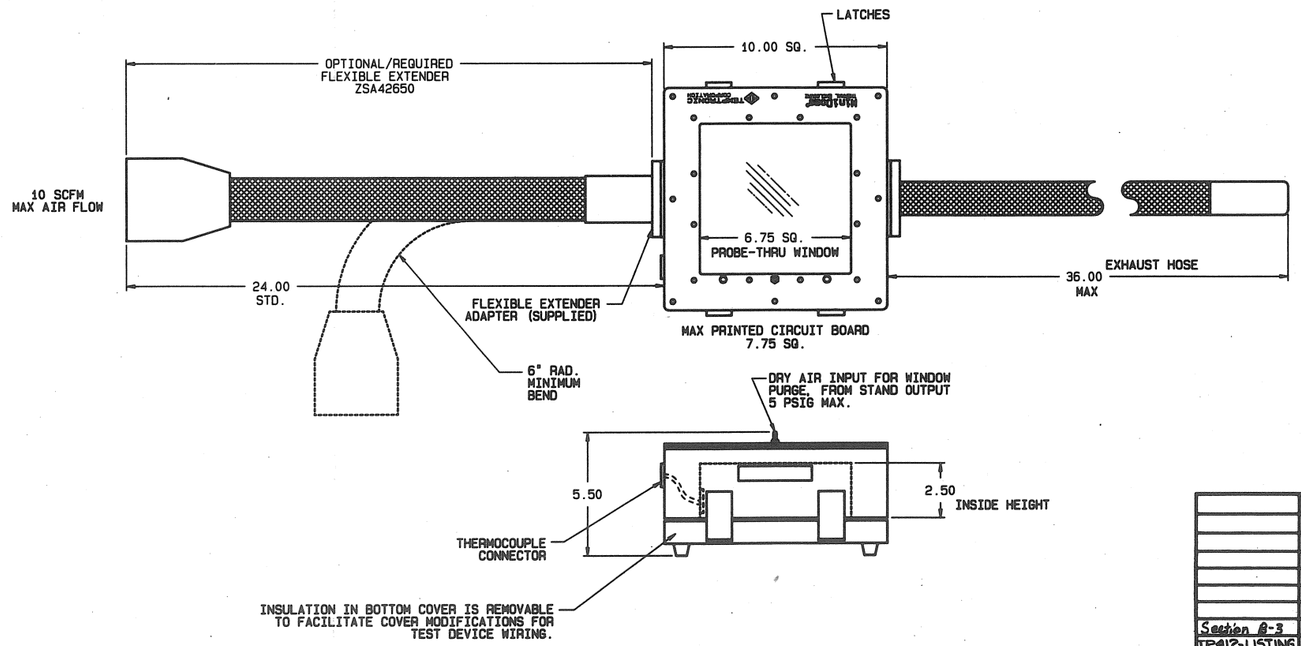

SPECIFICATIONS:

WINDOW SIZE (ie PROBING AREA)	- 6.75" X 6.75" SQ.
INSIDE DIMENSIONS	- 7.75" X 7.75" SQ. X 2.50" HEIGHT
OUTSIDE DIMENSIONS	- 10" X 10" SQ. X 5.50" HEIGHT
WINDOW AIR PRESSURE	- 5 PSIG
AIR FLOW THROUGH ENCLOSURE	- 10 SCFM
OPERATING TEMPERATURE	- HIGH +150°C - LOW -60°C
THERMOCOUPLE CONNECTIONS	- COPPER CONSTANTAN T=TYPE MINIATURE CONNECTORS

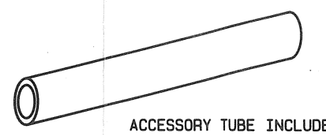

ACCESSORY TUBE INCLUDES:

-SURFACE WINDOW MATERIAL
-DRY AIR HOSE
-DRY AIR BARBED FITTING FOR STAND END.

Section B-3	Master		
TP412-LISTING		TP0412	
NEXT ASSY	USED ON	SYSTEM	
APPLICATION			

UNLESS OTHERWISE SPECIFIED DIMENSIONS ARE IN INCHES
TOLERANCES ARE:
FRACTIONS ± 1/64 DECIMALS .XX ± .01 .XXX ± .005 ANGLES ± 30'
MATERIAL
FINISH
DO NOT SCALE DRAWING

TEMP. STOCK NO.	NOMENCLATURE OR DESCRIPTION	MFG. PART NO.	ITEM
	PARTS LIST		

CONTRACT NO.

TEMPTRONIC CORP.

APPROVALS	DATE
DRAWN G.ESPINOLA	8-11-86
CHECKED	8-9-87
ENG Jim Cregin	2-10-87

CONFIGURATION MINIDOME

UNLESS OTHERWISE SPECIFIED RESISTANCE VALUES ARE IN OHMS ± % WATT
CAPACITANCE VALUES ARE IN ± % VOLTS

SIZE	CODE IDENT NO.	DRAWING NO.	REV
D		ZSA48280-CFG	A

SCALE | SHEET 1 OF 1

B-3.4.3 PCB ENCLOSURE FEATURES

Item	Designation	Function	Explanation
1	PROBE THROUGH WINDOW(S)	Permits viewing of and single point electrical probing of test points on the PCB under test.	A patented, multiple-film window with dry air circulated between the films to minimize or eliminate condensation on the films. Probing of the PCB is accomplished by piercing the films with the probe.
2	AIR SUPPLY HOSE	Supplies approx. 1SCFM of -60°C dew point gas to each window.	¼" OD clear polyurethane hose(s) which connect between the barbed fitting(s) on the window(s) and the STAND barbed fitting.
3	EXHAUST HOSE	Directs the exhaust gas of the PCB ENCLOSURE away from PERSONNEL and the TESTER.	Extremely hot or cold exhaust from the PCB ENCLOSURE COULD HARM either the TESTER or the TESTER OPERATOR. This removable hose is designed for temperatures between -70°C and +150°C.

B-3.4.4 WINDOW FILM REPLACEMENT

The window assembly has been designed to permit replacement of the film in the event the assembly becomes ineffective due to the number of punctures made or it has been exposed to excessive heat.

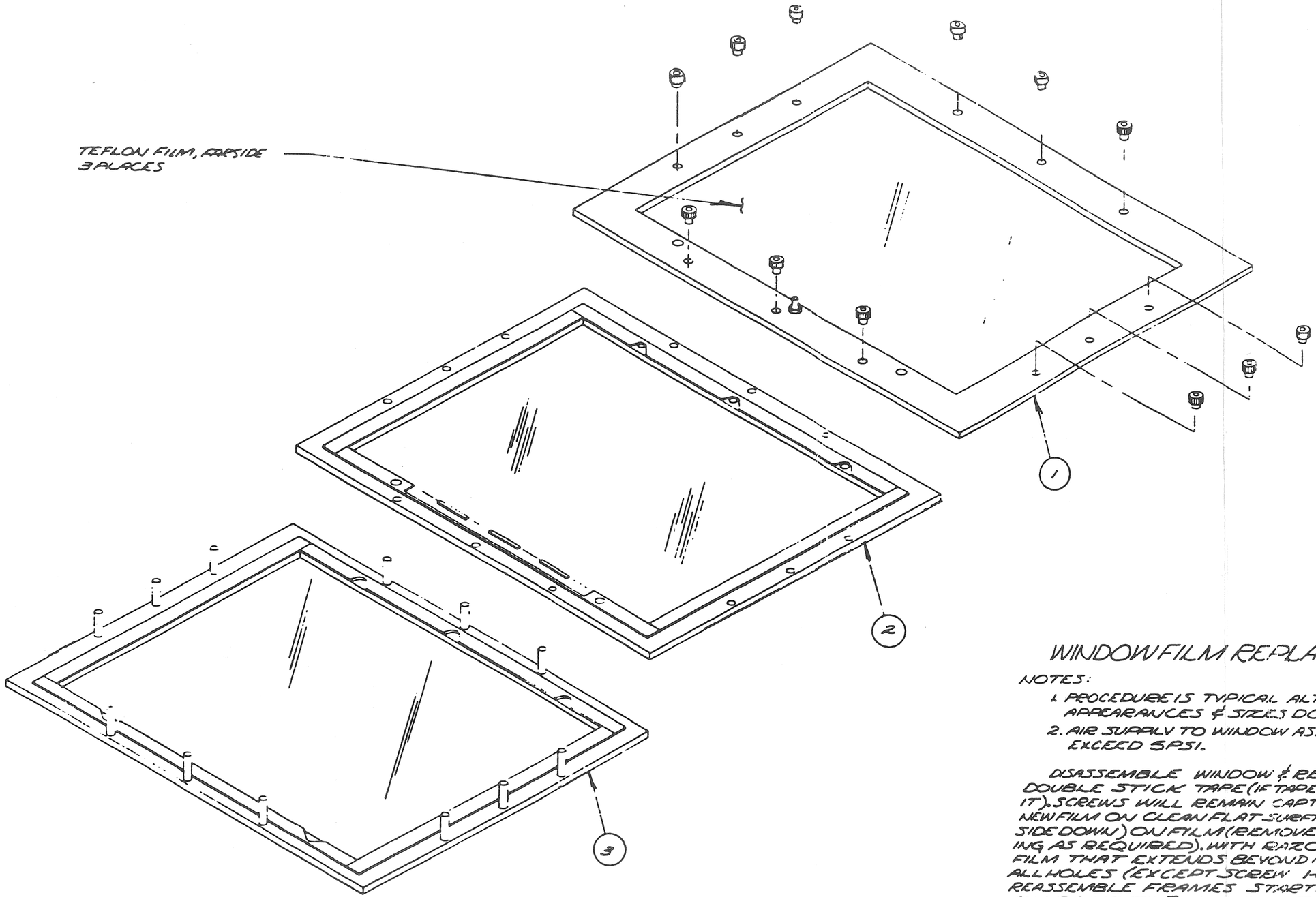

WINDOW FILM REPLACMENT PROCEDURE

NOTES:

1. PROCEDURE IS TYPICAL ALTHOUGH WINDOW APPEARANCES & SIZES DO VARY
2. AIR SUPPLY TO WINDOW ASSY. SHOULD NOT EXCEED 5PSI.

DISASSEMBLE WINDOW & REMOVE OLD FILM FROM DOUBLE STICK TAPE (IF TAPE HAS LOST TACK, REPLACE IT). SCREWS WILL REMAIN CAPTIVE ON FRAME #3. PLACE NEW FILM ON CLEAN FLAT SURFACE & LAY FRAMES (TAPE SIDE DOWN) ON FILM (REMOVE WRINKLES BY STRETCHING AS REQUIRED). WITH RAZOR TYPE KNIFE REMOVE FILM THAT EXTENDS BEYOND FRAMES. CUT FILM FROM ALL HOLES (EXCEPT SCREW HOLES) IN THE FRAMES. REASSEMBLE FRAMES STARTING WITH FRAME #3 AND GOING TO #1. TIGHTEN THUMBNUTS DOWN TO JUST START TO COMPRESS FOAM RUBBER FRAME SEALS. SCREWS WILL PUNCH SCREW HOLES IN FILM AS FRAMES ARE ASSEMBLED

REVISIONS				
ZONE	LTR	DESCRIPTION	DATE	APPROVED
	D	ECN 4100D	7-13-87	

REV	ECN NO	DATE
A	RELEASED	12-20-83
B	2408	5-4-84
C	2572	11-14-84
D	4100D	

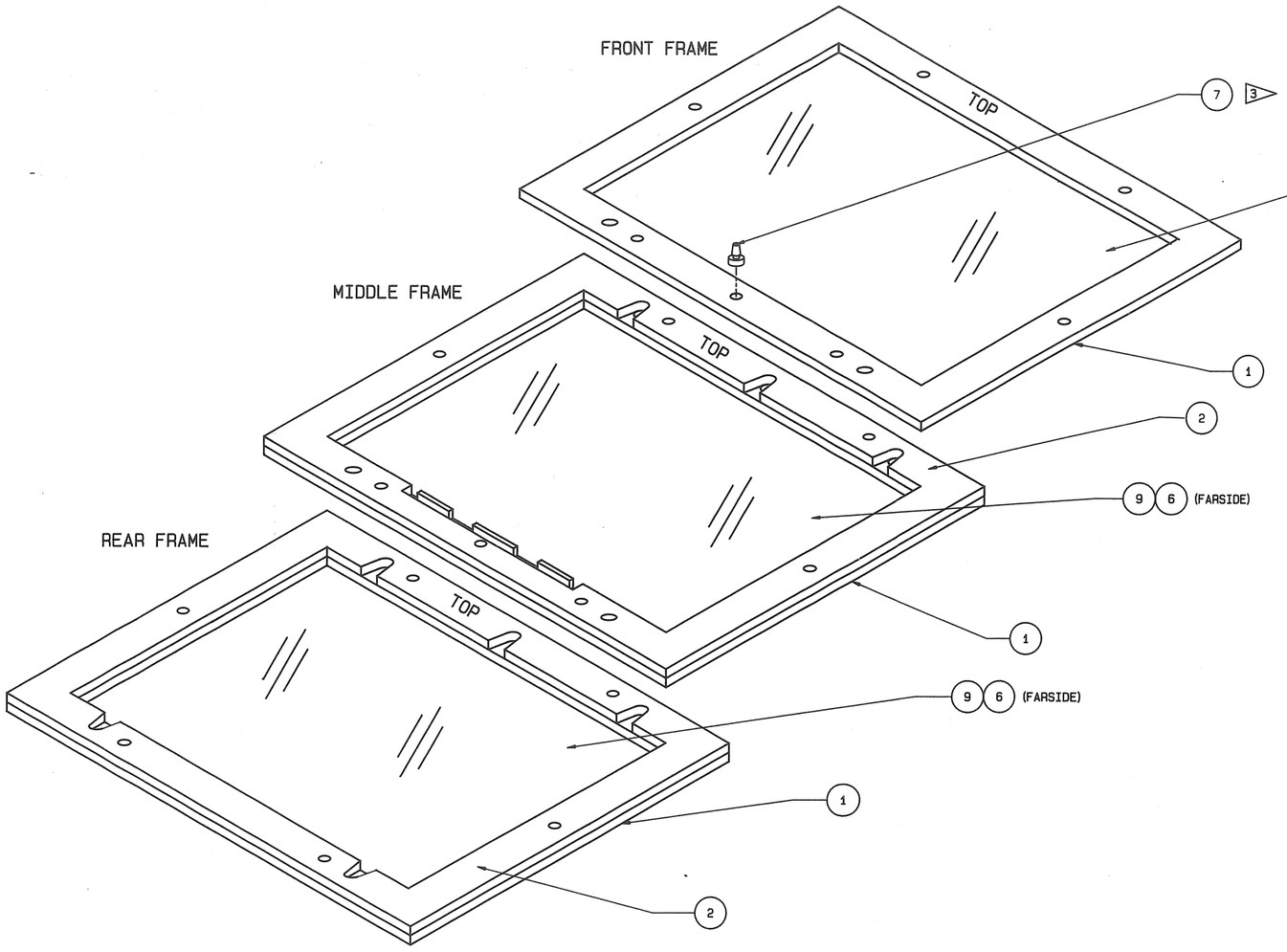

WINDOW FILM REPLACEMENT PROCEDURE

NOTES:

1- PROCEDURE IS TYPICAL ALTHOUGH WINDOW APPEARANCES & SIZES DO VARY.

2- AIR SUPPLY TO WINDOW ASSY. SHOULD NOT EXCEED 5-PSI.

DISASSEMBLE WINDOW ASSY & REMOVE OLD FILM FROM DBL. STICK TAPE. (IF TAPE HAS LOST TACK REPLACE IT). PLACE NEW FILM ON CLEAN FLAT SURFACE & LAY FRAMES (TAPE SIDE DOWN) ON FILM. (REMOVE WRINKLES BY STRETCHING FILM UNTIL GONE). WITH RAZOR KNIFE REMOVE FILM EXTENDING BEYOND FRAMES. CUT FILM FROM ALL HOLES ON FRAMES.

3

(BE SURE TO REMOVE FILM COVERING BARB HOLE PRIOR TO ASSY.)

NEXT ASSY	USED ON	SYSTEM
D3335	854-012	

APPLICATION

UNLESS OTHERWISE SPECIFIED DIMENSIONS ARE IN INCHES
TOLERANCES ARE:
FRACTIONS ± 1/64 DECIMALS .XX ± .01 .XXX ± .005 ANGLES ± 30'

MATERIAL

FINISH

DO NOT SCALE DRAWING

TEMP. STOCK NO.	NOMENCLATURE OR DESCRIPTION	MFG. PART NO.	ITEM
	PARTS LIST		

CONTRACT NO.

TEMPTRONIC CORPORATION

APPROVALS	DATE
DRAWN L. REYNOLDS	12-20-83
CHECKED	
ENG 9.0	12-20-83

WINDOW ASSEMBLY

UNLESS OTHERWISE SPECIFIED RESISTANCE VALUES ARE IN OHMS ± % WATT
CAPACITANCE VALUES ARE IN ± % VOLTS

SIZE	CODE IDENT NO.	DRAWING NO.	REV
D		4100	D

SCALE | SHEET 1 OF 1

FOTOBEAM/BROOKSIDE

B-3.5 MiniHandler Thermal Accessory

The MiniHandler thermal accessory (see Figure B-3.2) is a multi-temperature, gravity-fed, manual handler for pre-soaking and testing packages. The temperature range covers the full MILspec thermal requirements from -55°C to +150°C when interfaced to Temptronic Corporation's ThermoStream^{R} System model TP0412A.

This accessory easily mounts to a tilt-head tester where the socket or contactor is set into the bottom of the track. It is also an effective stand-alone handler for ambient testing.

The MiniHandler receives temperature controlled air from the ThermoStream System (see Figure B-3.3) through a flexible air transfer tube (an insulated hose which slips onto the end of the WAND in place of the Thermal Cap). Test devices are pre-soaked as they approach the contactor area. The air temperature surrounding the DUT is monitored by means of a thermocouple located in the contactor area using the DUT option (see Appendix B-10).

Several MinHandler configurations are currently available to accommodate DIPs, PLCC (quad & flat pack), LCCCs and PGAs. Each Track is specifically designed to accommodate the specific device. Limited interchangeability is permitted however, it is restricted to like devices. The contactor is removeable for servicing and replacement as required.

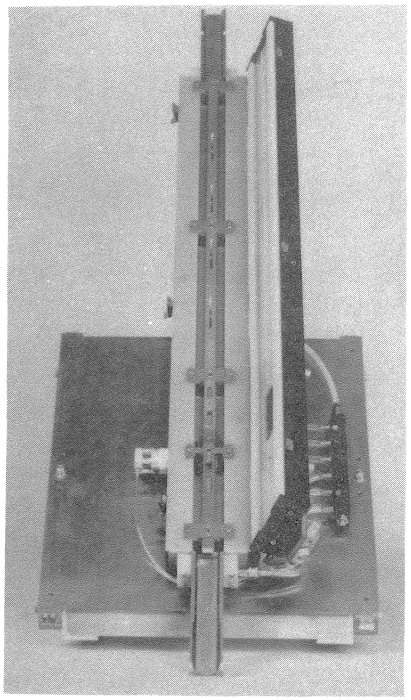

Figure B-3.2. Typical MiniHandler Thermal Accessory Configuration.

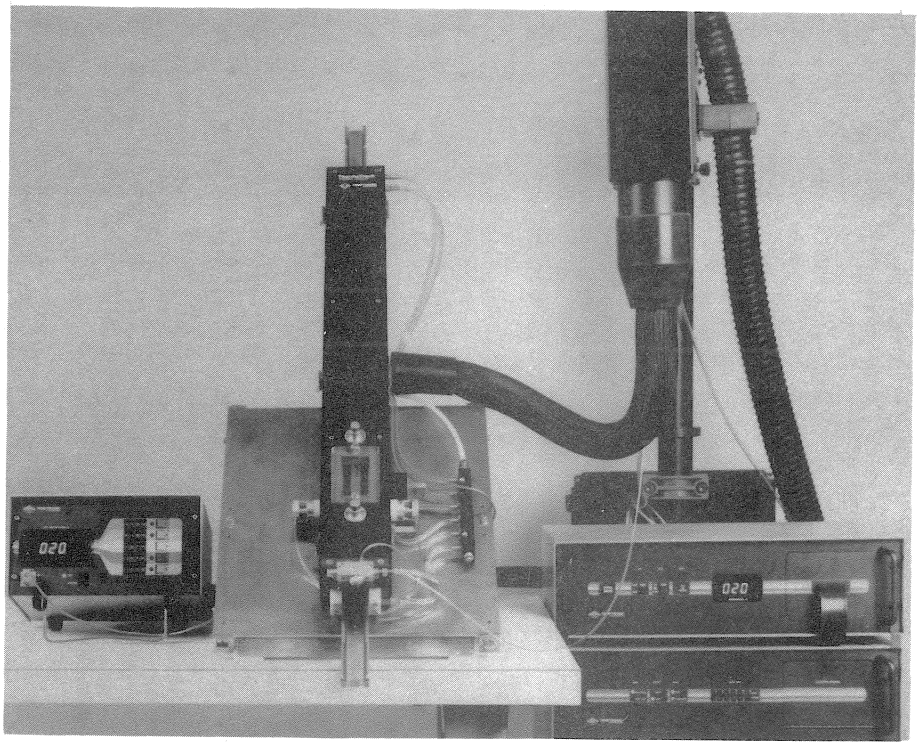

Figure B-3.3. MiniHandler Interfaced to TP0412A System With DUT Option.

APPENDIX B-4
TP0412A THERMOSTREAM® SHROUDS AND INSULATION KIT

B-4.1 SHROUDS

Shrouds or enclosures, as they are sometimes called, are provided with each of the optional ThermoCaps available for the TP0412A ThermoStream® System. The system's performance will be effected as will your desired test results, if operated without the shrouds or ThermoCap.

The shrouds are soft, flexible and can be easily aligned with the test socket. Their purpose is to encapsulate the DUT and retard the escaping temperature controlled gas enabling better heat transfer to take place.

Currently, there are five (5) standard sizes available as either conductive or non conductive. The ThermoCap and nozzle assembly have been designed to readily accommodate both types. Since the shroud simply slips over the nozzle, it is easily removed, allowing another size to be reinstalled. If the standard shrouds do not meet the requirement, then a substitute enclosure, capable of withstanding the system temperatures, should be fabricated.

The shrouds are included in the ThermoCap(s) kit. Only those sizes which will fit inside the ThermoCap(s) purchased will be supplied. It is possible to purchase replacement shroud kits, see page B-4.2.

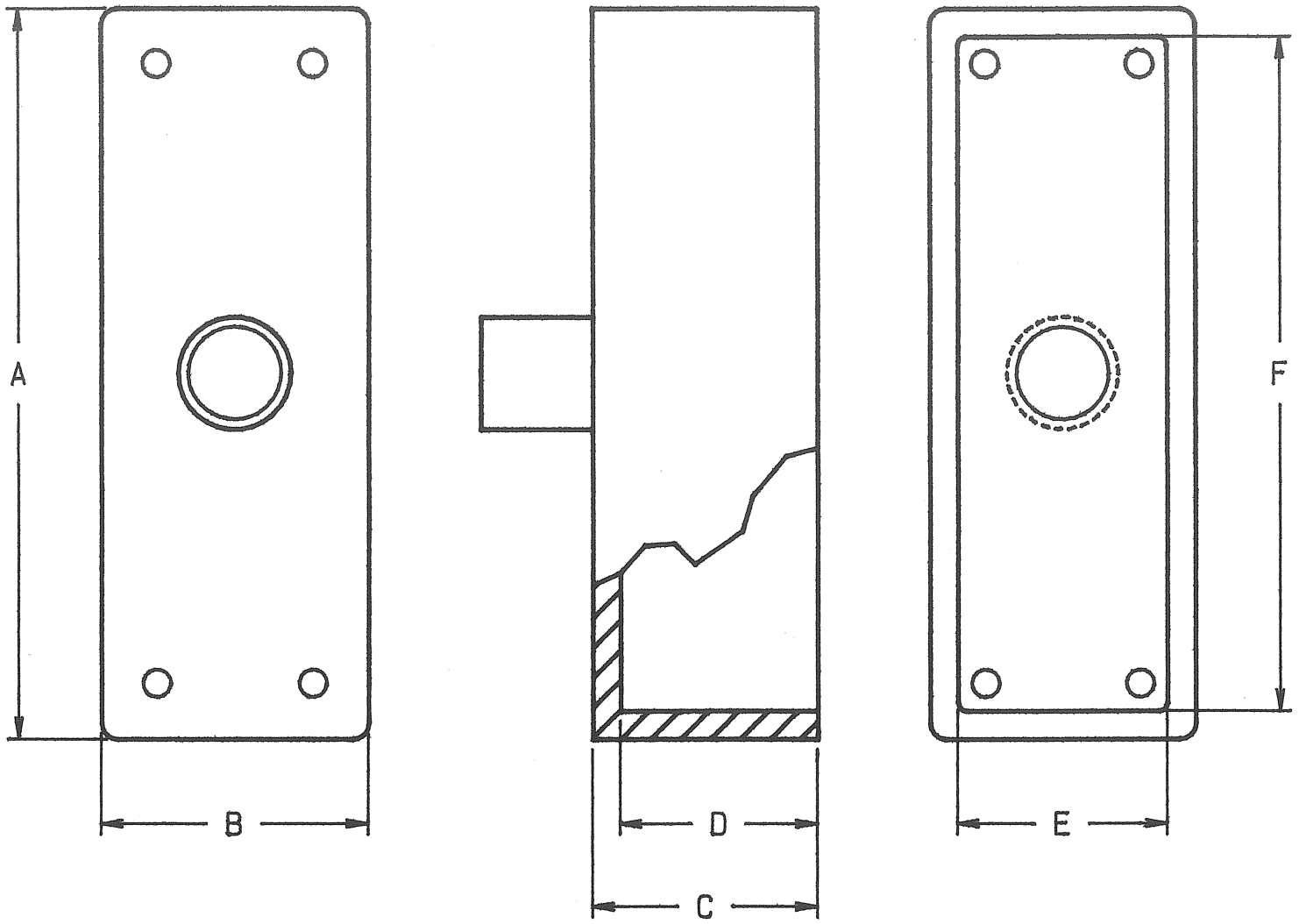

SHROUD KIT #		DIMENSIONS (INCHES)						
NON-CONDUCTIVE	CON-DUCTIVE	A	B	C	D	E	F	QTY. EACH
ZAK41311	ZAK41312	1.25"♦ 1.62" 3.05"	---- 1.25" 1.55"	.87" .87" .87"	.75" .75" .75"	1.00"♦ 1.00" 1.30"	---- 1.37" 2.80"	1 1 1
ZAK41321	ZAK41322	2.75" 3.75"	2.75" 1.55"	1.00" .87"	.75" .75"	2.50" 1.18"	2.50" 3.50"	1 1
ZAK42491	ZAK42492	1.25"♦ 1.62"	---- 1.25"	.87" .87"	.75" .75"	1.00"♦ 1.00"	---- 1.37"	1 1

♦-IS DIAMETER SYMBOL.

B-4.2 INSULATION KIT

Every TPO412A ThermoStream[R] System, is supplied with an Insulation Kit (P/N ZAK 40480) to be used around the test site to protect the tester components from the temperature extremes and moisture. The kit consist of three (3) 12" X 12" silicon foam rubber sheets of various thicknesses (1 - 1/8", 1 - 1/4" & 1 - 1/2" thick) and a tube of silastic. This kit should be applied as outlined in Appendix C-2. When Conductive Shrouds are requested a conductive pad (12" X 12" X 1/8") is supplied for the test site.

APPENDIX B-5
REMOTE MODULE OPTION FOR TEMPERATURE SET SWITCH MODULE

B-5.1 INTRODUCTION

This option, shown in Figure B-5.1, is provided for operator convenience. It allows either the single TEMPERATURE SET switch module or the five TEMPERATURE SET switch module, depending on system configuration, to be located up to 12 feet away from the microprocessor controller by means of an optional ribbon cable. An enclosure suitable for table top use, is also provided to house the TEMPERATURE SET switch(s).

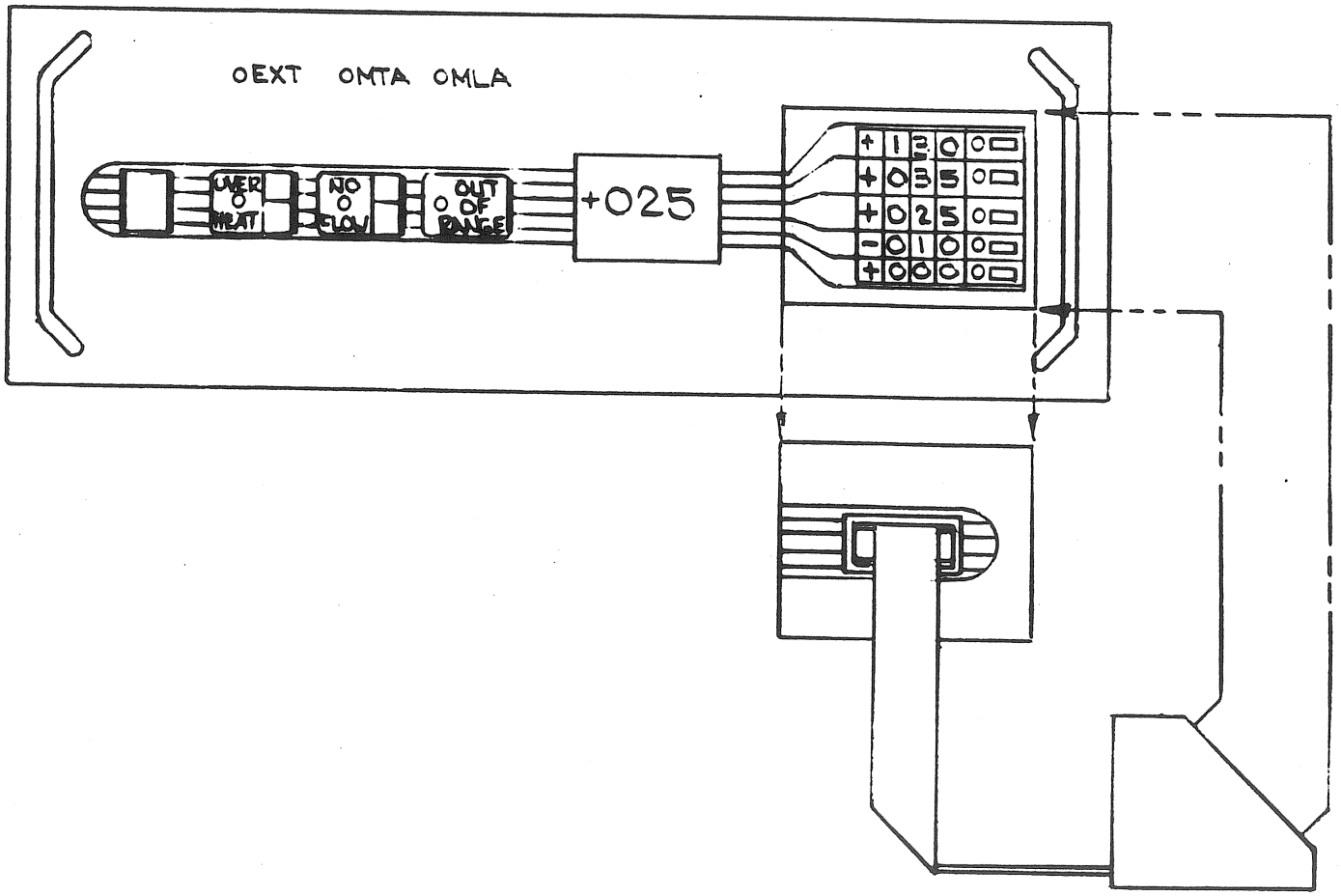

Figure B-5.1. Remote TEMPERATURE SET switch option.

B-5.2 INSTALLATION

To install this option simply;

1. Turn the system "OFF" following the shut down procedure outlined in Section 3-7 of the operating manual.
2. Turn the thumb screw securing the TEMPERATURE SET switch module assembly in the front panel counter clockwise.
3. Remove the TEMPERATURE SET switch module from the front panel.
4. When mounting the supplied blank panel and cable assembly into front panel cavity properly make cable connection.
5. Secure the panel in place using the thumb screw.
6. Insert the TEMPERATURE SET switch module into the table top enclosure.
7. Secure the TEMPERATURE SET switch module in place using the thumb screw.
8. Ensure all other system connections.
9. Turn the system "ON" by depressing the system POWER switch. The system is ready for normal operation.

APPENDIX B-6
BUCK BOOST TRANSFORMER OPTION

B-6.1 INTRODUCTION

A buck boost transformer is offered as an accessory option to the TP0412A ThermoStream® System. This accessory allows a user to condition (within reason) the available power to meet the power requirements of the TP0412A ThermoStream® System as specified in Section 1 of the manual.

The transformer is supplied (reference drawing D4058, next page) with a power cord and a receptacle. The power cord connects to the ac power source and the system power cord connects to the receptacle.

When ordering this accessory refer to the data plate located on the rear panels or the power cord male plug to determine system amperage requirements.

AMPERAGE REQUIREMENTS	TRANSFORMER PART #
30 amps.	ZAK 40580
20 amps.	ZAK 40584

REVISIONS				
ZONE	LTR	DESCRIPTION	DATE	APPROVED
	G	ECN 2984		
	H	ECN 4058H	10-18-89	

REV	ECN NO	DATE
C	2597	3-85
D	2625	2-85
F	2708	5-85
G	2984	3-86

SEE NOTE 1

VIEW C-C

SEE NOTE 1

VIEW B-B

KNOCKOUT "A" IS OPTIONAL BY MANUFACTURER. IF SUPPLIED DO NOT OPEN THESE KNOCKOUTS.

THIS HARDWARE SUPPLIED WITH BOX AND RECEPTACLE

REMOVE TRANS.COVER SCREW SO BOX WILL FIT FLUSH

SUPPLIED WITH FITTINGS

8'

INCLUDES HARDWARE

SUPPLIED WITH TRANSFORMER

AFTER BOX IS INSTALLED USE THIS HOLE AS PILOT AND DRILL INTO SIDE OF TRANSFORMER BOX; THEN INSTALL #8 HARDWARE

USE THIS KNOCKOUT AND INSTALL AS SHOWN ABOVE

VIEW A-A

CONNECTIONS
(FOR APPROX 14 VOLT BOOST)

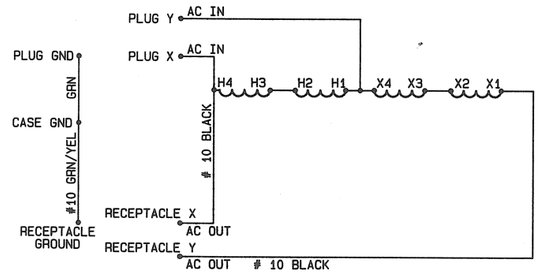

USE ITEM 10 FOR CASE GNDS
USE ITEMS 8 & 15 FOR CONNECTIONS
X1- AC OUT
X2- X3
X4- HI AC IN
H4- AC IN- AC OUT
USE ITEMS 9 & 15 FOR CONNECTIONS
H2-H3

NOTES :
1. FOR ZAK40580 AND ZAK40584 REMOVE ENTIRE KNOCKOUT ON BACK VIEW ONLY; ON FRONT SIDE REMOVE SMALLER CENTER KNOCKOUT.
FOR ZAK40582 REMOVE SMALLER CENTER KNOCKOUT ON BOTH FRONT & BACK.

-0 ONLY			
APPENDIX B-6	LN51470	TP041R	
TP41R LISTING			
NEXT ASSY	USED ON	SYSTEM	
APPLICATION			

UNLESS OTHERWISE SPECIFIED DIMENSIONS ARE IN INCHES
TOLERANCES ARE:
FRACTIONS ± 1/64 DECIMALS .XX ± .01 .XXX ± .005 ANGLES ± 30'
MATERIAL
FINISH
DO NOT SCALE DRAWING

TEMP. STOCK NO.	NOMENCLATURE OR DESCRIPTION	MFG. PART NO.	ITEM
	PARTS LIST		

CONTRACT NO.

TEMPTRONIC CORP.

APPROVALS	DATE
DRAWN B.DELPRETE	12-19-84
CHECKED	
ENG JIM CROZER	1-3-85

BUCK & BOOST TRANSFORMER
(APPENDIX B-6)

UNLESS OTHERWISE SPECIFIED RESISTANCE VALUES ARE IN OHMS ± % WATT
CAPACITANCE VALUES ARE IN ± % VOLTS

SIZE	CODE IDENT NO.	DRAWING NO.	REV
D		4058	H

SCALE 1:1 SHEET 1 OF 1

FOTOBEAM/BROOKSIDE 0228-D

APPENDIX B-7
5 TEMPERATURE SET SWITCH OPTION

B-7.1 INTRODUCTION

This option, shown in Figure B-7.1, replaces the single TEMPERATURE SET switch located on the microprocessor controller front panel of the TP0412A ThermoStream System.

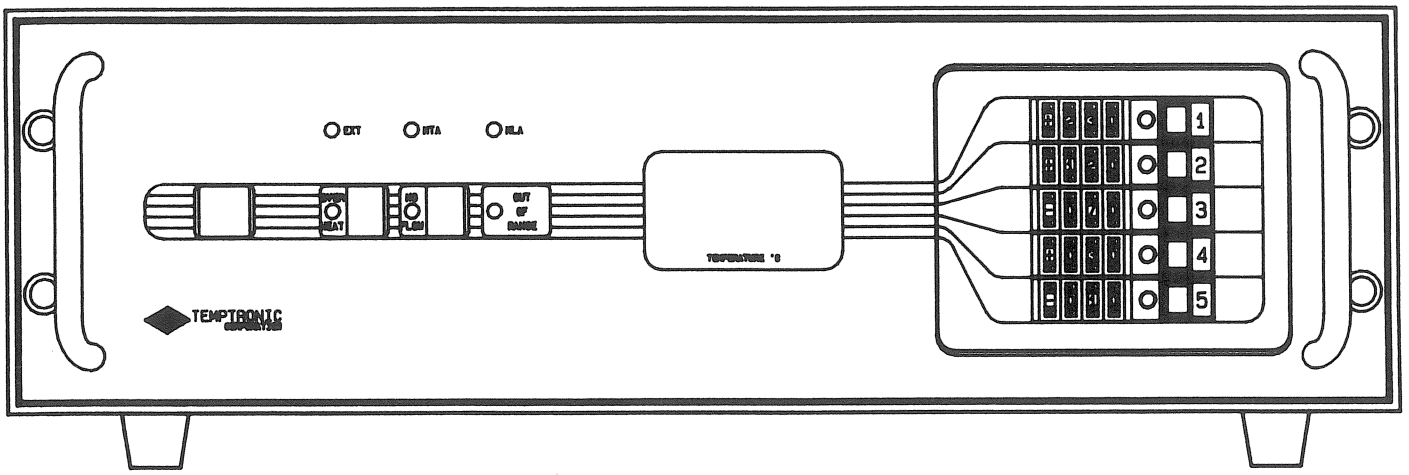

Figure B-7.1. 5 TEMPERATURE SET switch option.

This is a self-contained module consisting of 5 TEMPERATURE SET switches, corresponding select switches, and AT TEMP indicators. The purpose of this option, is to allow 5 temperatures to be preset at the start of a test sequence enabling rapid switching from one test temperature to another, without the delay necessary to reset the pushbutton settings.

During Start-Up and when RESET is pressed switch #3 is selected. Switch #3 must be used when initiating either the -980 or -990 codes.

B-7.2 INSTALLATION

To install this option simply;

1. Turn the thumb screw securing the single TEMPERATURE SET switch module assembly in the front panel counter clockwise.
2. Remove the single TEMPERATURE SET switch module from the front panel.
3. Insert the 5 TEMPERATURE SET switch module in place.
4. Secure the 5 TEMPERATURE SET switch module in place using the thumb screw.

B-7.3 INTERNAL DIAGNOSTICS

Refer to the -992 Routine outlined in Section 6-3.3 if a problem with either a switch of indicator is suspected.

APPENDIX B-8
TP0412 IEEE-488 OPTION

B-8.1 INTRODUCTION

The Temptronic IEEE-488 interface option, is available as an I/O port and address switch mounted on the microprocessor temperature controller rear panel, with a special software package supplied in a PROM chip.

The TP0412 IEEE-488 interface was developed to be consistant with the IEEE Standard 488-1978 specifications, see Section B-8.4. For a detailed explanation of the IEEE-488 functions, it is suggested that a copy of Hewlett-Packard's publication entitled "TUTORIAL DESCRIPTION OF THE HEWLETT-PACKARD INTERFACE BUS" revision January 1983, be obtained.

Initially, it is recommended that the TP0412 system be operated in the manual/local mode (from the system front panel), to become familiar with system operation prior to attempting external means of control. This will also verify normal system operation. Refer to Section 3 of the system manual for these procedures.

Since the Temptronic system is only a "Talker" or a "Listener", a bus controller is required to complete the interface system. A bus controller is a device capable of specifying the "Talkers" and "Listeners" for an information transfer, itself included.

When the TP0412 system is being operated in the calibration mode, see Section 5-3.2.2 (-990 routine) in the system manual, it will not respond to the bus controller commands.

Should the system be suspected of malfunctioning while under external control, it is suggested that it be operated in local mode to isolate the problem. To return to local control simply depress the RESET switch.

B-8.2 BUS INTERFACING

Figure B-8.1 shows the TP0412 IEEE-488 I/O and the address switch. The following rules apply when interfacing to the bus:

1. Total number of devices on any given bus should not exceed 15.
2. Total cable length should not exceed 2 meters times the number of devices on the bus or 20 meters maximum.
3. Make cable connections when bus is inactive (non-functioning).
4. Do not connect more than 2 cables to the TP0412 IEEE-488 I/O.
5. Tighten connector mounting screws only finger tight.

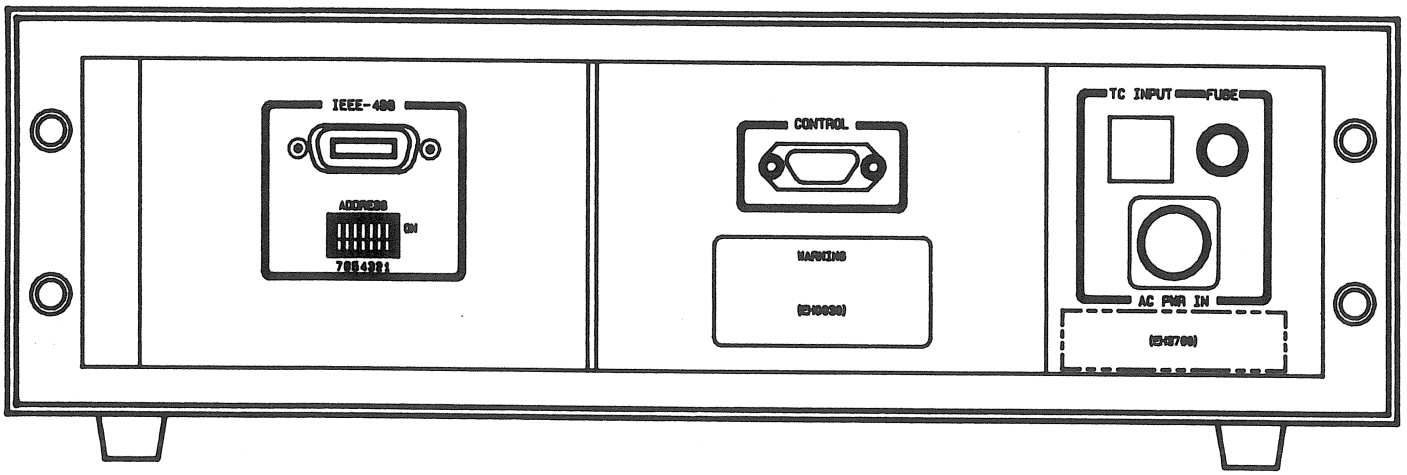

Figure B-8.1. TP0412 IEEE-488 I/O.

B-8.3 OPERATION UNDER IEEE-488

Under IEEE-488 operation/control, the following functions are possible. It should be noted that items 6 through 8 require certain options be installed to be effective.

1. Temperature setting
2. Time at temperature (soak time)
3. Specifying upper and lower temperature limits within the factory set temperature limits of the system
4. Switching air flow on or off (The rate of air flow is manually adjusted, see Section 3 of the system manual.)
5. Select FLOW modes (Automatic, Transition only, Test only or both Transition and Test)
6. Select control of air or device temperature [DUT option]
7. Select 1 of 4 different preset rates of air temperature change (see pages 3-26 and 3-27 of the system manual) [DUT option]
8. Stand up or down [stand option]

B-8.3.1 Address Switch Setting

Each device on a bus must have its own unique address. The first five (numbers 1-5) toggles of the rear panel DIP switch set the TP0412 address. Each switch corresponds to a binary value; the sum of the binary value(s) of all the "on" (active) switches is the address.

SWITCH NUMBER	BINARY VALUE
1	1
2	2
3	4
4	8
5	16

A switch is "on" (logical 1) when the top of the switch is depressed and its binary value contributes to the address. Diagnostic routine -997 is provided in the software to verify the switches, see Section 6-3.9.

Note: The address switch is read during the power up sequence. If it is necessary to change the address after power up simply set the switch to the new address and depress the RESET switch (Flow will be stopped when RESET is depressed).

B-8.3.2 Start-Up Under IEEE

Before powering the system the following should be performed:

1. Set the address switch to the desired address.
2. Orient the controller such that the EXT, MTA and MLA indicators on the front are visible to the operator.
3. Check the MODE switch position and set, if necessary to the desired position (Heat/Cool or Heat Only). (Switch is located behind the hinged panel in the power controller.)

Depress the front panel power switch to power on the TP0412. During the power on sequence IEEE, communication with the microprocessor is possible. However, all TP0412 control functions are disabled until the sequence is completed as signified by the "READY" indicator, see Section 3 of the system manual. The power on sequence lasts approximately 10 minutes. After receiving the "READY" indication, the TP0412 will respond functionally to the bus controller commands.

When the TP0412 is under the control of the bus controller, the EXT indicator will be lit and periodically the MTA (my talk address) and MLA (my listen address) indicators will light indicating that the system has been addressed to send ("TALK") or receive ("LISTEN").

B-8.3.3 Command Messages

The command messages are segregated into two (2) groups, those for exercising functional control and those for causing the TP0412 to send information. The syntax for receive functional commands is comprised of two (2) letters followed by an option or numeric argument. Commands which cause the TP0412 to send data, are simply two (2) alpha characters. The TP0412 will only accept the range of numbers defined and system performance is undefined if syntax is violated.

The Receive message commands prompt the TP0412 to "Listen" and establish internal conditions, accept new control parameters (set temperature, upper/lower limits, etc.) and in general are the functional control group. A listing of these commands is in Section B-8.4.

The send messages cause the TP0412 to "Talk" sending specific requested data to the bus controller. A listing of these commands is in Section B-8.4.

B-8.3.3.1 Setting Temperature, Stand and Flow Control

If the desired interface has been established, it should now be possible to control the TP0412 from the bus.

The following examples will first set a positive temperature, then a negative temperature. For the system to achieve a negative temperature, the MODE switch must be in the Heat/Cool position, verify at this time. If the system has been operating in the Heat Only mode, a "WAIT" indication will be observed when the switch position is changed then after a 10 minute time delay, a "READY" indication will be given.

1) Output the following: "RS70RD0RW1"

RS70 (Receive Set Temperature 70) Note: No plus (+) sign or leading zeros (0).

RD0 (Receive stanD 0 [0=down]) Note: It is prudent to place the head in the down position when not at ambient temperature. A surface capable of withstanding the entire temperature range should be used to stop the head.

RW1 (Receive floW 1 [1=auto]) Note: Turns air flow on in auto mode which uses first the transition flow setting until the set temperature (within ±2°C) is attained then switches to the test flow setting.

2) After the TP0412 has reached and is controlling at 70°C output the following: "RS-40RD0RW1"

RS-40 (Receive Set Temperature -40) Note: Negative (-) sign required and no leading zeros (0).

RD0 (Receive stanD 0 [0=down]) Note: It is prudent to place the head in the down position when not at ambient temperature. A surface capable of withstanding the entire temperature range should be used to stop the head.

RW1 (Receive floW 1 (1=auto) Note: Puts air flow control in auto mode using first, the transition flow setting then the test flow setting after reaching AT TEMP (±2°C of set temperature).

Note: Repeating condition commands (flow, stand, etc.) is preferred practice in process environments. The TP0412 will interpret redundent commands unambiguously.

B-8.3.3.2 Example for Requesting Information

A typical request is to ask for the current temperature.

Simply output: "ST"

ST (Send current Temperature) Note: The system responds by sending a variable character string consisting of the current celcius (°C) temperature with its corresponding sign (±) as sensed by the control thermocouple.

B-8.3.3.3 Service Requests

Due to the complexity of handling interrupts, it is recommended that service requests (SRQs), be explored only when considerable system confidence has been established.

B-8.3.3.4 HP-85 Examples

The following document (LMS1630) is provided here to show examples of performing single commands using the HP-85.

IEEE NOTES FOR OPERATING THE TP0412A WITH AN HP-85

1. It is possible to operate the TP0412A SYSTEM with the HP-85 providing the HP-85 is configured with an IEEE-488 interface and the IEEE-488 option is installed in the TP0412A SYSTEM.

2. The commands may be entered as a series of single commands or as a string. The following shows how single commands are input.

   - OUTPUT 70n;"RS25"<END LINE>

     OUTPUT 70n; This is the required format for the HP-85, where n is whatever the TP0412A address switch setting is (ie. OUTPUT 709; indicates the address switch is set to 9, likewise OUTPUT 711; indicates the address switch is set to 11).

     "RS25" This is the message syntax for Receive Set temperature 25(^{0}C)

     The <END LINE> is always required.

   - OUTPUT 70n;"RW0"<END LINE>

     OUTPUT 70n; This is as before.

     "RW0" This is the message syntax for Receive floW off.

   - OUTPUT 70n;"RD1"<END LINE>

     OUTPUT 70n; This is as before.

     "RD1" This is the message syntax for Receive stanD up.

3. The following shows how the commands may be combined in a string.

   - OUTPUT 70n;"RS75RD0RW1"<END LINE>

     OUTPUT 70n; This is as before.

     "RS75....." This is the message syntax for Receive Set temperature 75(^{0}C)

     "....RD0..." This is the message syntax for Receive stanD down.

     ".....RW1" This is the message syntax for Receive floW on.

REFER TO PAGE B-8.15 FOR A LISTING OF THE RECEIVE ("LISTEN") COMMANDS RECOGNIZED BY THE TP0412A SYSTEM.

4. To display information (for example the current temperature) on the screen do the following:

- OUTPUT 70n;"ST"<END LINE>
  ENTER 70n;A$<END LINE>
  DISP A$<END LINE>
  _____ (the temperature would appear on the screen at this point)

  OUTPUT 70n; This is as before.

  "ST" This is the message syntax for Send current Temperature. At this point the TP0412A puts the current temperature into the output buffer.

  ENTER 70n;A$ This has the HP-85 read the TP0412A output buffer and store the information in a register (by replacing A$ with a keyboard character such as T it is possible to designate the register where the information is to be stored).

  DISP A$ This has the HP-85 display what is stored in register A$.

5. To print information (for example the current temperature) do the following:

- OUTPUT 70n;"ST"<END LINE>
  ENTER 70n;A$<END LINE>
  PRINT A$<END LINE>
  _____ (the temperature will print at this point)

  OUTPUT 70n; This is as before.

  "ST" This is as before.

  ENTER 70n;A$ This is as before.

  PRINT A$ This has the HP-85 print what is stored in register A$.

REFER TO PAGE B-8.16 FOR A LISTING OF THE SEND ("TALK") COMMANDS RECOGNIZED BY THE TP0412A SYSTEM.

6. When in LOCAL mode and wanting to go to REMOTE mode one of two methods is acceptable;

- type REMOTE 70n<END LINE> The REMOTE lamp turns on and the system will respond to commands within the Receive and Send Groups.

OR

- Send a recognized command such as OUTPUT 70n;"RSnnn"<END LINE>

7. When in REMOTE mode and wanting to return to LOCAL mode one of two methods is acceptable;

   - Type LOCAL 70n<END LINE> The REMOTE lamp goes out and the system will control at the last SET POINT entered.

   OR

   - Depress <RESET>

   NOTE: When in REMOTE and an OVER HEAT condition is experienced it is necessary to depress the <RESET> twice. Once to return to LOCAL and secondly to clear the condition provided the fault has been corrected.

8. S = SPOLL (70n)<END LINE>
   DISP S<END LINE>
   _____ (the status byte of polled address appears after DISP S<END LINE>) Refer to Appendix B-8 in manual for Status Byte information.

   If the answer was 69 for example;

   64 - this address generated SRQ
   4 - Not Busy
   1 - At Temperature
   69

SAMPLE PROGRAMS USING HP-85 INTERFACED TO TEMPTRONIC TP0412A THERMOSTREAM[R] SYSTEM

NOTE: TP0412A Address was set to 9 for the following examples.

EXAMPLE 1

Displaying Temperature

```
  3 OUTPUT 709;"RS10"
 10 OUTPUT 709;"ST"
 20 ENTER 709;A$
 30 DISP A$
 35 FOR I = 1 TO 100
 36 NEXT I
 38 GOTO 10
 40 END
```

EXAMPLE 2

Printing Temperature
(Airstream Temperature)

```
  3 OUTPUT 709;"RS90"
 10 OUTPUT 709;"ST"
 20 ENTER 709;A$
 30 PRINT A$
 35 FOR I = 1 TO 100
 36 NEXT I
 38 GOTO 10
 40 END
```

EXAMPLE 3

Printing Temperature
(Device Temperature;
DUT Option Installed)

```
  3 OUTPUT 709;"RS-25"
 10 OUTPUT 709;"SV"
 20 ENTER 709;A$
 30 PRINT A$
 35 FOR I = 0 TO -100
 36 NEXT I
 38 GOTO 10
 40 END
```

REFERENCES

"TUTORIAL DESCRIPTION OF THE HEWLETT-PACKARD INTERFACE BUS"
Copyright Hewlet-Packard Company 1980, November 1980, Rev. January 1983

"COMPUTER CONTROLLED TESTING AND INSTRUMENTATION", An Introduction to the IEC-625: IEEE-488 Bus, Martin Colloms B.Sc.(Hons.), C.Eng., M.I.E.E., Copyright 1983, Pentech Press, London: Plymouth, published 1983, International Standard Book Number (ISBN) 0-7273-0310-4

"IEEE STANDARD DIGITAL INTERFACE FOR PROGRAMMABLE INSTRUMENTATION", IEEE RECOMMENDED PRACTICE FOR CODE AND FORMAT CONVENTIONS FOR USE WITH ANSI/IEEE STD 488-1978, Introduction by Donald C. Loughry, Copyright 1983, The Institute of Electrical and Electronics Engineers, Inc., ISBN 471-80786-9, Library of Congress Number 83-83197

B-8.4 SPECIFICATION

The following is a reproduction of the preliminary specification for the Temptronic Corporation TP0412A IEEE-488 function.

The following is a listing of the IEEE function subsets to be supported.

SH1: Complete Source Handshake Interface Function.

AH1: Complete Acceptor Handshake Interface Function.

T6: A subset of the Talker Functions which includes Basic Talker, Serial Poll and Unaddress If MLA.

TE0: The extended talker functions are not supported.

L4: A subset of the Listener Functions which includes Basic Listener and Unaddress If MTA.

LE0: The extended listener functions are not supported.

SR1: Complete Service Request Interface Capability.

RL1: Complete Remote Local Function Capability.

PP0: No Parallel Poll capability.

DC1: Complete Device Clear Function Capability (the device clear state for the Temptronic device is the power up state).

DT0: No Device Trigger Capability.

C0: No controller function.

Device Clear: Clears Over Heat, Flow Error, any pending IEEE-488 message and turns off flow

These function subsets fully describe the interaction of the instrument with the bus. They do not define the syntax of transmitted messages the way the instrument generates service requests and responds to serial polls. These areas which are of concern to the user in terms of writing Temptronic Device dependent software, are defined as follows.

Service Request Function (SRQ): Temptronic device has the capability of requesting service by the bus controller. Any one or combination of events can cause an SRQ. The bus controller typically, then conducts a Serial Poll under software control to discover which instrument on the bus requested service and the reason for the request. A single byte of information is allowed for this response.

The following conditions set the associated bit in the status byte which is returned in response to a serial poll. (1 if true; 0 if false)

STATUS BYTE

BIT	CONDITION
0	AT TEMP
1	Not AT TEMP
2	OUT OF RANGE has occured
3	Flow error has occured
4	Overheat has occured
5	Message not executed (message not understood)
6	RSV (indicates this device generated SRQ, see below)
7	Reset has occured (either Front Panel or Power on)

If one or more of the bits 0 through 7, excluding the 6 bit, of the status byte makes a transition from 0 to 1 and the corresponding bit in the interrupt mask is also 1, then bit 6 of the status byte will go to 1 generating an SRQ. The SRQ will remain pending until a serial poll is performed which will clear bit 6. The status byte will not change while an SRQ is pending.

At Power on, bits 0 to 5 of the interrupt mask are set to 0. Bit 7 is set to 1 if rear panel switch #6 is set to 1. SELECTED DEVICE CLEAR (SDC) or DEVICE CLEAR (DCL) clears all bits of the interrupt mask and the status byte. Front panel RESET clears bits 0 to 5 of the interrupt mask and leaves bit 7 unchanged.

Receive Group: Messages sent to the Temptronic device. This is the function and control group.

Message Syntax: Two letters and an optional number. Examples below;

RSnnnn....Receive Set temperature (ignored in local)
RUnnnn....Receive Upper limit
RLnnnn....Receive Lower limit
RMn.......Receive Mask (SRQ mask byte)
RDn.......Receive stanD (n=0 down, n=1 up)
RWn.......Receive floW (0=off, 1=auto)
RKnnn.....Receive soaK (0-999 seconds)
RCn.......Receive Control (0=air, 1=device [DUT option])
RYn.......Receive device tYpe (n=0-3 [DUT option])
ROn.......Receive air mOde where;

- n=0 - automatic switching from TRANSITION to TEST
- n=1 - TEST valve only
- n=2 - TRANSITION valve only
- n=3 - TRANSITION and TEST valves open (combined flow)

The number format for these messages (nnn above) would be plus sign and leading zeros optional; minus sign mandatory.

Messages should be terminated with a Line Feed or an END (Carriage Return is ignored).

Send Group: Messages which when received, cause the Temptronic device to transmit the desired information when next addressed to talk.

ST.....Send current Temperature
SV.....Send current deVice temperature
SS.....Send current Set temperature
SU.....Send Upper limit
SL.....Send Lower limit
SM.....Send SRQ Mask
SF.....Send condition Flags
SE.....Send Error conditions
SA.....Send Auxiliary flags
SO.....Send air mOde
SY.....Send device tYpe

Messages sent by the Temptronic device would have the following formats:

Temperature Information; numeric digits, minus (-) sign if required, no leading zeros (eg; "25", "-10", "125", etc.) followed by a Carriage Return, Line Feed (with END asserted during Line Feed).

SRQ Mask; a decimal number between 0 and 255 sent as one byte (bit 6 is ignored when received and is always a "0" when sent) followed by a Carriage Return, Line Feed (with END asserted during Line Feed).

Condition Flags; a decimal number between 0 and 255 sent as one byte with the following format-

Bit 0.....at temp (1=at temp)
Bit 1.....out of range (1=out of range)
Bit 2.....inhibit heat power (1=power inhibited)
Bit 3.....remote (1=remote, 0=local)
Bit 4.....lockout (1=front panel locked out if remote)
Bit 5.....error condition (any 1 of the error conditions)
Bit 6.....not assigned (=0)
Bit 7.....not assigned (=0)

Carriage Return, Line Feed (with END asserted during Line Feed).

Error Conditions; a decimal number between 0 and 255 sent as one byte with the following format-

Bit 0.....overheat error
Bit 1.....open loop error
Bit 2.....not assigned (=0)
Bit 3.....flow error
Bit 4.....not assigned (=0)
Bit 5.....not assigned (=0)
Bit 6.....not assigned (=0)
Bit 7.....not assigned (=0)

Carriage Return, Line Feed (with END asserted during Line Feed).

APPENDIX B-9
BCD OPTION

B-9.1 INTRODUCTION

This option enables the TP0412A ThermoStream® System to be interfaced with an external device using the BCD format. This capability is provided in a special software package supplied in a PROM chip. The Temptronic microprocessor controller responds to the following two (2) commands:

1. Set Temperature Input. Received in parallel from the BCD bus when a "Data Ready" is active. This line generates the same interrupt as does the IEEE-488 option.

2. Current Temperature Output. This value is inverted before being output on the bus only if the BCD "External Enable" line is active. It is output once every 400msec.. A "Data Ready" output line is toggled once every 200msec..

External Set Temperature Connection

The required external Set Temperature connection is made at the rear of the microprocessor controller with a 36-pin Cinch 57-30360 type plug or equivalent and a closure from pin 18 to pin 36. The input signal from the external element must be TTL/DTL compatible. The signal transmitted through the particular pin connections are given in Table B-9.1.

Table B-9.1. Interface connector pin assignments.
(All signals TTL "1" = TRUE)

Pin Number	Signal	Function
1	Temperature Out	1 (LSB)
2	Temperature Out	2
3	Temperature Out	4
4	Temperature Out	8
5	Temperature Out	10
6	Temperature Out	20
7	Temperature Out	40
8	Temperature Out	80
9	Temperature Out	100
10	Temperature Out	200
11	Temperature Out	400
12	Temperature Out	800 (MSD)
13	NC	
14	Temperature Out Polarity	"1" = (+)
15	Data Ready (Temperature Out) 10 hz square wave	
16	At Temperature	
17	NC	
18	Logic GND	
19	External Temperature Set	1 (LSB)
20	External Temperature Set	2
21	External Temperature Set	4
22	External Temperature Set	8
23	External Temperature Set	10
24	External Temperature Set	20
25	External Temperature Set	40
26	External Temperature Set	80
27	External Temperature Set	100
28	External Temperature Set	200
29	External Temperature Set	400
30	External Temperature Set	800
31	External Temperature Set Polarity	"1" = (+)
32	Overheat	
33	Data Ready (Strobe) External Temperature Set 10-us pulse required	
34	Out of Range (Temperature Set)	
35	NC	
36	External Enable Jumper between pins 18 and 36 or logical ground at pin 36 enables EXTERNAL CONTROL SELECT switch	

NOTE

Pins 1-17, 32, and 34 are output signals.

Pins 19-31 and 33 are input signals.

B-9.2 INTERNAL DIAGNOSTICS

Refer to the -998 routine outlined in Section 6-3.10.

APPENDIX B-10
TP0412A DUT CONTROL OPTION

B-10.1 INTRODUCTION

The Device Under Test (DUT) option, (see Figure B-10.1) as supplied is a complete assembly which easily attaches via two ribbon cables to the TP0412A controller PCB and accommodates the TEMPERATURE SET switch module.

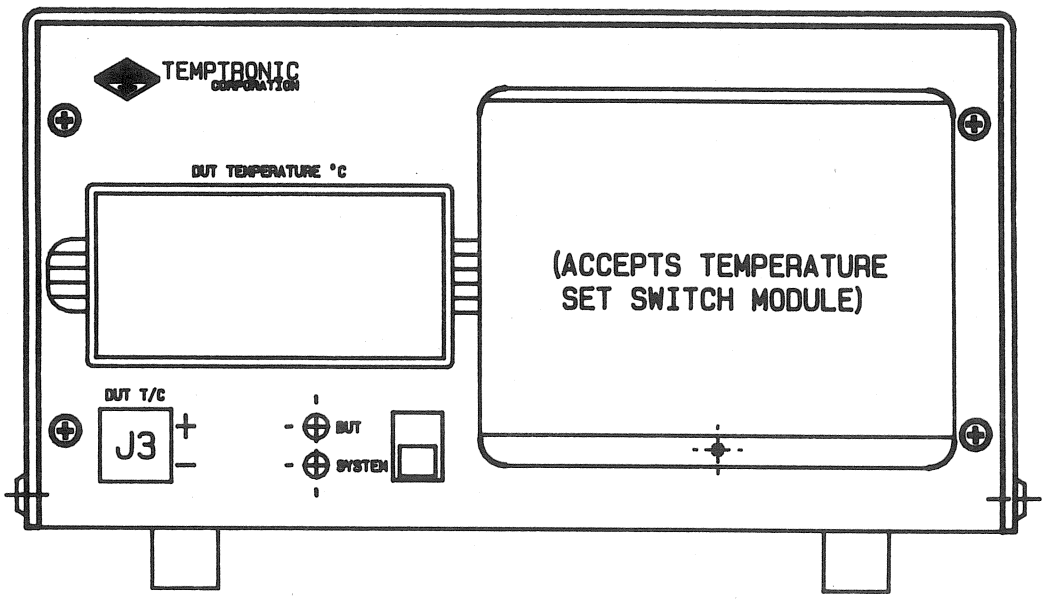

Figure B-10.1. DUT Option Console

The following reprint of an article published in the October 1984 issue of Evaluation Engineering magazine discusses the purpose and advantage to DUT control.

Improving Throughput and Accuracy When Testing Devices

by George Eager and Peter Selverstone, Temptronic Corp., 55 Chapel St., Newton, MA 02158 (617) 969-2501

High and low temperature testing of electronic components and modules at the tester socket rather than in a temperature chamber has become very common. This technique has spread from research and quality control labs to the production floor. Airstream systems, developed during the past decade, which direct temperature controlled air at the component in the test socket are typically employed for this function **(Figure 1)**.

Airstreams are designed to deliver temperature controlled air, but many users are concerned with the temperature induced in the DUT. The usual approach to thermal control in airstream systems is to sense the temperature of the air near, but not in contact with, the DUT. Methods which control the temperature of the DUT itself have the potential to improve both throughput and accuracy in many airstream applications.

This article compares the nature and effect of:

- Conventional Air Temperature Control—single sensor in airstream.
- Single Loop Device Temperature Control—single sensor in contact with the DUT.
- Dual Loop Device Temperature Control—both air and DUT temperatures controlled.

Conventional Air Temperature Control

In this case, the temperature sensor of the airstream system is usually located at the airstream outlet near the DUT **(Figure 2)**. Good airstream system performance requires rapid transition from one air temperature to another, minimal overshoot or undershoot when arriving at a temperature and very low deviation from steady setpoints. To achieve this performance of controlled damping and low steady state error, an airstream system requires a carefully designed control system.

The airstream temperature is controlled by regulating power applied to the heater **(Figure 3)**. The temperature controller used generally has a Proportional-Integral-Derivative (PID) algorithm optimized for minimum overshoot during setpoint transitions and closely regulated temperature while in steady state. The airstream temperature controller may be implemented with analog circuitry or a microprocessor. In either case, derivative (anticipatory) control action is used to ensure stability of the system and integral control optimizes steady state performance. The control time constants are usually preset by the airstream manufacturer so that the user is not required to perform the tedious process of controller optimization.

The rate at which the temperature of a DUT can be changed and the ultimate temperature achieved are functions of several variables including device size and material, the test fixture, air flow rate and air temperature. Because heat is transferred to and from a test specimen by forced air convection, device temperature will not necessarily be the same as air temperature. Even after long soak periods some temperature offset may exist.

Offset and device transition time can be reduced by maximizing the coupling of the airstream with the DUT. This can be accomplished by the use of a cap and enclosure to minimize the volume surrounding the specimen. Reduction of the enclosed volume increases the velocity of the air in contact with the DUT. High velocity increases heat

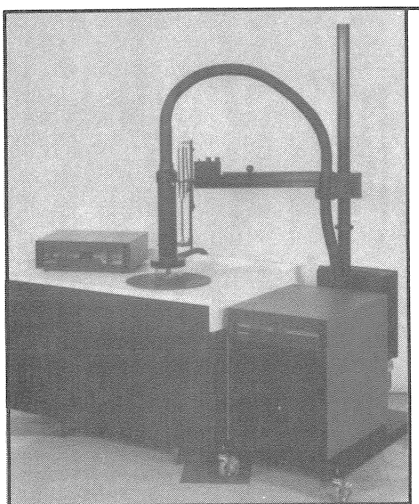

Figure 1. Temptronic TP0412A ThermoStream System.

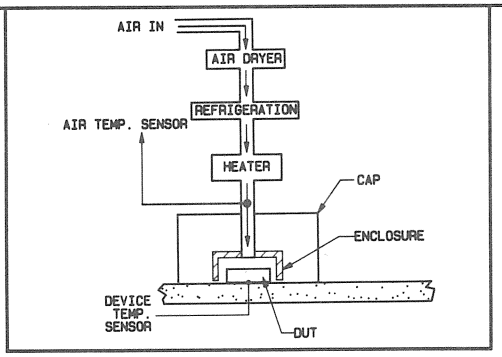

Figure 2. Airstream/DUT Block Diagram.

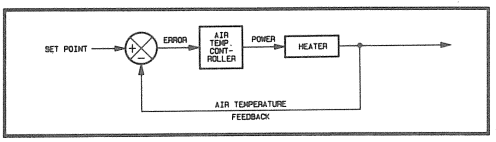

Figure 3. Airstream Control System.

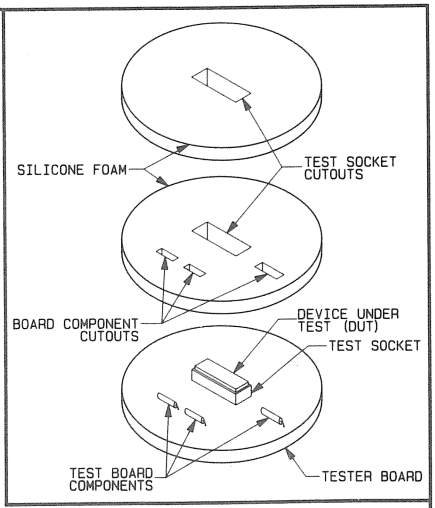

Figure 4. Thermal Insulation of Test Socket.

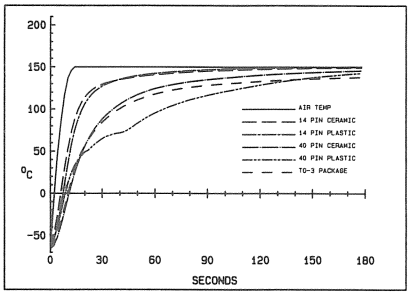

Figure 5. Temperature Transition −65°C to 150°C, Air Flow 8 scfm.

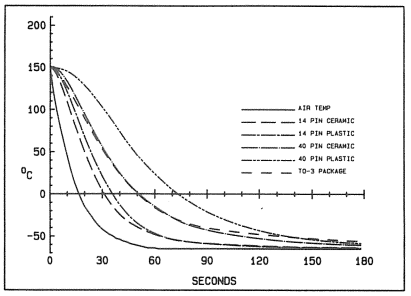

Figure 6. Temperature Transition 150°C to −65°C, Air Flow 8 scfm.

transfer. Insulation of DUT test sockets to minimize thermal leakage paths (**Figure 4**) also improves coupling.

The data presented in **Figure 5** and **Figure 6** illustrate typical airstream performance for the case when both the airstream and the DUT start from the same temperature and approach a set value. They were obtained using a cap, enclosure and insulated test sockets. The various devices exhibit different transition times and offsets from the airstream temperature. In general, small devices respond rapidly and have small offsets. Large devices respond more slowly and have larger offsets. The test fixture mass is significant in all cases as can be seen in the curve for a 40-pin plastic device (**Figure 5**) where discontinuities are due to heat transfer between the device and its test socket. Higher air flow would reduce both transition times and final offsets.

Accurate device temperature measurement and good coupling between airstream and device will provide adequate performance in many applications. It is important to remember, however, that the test device is outside the temperature control loop and its temperature may differ from that of the airstream. If precise device temperature control or minimum transition time is required, then automatic control of device temperature is desirable.

Closing the Loop Around the DUT

The significant advantages are:

- The device achieves a desired temperature faster since air temperature is allowed to exceed the device setpoint.
- If an appropriate control system is used, offset between setpoint and device temperature can be virtually eliminated during steady state.
- Devices undergoing tests in which varying amounts of power are dissipated can be held at a steady temperature since the airstream temperature is allowed to change.

The design of an airstream system to permit DUT temperature control with the temperature sensor in contact with the device presents a problem to manufacturers of airstream systems. The device and its fixturing must be included in the control loop. Since the time constants and heat transfer characteristics of the user's application cannot be known in advance, control stability and performance can be a problem. The design of a controller for device control consists of two parts. First, the configuration of the control must be decided upon and then the parameters of the controller must be optimized for the application.

Single Loop Device Temperature Control

One possible configuration is a single loop system with the DUT in the control loop. It is easy to modify an airstream system by substituting a temperature sensor which is in contact with the DUT for the sensor in the airstream.

For accurate measurement of device temperature, the DUT sensor must be shielded from high velocity air. If the sensor is mounted on top of the device in the airstream, its output will be some weighted average of device and air temperatures. The usual practice with integrated circuits is to center a thermocouple on the bottom of the surface of the package, the area which is generally closest to the circuit die.

The controller senses the device temperature and regulates the power to the heater to bring the DUT temperature to a setpoint. Optimization of the system is difficult since the thermal characteristics of the DUT and fixturing are significantly different from those of the heater/airstream system that the controller was designed to regulate. If the sensor is shielded from the airstream in order to accurately measure DUT temperature, the system is difficult to stabilize and extremely sensitive to DUT thermal characteristics. When the system is unstable, the air temperature oscillates and may swing between the system limits. This may stress or damage the DUT. Instability can be detected by using two temperature meters, one for air temperature and the other for device temperature.

Dual Loop Device Temperature Control

A better approach is a dual loop system. The dual loop configuration adds a second control loop around the air system (**Figure 7**). The device temperature error signal controls the temperature setpoint of the air system. The output of the airstream system is used to change the device temperature. In this configuration, modification of the airstream system is not necessary; it remains optimized for air temperature control. The outer loop can be optimized to control DUT temperature.

This allows the system to be used in a wide variety of applications with little readjustment of control parameters. With the airstream system intact, upper and lower air temperature limits can be set to protect devices from excessive temperature exposure under any conditions. Even if the device temperature sensor is improperly placed, creating an instability in the device control loop, the inner loop will control the air temperature. With the dual loop approach, the basic air system control is not modified and the airstream system is not exposed to unexpected open loop conditions which lead to uncontrolled temperature excursions.

To demonstrate the dual loop approach, a control system was imple-

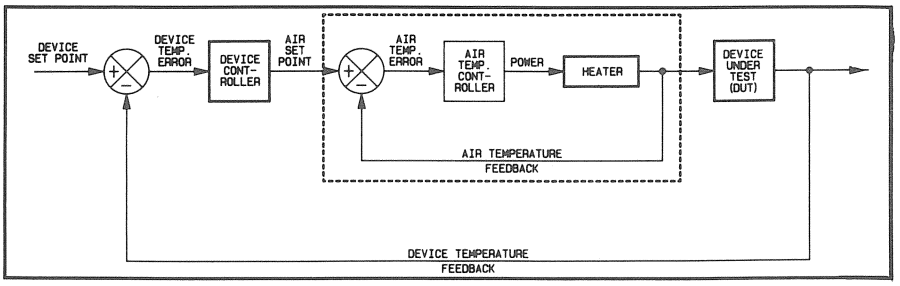

Figure 7. Dual Loop Device Control System.

mented with unmodified commercially available equipment. A Temptronic Corporation TP0412 ThermoStream System with IEEE 488 option (Figure 1) was used. This system is designed to deliver 2 to 10 scfm of air at temperatures ranging from −70° to +200°C. The IEEE 488 option allows an external controller to vary the air setpoint and to read both air temperature and system status. A thermocouple was used to measure the bottom temperature of the DUT. The controller for the outer loop was a Hewlett-Packard HP 85 Personal Computer with HPIB (IEEE 488). Device temperature was measured with a Hewlett-Packard Model 3421A Data Acquisition/Control Unit with Option 20 and HPIB. DUT temperature was measured by the 3421A Unit and transferred to the HP 85 over the HPIB.

The HP 85 calculated setpoints and transferred them to the TP0412 system via IEEE 488. The controller program for the HP 85 **(Figure 8)** implements the following control algorithm:

$$Asp = Dsp + K1\,e + K2 \int e\,dt$$

where:

Asp = Air setpoint
Dsp = Device setpoint
e = Error (Device setpoint − Device Temperature)
K1 = Proportional constant
K2 = Integral constant

Line numbers 530 and 532 of Figure 8 are limits on the air setpoint. These can be set to whatever values are necessary to protect the DUT. Lines 526 and 527 limit the value of the integral term of the control equation to ±10° to reduce the integration effect during transients. The integration will maintain a steady offset between air and device temperature of up to 10°. The control subroutine executes every two seconds.

Some results of a test on a 14-pin plastic package are shown in **Figure 9**. Initially, both the air and the device were at −65 degrees Celsius. The device setpoint was raised to +150°. The control program raised the air setpoint to the upper limit of 200°, the air temperature rose to 200° and then decreased as the device error decreased. At 90 seconds the device setpoint was changed to 25° and similar control action was observed. Referring to Figure 5 it can be seen that without a device control system a 14-pin plastic package took more than 100 seconds to approach within one degree of the 150° air temperature. In the dual loop setup it took only 50 seconds to come to temperature. Typical steady state accuracy of the test system was ±.4° Celsius. Device temperature overshoot was usually less than 2°. This system demonstrates the significant reduction in device temperature transition time that can be obtained by using a device control loop.

```
100 !       DEVICE TEMPERATURE CONTROLLER
110 !
120 K1=.5 @ K2=.5 !                    Control Constants
121 I=0 @ F=1
122 INPUT S !                           Get Device Setpoint
140 REMOTE 9 !                          Remote IEEE Bus
150 OUTPUT 901 ; "TEM3" !               Initialize Data Acq Sys
170 ON TIMER# 1,2000 GOSUB 500 !        Interrupt Every 2 Sec
180 !
200 IF F=1 THEN 200 !                   Wait Until Data Available
205 DISP D @ F=1 !                      Display Dev Temp
210 GOTO 200
400 !
500 !       INTERRUPT SERVICE ROUTINE
510 !
515 F=0
520 ENTER 901 ; D !                     Read Dev Temp
522 E=S-D !                             Calculate Error
523 P=K1*E !                            Proportional Term
524 I=I+K2*E !                          Integral Term Accumulates
526 IF I>10 THEN I=10 !                 Saturation Limits On I
527 IF I<-10 THEN I=-10
528 A=S+P+I !                           Calculate New Air Setpoint
530 IF A>200 THEN A=200 !               But Not Beyond Limits
532 IF A<-70 THEN A=-70
540 OUTPUT 902 ; "RS"; INT(A+.5) !      Send A To Airstream, Rounded
550 TRIGGER 901 !                       Trigger Next Reading
560 RETURN !                            From Interrupt
999 END
```

Figure 8. Dual Loop Control Program.

An optimized dual loop control system has been implemented in the Temptronic Corporation Device Under Test Control option for the TP0412 system. The TP0412 system microprocessor allows the use of a more sophisticated control algorithm than was presented above. It controls device temperature without an external computer and temperature measuring system. The option is a small remote console which includes device temperature indication, air or device control selection and either 1 or 5 setpoint selections. The console is designed to allow these controls to be conveniently located near the test socket. If desired, the option can be controlled and device temperature and status read by using the TP0412 IEEE 488 option.

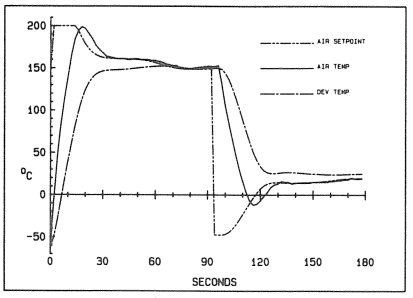

Figure 9. Thermal Step Response of the Dual Loop DUT Control System.

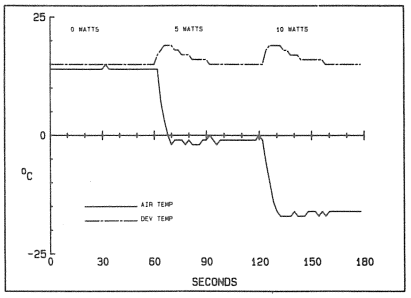

Figure 10. Device Controlled Power Dissipation Compensation.

Using Dual Loop Control for Compensating for Variable Power Dissipation

As an illustration of the utility of the DUT control option, a test was performed on a 5 volt regulator integrated circuit in a TO-3 package. The device, under DUT control by the TP0412 system, was held at +15°C in an air flow of 10 scfm (5 l/s) while the power dissipation of the device was changed from 0 watt during the first 60 seconds, to 5 watts during the second 60 seconds and to 10 watts during the final sixty seconds of the test.

Figure 10 shows how the air temperature responded to the step change in device dissipation maintaining the device at the 15°C setpoint. The device temperature was raised 4° by the change in power but was within 2° of setpoint after 18 seconds and restabilized at the setpoint in 30 seconds. Figures 5 and 6 show the TO-3 package to have the largest offset from air temperature of the devices tested. The device control system eliminates the offset even when the device is dissipating considerable power. The steady state accuracy of the DUT option is typically less than ±.2°C.

A dual loop device control system greatly enhances the ability of airstream systems to precisely control the temperature of devices under test and minimize transition times from one test temperature to another. If high throughput or accurate device temperature is required, this system provides the required performance. EE

GEORGE EAGER is a Senior Electronics Engineer at Temptronic Corp. where he is responsible for all electronic product development and has been with the company for 12 years.

PETER SELVERSTONE is a consultant specializing in microprocessor control of mechanical systems.

B-10.2 TEMPERATURE SENSORS

As illustrated in Appendix C-4 proper contact is essential to reliable temperature sensing. When the sensor is used in a control circuit, as in this case, the sensor must be properly constructed, positioned for maximum contact and isolated from other components to minimize response times.

Two (2) different ("spring", "disc") thermocouple assemblies are supplied, allowing the user to determine which is best for his application.

A representative performance curve is provided on page B-10.6 to illustrate the results using both type sensors with a TP0412A ThermoStream® system operating in the DUT mode. The response of the "disc" is more responsive than the "spring" and should be used if test speed and through-put are the most important needs. The "spring" type sensor is more rugged and if its response is adequate for the application, may be a better choice.

REPRESENTATIVE PERFORMANCE DATA

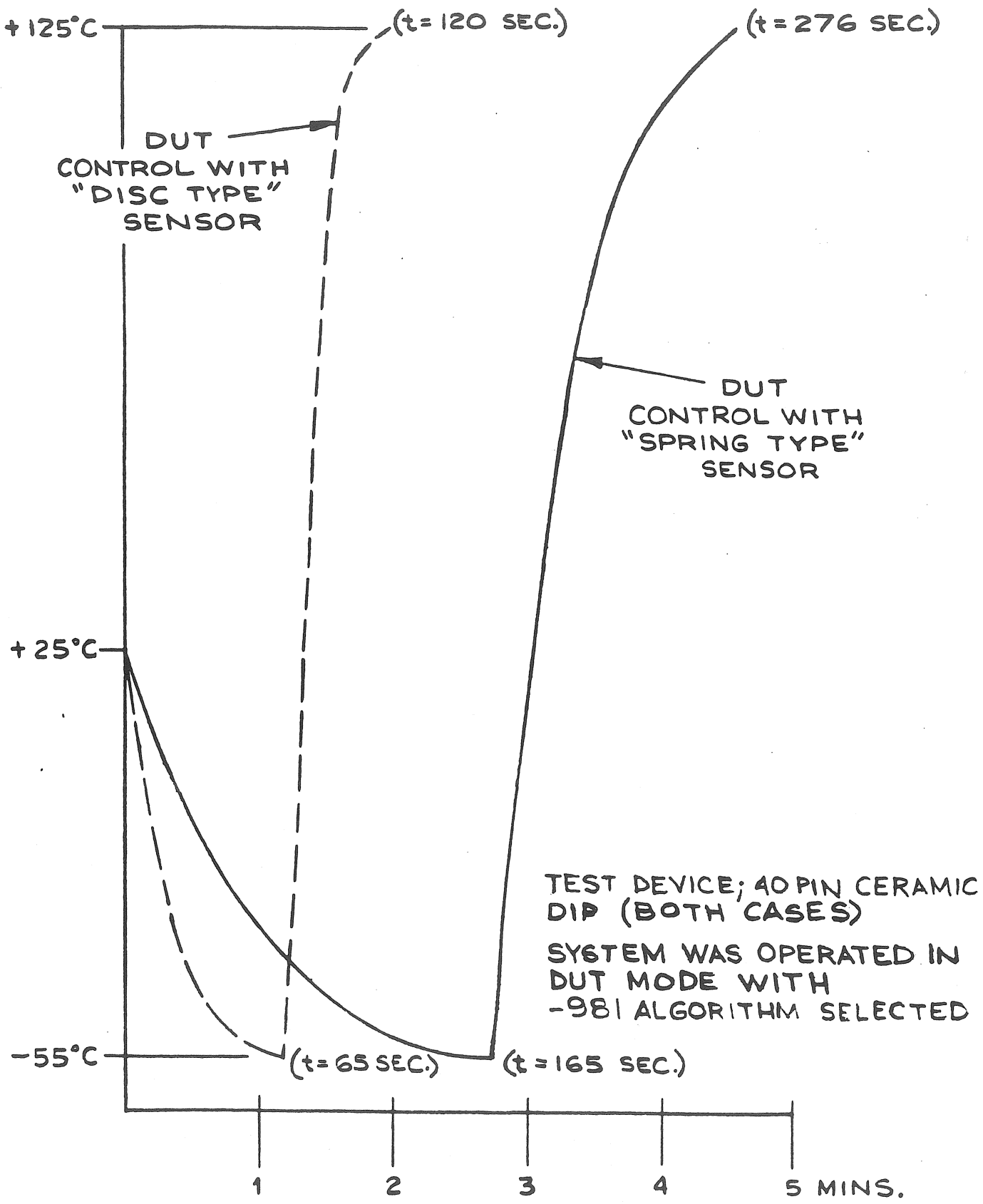

B-10.3 INSTALLATION

1. Remove the temperature controller from its cabinet and remove the top cover screen.

2. Referring to Figure B-10.2, disconnect the ribbon cable from PCB connector J2 and remove the TEMPERATURE SET SELECT switch and its short ribbon cable from the the controller front panel.

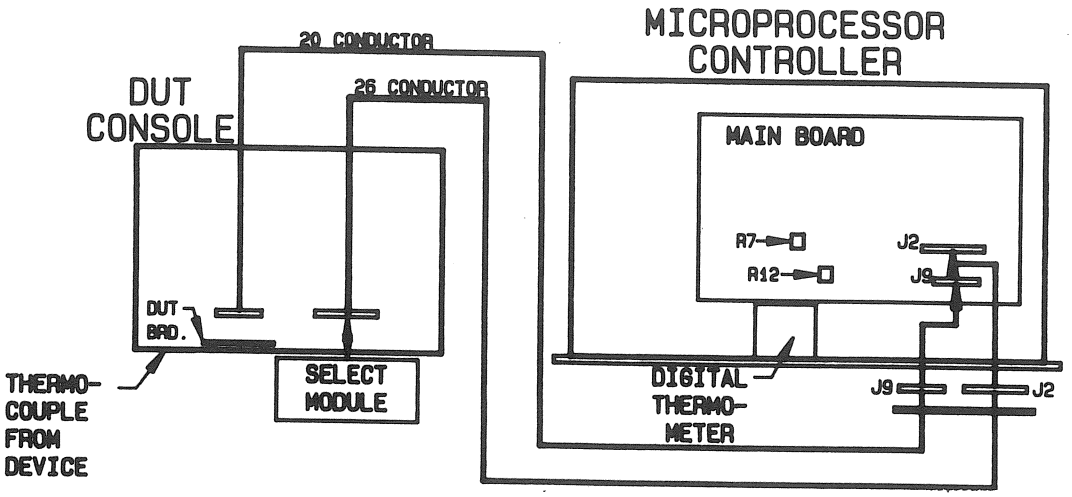

Figure B-10.2. DUT Console & Microprocessor Controller Interconnections.

3. Disconnect the short ribbon cable from the TEMPERATURE SET SELECT switch and store it for possible future use.

4. Thread both DUT CONTROL OPTION ribbon cable through the front panel opening and connect them to connectors J2 and J9 on the controller PCB. If present, make ground lead (2) connection to microprocessor chassis grounding stud.

5. Attach the front panel cable strain relief plate in the controller front panel.

6. Connect the 26 conductor ribbon cable inside the DUT OPTION CONSOLE to the TEMPERATURE SET SELECT switch and mount this switch module in the DUT CONSOLE front panel.

7. Refer to Section 5-3.4 for calibration instructions. If calibration is not necessary at this time replace the controller top cover screen and reinstall the controller in its cabinet.

8. If not already done prepare the test site as outlined in Section B-10.4.

B-10.4 FIXTURING (preparing the test site)

The following is offered as a guide to proper fixturing. If the supplied temperature sensors are to be used refer to the appropriate section (B-10.4.1 "spring", B-10.4.2 "disc") for installation instructions.

IMPORTANT: TIME/TEMPERATURE RESPONSE is dependent on the mass being heated or cooled, quality of sensor to DUT contact, materials of the fixture as well as interface of the TP0412 ThermoStream® System to the test fixture. Close attention to fixturing details will ensure best DUT performance.

1. All materials used in fixturing should be capable of withstanding the total system specified temperature range of -70°Celsius to +205°Celsius.

2. Proper socket and thermocouple assembly will allow only the thermocouple junction to contact the bottom center of the DUT to minimize heat sinking. The tested device body should not contact the socket body (see drawing B4714).

3. Use a small gauge (#26, #28 or #30 gauge) teflon or kapton coated copper-constantan (type T) thermocouple wire.

4. Make thermocouple junction as small as possible. Mount thermocouple to socket per concepts shown by drawings B4322 and B4714.

5. Use silicon rubber as an insulated base on which socket is to be mounted, see Figure B-10.3. Make base large enough to accommodate Thermal Cap for proper sealing. Reference Appendix C-2 of the manual.

6. Center and mount socket on silicon base.

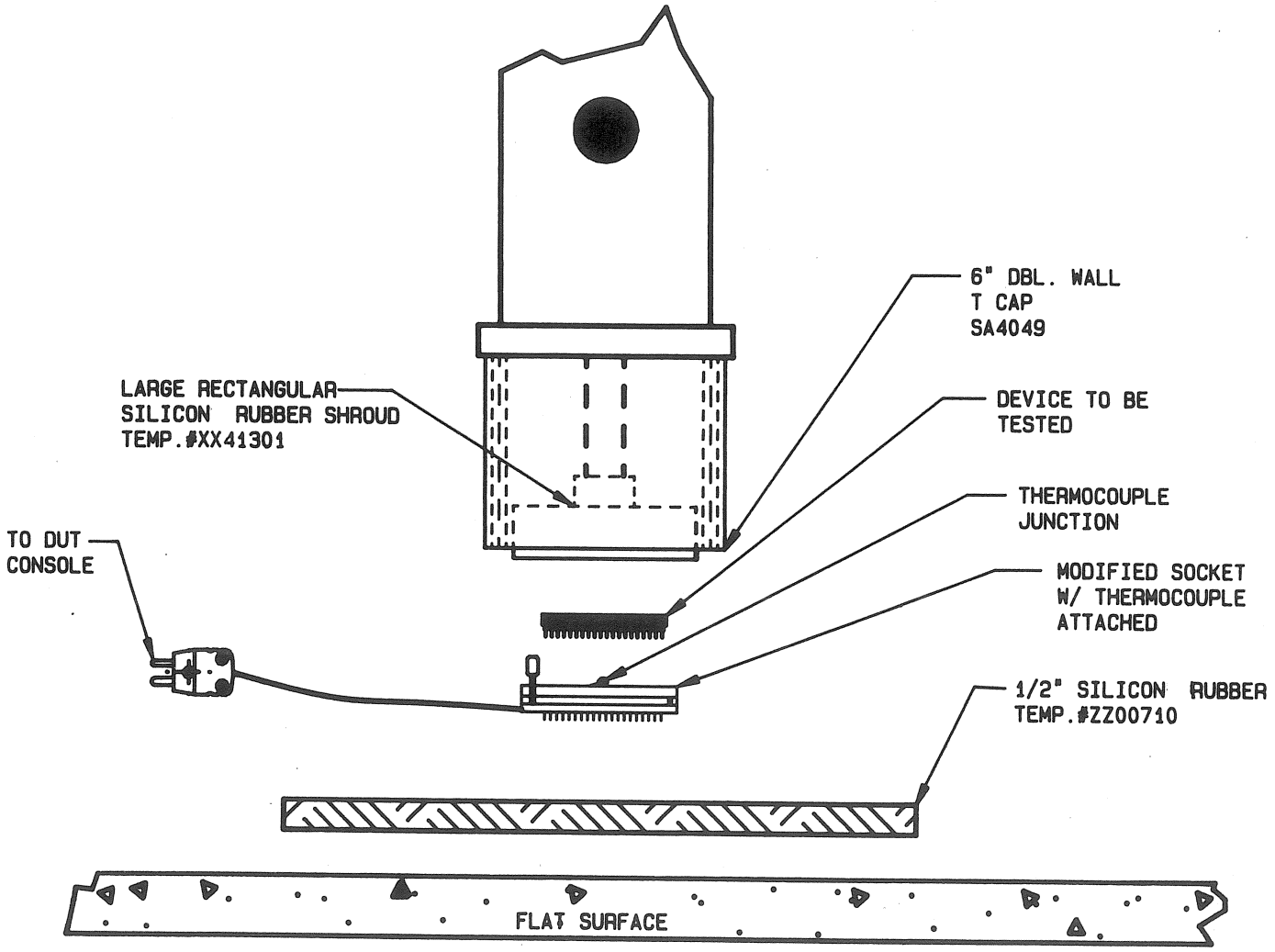

Figure B-10.3. DUT Test Fixture and Interface.

TEMPTRONIC APPLICATIONS personnel are available to assist with any specific or special fixturing inquiries.

REVISIONS				
ZONE	LTR	DESCRIPTION	DATE	APPROVED
	A	RELEASED	12-4-84	Jim C
	B	ECN# 2974	3/86	[illegible]

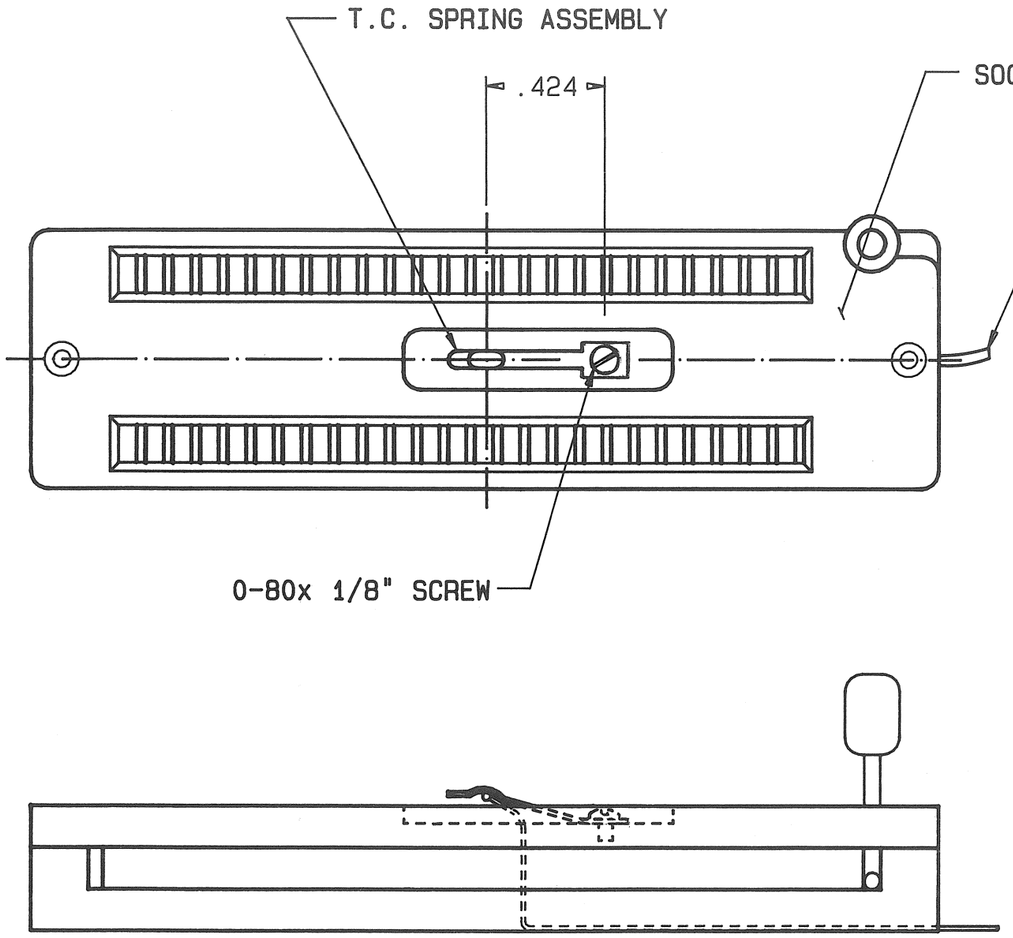

SOCKET MODIFICATION

1- MILL A .12" WIDE x .06" DP. SLOT IN SOCKET TO POSITION THERMOCOUPLE JUNCTION AT THE CENTER OF THE "DUT"

2- DRILL & TAP FOR THE #0-80 MNTG. SCREW TO SECURE THE THERMOCOUPLE SPRING ASSEMBLY IN PLACE.

3- OBSERVE THERMOCOUPLE POLARITY WHEN AND IF REMOVING THERMOCOUPLE CONNECTOR FOR PROPER RE-INSTALLATION.

4- CONVENIENTLY ROUTE THE THERMOCOUPLE WIRE FROM SOCKET. CARE SHOULD BE TAKEN TO PREVENT ANY UNDO STRESS. THE ILLUSTRATION INDICATES ONE POSSIBILTY.

5- MOUNT THERMOCOUPLE SPRING ASSEMBLY IN SLOT USING HARDWARE PROVIDED.

NEXT ASSY	USED ON	SYSTEM
Appendix B-10	LMB1190	TP0412A
ZAK 4327		TP0412

APPLICATION

UNLESS OTHERWISE SPECIFIED DIMENSIONS ARE IN INCHES TOLERANCES ARE:
FRACTIONS ± 1/64 DECIMALS .XX ± .015 .XXX ± .005 ANGLES ± 30'

MATERIAL: SEE P/L

FINISH

DO NOT SCALE DRAWING

CONTRACT NO.

APPROVALS	DATE
DRAWN LDR	12-3-84
CHECKED	
ENG Jim	12-4-84

UNLESS OTHERWISE SPECIFIED RESISTANCE VALUES ARE IN OHMS ± % WATT
CAPACITANCE VALUES ARE IN ± % VOLTS

TEMPTRONIC CORP.

TYPICAL TEST
SOCKET MODIFICATION
(SPRING TYPE)

SIZE	CODE IDENT NO.	DRAWING NO.	REV
B		4322	B

SCALE NA SHEET 1 OF 1

B-10.10

REVISIONS				
ZONE	LTR	DESCRIPTION	DATE	APPROVED
	A	RELEASED ECN 2976	3/86	MJP

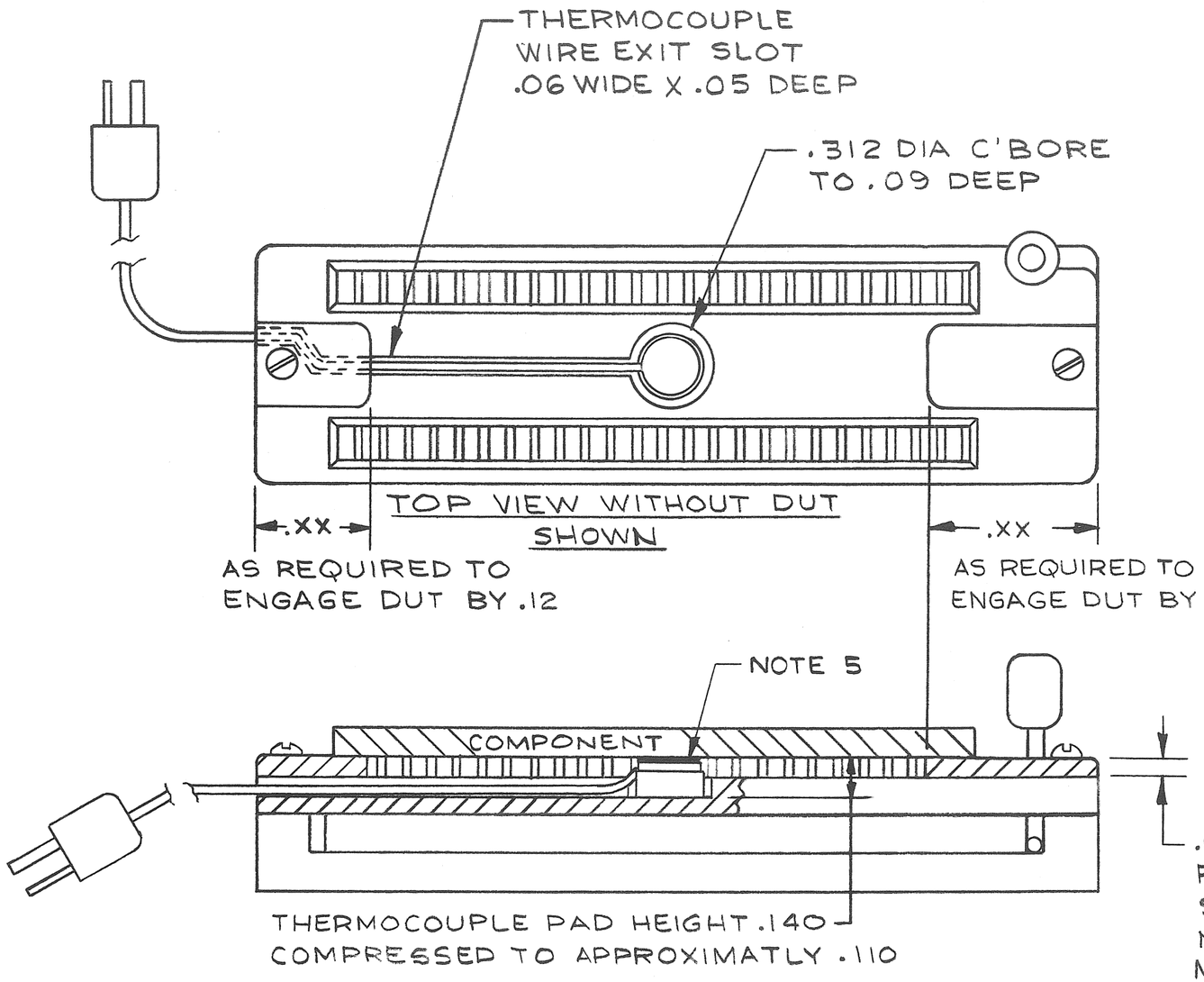

SOCKET MODIFICATION

1. OBSERVE THERMOCOUPLE POLARITY WHEN AND IF REMOVING PLUG FOR PROPER INSTALLATION.
2. CONVENIENTLY ROUTE THE THERMOCOUPLE WIRE FROM SOCKET. CARE SHOULD BE TAKEN TO PREVENT ANY STRESS IN THERMOCOUPLE WIRES.
3. DIMENSIONS SHOWN, SUGGEST A METHOD OF MODIFYING A TEXTOOL SOCKET #248-4775. IF OTHER SOCKETS ARE USED DIMENSIONS AND METHOD OF ATTACHING THERMOCOUPLE MAY REQUIRE MODIFICATION TO ACHIEVE .02 MIN. CLEARANCE DIMENSION SHOWN. WHILE APPROXIMATLY COMPRESSING DISC .03.
4. ANY ADHESIVES USED, SHOULD BE RATED TO WORK AT MAXIMUM TESTING TEMPERATURE.
5. A THIN LAYER OF THERMAL GREASE IS RECOMMENDED BETWEEN DISC AND COMPONENT.

LMS1170	DUT	TP0412A
NEXT ASSY	USED ON	SYSTEM
APPLICATION		

UNLESS OTHERWISE SPECIFIED DIMENSIONS ARE IN INCHES
TOLERANCES ARE:
FRACTIONS DECIMALS ANGLES
± 1/64 .XX ± .015 ± 30'
.XXX ± .005

MATERIAL —

FINISH —

DO NOT SCALE DRAWING

CONTRACT NO.

APPROVALS	DATE
DRAWN ESPINOLA	2-25-86
CHECKED MJP	3-4-86
ENG	

UNLESS OTHERWISE SPECIFIED RESISTANCE VALUES ARE IN OHMS ± % WATT
CAPACITANCE VALUES ARE IN ± % VOLTS

TEMPTRONIC CORP.

TYPICAL TEST SOCKET MODIFICATION (DISC TYPE)

SIZE	CODE IDENT NO.	DRAWING NO.	REV
B		4714	A

SCALE NA SHEET 1 OF 1

B-10.11

B-10.4.1 "Spring" Type

The "spring" sensor kit (P/N ZAK 4327) is supplied as a complete assembly. The user must modify the socket per drawing B4322 to accommodate this assembly. This assembly consists of a berillium spring and 18" of #30 gauge type "T" thermocouple wire with the proper male connector.

B-10.4.2 "Disc" Type

The "disc" sensor kit (P/N ZAK 4713) is supplied as a thermocouple assembly with 6 replacable silicon disks. Refer to drawing B4714 for proper installation of this sensor into a typical socket.

The use of a thermally conductive compound (very thin layer) may be added to the sensor contact surface to maximize thermal response.

B-10.5 DUT CONSOLE FEATURES

Item	Designation	Function	Explanation
1	TEMPERATURE meter	Indicates the temperature of the device under test in °C.	Provides a 3 digit and polarity display of the temperature with a 1°C. resolution and also supplies the displayed temperature to the temperature controller
2	MODE select switch	Is used to select temperature control of the air or the DUT	A momentary action push button switch.
3	SYSTEM TEMPERATURE control indicator	Indicates that the air temperature sensor is being brought to the temperature set set point.	When lighted the temperature controller is controlling the air temperature using a TC in the air stream.
4	DUT TEMPERATURE control indicator	Indicates that the DUT temperature sensor is being brought to the temperature set point.	When lighted the temperature controller is controlling the DUT temperature using a TC in good thermal contact with the bottom of the device under test. The TC must not be grounded.
5	THERMOCOUPLE connector	Provides the input connection for the temperature signal from the TC which senses the DUT temperature.	Allow the DUT TC to provide a temperature signal to the DUT TEMPERATURE METER and to the temperature controller.

B-10.6 DUT CALIBRATION

When the DUT option is supplied with the TP0412A ThermoStream^{R} system all necessary calibration has been performed. If this option was purchased separately, the temperature meter has already been calibrated per the procedure in Section 5-3.1 the user must however calibrate the microprocessor control circuit (Secion 5-3.4) during installation.

B-10.7 OPERATION

The DUT option permits an input to the microprocessor from an external sensor, a small gauge type "T" thermocouple, in contact with (usually the bottom) the DUT. This can be accomplished by applying the techniques outlined in Section B-10.4. This thermocouple is plugged into the receptacle provided on the DUT console front panel.

When using the DUT option, the operator selects either "SYSTEM" temperature control or "DUT" temperature control with the MODE switch on the DUT console front panel. If the IEEE-488 option is installed this selection can be done over the bus. When the "SYSTEM" indicator is lit the system is using the thermocouple in the air stream as the sense input and when the "DUT" indicator is lit the thermocouple in contact with the device is the sense input. When in DUT mode the microprocessor still monitors the supplied air temperature to ensure it is not beyond either the system specified or user pre-programmed limits.

The microprocessor has been pre-programmed with four (4) different control constants to accommodate the typical mass and materials of most common devices. Each constant has been assigned an access code which can be selected either through the front panel (Section 3-8.1) controls or over the bus (Section B-8.4) if the IEEE-488 option is installed. Upon power up the system defaults to -980. These constants will only be effective when the system is operating under DUT control.

For devices other than those shown select the constant which closely approximates the device to be tested and make some response measurements then repeat the measurements using the other constants to find the optimum condition.

Refer to Section 3-8 for "Additional Microprocessor Functions" which permit setting other operating parameters such as soak times and air temperature limits.

APPENDIX C
APPLICATION NOTES

This Section provides procedures and techniques which have proven useful in the utilization of ThermoStream® Systems. By becoming familiar with this information and adhereing to the principles presented maximum system performance will be ensured as will user satisfaction.

A separate section for each note, see list below, is provided here.

Appendix	Note
C-1	Physical Principles of ThermoStream® Systems
C-2	ThermoStream® Interfacing Techniques
C-3	Minimizing DUT Temperature Stabilization Times
C-4	Test Specimen Temperature Measurement
C-5	Miniature Thermocouples for Surface Temperatures
C-6	ThermoStream® Mini-Chamber Application Note

APPENDIX C-1
PHYSICAL PRICIPLES OF THERMOSTREAM® SYSTEMS

C-1.1 INTRODUCTION

Temptronic ThermoStream® systems are precision tools. As is the case with all precision tools, they can be used to maximum benefit only if certain fundamental physical principles concerning their operation are fully considered by the user.

Following, is a brief discussion concerning the important physical principles as they relate to ThermoStream® usage.

C-1.2 TEMPERATURE CONTROL

Temptronic ThermoStream® systems provide temperature controlled gas, which can be conveniently used to provide test ambients at specific temperatures. It is important to remember, that the test specimen is outside the ThermoStream® temperature control loop and its temperature is controlled only secondarily by the ThermoStream® air.

C-1.3 HEAT TRANSFER

A ThermoStream® transfers heat to and from a test specimen by forced air convection. Heat transfer requires time; thus test specimen temperature changes will always lag ThermoStream® air temperature changes, as is illustrated graphically in Figure C-1.1.

Various test system variables affect the test specimen stabilization temperature and the time required to reach this stabilization temperature. The most significant of these variables are:

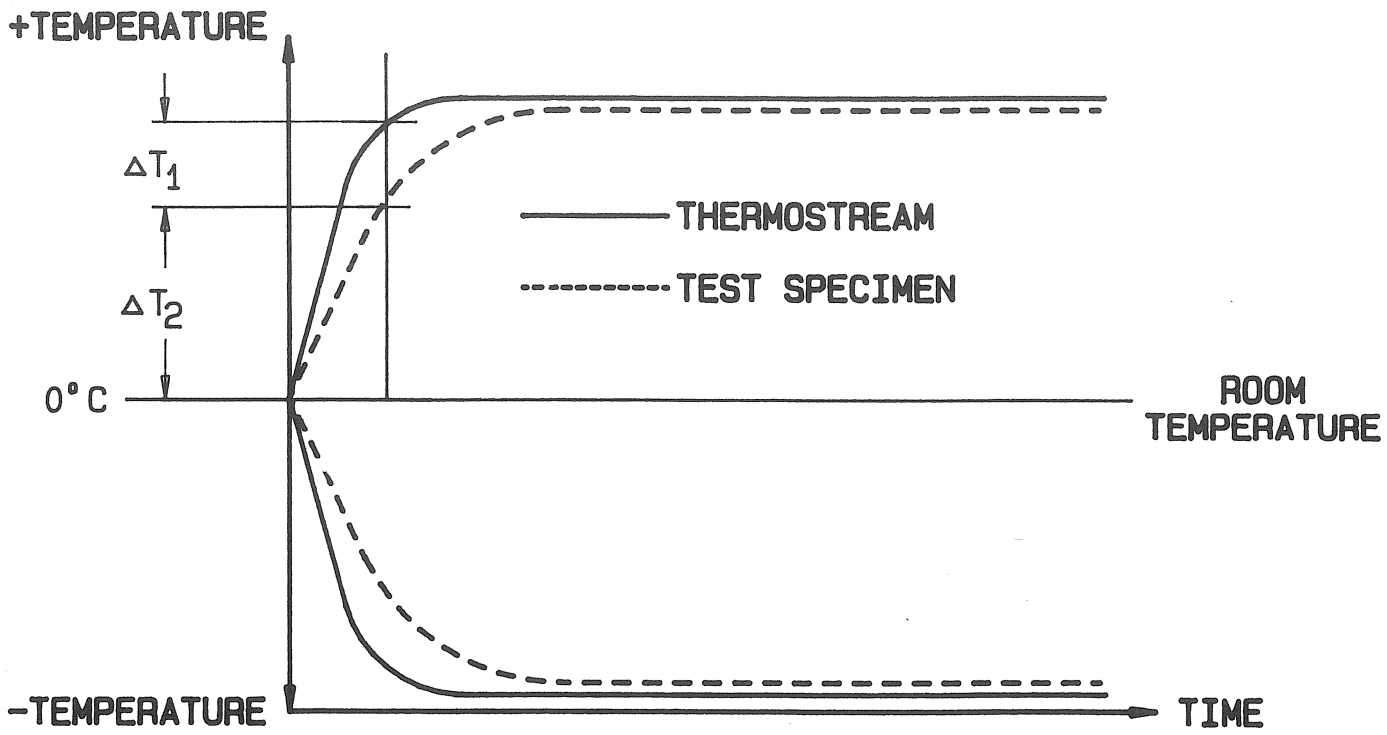

Figure C-1.1. ThermoStream^{R} air temperature and DUT temperature vs time.

1. The temperature difference between the ThermoStream^{R} air and the test specimen, continually changes until the test specimen reaches a stabilization temperature.

The greater the value of Delta T_1, the greater will be the forced convective heat transfer rate and the shorter will be the time for the test specimen to reach a stabilization temperature. Thus, when Delta T_1 is large, the test specimen temperature will change more rapidly than when Delta T_1 is small.

2. The temperature difference between the test specimen and the room ambient temperature Delta T_2, continually increases until the test specimen reaches a stabilization temperature. The greater the value of Delta T_2, the greater will be the heat transfer losses to or from the test specimen and the longer the time will be to reach stabilization.

3. The largest heat transfer loss from the test specimen is via thermal conduction from the test specimen through its mounting to the room ambient temperature zone. This can be minimized through selection of low thermal condutivity materials, long thermal conduction paths, and small thermal conduction path areas.

4. The greater the mass in the test zone, the longer will be the time necessary to change its temperature between two limits. Though the test specimen mass is normally fixed, the masses of fixturing in the test zone may be designed to minimize mass.

5. The greater the specific heat of the mass in the test zone, the longer the time will be to change its temperature between two limits. Specific heats of any fixturing in the test zone, may be minimized through careful selection of low specific heat materials.

6. The better the thermal coupling between the temperature controlled air and the test specimen, the shorter will be the time required to change the test specimen temperature between two limits and the smaller the temperature difference will be between the test specimen and the air stream at temperature stabilization. In general, thermal coupling is maximized through fixturing which permits the maximum percentage of temperature controlled air to impinge on the test sample rather than being wasted in transferring heat to or from masses that do not require temmperature control.

C-1.4 HIGH AND LOW TEMPERATURE CONSIDERATIONS

In using a ThermoStream^{R} to achieve temperatures in test specimens, the user must have fixturing which will limit high and low temperatures to a well-defined test zone so that temperature-sensitive parts of the remainder of the test setup are not damaged. This can be accomplished through fixture design, incorporating long thermal paths through small areas of low thermal conductivity materials and by baffling to limit the high and low temperature air to only the test zone.

C-1.5 DEW POINT CONSIDERATIONS

In addition to the temperature considerations of the previous paragraphs, the user must apply a ThermoStream^{R} in a manner which will prevent or minimize condensation of moisture. Within the test zone, the air has a moisture content with a dew point below the temperature capability of a ThermoStream^{R} and no condensation will occur. Outside the test zone, however, condensation will occur if the temperature is below the dew point temperature of the ambient air. Where condensation can damage other parts of the test system, it must be minimized by 1) limiting times at low temperatures so that a damaging amount of condensation does not have sufficient time to form, or 2) by maintaining temperatures above the dew point by limiting thermal conduction (see paragraph C-1.4 and/or 3) by heating the subject areas.

APPENDIX C-2
THERMOSTREAM® INTERFACING TECHNIQUES

C-2.1 UTILIZATION OF SILICONE FOAM INSULATION KIT

A general problem encountered in the testing of components at both reduced and elevated temperatures, is that of preventing the heat transfer from the device under test within the chamber to the external test equipment. Since thermal conductivity is the mode of appreciable heat transfer, it is obvious that the use of materials which have low thermal conductivity is desirable.

Another form of heat transfer that must be considered, is that by forced convection, which occurs as a result of the gas flow turbulence inside the test chamber. Undesired heat transfer by forced convection can be minimized by sealing any gas leakage paths within the tester interface.

Silicone foam in sheet form combines the property of low thermal conductivity with the added features of elasticity and the ease with which it can be cut to fit snugly around a given component configuration, thereby forming a seal to minimize heat transfer due to forced convection.

An insulation kit, part number ZAK40480, is supplied with each ThermoStream® System. This kit is comprised of three sheets of silicone foam material (12" X 12" X 1/8", 12" X 12" X ¼", and 12" X 12" X ½") and a tube of RTV adhesive. Proper application of this material, offers the user a simple and economical solution to the thermal interface problems created by the wide range of environment induced around the test site. A typical interface using the silicone foam insulation kit, is shown in Figure C-2.1.

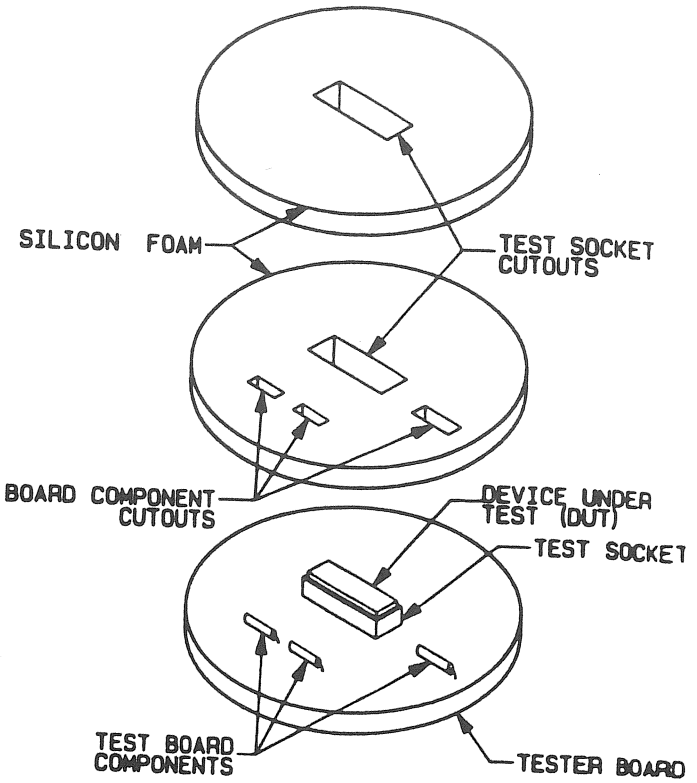

Figure C-2.1. Typical foam/board assembly.

C-2.2 ADDITIONAL INTERFACING TECHNIQUES

Low temperature testing presents the additional problem of possible condensation and/or icing at the tester interface. As a result of the low dew point (less than -80°C.) of the supply gas, condensation within the test chamber is not a problem. However, thermal conduction and forced convection may cause condensation to appear on the cables and/or interconnecting devices to the test equipment, which are normally located in a room environment having dew points on the order of 15°C. For those test procedures that require abbreviated soak times at reduced

temperatures, condensation is minimal or nonexistent. However, long-term testing at reduced temperatures, may require that additional precautionary measures be taken to prevent condensation, especially where the measurements of low-level voltages and currents are involved. Such precautions may simply require the use of additional foam insulation or, in extreme cases, require that the area exhibiting condensation be flushed with room air or dry gas (e.g. nitrogen) as shown in Drawing B4197 (Page C-2.5).

There is no universal solution to the thermal problems that may occur as a result of the variations in component geometry, the temperature range, and the soak times required for a specific test. However, the readily available and comparatively low cost silicone foam and RTV adhesive, offer the user an effective interface solution to the majority of thermal problems. The user is encouraged to make use of the insulation kit to provide an economical alternative to that of an expensive dedicated interface. In the case of a specific application where the temperature range and soak time are defined, the Temptronic Corporation engineering staff would welcome the opportunity to assist the user in the design of a custom interface.

AT TEST TEMPERATURES BELOW ROOM AMBIENT

1- DUT & TEST SOCKET MUST BE MOISTURE PROTECTED BY USING THE THERMOCAP TO SILICON RUBBER SEAL.

2- BEST MIOSTURE PROTECTION OF TESTER ELECTRONICS CAN BE ACHIEVED BY A STAND-OFF, FIBERGLASS PLATFORM, & WARMING A SHORT EXTENSION OF TEST SOCKET LEADS.

3- BY UTILIZING A THERMAL ENCLOSURE (SHROUD) TO CONFINE THE TEMPERATURE CONTROLLED AIR WITHIN THE AREA AROUND THE DUT & SOCKET, YOU WILL ACHIEVE HEAT TRANSFER, FROM AIRSTREAM TO DUT.

NOTE: TEST TIME FACTORS DEPEND ON MASS, SPECIFIC HEAT CHARACTERISTICS, THE THERMAL COUPLING & THERMAL CONDUCTION PATHS TO THE DUT, DETERMINED BY IT'S FIXTURING.

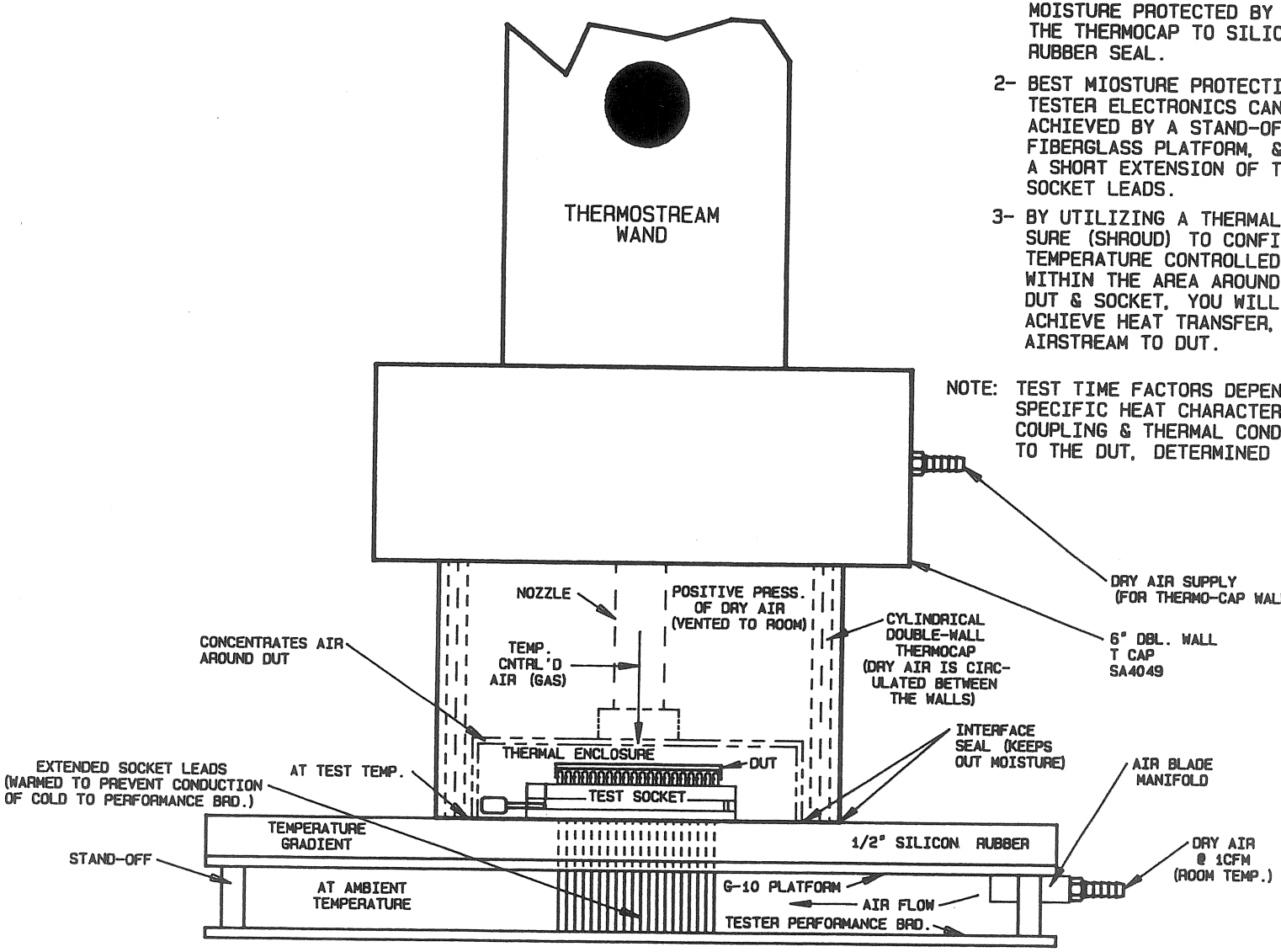

REVISIONS				
ZONE	LTR	DESCRIPTION	DATE	APPROVED
	B	REVISED PER ECN 2467	7.12.84	Dana

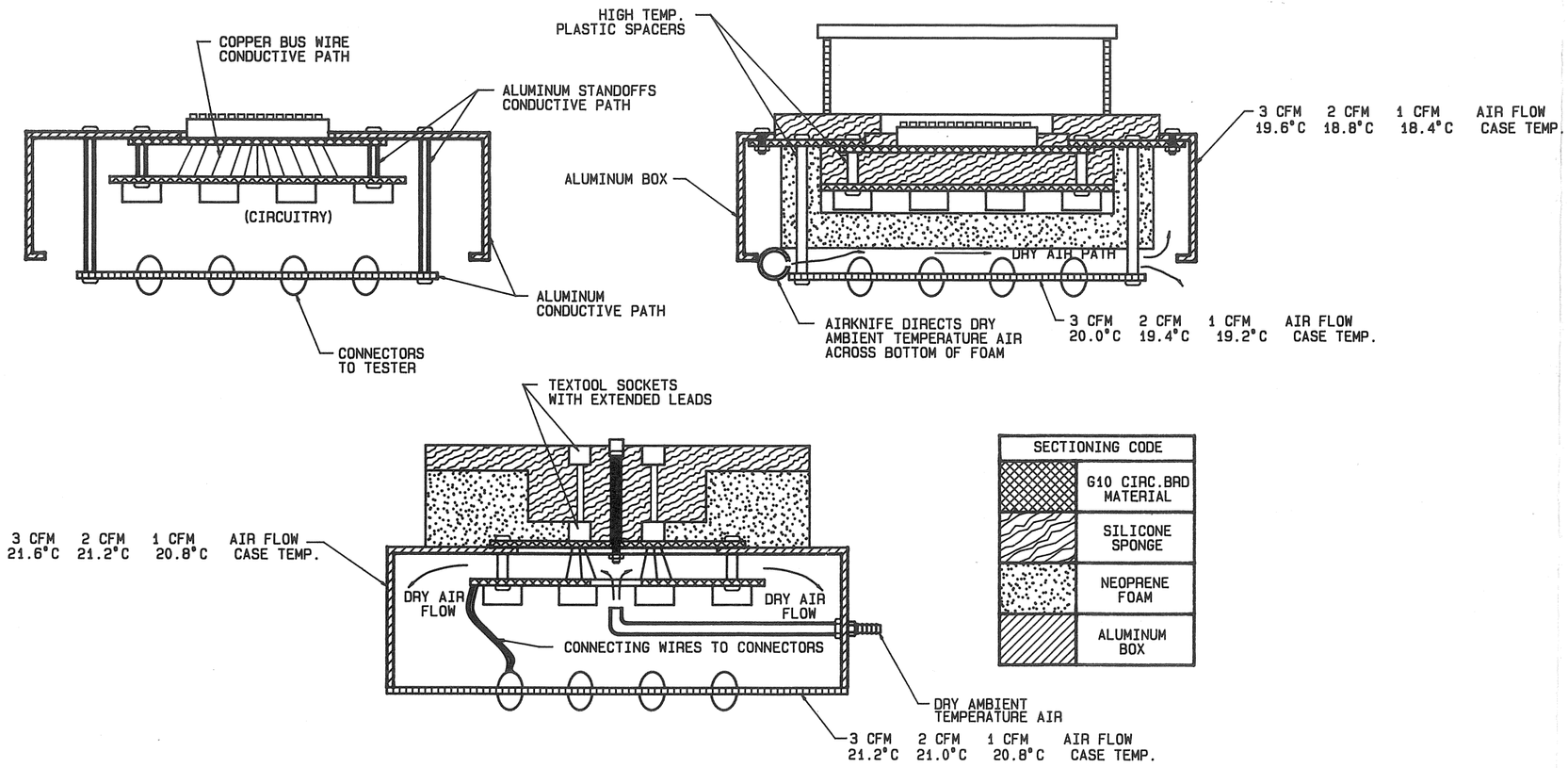

Appendix C-2	LM51130	TP0412P
NEXT ASSY	USED ON	SYSTEM
APPLICATION		

UNLESS OTHERWISE SPECIFIED DIMENSIONS ARE IN INCHES TOLERANCES ARE:
FRACTIONS ± 1/64 DECIMALS .XX ± .015 .XXX ± .005 ANGLES ± 30'

MATERIAL

FINISH

DO NOT SCALE DRAWING

CONTRACT NO.

APPROVALS		DATE
DRAWN	B.DELPRETE	3-14-84
CHECKED		
ENG	Dana	7.12.84

UNLESS OTHERWISE SPECIFIED RESISTANCE VALUES ARE IN OHMS ± % WATT
CAPACITANCE VALUES ARE IN ± % VOLTS

TEMPTRONIC CORP.

"T" STREAM INTERFACE

SIZE	CODE IDENT NO.	DRAWING NO.	REV
B		4197	B

SCALE NA SHEET 1 OF 1

APPENDIX C-3
MINIMIZING TEST SPECIMEN TEMPERATURE STABILIZATION TIMES

This Appendix outlines techniques that have proven helpful in shortening the time necessary to bring a test specimen to a stable test temperature and thus, to increase the testing throughput. All the techniques discussed, are applications of the physical principles discussed in Appendix C-1.

The following discussion includes both an explanation of each technique and ThermoStream® test results of some of the techniques that illustrate the effect of applying each technique.

C-3.1 MINIMIZING THE TEST ZONE VOLUME

The glass ThermoCap supplied with a ThermoStream® System has a volume of approximately 40 cubic inches. Yet a typical test specimen, may have a substantially smaller volume. Normally, it is necessary to bring only the test specimen and the test fixturing to the test temperature. Thus, the provision of a small chamber which contains only these elements within the ThermoCap, will reduce the volume and mass which are brought to temperature and should substantially reduce the time required for the test specimen to reach a stabilized test temperature, and should also reduce the difference between the ThermoStream® air temperature and the test specimen stabilized test temperature.

To illustrate the validity of the above, a 40-pin ceramic DIP was tested. First using a TP450 system as manufactured and then repeating the test after enclosing the component and socket in a 1-inch x 5/8-inch x 2-3/4-inch plastic box. The bottom of the box was open to go over the component, and socket, and the ThermoStream® nozzle was projected through the top of the box. A thermocouple soldered to the bottom of the component was used to measure component temperature. The results are given in Table C-3.1

Table C-3.1. Results of tests using a reduced test zone volume.

Condition	Component Temperature Change	Thermo-Stream Air Temperature	Component Stabilization Temperature	Time in Seconds for Component to Reach Stabilization Temperature ±1°C
Without Inner Chamber	+25°C to -55°C +25°C to +125°C	- 59°C +129°C	- 55°C +125°C	186 202
With Inner Chamber	+25°C to -55°C +25°C to +125°C	- 56°C +126°C	- 55°C +125°C	100 80

C-3.2 USE OF TWO TEMPERATURE TEST SEQUENCE

The greater the difference between the ThermoStream® air temperature and the test specimen temperature, the higher the rate of heat transfer between the two. Also, the greater the rate of heat transfer, the faster the temperature of the test specimen will change.

Thus, when a ThermoStream® is used to change a test specimen temperature, a maximum rate of temperature change is achieved if the following sequence is followed:

1. Set the temperature controlled gas to a safe (to test specimen) temperature, beyond the control temperature desired.

2. Maintain the gas temperature set in step 1 until the test specimen reaches the control temperature.

3. Change the gas temperature to the temperature necessary to maintain the test specimen at the control temperature.

Using the test setup described in Section C-3.1 (with the inner chamber in place), the results given in Table C-3.2 were achieved and illustrate the "Two Temperature Test Sequence."

Table C-3.2. Results of Two Temperature Test Sequence.

Component Temperature Change	Step 1 Set Temperature	Step 2 Set Temperature	Time in Seconds for Component to Reach Stabilization Temperature ±1°C
+25°C to -55°C	- 65°C	- 56°C	92
+25°C to +125°C	+150°C	+126°C	50

It should be noted, that these results exhibit a further improvement over the results of Section C-3.1.

C-3.3 FIXTURE PRESOAK

When testing at temperatures above the ambient air dew point temperature, the time necessary to change the test specimen temperature to the test temperature, can be shortened, if the fixturing in the test zone is left at the test temperature rather than returned to room temperature after each test. In this mode of operation, only the test specimen temperature requires changing and thus, the temperature stabilization time can be shortened. Results of tests conducted in this manner are given in Table C-3.3.

Table C-3.3. Results of tests in which test fixturing remained at test temperature.

Component Temperature Change	Socket Temperature at Start of Test	Step 1 Set Temperature	Step 2 Set Temperature	Time in Seconds for Component to Reach Stabilization Temperature ±1°C
+25 to 125°C	+125°C	126°C	126°C	26
+25 to 125°C	+125°C	150°C	126°C	15

C-3.4 PRESOAK

When testing specimens at temperatures above the dew point temperature of the ambient air, large groups of specimens can be held near the test temperature in a temperature chamber and transferred singly to the ThermoStream® temperature controlled zone for testing at an accurate controlled test temperature. This will shorten the time necessary to bring the specimen to the test temperature.

NOTE

The modes of operation described in Sections C-3.3 and C-3.4, may be possible at some test temperatures below room temperature. However, condensation of moisture on the cold test fixture, may preclude these modes of operation, or it may limit their use to a small number of cycles. Users will have to determine by electrical test in their specific applications if these are viable operating modes.

APPENDIX C-4
TEST SPECIMEN TEMPERATURE MEASUREMENT

This appendix discusses techniques of attaching thermocouples to test specimen cases. Proper thermocouple attachment is necessary for accurate temperature measurements, which in turn, are necessary to determine test specimen temperature stabilization times (see Appendix C-3).

When mating test specimen thermocouples, do not use thermocouple wire thicker than No. 36 gauge (0.005 inch/0.013 mm). Thicker wires will conduct excessive heat between the test specimen and the ambient, resulting in inaccurate temperature measurements. The following examples show methods for thermocouple attachment to solderable and nonsolderable test specimens.

Unsatisfactory

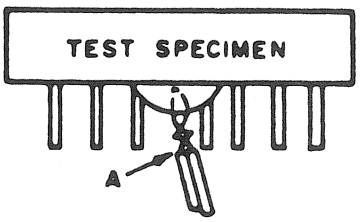

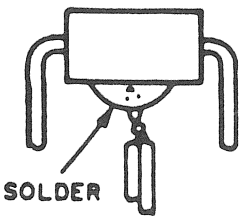

Measures temperature at "A" (Wires first join at "A")

Improvement No. 1

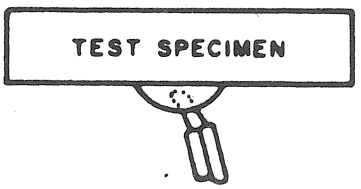

Measures temperature at surface but thermocouple wire may conduct some heat from or to ambient.

Improvement No. 2

Thermocouple wire is in contact with the surface to be measured for a length of at least 30 times the diameter of the thermocouple wire.

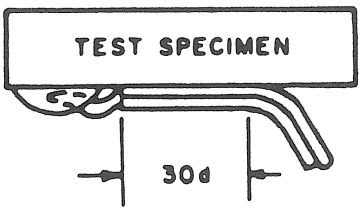

Alternative No. 1

Where soldering to the surface is either impossible or undesirable, a thin copper plate and a film of thermal grease act as a thermal path between thermocouple junction and component surface.

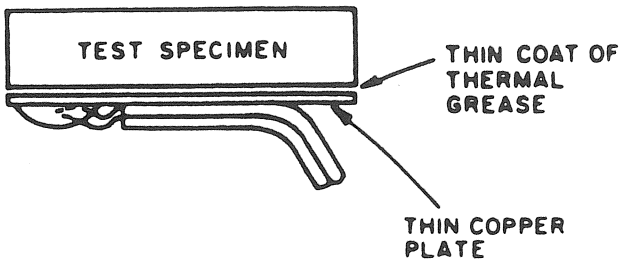

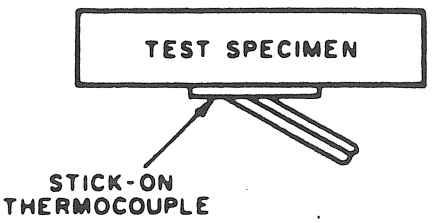

Alternative No. 2

Adhesive-backed thermocouple assemblies are available that meet the criteria for accurate temperature measurements. Examples of such thermocouples are given in Appendix C-5.

APPENDIX C-5

THERMOCOUPLES

HY-CAL Engineering

A Unit of General Signal

- ☐ **Small Size**
- ☐ **Easy Mount**
- ☐ **Fast Response**
- ☐ **High Accuracy**
- ☐ **Low Cost**

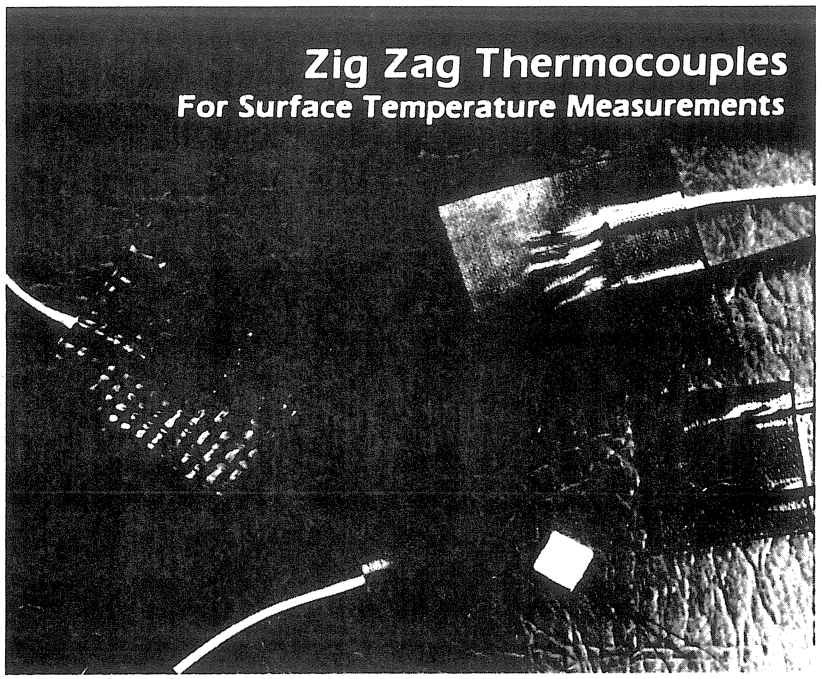

The Zig Zag Thermocouple is a low profile patch type surface sensor. In this configuration the thermocouple wires are inserted between two very thin insulating materials in a serpentine pattern with the thermocouple junction located near the center.

When the thermocouple is bonded to a surface the pattern wire is heated with the measuring junction, preventing conduction losses from the junction for maximum surface temperature measurement accuracy.

Three Models

Three models are available: Lo-Temp, Hi-Temp, and Very Hi-Temp. The Lo-Temp is manufactured in three patch sizes: 1", 5/8", and 1/2" square. These are encased in Kapton and include special pressure sensitive silicon adhesive backing.

The thermocouple junction in the Hi-Temp model is fused in Kapton, including the lead wire.

The Very Hi-Temp model is a 5 or 10 mil Zig Zag Thermocouple encased in ceramic, and is 3/16" x 5/16".

Fast Response

The microfine wire used for the Zig Zag thermocouple junction permits a response time of 20 milliseconds. The welded junction is kept to a size equal to the wire diameter of the two dissimilar metals, which increases the fast response capability.

Easy Mount

The Zig Zag can be mounted on any metallic or non-metallic clean surface. For the Lo-Temp models, simply remove the paper backing and mount. To bond the Kapton sensors use an epoxy adhesive, heat transfer paste, or other adhesive. The commercially available "Sauereisen No. 1" general purpose cement is recommended for the ceramic sensor.

Thermocouples

9650 Telstar Avenue · El Monte, CA 91731-3093 · (818)444-4000 · Telex 67-5548

General Specifications:

Temperature Range:	Lo-Temp;	−215°C to +175°C (−320°F to +350°F)
	Hi-Temp;	−215°C to +230°C (−320°F to +450°F)
	Very Hi-Temp;	* −65°C to +450°C (−150°F to +850°F)
Thermocouple Types:	J, K, T, E	
Patch Material:	Lo-Temp; Kapton* Hi-Temp; Kapton* Very Hi-Temp; Ceramic	
Wire Size:	5 mil or 10 mil	
Leads:	Lo-Temp; Leads 6″ Fiberglass sleeved. For longer leads 28 to 30 gauge FEP Teflon* insulated Thermocouple Wire	
	Hi-Temp; Leads are 28 to 30 gauge FEP Teflon* insulated Thermocouple Wire	
	Very Hi-Temp; Leads are 28 to 30 gauge fiberglass insulated Thermocouple Wire	
Accuracy:	Meets ANSI Standard Limits of Error	

*Trademark E.I. DuPont Co.

Thermocouple Styles

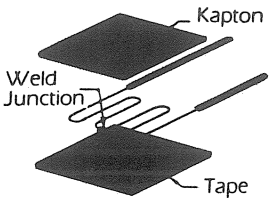

Model TC-2345
Lo-Temp
Encased in Kapton

Model TC-2345
Hi-Temp
Fused in Kapton

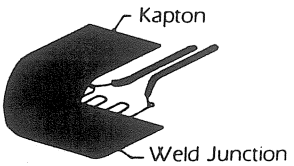

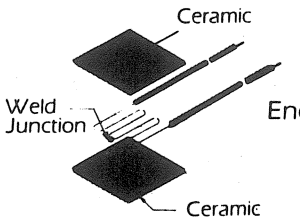

Model TC-2345
Very Hi-Temp
Encased in Ceramic

Ordering Information

Zig Zag Thermocouples

Basic Model	Description
TC-2345-A	Lo-Temp, Kapton-Encased; 1/2″ x 1/2″ x .010″ nom.
TC-2345-B	Lo-Temp, Kapton-Encased; 5/8″ x 5/8″ x .010″ nom.
TC-2345-C	Lo-Temp, Kapton-Encased; 1″ x 1″ x .010″ nom.
TC-2345-H	Hi-Temp, Kapton-Fused; 1″ x 1″ x .010″ nom.
TC-2345-P	Very Hi-Temp, Ceramic-Encased; 3/16″ x 5/16″ x .070″ nom. (Thermocouple Type T, and 10 mil Wire Size N.A.)

Code 1	Thermocouple Type
E	Chromel-Constantan
J	Iron-Constantan
K	Chromel-Alumel
T	Copper-Constantan

Code 2	Junction Wire Size
__	Specify Wire Size: 5 mil, or 10 mil

Code 3	Lead Wire Length
__	Specify in Inches (6″ Standard)

9650 Telstar Avenue · El Monte, CA 91731-3093 · (818)444-4000 · Telex 67-5548

863-84-2 PRINTED IN U.S.A.

Zig Zag Thermocouples

Basic Model	Description	Base Price
TC-2345-A	Lo-Temp, Kapton-Encased; 1/2" x 1/2" x .010" nom.	$16.50
TC-2345-B	Lo-Temp, Kapton-Encased; 5/8" x 5/8" x .010" nom.	$16.50
TC-2345-C	Lo-Temp, Kapton-Encased; 1" x 1" x .010" nom.	$16.50
TC-2345-H	Hi-Temp, Kapton-Encased; 1" x 1" x .010" nom.	$34.75
TC-2345-P	Very Hi-Temp, Ceramic-Encased; 3/16" x 5/16" x .070" nom. (Thermocouple Type T, and 10 mil Wire Size N.A.)	$34.75

Code 1	Thermocouple Type
E	Chromel-Constantan
J	Iron-Constantan
K	Chromel-Alumel
T	Copper-Constantan

Code 2	Junction Wire Size
——	Specify Wire Size: 5 mil, or 10 mil

Code 3	Lead Wire Length	
——	Specify in Inches (6" Standard)	If over 6", ADD/FT. $ .80

ADD/FT.

Total $

9650 Telstar Avenue•El Monte, CA 91731-3093•(818) 444-4000•Telex 67-5548•FAX (818) 444-1314

Celsius-Fahrenheit Conversions

$$°C = \frac{5(°F-32)}{9} \qquad °F = \frac{°C(9)}{5} + 32$$

To C	To Convert Degrees F or C	To F
-17.78	0	32
-12.22	10	50
-6.67	20	68
-1.11	30	86
4.44	40	104
10	50	122
15.56	60	140
21.11	70	158
26.67	80	176
32.22	90	194
37.78	100	212
43.33	110	230
48.89	120	248
54.44	130	266
60	140	284
65.56	150	302
71.11	160	320
76.67	170	338
82.22	180	356
87.78	190	374
93.33	200	392
98.89	210	410
104.44	220	428
110	230	446
115.56	240	464
121.11	250	482
126.67	260	500
132.22	270	518
137.78	280	536
143.33	290	554
148.89	300	572
154.44	310	590
160	320	608
165.56	330	626
171.11	340	644
176.67	350	662
182.22	360	680
187.78	370	698
193.33	380	716
198.89	390	734
204.44	400	752
210	410	770
215.56	420	788
221.11	430	806
226.67	440	824
232.22	450	842
237.78	460	860
243.33	470	878
248.89	480	896
254.44	490	914
260	500	932
	510-1000	
265.56	510	950
271.11	520	968
276.67	530	986
282.22	540	1004
287.78	550	1022
293.33	560	1040
298.89	570	1058
304.44	580	1076
310	590	1094
315.56	600	1112
321.11	610	1130
326.67	620	1148
332.22	630	1166
337.78	640	1184
343.33	650	1202
348.89	660	1220
354.44	670	1238
360	680	1256
365.56	690	1274
371.11	700	1292
376.67	710	1310
382.22	720	1328
387.78	730	1346
393.33	740	1364
398.89	750	1382
404.44	760	1400
410	770	1418
415.56	780	1436
421.11	790	1454
426.67	800	1472
432.22	810	1490
437.78	820	1508
443.33	830	1526
448.89	840	1544
454.44	850	1562
460	860	1580
465.56	870	1598
471.11	880	1616
476.67	890	1634
482.22	900	1652
487.78	910	1670
493.33	920	1688
498.89	930	1706
504.44	940	1724
510	950	1742
515.56	960	1760
521.11	970	1778
526.67	980	1796
532.22	990	1814
537.78	1000	1832
	1010-1500	
543.33	1010	1850
548.89	1020	1868
554.44	1030	1886
560	1040	1904
565.56	1050	1922
571.11	1060	1940
576.67	1070	1958
582.22	1080	1976
587.78	1090	1994
593.33	1100	2012
598.89	1110	2030
604.44	1120	2048
610	1130	2066
615.56	1140	2084
621.11	1150	2102
626.67	1160	2120
632.22	1170	2138
637.78	1180	2156
643.33	1190	2174
648.89	1200	2192
654.44	1210	2210
660	1220	2228
665.56	1230	2246
671.11	1240	2264
676.67	1250	2282
682.22	1260	2300
687.78	1270	2318
693.33	1280	2336
698.89	1290	2354
704.44	1300	2372
710	1310	2390
715.56	1320	2408
721.11	1330	2426
726.67	1340	2444
732.22	1350	2462
737.78	1360	2480
743.33	1370	2498
748.89	1380	2516
754.44	1390	2534
760	1400	2552
765.56	1410	2570
771.11	1420	2588
776.67	1430	2606
782.22	1440	2624
787.78	1450	2642
793.33	1460	2660

°Cool °Facts

9650 Telstar Avenue · El Monte, CA 91731-3093 · (818)444-4000 · Telex 67-5548

To C	To Convert Degrees F or C	To F
798.89	1470	2678
804.44	1480	2696
810	1490	2714
815.56	1500	2732
	1510–2000	
821.11	1510	2750
826.67	1520	2768
832.22	1530	2786
837.78	1540	2804
843.33	1550	2822
848.89	1560	2840
854.44	1570	2858
860	1580	2876
865.56	1590	2894
871.11	1600	2912
876.67	1610	2930
882.22	1620	2948
887.78	1630	2966
893.33	1640	2984
898.89	1650	3002
904.44	1660	3020
910	1670	3038
915.56	1680	3056
921.11	1690	3074
926.67	1700	3092
932.22	1710	3110
937.78	1720	3128
943.33	1730	3146
948.89	1740	3164
954.44	1750	3182
960	1760	3200
965.56	1770	3218
971.11	1780	3236
976.67	1790	3254
982.22	1800	3272
987.78	1810	3290
993.33	1820	3308
998.89	1830	3326
1004.44	1840	3344
1010	1850	3362
1015.56	1860	3380
1021.11	1870	3398
1026.67	1880	3416
1032.22	1890	3434
1037.78	1900	3452
1043.33	1910	3470
1048.89	1920	3488
1054.44	1930	3506
1060	1940	3524
1065.56	1950	3542
1071.11	1960	3560
1076.67	1970	3578
1082.22	1980	3596
1087.78	1990	3614
1093.33	2000	3632
	2010–2500	
1098.89	2010	3650
1104.44	2020	3668
1110	2030	3686
1115.56	2040	3704
1121.11	2050	3722
1126.67	2060	3740
1132.22	2070	3758
1137.78	2080	3776
1143.33	2090	3794
1148.89	2100	3812
1154.44	2110	3830
1160	2120	3848
1165.56	2130	3866
1171.11	2140	3884
1176.67	2150	3902
1182.22	2160	3920
1187.78	2170	3938
1193.33	2180	3956
1198.89	2190	3974
1204.44	2200	3992
1210	2210	4010
1215.56	2220	4028
1221.11	2230	4046
1226.67	2240	4064
1232.22	2250	4082
1237.78	2260	4100
1243.33	2270	4118
1248.89	2280	4136
1254.44	2290	4154
1260	2300	4172
1265.56	2310	4190
1271.11	2320	4208
1276.67	2330	4226
1282.22	2340	4244
1287.78	2350	4262
1293.33	2360	4280
1298.89	2370	4298
1304.44	2380	4316
1310	2390	4334
1315.56	2400	4352
1321.11	2410	4370
1326.67	2420	4388
1332.22	2430	4406
1337.78	2440	4424
1343.33	2450	4442
1348.89	2460	4460
1354.44	2470	4478
1360	2480	4496
1365.56	2490	4514
1371.11	2500	4532
	2510–3000	
1376.67	2510	4550
1382.22	2520	4568
1387.78	2530	4586
1393.33	2540	4604
1398.89	2550	4622
1404.44	2560	4640
1410	2570	4658
1415.56	2580	4676
1421.11	2590	4694
1426.67	2600	4712
1432.22	2610	4730
1437.78	2620	4748
1443.33	2630	4766
1448.89	2640	4784
1454.44	2650	4802
1460	2660	4820
1465.56	2670	4838
1471.11	2680	4856
1476.67	2690	4874
1482.22	2700	4892
1487.78	2710	4910
1493.33	2720	4928
1498.89	2730	4946
1504.44	2740	4964
1510	2750	4982
1515.56	2760	5000
1521.11	2770	5018
1526.67	2780	5036
1532.22	2790	5054
1537.78	2800	5072
1543.33	2810	5090
1548.89	2820	5108
1554.44	2830	5126
1560	2840	5144
1565.56	2850	5162
1571.11	2860	5180
1576.67	2870	5198
1582.22	2880	5216
1587.78	2890	5234
1593.33	2900	5252
1598.89	2910	5270
1604.44	2920	5288
1610	2930	5306
1615.56	2940	5324
1621.11	2950	5342
1626.67	2960	5360
1632.22	2970	5378
1637.78	2980	5396
1643.33	2990	5414
1648.89	3000	5432
	3010–3200	
1654.44	3010	5450
1660	3020	5468
1665.56	3030	5486
1671.11	3040	5504
1676.67	3050	5522
1682.22	3060	5540
1687.78	3070	5558
1693.33	3080	5576
1698.89	3090	5594
1704.44	3100	5612
1710	3110	5630
1715.56	3120	5648
1721.11	3130	5666
1726.67	3140	5684
1732.22	3150	5702
1737.78	3160	5720
1743.33	3170	5738
1748.89	3180	5756
1754.44	3190	5774
1760	3200	5792

9650 Telstar Avenue · El Monte, CA 91731-3093 · (818)444-4000 · Telex 67-5548

164-78-2
PRINTED IN U.S.A.

HY-CAL Engineering
A Unit of General Signal

Response Time of Typical Thermocouple

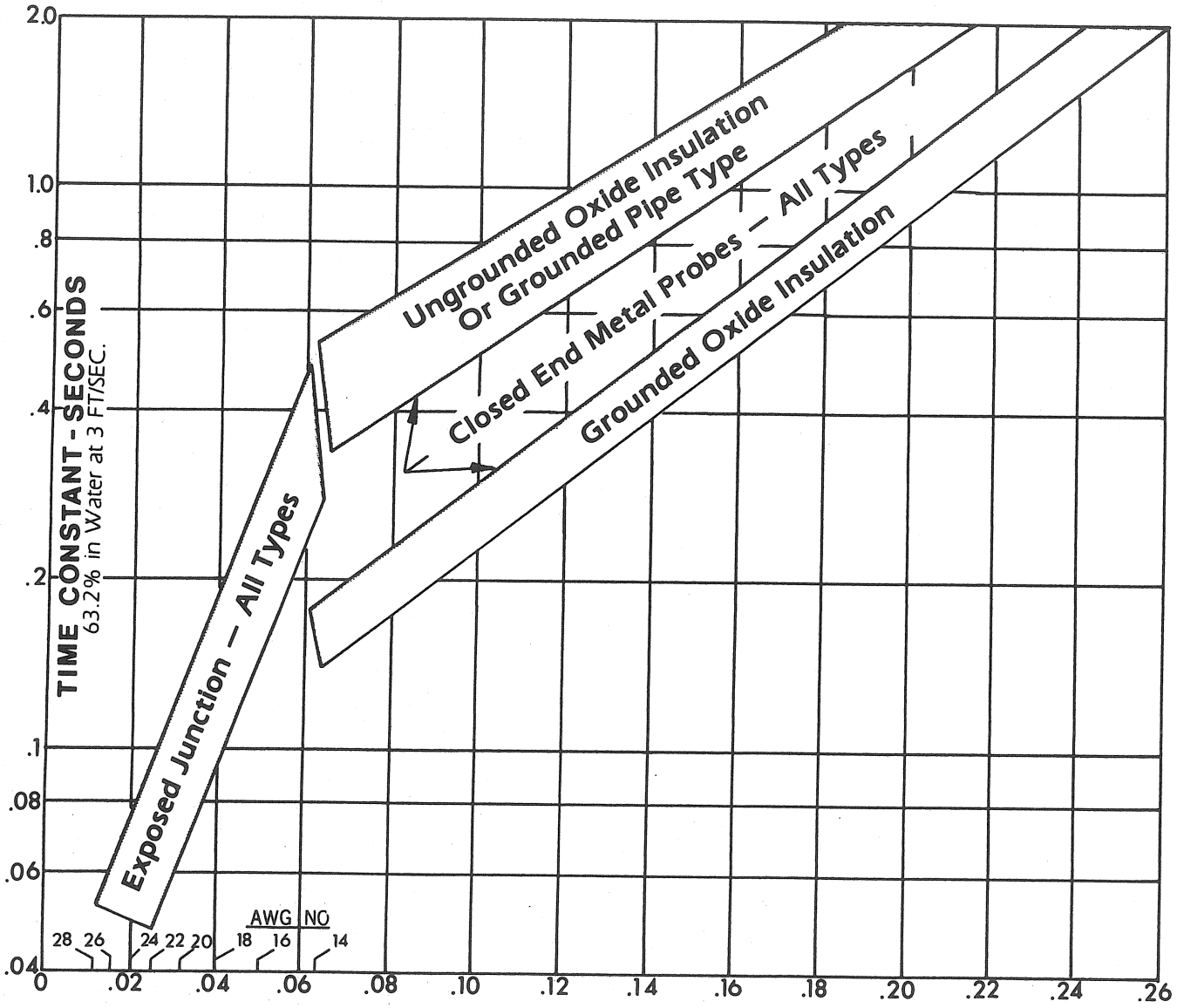

°Cool °Facts

9650 Telstar Avenue • El Monte, CA 91731-3093 • (818)444-4000 • Telex 67-5548

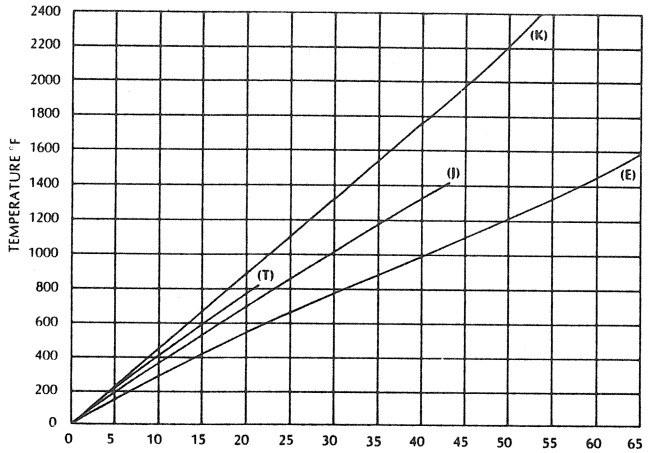

Low Temperature Thermocouple Materials

Type	Typical Thermocouple Material	Wire Color Code
K	CHROMEL—Alumel	(YELLOW—Red)
T	COPPER—Constantan	(BLUE—Red)
J	IRON—Constantan	(WHITE—Red)
E	CHROMEL—Constantan	(PURPLE—Red)

(Positive material in caps)

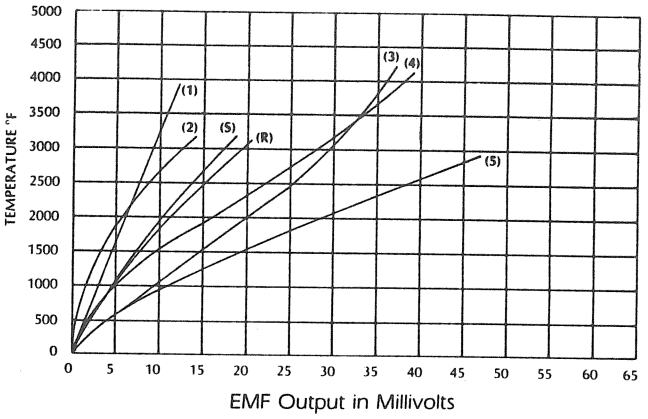

High Temperature Thermocouple Materials

Type	Typical Thermocouple Material	Wire Color Code
1	60% IRIDIUM 40% RHODIUM/Iridium	
2	PLATINUM 30% RHODIUM/Platinum 6% Rhodium	
3	TUNGSTEN 5% RHENIUM/Tungsten 26% Rhenium	
4	TUNGSTEN/Tungsten 26% Rhenium	
5	PT 5% MOLYBDENUM/Platinum 0.1% Molybdenum	
R	PLATINUM 13% RHODIUM/Platinum	(BLACK—Red)
S	PLATINUM 10% RHODIUM/Platinum	(BLACK—Red)

(Positive material in caps)

Recommended Temperature Limits for Protected Thermocouples

			Upper Temperature Limit for Various Wires Sizes (AWG)									
			8		14		20		24		28	
T/C Type	Nominal Temperature Range °C	°F	.128 in. °C	°F	.064 in. °C	°F	.032 in. °C	°F	.020 in. °C	°F	.013 in. °C	°F
E	– 184 to 871	– 300 to 1600	871	1600	649	1200	538	1000	427	800	427	800
J	0 to 760	32 to 1400	760	1400	593	1100	482	900	371	700	371	700
K	– 184 to 1260	– 300 to 2300	1260	2300	1093	2000	982	1800	871	1600	871	1600
T	– 184 to 371	– 300 to 700	399	750	371	700	260	500	204	400	204	400
N	0 to 1260	32 to 2300	1260	2300	1260	2300	1093	2000	982	1800	871	1600
R & S	0 to 1482	32 to 2700	—	—	—	—	—	—	1482	2700	—	—
B	538 to 1704	1000 to 3100	—	—	—	—	—	—	1704	3100	—	—
W	0 to 2315	32 to 4200	2315	4200	2315	4200	2315	4200	2315	4200	2315	4200

9650 Telstar Avenue • El Monte, CA 91731-3093 • (818)444-4000 • Telex 67-5548

411-78-2
Printed in U.S.A.

APPENDIX C-6
THERMOSTREAM® MINI-CHAMBER APPLICATION NOTE

C-6.1 GENERAL

While Temptronic Corporation ThermoStream® systems are designed principally for testing electronic components at temperature, they can also be used to test small printed circuit boards and other small, low mass, oddly shaped assemblies at temperature.

To use a ThermoStream® for PCB testing, the user requires only a very simple enclosure accessory which can be constructed, of easily available materials, using hand tools. This application note, covers the technical matters which should be considered in this construction.

C-6.2 TECHNICAL CONSIDERATIONS

a. The greater the mass of the assembly under test, the longer the time necessary for this assembly to reach the desired test temperature. We recommend that assemblies with masses no greater than eight (8) oz., be tested using a ThermoStream®.

b. The larger the test assembly (and thus the larger the test chamber), the larger will be the temperature gradient across the test assembly. A 6" x 6" PC card is the recommended upper size limit.

c. The test chamber volume should be kept low, consistent with room for air circulation around the test assembly. One-half inch of space on all sides of the test assembly is sufficient - more space may be detrimental as it will increase the system thermal loading.

d. The test chamber should be constructed using low thermal conductivity materials to minimize losses.

e. If possible, the test chamber should be constructed entirely of insulating material with no internal or external cover material. This will provide a chamber of low mass and low specific heat to minimize temperature excursion times.

f. Test chamber material should be chosen to withstand the test temperatures.

C-6.3 CHAMBER CONSTRUCTION

Sketch (SK 575) is provided to show the essential construction details for a typical printed circuit card temperature test chamber.

The following table, indicates some materials which conform to the technical considerations mentioned above, that could be used for chamber construction.

Temperature Range	Material	Adhesive	Source
-60°C to +70°C	Styrofoam Sheet[1]	White Glue	Lumber yard
-60°C to +100°C	Polyethelene Foam Sheet	Contact Cement	Packing material supplier
-60°C to +100°C	Elastomeric Sheet Insulation	Contact Cement	Refrigeration supply house
-60°C to +135°C	High Temperature Polyurethane Foam	Contact Cement	Foam Insulation suppliers (e.g. Eccofoam SH Emerson & Cummings Canton, MA 02021)
-60°C to +200°C	Silicon Rubber[2] Foam Sheet	RTV Silicone Rubber Adhesive Sealant	Temptronic Corp.

[1] For better durability, this material should be coated with an epoxy coating material (e.g. Eccoat 729 from Emerson & Cummings, Inc., Canton, MA 02021).

[2] Because of its relatively high price and lack of rigidity, this material should only be used as a chamber liner for high temperature testing.

1/2" thick with Styrofoam
3/8" thick with polyethylene and elastomeric sheet foams
1/4 " thick with polyurethane foam

C-6.4 TYPICAL CHAMBER TEST RESULTS

A 6½" H x 8½" W x 3" D (outside dimensions) chamber was constructed using polyethylene foam according to the construction details of SK 575. This chamber was attached to a standard TP450A and used to test a 3½" x 5" PC card which weighed four (4) oz.

PC Card Temperature Excursion Times in °C

-85°C	47°C	:	5 min. 30 sec.
-47°C	+85°C	:	3 min. 30 sec.

Temperature Gradient Across the Card

At +85°C	:	± 2°C
At -47°C	:	± 2°C

REVISIONS				
ZONE	LTR	DESCRIPTION	DATE	APPROVED
	A	RELEASED	3-7-85	MJP

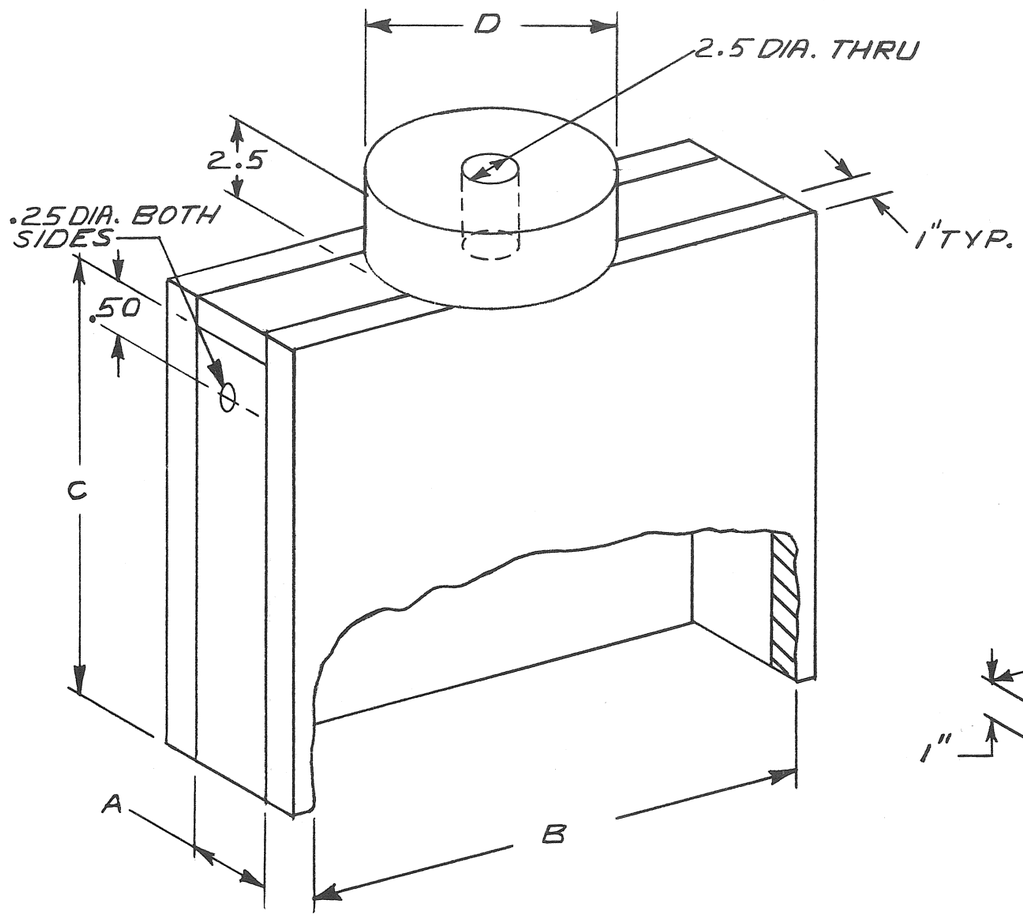

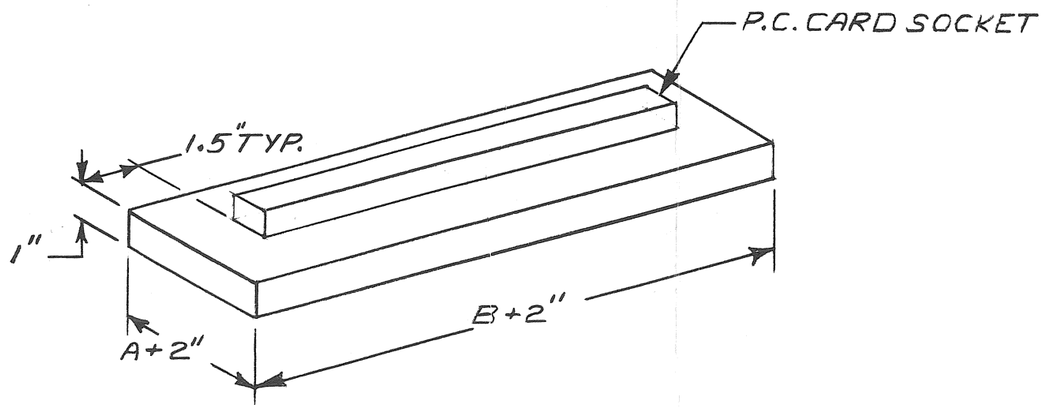

A P.C CARD DEPTH +1"
B P.C CARD WIDTH+1"
C P.C CARD HEIGHT+.5"
D A FRICTION FIT IN THERMOCAP (5"O.D FOR TP40, TP450 AND 5.125 OD FOR TP42, TP452)

NOTE: RIGID INSULATION MATERIALS MAY REQ. A WRAP OF A MORE FLEXIBLE MATERIAL TO PROVIDE THE FRICTION FIT OF DIMENSION 'D'

IMS1300 App C-6	TP04128
NEXT ASSY	USED ON

APPLICATION

UNLESS OTHERWISE SPECIFIED DIMENSIONS ARE IN INCHES
TOLERANCES ARE:
FRACTIONS DECIMALS ANGLES
± .XX ± ±
.XXX ±

MATERIAL: SEE APPL. NOTE

FINISH

DO NOT SCALE DRAWING

CONTRACT NO.

APPROVALS	DATE
DRAWN M. OBRIEN	3-18-80
CHECKED C.D	3-18-80

TEMPTRONIC CORP.

FOR THERMO STREAM MINI CHAMBER APPLICATION NOTE

SIZE	CODE IDENT NO.	DRAWING NO.	REV.
B		3947	A

SCALE | SHEET 1 OF 1

BISHOP GRAPHICS/ACCUPRESS REORDER NO. 2348

APPENDIX D
REPLY CARDS AND HANG TAGS

D-1 INTRODUCTION

This section of the manual contains user/owner registration cards and hang tags imprinted with TPO412A operating instructions.

D-2 USER/OWNER REGISTRATION CARDS

The (4) pre-numbered post card size cards are supplied as a single sheet. Upon receipt of the system, card #1 should be completed and returned to Temptronic. When ownership changes or additional personnel become responsible for the system, the remaining cards should be used. By following this procedure, you will be assured of receiving any important information pertinent to your system. At the earliest convenient time after receiving card #4, a replacement sheet of cards will be sent. If a for any reason this sheet is missing or was not replaced contact Temptronic Service Department and request LMS1480.

LMS1480

NO POSTAGE
NECESSARY
IF MAILED
IN THE
UNITED STATES

BUSINESS REPLY MAIL
FIRST CLASS PERMIT NO. 43242 BOSTON, MASS

POSTAGE WILL BE PAID BY ADDRESSEE

Temptronic Corporation
55 Chapel Street
Newton, MA., U.S.A.
02158

Attention: Customer Service 4

NO POSTAGE
NECESSARY
IF MAILED
IN THE
UNITED STATES

BUSINESS REPLY MAIL
FIRST CLASS PERMIT NO. 43242 BOSTON, MASS

POSTAGE WILL BE PAID BY ADDRESSEE

Temptronic Corporation
55 Chapel Street
Newton, MA., U.S.A.
02158

Attention: Customer Service 3

NO POSTAGE
NECESSARY
IF MAILED
IN THE
UNITED STATES

BUSINESS REPLY MAIL
FIRST CLASS PERMIT NO. 43242 BOSTON, MASS

POSTAGE WILL BE PAID BY ADDRESSEE

Temptronic Corporation
55 Chapel Street
Newton, MA., U.S.A.
02158

Attention: Customer Service 2

NO POSTAGE
NECESSARY
IF MAILED
IN THE
UNITED STATES

BUSINESS REPLY MAIL
FIRST CLASS PERMIT NO. 43242 BOSTON, MASS

POSTAGE WILL BE PAID BY ADDRESSEE

Temptronic Corporation
55 Chapel Street
Newton, MA., U.S.A.
02158

Attention: Customer Service 1

USER/OWNER REGISTRATION CARD (3)

User Name: _____

Dept.: _____ Mail Stop: _____

Company: _____

Street: _____

City: _____ State: _____ Zip: _____

Telephone: (_____) _____-_____ Ext. _____

First Time User? ( ) Yes ( ) No

Previous user continues to require info. ( ) Yes ( ) No

System Model No.: TP_____

System Serial No.: _____

USER/OWNER REGISTRATION CARD (4)

User Name: _____

Dept.: _____ Mail Stop: _____

Company: _____

Street: _____

City: _____ State: _____ Zip: _____

Telephone: (_____) _____-_____ Ext. _____

First Time User? ( ) Yes ( ) No

Previous user continues to require info. ( ) Yes ( ) No

System Model No.: TP_____

System Serial No.: _____

USER/OWNER REGISTRATION CARD (1)

User Name: _____

Dept.: _____ Mail Stop: _____

Company: _____

Street: _____

City: _____ State: _____ Zip: _____

Telephone: (_____) _____-_____ Ext. _____

First Time User? ( ) Yes ( ) No

Previous user continues to require info. ( ) Yes ( ) No

System Model No.: TP_____

System Serial No.: _____

USER/OWNER REGISTRATION CARD (2)

User Name: _____

Dept.: _____ Mail Stop: _____

Company: _____

Street: _____

City: _____ State: _____ Zip: _____

Telephone: (_____) _____-_____ Ext. _____

First Time User? ( ) Yes ( ) No

Previous user continues to require info. ( ) Yes ( ) No

System Model No.: TP_____

System Serial No.: _____

D-3 HANG TAGS

A single perforated sheet containing (2) hang tags imprinted with the system Start-up and Shut Down procedures as outlined in Section 3 of the system manual, is provided here for your convenience.

It is recommended that each owner/operator of the system become familiar with all the information presented in Section 3 of the manual before operating the system using the hang tags.

Remove (1) tag and attach it to the microprocessor controller handle using (1) of the (2) beaded tie wraps located in the binder's back cover pocket. The second card and tie wrap are provided in the event the card in use becomes lost or damaged.

Additional tags (P/N LMS1490 rev. A-1) and tie wraps (P/N EP00770) are available from the sevice department. When ordering replacement tags always reference system Code Number.

TEMPTRONIC
CORPORATION
55 Chapel Street, Newton, MA 02158
Telephone (617) 969-2501
Telex: 200-119 TEMP UR

RECOMMENDED TP0412A THERMOSTREAM START-UP AND SHUT-DOWN PROCEDURES TO BE FOLLOWED WITH SYSTEM WHICH HAS BEEN PROPERLY INSTALLED USING REQUIRED INTERCONNECTIONS AS DESCRIBED IN THE SYSTEM OPERATOR'S MANUAL

Effective Date: 6/86 Revision: A-1

3-6 SYSTEM START-UP

This procedure is recommended for system start-up once the initial setup, interfacing, and checkout have been successfully performed.

1. Verify all electrical and gas connections as outlined in Section 3-2.
2. Set +25°C on the TEMPERATURE SET switch (use the middle switch if the 5 TEMPERATURE SET option is installed).
3. Set the MODE SELECT switch to the desired position (Heat Only or Heat/Cool).
4. If convenient, note the refrigeration gauge readings to verify that there is pressure in the system. This especially applies if system is to be operated in the HEAT/COOL mode.
5. Initiate power by depressing the POWER switch.
6. Both TEST and TRANSITION valves will open to allow a 90-second gas purge and the HEAD will raise. The purge cycle will start ONLY when there is sufficient gas flow (minimum 2 SCFM). A flashing FLOW lamp indicates a lack of gas flow. After 90 seconds, the purge will be complete and gas flow will stop.

   Upon power-up, the following constants are set:
   - — Temperature range limits of −70°C and +205°C;
   - — Automatic valve switching;
   - — "SOAK TIME" of zero (0) seconds;
   - — DUT control-constant for a 40-pin plastic device (applicable only if the DUT option is installed).

   To change any of these constants, refer to Section 3-8.
7. Position the primary/ThermoCap against an insulated surface during this procedure or whenever the system is operating but not interfaced to the tester. This will prevent either inadvertent operator contact with extreme temperature air or condensation inside the ThermoCap during cold temperature operation.
8. If the OVERHEAT indicator lights, depress the RESET switch, then the FLOW switch to initiate flow.
9. Wait for a system "READY" status indication, then begin desired test functions.

Techniques for Safe and Efficient Air Coupling

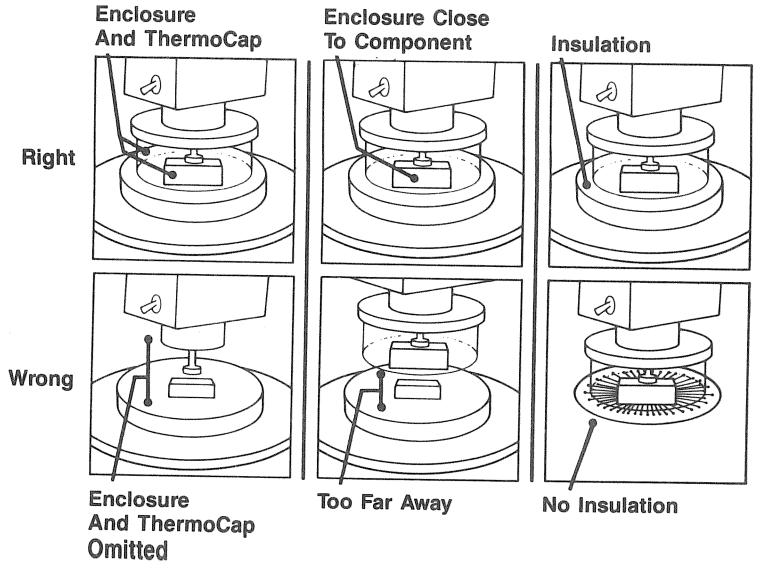

- The enclosure concentrates the gas flow for efficient heat transfer.
- The ThermoCap protects the test area from moisture
- The insulation protects the test area from temperature extremes.

Please refer to the appropriate **Temptronic System Manual** for more complete information or call our Customer Service Department (617) 969-2501.

3-7 SYSTEM SHUT-DOWN

The Model TP0412A ThermoStream System may be shut down at any time by simply depressing the system POWER switch on the front panel or throwing the system MAIN CIRCUIT BREAKER on the rear of the power controller. However, in the HEAT/COOL mode, the timed delay start-up sequence will be initiated during each start-up, so premature shut-downs or shut-downs for brief time periods (less than 30-minute durations) should be avoided. During these periods, simply leave the system on with the gas flow switch off.

The following procedure is suggested for routine system shut-down.

1. Set +25°C on the TEMPERATURE SET switch which is initiated during system start-up.
2. Command the system to go to +25°C. Wait for an "AT TEMP" indication before depressing the POWER switch.

TEMPTRONIC CORPORATION
55 Chapel Street, Newton, MA 02158
Telephone (617) 969-2501
Telex: 200-119 TEMP UR

RECOMMENDED TP0412A THERMOSTREAM START-UP AND SHUT-DOWN PROCEDURES TO BE FOLLOWED WITH SYSTEM WHICH HAS BEEN PROPERLY INSTALLED USING REQUIRED INTERCONNECTIONS AS DESCRIBED IN THE SYSTEM OPERATOR'S MANUAL

Effective Date: 6/86 Revision: A-1

3-6 SYSTEM START-UP

This procedure is recommended for system start-up once the initial setup, interfacing, and checkout have been successfully performed.

1. Verify all electrical and gas connections as outlined in Section 3-2.
2. Set +25°C on the TEMPERATURE SET switch (use the middle switch if the 5 TEMPERATURE SET option is installed).
3. Set the MODE SELECT switch to the desired position (Heat Only or Heat/Cool).
4. If convenient, note the refrigeration gauge readings to verify that there is pressure in the system. This especially applies if system is to be operated in the HEAT/COOL mode.
5. Initiate power by depressing the POWER switch.
6. Both TEST and TRANSITION valves will open to allow a 90-second gas purge and the HEAD will raise. The purge cycle will start ONLY when there is sufficient gas flow (minimum 2 SCFM). A flashing FLOW lamp indicates a lack of gas flow. After 90 seconds, the purge will be complete and gas flow will stop.

   Upon power-up, the following constants are set:
   - — Temperature range limits of −70°C and +205°C;
   - — Automatic valve switching;
   - — "SOAK TIME" of zero (0) seconds;
   - — DUT control-constant for a 40-pin plastic device (applicable only if the DUT option is installed).

   To change any of these constants, refer to Section 3-8.
7. Position the primary/ThermoCap against an insulated surface during this procedure or whenever the system is operating but not interfaced to the tester. This will prevent either inadvertent operator contact with extreme temperature air or condensation inside the ThermoCap during cold temperature operation.
8. If the OVERHEAT indicator lights, depress the RESET switch, then the FLOW switch to initiate flow.
9. Wait for a system "READY" status indication, then begin desired test functions.

Techniques for Safe and Efficient Air Coupling

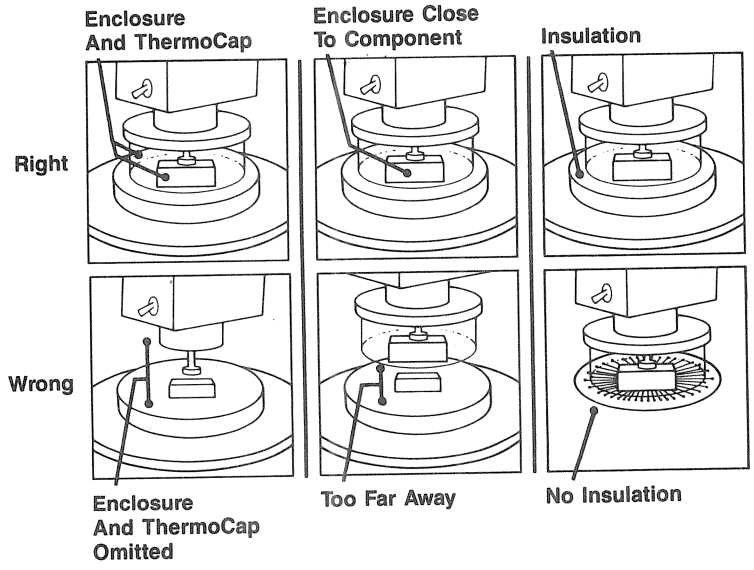

- The enclosure concentrates the gas flow for efficient heat transfer.
- The ThermoCap protects the test area from moisture
- The insulation protects the test area from temperature extremes.

Please refer to the appropriate **Temptronic System Manual** for more complete information or call our Customer Service Department (617) 969-2501.

3-7 SYSTEM SHUT-DOWN

The Model TP0412A ThermoStream System may be shut down at any time by simply depressing the system POWER switch on the front panel or throwing the system MAIN CIRCUIT BREAKER on the rear of the power controller. However, in the HEAT/COOL mode, the timed delay start-up sequence will be initiated during each start-up, so premature shut-downs or shut-downs for brief time periods (less than 30-minute durations) should be avoided. During these periods, simply leave the system on with the gas flow switch off.

The following procedure is suggested for routine system shut-down.

1. Set +25°C on the TEMPERATURE SET switch which is initiated during system start-up.
2. Command the system to go to +25°C. Wait for an "AT TEMP" indication before depressing the POWER switch.

APPENDIX E
SERVICE AND SALES REPRESENTATIVES

E-1 INTRODUCTION

This section provides a listing of Service and Sales Representatives. If your area is not covered, direct your inquiries to the factory as follows;

Sales

Temptronic Corporation
55 Chapel Street
Newton, MA 02158
U.S.A.

Tel. (617) 969-2501
Telex 200-119 TEMP UR

Service Telephone;

1-800-558-5080 Customers outside Massachusetts
1-(617)-965-4145 Customers within Massachusetts

NOTE These numbers are designated Service lines only and cannot be transfered to any other departments in Temptronic. The Corporate main number shown above should be used for all non-service related calls.

Telex;

number 211938; answer back SERVSUR

When calling for assistance, have the system model, serial, and code (if any) numbers available. These numbers can be found on the tag affixed to the back panel of either the MICROPROCESSOR or POWER CONTROLLERS.

E-2 SERVICE REPRESENTATIVES

Temptronic Corporation has established service centers throughout the world.

E-2.1 DOMESTIC SERVICE CENTERS

Arizona:	Allen Associates 7114 East Earll Drive Scottsdale, AZ 85251	Mr. Myron McKenzie
California: (Northern)	Econoscope 1010 Morse Avenue #5 Sunnyvale, CA 94086	Mr. Dennis Amiot
California: (Southern)	Ultimate Low, Inc. 1321 Calle Valle, Unit H San Clemente, CA 92672	Mr. Philip McSherry
Colorado:	Alpha Heating & A.C. 40-A Mount View Lane Colorado Springs, CO 80907	Mr. Roger Dockum Mr. Keith Kummerfeldt
Washington:	Elliot Bay refrigeration, Inc. 6353 6th Avenue South Seattle, WA 98108	Mr. Randall Sheppard
Florida:	Westbrook A.C. & Plumbing, Inc. P.O. Box 5459 Orlando, FL 32855	Mr. Edward O'Brien Mr. Robert Weathers
Ship To:	429N. Orange Blossom Trail Orlando, FL 32805	
Minnesota:	Jallen Refrigeration Service 7345 10th Avenue South Richfield, MN 55423	Mr. Rey Jallen
Texas:	Tinker Refrigeration P.O. Box 957	Mr. David Bell
Ship To:	112 North Henrietta/Suite "A" Lewisville, TX 75067	

E-2.2 EXPORT SERVICE CENTERS

Service is provided by/through each of the Sales Organizations representing those areas outside North America, refer to Section E-1.2.2.

E-3 SALES REPRESENTATIVES

Currently, Temptronic Corporation has established 32 Sales Representatives throughout the world.

E-3.1 DOMESTIC SALES REPRESENTATIVES

TERRITORY	ADDRESS	TELEPHONE
Arizona	Allen Associates 7114 Earll Drive Scottsdale, Az 85251	(602) 994-1305
New Mexico	Allen Associates P.O. Box 156 Alburquerque, NM 87103	(505) 345-4245
Texas (SW)	Alphatech, Inc. P.O. Box 15564 Austin, TX 78761	(512) 458-9179
(NW) Texas Oklahoma	Alphatech, Inc. 1807 Elmhurst Arlington, TX 76012	(817) 265-8455
Virginia	ARA Electronics of VA, Inc. 1710 Chadwick Drive Richmond, VA 23229	(804) 285-9309
Maryland Washington D.C.	ARA Electronics of VA, Inc. 610 Main Street P.O. Box 666 Laurel, MD 20707	(301) 953-1733
Indiana Wisconsin	AW, Inc. 3717 South Reed Road Kokomo, IN 46902	(317) 453-7671
Illinois	AW, Inc. 929 Waverly Elgin, IL 60120	(312) 894-7505

California	Comtronics, Inc. 3034 Lawrence Expressway Santa Clara, CA 95051	(408) 773-9800
Minnesota N & S Dakota	Dytec-North, Inc. 1821 University Avenue Suite 173S St. Paul, MN 55104	(612) 645-5816
Canada Except British Columbia	Giga-tron Associates 7 Slack Road (Suite 205) Ottawa, Ontario K2G OB7 Canada	(613) 225-4090
E. Pennsylvania S. New Jersey Delaware	Harry Nash Associates 652 Whitehead Road P.O. Box 5625 Trenton, NJ 08638	(609) 394-0900
Kansas Nebraska	Midtec Associates, Inc. 7702 Mize Road DeSoto, KS 66018	(913) 441-6565
Missouri Iowa	Midtec Associates, Inc. 100 Progress Parkway Suite 219 St. Louis, MO 63043	(314) 837-5200
Florida Georgia Alabama, Tennessee N & S Carolina	PSA, Inc. 2112 South Congress Avenue Suite 207 West Palm Beach, FL 33406	(305) 689-0575
N. New Jersey Long Island Hudson Valley Metropolitan NY	RMC Associates 8 Carriage Lane New City, NY 10956	(914) 634-0054
Upstate New York	Scientific Devices of New York, Inc. 122 Amsden Drive Rochester, NY 14623	(716) 334-2445
Southern Idaho Utah	Equipment Technology P.O. Box 970 8050 South 1300 West West Jordan, UT 84084	(801) 561-0222
Colorado	Equipment Technology 1898 Flatiron Court Boulder, CO 80301	(303) 444-0954

Washington NW Idaho British Columbia Oregon	System Specialists, Inc. 8229 44th Avenue West Suite A Mukilteo, WA 98275	(206) 355-0404
N. Ohio W. Pennsylvania	Technical Sales Associates 1938 Bromton Drive Lyndhurst, OH 44124	(216) 461-0826
West Virginia S. Ohio Kentucky	Technical Sales Associates Talbott Tower Suite 217 Dayton, OH 45402	(513) 222-1892
Michigan	Technical Sales Associates 4417 South Commerce Union Lake, MI 48085	(313) 363-1427
Connecticut Maine, Vermont Massachusetts New Hampshire Rhode Island	Tec Systems 80 Boylston Street Room 359 Boston, MA 02116	(617) 834-4663

E-3.2 EXPORT SALES REPRESENTATIVES

TERRITORY	ADDRESS	TELEPHONE
Belgium Luxemburg Netherlands Sweden Denmark Norway	Electronic Instruments NV-SA Rue Dries Straat 167 1200 Brussels Belgium	Tel:02/770 55 00 or 02/770 65 38 Tlx: 846 22747 (SIN B)
India	Electronics Continental Chinnappa Mansion (Post Bag 330) West Park Road, 8th Cross Malleswaram Bangalore 560 003 India	Tel:366665 Tlx:953 08458256 (ECEE IN)
Israel, Egypt Africa	Elentech Ltd. Segal International Bldg. Box 8367 24 Ben Maimon Jerusalem 91083 Israel	Tel:(02)410-140 Tlx:922 26144 ext. 7734 (26144 BXJM IL)

Italy	Elind Via Torino, 30 20063-CERNUSCO S/N (MI) Italy	Tel:(02)92.37.212 Tlx:843 331113 (331113 Elind 1)
Germany (East and West) Albania, Austria, Bulgaria, Hungary, Poland, Czechoslovakia, Romania, USSR, Yugoslavia	GSTmbh Goethestr. 21/4 Stock D-8000 Muenchen 2 West Germany	Tel:089/597511 Tlx:841 5216226 (GST D)
Japan	Hakuto Company Ltd. C.P.O. Box 25 Tokyo 100-91 Japan	Tel:03-341-2611 Tlx:781 22912 (BRAPAN A J22912)
Finland	Instrumentium Elektroniikka P.O.B. 64 SF-02631 ESPOO 63 Finland	Tel:358 5281 Tlx:857 12426
South Korea	Kye Poong Trading Co. Room 702,Il Yang Building #62, Doneui-Dong Chongro-ku C.P.O. Box 4653 Seoul, Korea	Tel:742-9664/5 Tlx:K28742
Hong Kong Phillipines Thailand	Lou Rauscher Associates Room 1122 Ocean Centre 5 Canton Road Tsim Sha Tsui, Kowloon GPO Box 11794 Hong Kong	Tel:3-689179/79 Tlx:780 55183 (Laura HX) Cable:LOURAUSCHR
Taiwan	Lumax International Corp. Limited 10th Floor 207, Tun Hwa N. Road Taipei, Taiwan R.O.C.	Tel:(02)7155 976 Tlx:22607
France	MB Electonique 606 Rue Fourny, B.P. No. 31 Zi-Centre 78530 Buc, France	Tel:956.81.31 Tlx:842 695414 (MB 695414F)
Australia	Teknis Philips Crescent Hendon, South Australia	Tel:Adelaide (08) 268 6122 Tlx:AA 88841

Great Britain (including England, Scotland, and Wales) Ireland	Test Reliability Limited P.O. Box 20 Petersfield Hants GU32 3JQ England.	Tel:(0730) 65412 Tlx: 851 869468 TRL G
Switzerland	W. Stolz AG Tafernstrasse 15 5405 Baden-Dahil Switzerland	Tel:41 568 71151 Tlx:845 54070

THERMOTRON®
A Venturedyne Ltd., Company
Product Support Operations
291 Kollen Park Drive
Holland, MI 49423

Dear Customer,

You made a great choice in the purchase of your new Thermotron test equipment! With proper maintenance, you can anticipate years of reliable use.

Thermotron has a World Wide Product Support Team, fully trained to maintain your environmental test equipment. It is important the preventive maintenance inspections are executed at the recommended intervals. Thermotron offers preventive maintenance as part of our total service program. Along with our preventive maintenance, we also provide on-site, certified calibration service.

If we can be of any help to you, your Thermotron Product Support Team awaits your call at (616) 392-6550 between 8:00 a.m. and 4:30 p.m. Eastern Standard Time.

Sincerely,

Ronald L. Wiley
Service Manager
Midwest and West Coast Operations

Sincerely,

Richard A. Spencer
Service Manager
East Coast and Southern Operations

ACCREDITED
Certificate No. 1917.01

ASR ANAB
ISO 9001: 2000 Registered

THERMOTRON®

If you need technical assistance troubleshooting problems with your Thermotron environmental test chamber, please contact the Thermotron Technical Liaison office at (616) 392-6550 between 8:00 a.m. and 4:30 p.m. Eastern Standard Time.

ThermoTrak II

ThermoTrak II software, with its innovative capabilities, makes test chamber control easier and more efficient than ever before. Utilizing input from engineers around the world, ThermoTrak II is designed to simplify lab management and improve performance. Simply, ThermoTrak II saves you time and money, and increases productivity.

Features:

- Can run several tests simultaneously because of its ability to link multiple chamber controllers to a single PC.
- Includes tracking and recording features, reducing the amount of time spent gathering data.
- Advanced automated features that allow you to eliminate manual tasks and improve testing productivity.

ThermoTrak II software is a simple and easy download from the Thermotron web site. Follow the five simple steps below to download and install ThermoTrak II:

1. Open your web browser and navigate to:

   http://www.thermotron.com/thermotrak/software/thermotrak.php

2. Begin downloading the software by right-clicking on the file name and choosing 'Save Target As...'
3. Open the file using zip-capable software such as WinZip.
4. For further instructions, view the "readme" file using Microsoft Notepad.
5. For your ThermoTrak II serial number, enter the serial number of your chamber as well as the two-digit number of the month you received your chamber. For example, if your chamber serial number is 60354 and you received your chamber in September, your ThermoTrak II serial number will be 6035409. Please record this serial number, as you will need it to obtain additional software updates.

ThermoTrak II Software Specifications	
Thermotron controllers supported	2800, 3800, 4800, 6850, 7800, 7825, 8200, 8800, 8825
Interface capabilities	RS-232, RS-485, GPIB, TCP/IP (Ethernet)
Maximum number of controllers	Up to 32
Maximum control channels	4 (controller-dependent)
Data log/graph resolution	Adjustable per controller: 2 to 3,600 second increments
Maximum graph/data log display readings	32,000 per logged item
Maximum data log file	Limited only by hard drive space
Operating system required	Microsoft Windows Vista, XP, 2000, ME, NT 4.0, 98, 95

Profile Map

The programmer/controller operates your chamber using profiles. Each profile consists of a group of intervals. In each interval the controller cycles the chamber toward a final temperature and/or other process variable in a specified amount of time. Once the interval is completed, the controller either transitions to the next interval or loops back to an earlier interval. Once a profile is entered into memory it can be run immediately, or it can be set up for a delayed start.

Using a profile map to create your profile can minimize programming errors. A blank profile map and a sample profile containing ten intervals are attached. Fill out your profile map like the sample profile. Be sure that when a variable changes (such as on or off, temperature change, etc.) you go to a new interval. Once you have completed your profile map you are ready to begin programming your Thermotron programmer/controller.

The profile map fields are defined below. **NOTE**: Some fields may not apply to your chamber or programmer/controller, for additional information, refer to your manuals.

NOTE: On 3800/7800/8800 programmer/controllers, the humidity option **MUST** disabled, setting the humidity set point to zero is not sufficient.

Definitions

Interval #	The number of the programmed period during which the chamber operates under a specified set of conditions.
Initial Value	The starting temperature or other process variable of an interval. After the first interval of a profile, the initial value is always the final value of the previous interval and cannot be edited.
Final Value	The ending temperature or other process variable the chamber is to reach during an interval.
Deviation	The difference between the **process variable** (actual test space or product condition) and the **set point** (assigned test space or product condition).
Ramp Rate	The speed (in degrees per minute) at which the programmer/controller cycles a process variable to a new set point.
Options	(*3800/7800/8800 programmer/controllers only*)The optional functions (such as product temperature control, humidity, or dry air purge) enabled during the interval.
Auxiliaries	Auxiliary relays operate additional systems or circuits. You can turn these outputs on or off at the beginning of each interval.
Refrig Mode	(*SE-Series chambers only*) One of three refrigeration system configurations (single stage, cascade, and power saver) that can be selected for each interval.
Time	The duration of the interval.
G-Soak	(*3800/8800 programmer/controllers only*) A g-soak (guaranteed soak) interval will immediately set the set point equal to the interval's final value and then wait until the process variable is within the +/- deviation band of the final value. Once the process variable is within the deviation band, the interval time will begin counting down. For multiple channel programs, all non-zero deviation bands must be satisfied before the interval time will begin counting down. **NOTE:** 2800/4800/6800/7800 programmer/controllers use zero time intervals.
Next Interval	The interval to transition to after completion of the current interval.
# of Loops	The total number of times the programmed loop will be executed.
Param Group	(*7800 and 8800 programmer/controllers only*) A selectable set of control parameters used by the programmer/controller to tune the performance of each active channel to a specific set of conditions. Different parameter groups may be useful for different control situations. You can select a parameter group for each interval.

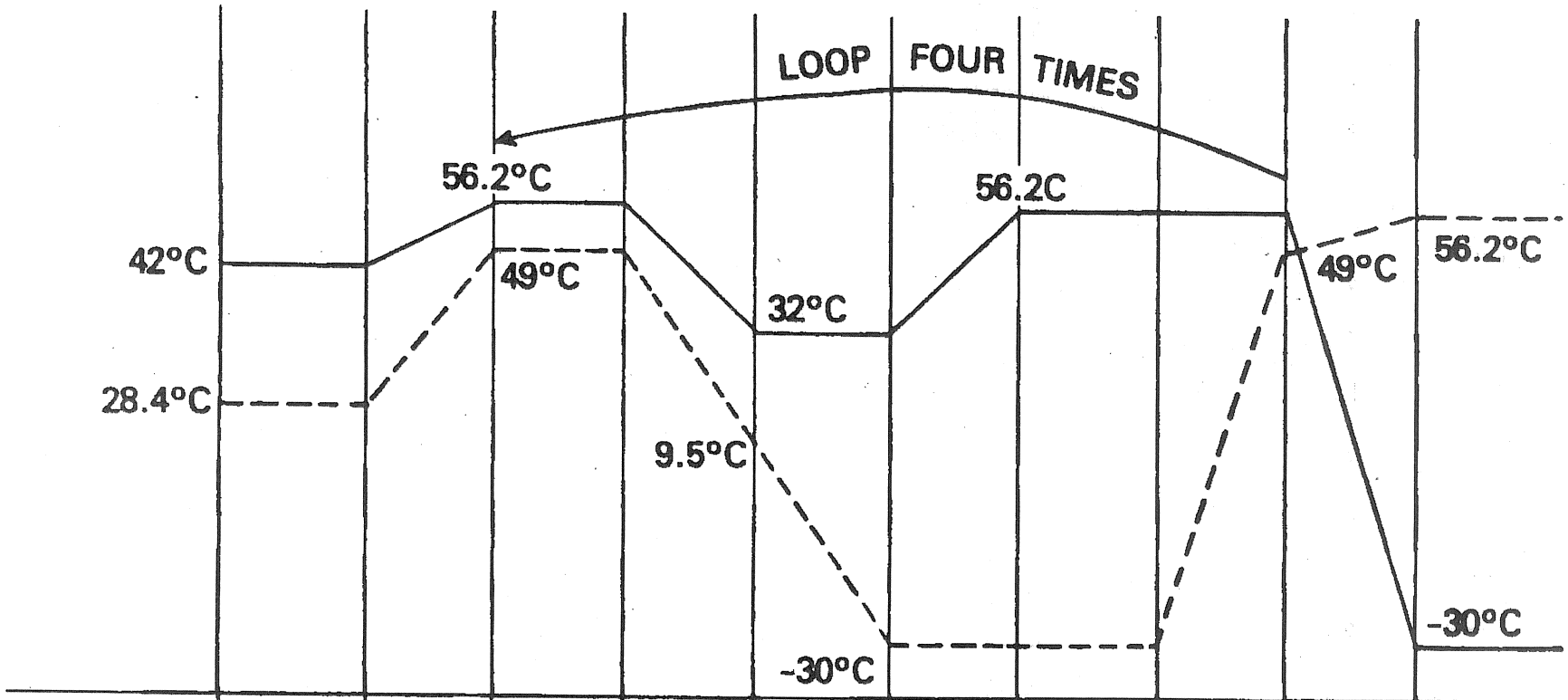

Interval Number	1	2	3	4	5	6	7	8	9	10
Interval Time	1H, 20M, 30S	20M	2H	35M	30M	35M	4H	28M	1H	1H
Auxiliaries On	1, 4, 8	—	1, 2, 7	—	—	—	1, 2, 7	—	—	—
Deviation Limits Hi	+1°C	+2°C	+1°C	+2°C	+2°C	+1°C	+2°C	+2°C	+2°C	+2°C
Deviation Limits Lo	-1°C	-1°C	-1°C	-1°C	-1°C	-1°C	-1°C	-1°C	-1°C	-1°C

SETPOINT

INTERVAL

Interval #										
Initial Value										
Final Value										
Deviation										
Ramp Rate										
Options										
Auxiliaries										
Refrig Mode										
Time										
G-Soak										
Next Interval										
# of Loops										
Param Group										

Thermotron Chamber Maintenance Log

This log will help you keep accurate maintenance records. Use it to record when maintenance was performed, the condition of the chamber at the time, and individual characteristics of the chamber. The log will help Thermotron Field Service Engineers prevent avoidable down time due to equipment failure. Please be sure to fill out the log each time maintenance is performed.

WARNING: Do not attempt to perform electrical or refrigeration work if you are not qualified. The chamber manual is not a substitute for electrical or refrigeration training.

NOTE: Based on your operational Profile, your maintenance frequency may be different than the recommended guidelines in this log. Please adjust your maintenance frequency appropriately.

Thermotron Maintenance Log: Start-Up Date: Chamber S/N:

Frequency	Component	Reading	Date Checked						
Low Stage System									
At least once a month	Standby pressure	PSIG[1]							
Quarterly	Oil pressure	PSIG[1]							
Quarterly	Sightglass oil level	% full[2]							
Quarterly	Compressor	Amperage							
Quarterly	High/low pressure switch	Verify operation[2]							
Quarterly	Discharge temperature switch	Verify operation[2]							
Quarterly	Discharge temp: controlling	Temperature							
Quarterly	Discharge temp: pull-down	Temperature							
Quarterly	Oil acidity	Low/High							
Quarterly	Leak check	Leak/No leak							
Quarterly	Frostback	None/Light/Heavy							
Quarterly	Check water valves	Verify setting							
High Stage System									
At least once a month	Sightglass charge indication	Clear/Bubbles							
Quarterly	Oil pressure	PSIG[1]							
Quarterly	Sightglass oil level	% full[2]							
Quarterly	Moisture indicator color	Green/Yellow							
Quarterly	Water-cooled condenser ΔT value								
Quarterly	Compressor	Amperage							
Quarterly	High/low pressure switch	Verify operation							
Quarterly	Discharge temperature switch	Verify operation							
Quarterly	Discharge temp: controlling	Temperature							
Quarterly	Discharge temp: pull-down	Temperature							
Quarterly	Crankcase heater	Amperage							
Annually	Oil acidity	Acid/ No acid							
Quarterly	Leak check	Leak/No leak							
Quarterly	Frostback	None/Light/Heavy							
Quarterly	Check water valves	Verify setting							

1. PSIG = Pounds per square inch gauge
2. Refer to the specific product manual(s) in the OEM section of your chamber manual

Frequency	Component	Reading	Date Checked						
Air Cooled Condenser									
Weekly	Inspect visually	Clean/Dirty							
As needed	Clean condenser	Yes/No							
Quarterly	Fan motor rotation	CW/CCW[3]							
Quarterly	Fan motor	Amperage							
Thermotrimmer									
Quarterly	Sightglass charge indication	Clear/Bubbles							
Quarterly	Pressure Switch	Verify Operation							
Quarterly	Compressor	Amperage							
Quarterly	Leak Check	Leak/ No Leak							
Quarterly	Moisture indicator color	Green/Yellow							
Humidity System									
Weekly	Inspect wet bulb wick	Clean/Dirty							
As needed	Replace wet bulb wick	Yes/No							
Weekly	Check vapor generator tank float	Good/Bad							
As needed	Adjust vapor generator tank float	Yes/No							
Weekly	Inspect demineralizer cartridge	Good/Bad							
As needed	Replace demineralizer cartridge	Yes/No							
Quarterly	Flush tank, lines, and screens	Yes/No							
Quarterly	High temperature limit switch	Verify operation							
Quarterly	Vapor generator heater	Amperage							
Quarterly	Check Atomizer nozzle	Good/Bad							
As needed	Clean Atomizer nozzle	Yes/No							
Semi-annually	Check electronic humidity probe	Verify calibration							
Dry Air Purge									
Monthly	Drain coalescing filter	Yes/No							

3. CW/CCW = Clockwise or counterclockwise

Frequency	Component	Reading	Date Checked						
Electrical Equipment									
Quarterly	Test ground fault circuit interrupters	Yes/No							
Quarterly	Chamber heater	Amperage							
Quarterly	High limit switch	Verify operation							
Quarterly	Control circuitry	Voltage							
Quarterly	Visually inspect contactors	Yes/No							
Quarterly	Tighten Connectors	Yes/No							
Quarterly	Visually inspect line straps	Yes/No							
Quarterly	Check timers	Verify operation							
Quarterly	Chamber air circulator	Amperage							
Semi-annually	Chamber air circulator rotation direction	CW/CCW[3]							
Instrumentation									
Customer Specified	Programmer/controller (calibrate if req'd)	Verify calibration							
	Therm-Alarm® (calibrate if required)	Verify calibration							
	Chart recorder (calibrate if required)	Verify calibration							
Miscellaneous									
Semi-annually	Check all seals and gaskets	Good/Bad							
Thermal Shock (ATS) Transfer Basket System									
Weekly	Fill line oiler [Horizontal chambers]	High/Low/Okay							
Quarterly	Check transfer fluid level [Vertical chambers] (refer to manual)	High/Low/Okay							
Altitude System									
Every day of use	Vacuum pump sightglass oil level	% full[2]							
Weekly	Vacuum pump sightglass oil color	Color: Light/Dark/Milky							
Quarterly	Circulator motor fluid level	Fluid in cup							
Quarterly	Visually check seals, doors ports, etc.	Verify seal							
Quarterly	Vacuum Pump	Amperage							

2. Refer to the specific product manual(s) in the OEM section of your chamber manual
3. CW/CCW = Clockwise or counterclockwise

THERMOTRON

TEMPERATURE CONVERSION CHART Fahrenheit and Celsius

—459.4 TO —70			—69 TO 0			1 TO 69			70 TO 139			140 TO 290			300 TO 1000		
C.	*	F.	C.	*	F.	C.	*	F.	C.	*	F.	C.	*	F.	C.	*	F.
—273	—459.4		—56.1	—69	—92.2	—17.2	1	33.8	21.1	70	158.0	60.0	140	284.0	149	300	572
—268	—450		—55.5	—68	—90.4	—16.7	2	35.6	21.7	71	159.8	60.6	141	285.8	154	310	590
—262	—440		—55.0	—67	—88.6	—16.1	3	37.4	22.2	72	161.6	61.1	142	287.6	160	320	608
—257	—430		—54.4	—66	—86.8	—15.6	4	39.2	22.8	73	163.4	61.7	143	289.4	166	330	626
—251	—420		—53.9	—65	—85.0	—15.0	5	41.0	23.3	74	165.2	62.2	144	291.2	171	340	644
—246	—410		—53.3	—64	—83.2	—14.4	6	42.8	23.9	75	167.0	62.8	145	293.0	177	350	662
—240	—400		—52.8	—63	—81.4	—13.9	7	44.6	24.4	76	168.8	63.3	146	294.8	182	360	680
			—52.2	—62	—79.6	—13.3	8	46.4	25.0	77	170.6	63.9	147	296.6	188	370	698
			—51.7	—61	—77.8	—12.8	9	48.2	25.6	78	172.4	64.4	148	298.4	193	380	716
			—51.1	—60	—76.0				26.1	79	174.2	65.0	149	300.2	199	390	734
—234	—390		—50.6	—59	—74.2	—12.2	10	50.0	26.7	80	176.0	65.6	150	302.0	204	400	752
—229	—380		—50.0	—58	—72.4	—11.7	11	51.8	27.2	81	177.8	66.1	151	303.8	210	410	770
—223	—370		—49.5	—57	—70.6	—11.1	12	53.6	27.8	82	179.6	66.7	152	305.6	216	420	788
—218	—360		—48.9	—56	—68.8	—10.6	13	55.4	28.3	83	181.4	67.2	153	307.4	221	430	806
—212	—350		—48.4	—55	—67.0	—10.0	14	57.2	28.9	84	183.2	67.8	154	309.2	227	440	824
—207	—340		—47.8	—54	—65.2	—9.44	15	59.0	29.4	85	185.0	68.3	155	311.0	232	450	842
—201	—330		—47.3	—53	—63.4	—8.89	16	60.8	30.0	86	186.8	68.9	156	312.8	238	460	860
—196	—320		—46.7	—52	—61.6	—8.33	17	62.6	30.6	87	188.6	69.4	157	314.6	243	470	878
—190	—310		—46.2	—51	—59.8	—7.78	18	64.4	31.1	88	190.4	70.0	158	316.4	249	480	896
—184	—300		—45.6	—50	—58.0	—7.22	19	66.2	31.7	89	192.2	70.6	159	318.2	254	490	914
—179	—290		—45.0	—49	—56.2	—6.67	20	68.0	32.2	90	194.0	71.1	160	320.0	260	500	932
—173	—280		—44.4	—48	—54.4	—6.11	21	69.8	32.8	91	195.8	71.7	161	321.8	266	510	950
—169	—273	—459.4	—43.9	—47	—52.6	—5.56	22	71.6	33.3	92	197.6	72.2	162	323.6	271	520	968
—168	—270	—454	—43.3	—46	—50.8	—5.00	23	73.4	33.9	93	199.4	72.8	163	325.4	277	530	986
—162	—260	—436	—42.8	—45	—49.0	—4.44	24	75.2	34.4	94	201.2	73.3	164	327.2	282	540	1004
—157	—250	—418	—42.2	—44	—47.2	—3.89	25	77.0	35.0	95	203.0	73.9	165	329.0	288	550	1022
—151	—240	—400	—41.7	—43	—45.4	—3.33	26	78.8	35.6	96	204.8	74.4	166	330.8	293	560	1040
—146	—230	—382	—41.1	—42	—43.6	—2.78	27	80.6	36.1	97	206.6	75.0	167	332.6	299	570	1058
—140	—220	—364	—40.6	—41	—41.8	—2.22	28	82.4	36.7	98	208.4	75.6	168	334.4	304	580	1076
—134	—210	—346	—40.0	—40	—40.0	—1.67	29	84.2	37.2	99	210.2	76.1	169	336.2	310	590	1094
—129	—200	—328															
—123	—190	—310	—39.4	—39	—38.2	—1.11	30	86.0	37.8	100	212.0	76.7	170	338.0	316	600	1112
—118	—180	—292	—38.8	—38	—36.4	—0.56	31	87.8	38.3	101	213.8	77.2	171	339.8	321	610	1130
—112	—170	—274	—38.3	—37	—34.6	0	32	89.6	38.9	102	215.6	77.8	172	341.6	327	620	1148
—107	—160	—256	—37.8	—36	—32.8	0.56	33	91.4	39.4	103	217.4	78.3	173	343.4	332	630	1166
—101	—150	—238	—37.2	—35	—31.0	1.11	34	93.2	40.0	104	219.2	78.9	174	345.2	338	640	1184
—95.6	—140	—220	—36.6	—34	—29.2	1.67	35	95.0	40.6	105	221.0	79.4	175	347.0	343	650	1202
—90.0	—130	—202	—36.1	—33	—27.4	2.22	36	96.8	41.1	106	222.8	80.0	176	348.8	349	660	1220
—84.4	—120	—184	—35.5	—32	—25.6	2.78	37	98.6	41.7	107	224.6	80.6	177	350.6	354	670	1238
—78.9	—110	—166	—35.0	—31	—23.8	3.33	38	100.4	42.2	108	226.4	81.1	178	352.4	360	680	1256
—73.3	—100	—148	—34.4	—30	—22.0	3.89	39	102.2	42.8	109	228.2	81.7	179	354.2	366	690	1274
—72.8	—99	—146.2	—33.9	—29	—20.2	4.44	40	104.0	43.3	110	230.0	82.2	180	356.0	371	700	1292
—72.2	—98	—144.4	—33.3	—28	—18.4	5.00	41	105.8	43.9	111	231.8	82.8	181	357.8	377	710	1310
—71.7	—97	—142.6	—32.8	—27	—16.6	5.56	42	107.6	44.4	112	233.6	83.3	182	359.6	382	720	1328
—71.1	—96	—140.8	—32.2	—26	—14.8	6.11	43	109.4	45.0	113	235.4	83.9	183	361.4	388	730	1346
—70.6	—95	—139.0	—31.7	—25	—13.0	6.67	44	111.2	45.6	114	237.2	84.4	184	363.2	393	740	1364
—70.0	—94	—137.2	—31.1	—24	—11.2	7.22	45	113.0	46.1	115	239.0	85.0	185	365.0	399	750	1382
—69.5	—93	—135.4	—30.6	—23	—9.4	7.78	46	114.8	46.7	116	240.8	85.6	186	366.8	404	760	1400
—68.9	—92	—133.6	—30.0	—22	—7.6	8.33	47	116.6	47.2	117	242.6	86.1	187	368.6	410	770	1418
—68.4	—91	—131.8	—29.5	—21	—5.8	8.89	48	118.4	47.8	118	244.4	86.7	188	370.4	416	780	1436
—67.8	—90	—130.0	—28.9	—20	—4.0	9.44	49	120.2	48.3	119	246.2	87.2	189	372.2	421	790	1454
—67.2	—89	—128.2	—28.3	—19	—2.2	10.0	50	122.0	48.9	120	248.0	87.8	190	374.0	427	800	1472
—66.6	—88	—126.4	—27.7	—18	—0.4	10.6	51	123.8	49.4	121	249.8	88.3	191	375.8	432	810	1490
—66.1	—87	—124.6	—27.2	—17	1.4	11.1	52	125.6	50.0	122	251.6	88.9	192	377.6	438	820	1508
—65.5	—86	—122.8	—26.6	—16	3.2	11.7	53	127.4	50.6	123	253.4	89.4	193	379.4	443	830	1526
—65.0	—85	—121.0	—26.1	—15	5.0	12.2	54	129.2	51.1	124	255.2	90.0	194	381.2	449	840	1544
—64.4	—84	—119.2	—25.5	—14	6.8	12.8	55	131.0	51.7	125	257.0	90.6	195	383.0	454	850	1562
—63.9	—83	—117.4	—25.0	—13	8.6	13.3	56	132.8	52.2	126	258.8	91.1	196	384.8	460	860	1580
—63.3	—82	—115.6	—24.4	—12	10.4	13.9	57	134.6	52.8	127	260.6	91.7	197	386.6	466	870	1598
—62.8	—81	—113.8	—23.9	—11	12.2	14.4	58	136.4	53.3	128	262.4	92.2	198	388.4	471	880	1616
—62.2	—80	—112.0	—23.3	—10	14.0	15.0	59	138.2	53.9	129	264.2	92.8	199	390.2	477	890	1634
—61.7	—79	—110.2	—22.8	—9	15.8	15.6	60	140.0	54.4	130	266.0	93.3	200	392	482	900	1652
—61.1	—78	—108.4	—22.2	—8	17.6	16.1	61	141.8	55.0	131	267.8	98.9	210	410	488	910	1670
—60.6	—77	—106.6	—21.7	—7	19.4	16.7	62	143.6	55.6	132	269.6	100	212	413	493	920	1688
—60.0	—76	—104.8	—21.1	—6	21.2	17.2	63	145.4	56.1	133	271.4	104	220	428	499	930	1706
—59.5	—75	—103.0	—20.6	—5	23.0	17.8	64	147.2	56.7	134	273.2	110	230	446	504	940	1724
—58.9	—74	—101.2	—20.0	—4	24.8	18.3	65	149.0	57.2	135	275.0	116	240	464	510	950	1742
—58.4	—73	—99.4	—19.5	—3	26.6	18.9	66	150.8	57.8	136	276.8	121	250	482	516	960	1760
—57.8	—72	—97.6	—18.9	—2	28.4	19.4	67	152.6	58.3	137	278.6	127	260	500	521	970	1778
—57.3	—71	—95.8	—18.4	—1	30.2	20.0	68	154.4	58.9	138	280.4	132	270	518	527	980	1796
—56.7	—70	—94.0	—17.8	0	32.0	20.6	69	156.2	59.4	139	282.2	138	280	536	532	990	1814
												143	290	554	538	1000	1832

INTERPOLATION VALUES

In the center column, find the temperature to be converted. The equivalent temperature is in the left column, if converting to Celsius, and in the right column, if converting to Fahrenheit.

C	*	F	C	*	F
0.56	1	1.8	3.33	6	10.8
1.11	2	3.6	3.89	7	12.6
1.67	3	5.4	4.44	8	14.4
2.22	4	7.2	5.00	9	16.2
2.78	5	9.0	5.56	10	18.0

TEMPERATURE CONVERSION FORMULAS

Degrees Celsius (formerly Centigrade) C		Degrees Fahrenheit—F		Degrees Réaumur—R	
C + 273.15	= K Kelvin	F + 459.67	= Rankine	R × 5/4	= C Celsius
(C × 9/5) + 32	= F Fahrenheit	(F − 32) 5/9	= C Celsius	(R × 9/4) + 32	= F Fahrenheit
C × 4/5	= R Réaumur	(F − 32) × 4/9	= R Réaumur		

World Headquarters: Kollen Park Drive, Holland, MI 49423, Phone: (616) 392-1492, TWX 810-292-6164

• Environmental Test Chambers • Electrodynamic Vibration Systems • Burn-in Facilities • Instrumentation • Combined Environment Testing
• Worldwide Product Support/Field Service • Installation and Commissioning • Temperature Cycling

THERMOTRON®

Resistance – Temperature Table for Platinum Resistance Thermometer Elements (100 ohms at 0°C/+32°F)

Degussa sensors (glass)		YSI-Sostman 4150 and 4100 series sensors (metal)	
Temperature (°C/°F)	Resistance (ohms)*	Temperature (°C/°F)	Resistance (ohms)*
+380°C / +716°F	240.15	+380°C / +716°F	242.66
+360°C / +680°F	233.19	+360°C / +680°F	235.59
+340°C / +644°F	226.18	+340°C / +644°F	228.45
+320°C / +608°F	219.13	+320°C / +608°F	221.26
+300°C / +572°F	212.03	+300°C / +572°F	214.06
+280°C / +536°F	204.88	+280°C / +536°F	206.76
+260°C / +500°F	197.70	+260°C / +500°F	199.45
+240°C / +464°F	190.46	+240°C / +464°F	192.08
+220°C / +428°F	183.17	+220°C / +428°F	184.65
+200°C / +392°F	175.84	+200°C / +392°F	177.23
+180°C / +356°F	168.47	+180°C / +356°F	169.68
+160°C / +320°F	161.04	+160°C / +320°F	162.13
+140°C / +284°F	153.57	+140°C / +284°F	154.53
+120°C / +248°F	146.06	+120°C / +248°F	146.87
+100°C / +212°F	138.50	+100°C / +212°F	139.20
+80°C / +176°F	130.89	+80°C / +176°F	131.42
+60°C / +140°F	123.24	+60°C / +140°F	123.64
+40°C / +104°F	115.54	+40°C / +104°F	115.80
+20°C / +68°F	107.79	+20°C / +68°F	107.90
0°C / +32°F	100.00	0°C / +32°F	100.00
-17.8°C / 0°F	93.01	-17.8°C / 0°F	91.98
-28.9°C / -20°F	88.61	-28.9°C / -20°F	83.96
-40°C / -40°F	84.21	-40°C / -40°F	75.75
-51.1°C / -60°F	79.81	-51.1°C / -60°F	75.01
-62.2°C / -80°F	75.39	-62.2°C / -80°F	73.64
-73.3°C / -100°F	70.95	-73.3°C / -100°F	70.45

* For 200 ohm platinum elements, multiply the resistance values by 2.
For 500 ohm platinum elements, multiply the resistance values by 5.

THERMOTRON®

Refrigerant Temperature-Pressure Chart

(shaded figures = inches of mercury vacuum)

SAT. TEMP °F	R-502 PRESSURE PSIG	R-402A PRESSURE PSIG	R-404A PRESSURE PSIG	R-507 PRESSURE PSIG	R-22 PRESSURE PSIG	R-134a PRESSURE PSIG
-75	*15.1*	*14.0*	*14.9*	*14.6*	*18.5*	*24.9*
-70	*12.7*	*11.5*	*12.4*	*12.1*	*16.6*	*24.0*
-65	*10.1*	*8.8*	*9.7*	*9.2*	*14.4*	*22.9*
-60	*7.2*	*5.6*	*6.6*	*6.1*	*11.9*	*21.6*
-55	*3.9*	*2.1*	*3.1*	*2.5*	*9.0*	*20.2*
-50	*0.2*	1.9	0.4	0.7	*6.1*	*18.6*
-48	0.7	2.8	1.2	1.5	*4.8*	*17.9*
-46	1.5	3.7	2.0	2.4	*3.4*	*17.1*
-44	2.3	4.7	2.9	3.3	*1.9*	*16.3*
-42	3.2	5.7	3.9	4.2	*0.4*	*15.5*
-40	4.1	6.7	4.8	5.2	0.6	*14.7*
-38	5.1	7.8	5.8	6.2	1.4	*13.7*
-36	6.0	8.9	6.9	7.3	2.2	*12.8*
-34	7.0	10.1	7.9	8.4	3.1	*11.8*
-32	8.1	11.3	9.1	9.5	4.0	*10.8*
-30	9.2	12.5	10.2	10.7	4.9	*9.7*
-28	10.3	13.8	11.4	11.9	5.9	*8.6*
-26	11.5	15.1	12.7	13.2	6.9	*7.4*
-24	12.7	16.5	14.0	14.5	8.0	*6.2*
-22	14.0	18.0	15.3	15.8	9.1	*4.9*
-20	15.3	19.5	16.7	17.3	10.2	*3.6*
-18	16.7	21.0	18.1	18.7	11.4	*2.1*
-16	18.1	22.6	19.6	20.2	12.6	*0.7*
-14	19.5	24.2	21.1	21.8	13.9	0.4
-12	21.0	25.9	22.7	23.4	15.2	1.2
-10	22.6	27.7	24.3	25.1	16.5	2.0
-8	24.2	29.5	26.0	26.8	17.9	2.8
-6	25.8	31.4	27.8	28.6	19.4	3.7
-4	27.5	33.3	29,6	30.4	20.9	4.6
-2	29.3	35.3	31.4	32.3	22.4	5.6
0	31.1	37.4	33.4	34.3	24.0	6.5
2	32.9	39.5	35.3	36.3	25.7	7.5
4	34.9	41.7	37.4	38.4	27.4	8.6
6	36.9	44.0	39.5	40.5	29.1	9.7
8	38.9	46.3	41.7	42.7	31.0	10.8
10	41.0	48.7	43.9	45.0	32.8	12.0
15	46.5	55.0	49.8	51.0	37.8	15.1
20	52.5	61.7	56.1	57.4	43.1	18.4
25	58.8	69.0	62.9	64.3	48.8	22.1
30	65.6	76.7	70.2	71.7	54.9	26.1
35	72.8	85.0	78.0	79.6	61.5	30.4
40	80.5	93.8	86.3	88.0	68.5	35.0
45	88.7	103.2	95.1	96.9	76.1	40.2
50	97.4	113.1	104.5	106.5	84.1	45.4
55	106.6	123.8	114.6	116.6	92.6	51.4
60	116.4	135.0	125.2	127.3	101.6	57.4
65	126.7	146.9	136.5	138.8	111.3	64.2
70	137.6	159.5	148.5	150.8	121.4	71.1
75	149.1	172.8	161.1	163.6	132.6	78.9
80	161.2	186.9	174.5	177.1	143.7	86.7
85	174.0	201.7	188.6	191.4	156.0	95.5
90	187.4	217.3	203.5	206.4	168.4	104.3
95	201.4	233.8	219.2	222.3	182.2	113.9
100	216.2	251.1	235.7	239.0	196.0	124.1
105	231.7	269.2	253.1	256.6	211.2	134.9
110	247.9	288.3	271.4	275.1	226.4	146.3
115	264.9	308.3	290.6	294.6	243.2	158.4
120	282.7	329.3	310.7	315.1	260.0	171.1
125	301.3	351.3	331.8	336.6	278.5	183.9
130	320.8	374.2	354.0	359.2	297.0	196.6
135	341.2	398.3	377.1	382.7	317.2	209.3
140	362.6	423.4	401.4	407.9	337.4	222.0
145	384.9	449.7	426.8	434.0	359.6	234.7
150	408.4	477.0	453.3	461.4	381.7	247.5

SAT. TEMP °F	R-13 PRESSURE PSIG	R-23 PRESSURE PSIG	R-503 PRESSURE PSIG	R-508B PRESSURE PSIG
-140	*16.8*	*17.1*	*11.1*	*11.6*
-135	*14.3*	*14.5*	*7.6*	*7.9*
-130	*11.5*	*11.5*	*3.5*	*3.9*
-125	*8.2*	*8.0*	0.6	0.4
-120	*4.5*	*4.0*	3.1	3.0
-118	*2.9*	*2.2*	4.2	4.2
-116	*1.2*	*0.3*	5.4	5.3
-114	0.3	0.8	6.6	6.5
-112	1.2	1.8	7.9	7.7
-110	2.1	2.9	9.3	8.9
-108	3.1	4.0	10.7	10.5
-106	4.2	5.1	12.1	12.1
-104	5.3	6.4	13.7	13.7
-102	6.4	7.7	15.3	15.3
-100	7.6	9.0	16.9	16.9
-98	8.8	10.4	18.7	18.8
-96	10.1	11.9	20.5	20.7
-94	11.4	13.4	22.3	22.6
-92	12.8	15.1	24.3	24.5
-90	14.3	16.7	26.3	26.4
-88	15.8	18.5	28.4	28.7
-86	17.4	20.3	30.6	31.0
-84	19.0	22.2	32.9	33.3
-82	20.7	24.2	34.2	35.7
-80	22.5	26.3	37.7	38.0
-78	24.3	28.4	40.2	40.7
-76	26.2	30.7	42.8	43.5
-74	28.1	33.0	45.6	46.3
-72	30.2	35.4	48.4	49.0
-70	32.3	37.9	51.3	51.8
-68	34.4	40.5	54.4	55.1
-66	36.7	43.3	57.4	58.4
-64	39.0	46.1	60.6	61.6
-62	41.4	49.0	64.0	64.9
-60	43.9	52.0	67.3	68.2
-55	50.4	60.0	76.3	77.8
-50	57.5	68.7	86.1	87.4
-45	65.1	78.1	96.6	98.6
-40	73.3	88.3	107.8	109.8
-35	82.2	99.4	119.9	122.7
-30	91.6	111.3	132.8	135.6
-25	101.7	124.0	146.7	150.4
-20	112.5	137.8	161.4	165.2
-15	123.9	152.5	177.1	181.5
-10	136.1	168.2	193.9	198.8
-5	149.1	185.0	211.6	217.3
0	162.9	202.9	230.5	236.9
5	177.4	222.0	250.5	257.7
10	192.8	242.3	271.7	279.7
15	209.1	263.9	294.1	303.0
20	226.3	286.9	317.8	327.6
25	244.4	311.2	342.8	353.6
30	263.5	337.0	369.3	381.0
35	283.6	364.4	397.2	410.0
40	304.8	393.5	426.6	
45	327.1	425.2	457.5	
50	350.5	456.9	490.2	
55	375.1	492.6	524.5	
60	400.9	528.3	560.7	
65	428.2	568.5	598.7	
70	456.9	608.7		
75	487.2	653.5		
80	519.5			
83.9	546.6			

Important Safety Instructions

Before you operate this chamber, read these warnings:

- Do not try to do electrical or refrigeration work if you are not approved. This manual does not replace electrical or refrigeration training.
- Directly connect the chamber to a dedicated electrical circuit in accordance with local codes. Do not use an extension cord or power strip to connect the chamber to an electrical outlet. If the supplied power cable is too short, consult Thermotron Industries or a licensed electrician.
- Do not operate this chamber unless it is fully assembled.
- Be sure the area around the chamber is satisfactorily ventilated if the chamber has one of these systems:
    - Gaseous nitrogen (GN_2) purge system
    - Liquid nitrogen (LN_2) injection system
    - Pressurized carbon dioxide (CO_2) injection system

  Nitrogen and carbon dioxide gases displace oxygen, which can cause suffocation and death. You must dilute these gases with a sufficient quantity of breathable room air. To safely install and use these systems, obey the instructions on the gas containers and in this manual.
- Do not operate this chamber if volatile material is in the area.
- Do not put into the chamber material that can explode, burn, or give off poisonous fumes at high temperatures. Use this chamber only for tests on material that the chamber was made for.

  This chamber is not explosion-resistant. Open-coil heaters can cause fumes to explode, even at low temperatures. Death or injury can occur.

  Petroleum-based and chemical-based material also can cause damage to chamber components. This will void the warranty.
- If a chemical spill occurs inside the chamber, refer to the accidental release measures listed in the chemical's Material Safety Data Sheets.
- Before you start the chamber, be sure the chamber door is closed.
- Do not stop or remove power from the chamber until the chamber air is near room temperature or lower. If you stop or remove power from the chamber when the chamber air is hot, heat can continue to increase. This can cause damage to the heat links and other components.

- Before you open the chamber door at the end of a test:
  - ❑ Be sure the air in the chamber is near room temperature.
  - ❑ Be sure the circulator fan has stopped turning.
- Stay away from air, objects, or surfaces that are hot or cold. They can cause burns or frostbite.
- Do not keep the primary power disconnected longer than necessary. When the primary power is off, the pump-down system can not operate. As the temperature near the chamber becomes cooler, the pump-down system operates less frequently. The low-side compressor can then contain liquid refrigerant, which can cause damage to the compressor. Before you apply power to the chamber, be sure that the temperature of the compressor is at least +13°C (+55°F).
- Disconnect the primary power before you do electrical work on the chamber. The electrical system has dangerously high voltages that can kill you.
- Disconnect the primary power before you do work near parts that move. Do not remove guards or shields. Even when the chamber is off, fans and compressors can ALWAYS start when the primary power is connected.
- Do not put the machinery section at an angle of more than 45° without special instructions from Thermotron Industries.
- Keep this manual where it will be available to persons who use the chamber. This manual contains important safety data.

Read all the safety labels on the chamber:

- Red and white **DANGER** labels show risks that WILL immediately kill or injure you.
- Orange and black **WARNING** labels show risks that can kill or injure you.
- Yellow and black **CAUTION** labels show risks that can injure you or cause damage to products or property.
- Blue and white safety instruction labels are important reminders that you must read before you operate the chamber.
- Make sure that all warning labels stay attached to the chamber. You can buy new labels from Thermotron Industries.

THERMOTRON®

NOTE

This manual is based on the most recent information we have available on serial number **24761**. It may not reflect changes made to this unit in the field.

Addendum: LN_2 Boost Retrofit

This retrofit adds a LN_2 boost system to your chamber. In addition to describing the new control system, this addendum provides document replacement instructions.

Updating Your Original Manual

1. Add the new LN_2 option layout drawing to your manual.
2. Add the supplied parts list to the original parts lists.
3. Place this addendum and the supplied General Safety Instructions in front of your chamber manual.

Auxiliary Cooling

Auxiliary cooling is provided by a liquid nitrogen (LN_2) boost system. When the refrigeration system is operating at full cooling throttle, the liquid nitrogen (LN_2) auxiliary cooling system can be operated for a programmed percentage of a five-second interval.

For example, if you set the auxiliary cooling parameter to 30, the auxiliary cooling system comes on for 1.5 seconds (30% of five seconds) and then goes off for the remaining 3.5 seconds of the five-second interval. If you set the parameter to 100, the auxiliary cooling system comes on and stays on for as long as the refrigeration system is operating at full cooling throttle. For more detailed information, see the *4800 Programmer/Controller Operator Manual*.

THERMOTRON®

A Venturedyne, Ltd., Company

Environmental Test Chamber Instruction Manual

Installation/Operation/Preventive Maintenance/Service/Parts Lists/ Drawings

Revised April 29, 2009

For additional manuals, contact Thermotron Industries as follows:

Thermotron Industries
291 Kollen Park Drive
Holland, MI 49423, USA

Phone: (616) 392-6550
Fax: (616) 393-4549
www.thermotron.com

© Thermotron Industries

The information in this document is subject to change without notice. No part of this document may be reproduced or transmitted in any form or by any means, electronic or mechanical, without the express written permission of Thermotron Industries. Thermotron Industries may have patents or pending patent applications, trademarks, copyrights, or other intellectual property rights covering subject matter in this document. The furnishing of this document does not give you license to these patents, trademarks, copyrights, or other intellectual property except as expressly provided in any written license agreement from Thermotron Industries.

All relevant issues have been considered in the preparation of this document. Should you notice an omission or any questionable item in this document, please feel free to contact the Thermotron Product Support group between 8:00 am and 4:30 pm Eastern Standard Time at (616) 392-6550.

Regardless of the above statements, Thermotron Industries assumes no responsibility for any errors that may appear in this document nor for results obtained by the user as a result of using this product.

How to use this manual

Some instructions in this manual do not apply to your chamber. Sections A, B, C, and D begin with a guide that tells which instructions apply to your chamber. Check the first page of these sections before turning to other parts of the section.

See page iv for a description of your chamber and its specifications.

Instrument manuals and OEM literature are in Section F.

Many of the terms used in this manual are defined in the glossary in Section F.

The engineering drawings (assembly, electrical, refrigeration, pneumatic, etc.) are located in Section E.

The illustrations in this manual may not match your chamber exactly; use them only as a general guide.

Some pages may be intentionally left blank.

Table of Contents

General Safety Instructions i

Humidity Water Requirements iii

Specifications/General Description iv

Section A: Installation

A Guide to the Installation Instructions A1

Installation & Start Up Safety Instructions A2

Special Instructions A3a

Location A4

Setting Up Your Chamber A4

Adjusting the Compressor Mounts A5

Computer Interface Knockout A5

Anchoring a Chamber with a Removable Floor A6

Installing a Vertical-Lift Door A7

Installing and Removing a Removable Floor A8

Installing Refrigeration Piping A9

Connecting the Condenser Water Supply A10

Installing the Wet Bulb Thermocouple Wick A10

Connecting the Humidity Water Supply A11

Connecting a 781C Moisture Injection System A12

Connecting a Dry Air Purge Air Supply A12

Connecting the Basket Transfer Air Supply A13

Installing a GN_2, LN_2, or CO_2 System A13

Installing a Circulator Fan A14

Installing Port Gloves A15

Installing Electrical Wiring A16

Starting Up a Chamber A16

Section B: Operation

A Guide to the Operating Instructions B1

Operation Safety Instructions B2

Performing a Test B4

Operating a Vertical-Lift Door B6

Using Port Gloves B7

Using a Window Wiper B7

Connecting and Disconnecting the Electrical Power B7

Controlling the Interior Lights B7

Using a Purge System — Dry Air or GN_2 ..... B8

Using a 781C Moisture Injection System B8

Using an LN_2 or CO_2 Injection System B9

Using a Thermotrimmer B10

Using a Therm-Alarm® B10

What to Do If the Chamber Does Not Operate B11

Special Instructions B12

Section C: Maintenance

A Guide to the Preventive Maintenance Instructions C1

Preventive Maintenance Safety Instructions C2

Checking the Vacuum Pump Oil C3

Checking the R-23 or R-508B Charge (for chambers with built-in refrigeration gauges) C3

Checking the R-402A, R-404A, or R-507 Charge C4

Checking the Non-Dehumidifying Thermotrimmer Charge C5

Checking the Dehumidifying Thermotrimmer Charge C5

Cleaning the Air-Cooled Condenser C6

Wet Bulb Sensor Maintenance C6

Checking and Replacing the Exposed-Cartridge Demineralizer C7

Checking the Canister Type Demineralizer C7

Checking and Replacing the Water Filter C8

Filling the Air Line Oiler C8

Checking the Ground Fault Circuit Interrupter (GFCI) C8

Checking and Replacing the Air Filter C9

Miscellaneous Checks C9

Checking the R-23 or R-508B Charge (using a refrigeration gauge manifold) C10

Checking the R-402A, R-404A, or R-507 Discharge Pressure C11

Checking the Oil Level in a Compressor C12

Checking the Compressor Oil Pressure C13

Flushing the Vapor Generator or Pressurized Steam Generator C14

Testing the Chamber High Limit Switch (HLS) C15

Testing Safety Switches C16

Checking the Basket Transfer Fluid C16

Checking the Altitude System C16

Section D: Service

A Guide to the Service Instructions D1

Service Safety Instructions D2

Resetting Safety Switches D3

Replacing Heat Links D5

Cleaning the Flowmeter D6

Adding Refrigeration Oil D7

Recovering Used Refrigerant D8

R-402A and R-404A Special Charging Instructions D8

Charging the R-402A, R-404A, or R-507 Refrigeration System D9

Charging the R-23 or R-508B Refrigeration System D11

Charging the Thermotrimmer D12

Section E

Recommended Spare Parts E1

Returning Materials E2

Parts List and Drawings

Section F

Glossary of Terms and Abbreviations F1

Other Equipment Manufacturer's Literature

Read the first page of sections A, B, C, and D to know which instructions apply to you.

GENERAL SAFETY INSTRUCTIONS

Follow all WARNINGS to prevent death or personal injury.

WARNING: Do not operate this chamber unless it is completely assembled.

WARNING: This chamber operates at extreme temperatures. To prevent severe burns or frostbite, avoid contact with air, objects, and surfaces that are hotter than +38° (+100°F) or colder than 0°C (+32°F).

WARNING: Use this chamber only for testing the products it was designed to test. Do not put products in the chamber that could burn or explode.

WARNING: Make sure all warning labels remain attached to the chamber. If needed, order new labels from Thermotron Industries.

WARNING: Do not allow people to enter the chamber while it is operating unless your chamber is a walk-in designed for this purpose.

WARNING: Make sure the door(s) are closed while operating the chamber. Before opening a door, make sure the circulator fan(s) are not rotating and make sure the test space is near room temperature.

WARNING: GN_2 purge systems, LN_2 injection systems, and CO_2 injection systems can cause you to suffocate. To safely install and use these systems, you must follow the instructions on the material containers, the installation instructions in Section A, and the operating instructions in Section B of this manual.

WARNING: Dangerously high voltages are present in the electrical system. Before doing any electrical work, disconnect the electrical power with the main power disconnect switch, and disconnect any other sources of power.

WARNING: Before working near moving parts, disconnect the electrical power with the main power disconnect switch. Keep all guards and shields in place. Some systems, including refrigeration compressors, can start at ANY time while the main power is connected. Keep fingers away from compressor head fans.

WARNING: This manual has important safety information. All users must read pages i through iii and the Specifications and General Description.

- Before installing or starting up the chamber, read the instructions checked on page A1.
- Before operating the chamber, read the instructions checked on page B1.
- Before performing maintenance, read the instructions checked on page C1.
- Before servicing the chamber, read the instructions checked on page D1.

Safety instructions may also appear in the literature in Section F. Keep this manual in a place where it will be available to anyone working with the chamber.

WARNING: If you work with a hazardous material, read the Material Safety Data Sheet (MSDS) and the safety instructions on the container.

WARNING: Do not tip the machinery section more than 45° without special instructions from Thermotron Industries.

WARNING: The floors of walk-in chambers can become slippery. Keep the floor clean and dry. Check for ice, moisture, or grease before entering.

Follow all CAUTIONS to prevent equipment damage.

CAUTION: Do not shut down or remove power from the chamber until the chamber air temperature has cooled to ambient or lower. Shutting down the chamber when the chamber air temperature is high, especially with a live load, can allow the heat to continue building, causing damage to heat links and other components.

CAUTION: If main power is removed from the chamber for any length of time, the R-402A (HP-80), R-404A (HP-62), or R-507 (AZ-50) compressor could contain liquid refrigerant, which can damage or destroy a compressor. Check your chamber's refrigeration schematic and perform one of these steps:

- If the compressor has a pump-down-pressure switch, call the Thermotron Technical Liaison Advisors at (616) 392-6550. The switch will start the system immediately when you turn on the power, which can damage the compressor. The technical advisors will tell you how to start the chamber so you will not damage it. The call may be the only one you ever need to make if your plant has a qualified refrigeration service technician.
- If the compressor has a crankcase heater, apply main power to the chamber for eight hours before operating it to boil off the liquid refrigerant.

CAUTION: If you remove a moisture-sealed panel from the machinery section, reseal it.

NOTE: Although at times you MUST disconnect the electrical power for safety reasons, do not leave the main power off for longer than necessary. The automatic pump-down system cannot operate when the main power is off — an oil pressure trip may occur when the power is restored.

Read all safety labels on the chamber

Red and white **DANGER** labels indicate immediate hazards that WILL result in death or severe personal injury.

Orange and black **WARNING** labels indicate hazards or unsafe practices that COULD result in death or severe personal injury.

Yellow and black **CAUTION** labels indicate hazards or unsafe practices that could result in minor personal injury or damage to products or property.

Blue and white **SAFETY INSTRUCTIONS** are important reminders that should be read before operating the chamber.

HUMIDITY SUPPLY WATER REQUIREMENTS

It is your responsibility to provide the proper supply for your chamber's humidity system. Improper supply water can damage the humidity system.

NOTE: *Any failures due to improper supply water are not covered under warranty.*

To make sure your chamber's humidity supply water is adequate, you must determine the water's resistance in ohm-centimeters. The supply water must be clean and fall within the following resistances:

- 50k ohms to 1M ohms with no demineralizer
- 2k ohms to 50k ohms with a demineralizer

If you use a demineralizer, you must follow the limits listed in the following table to avoid damaging your chamber's humidity system.

Water Requirement Guidelines

Demineralizer Cartridge Type	Supply Water Resistance	Cartridge Water Capacity*	Humidity Generator	Maximum Humidity Water Usage**
Custom Products Guidelines				
Barnstead D0803 (1,725 grains)	10,000 ohm-cm	590 gallons	4.5 kilowatt-hours	1.5 gallons/hour
	5,000 ohm-cm	294 gallons	6 kilowatt-hours	2 gallons/hour
	2,000 ohm-cm	118 gallons	9 kilowatt-hours	3 gallons/hour
			12 kilowatt-hours	4 gallons/hour
MIL-SPEC 810D, E Guidelines				
Barnstead D0809 (760 grains)	10,000 ohm-cm	260 gallons	4.5 kilowatt-hours	1.5 gallons/hour
	5,000 ohm-cm	129 gallons	6 kilowatt-hours	2 gallons/hour
	2,000 ohm-cm	52 gallons	9 kilowatt-hours	3 gallons/hour
			12 kilowatt-hours	4 gallons/hour

* All gallons are approximate and based on 25°C water temperature.

** Based on 85°C and 95% RH operation.

NOTE: Refer to Section A (Installation) and Section C (Preventive Maintenance) for additional information.

NOTE: All low humidity chambers must first be operated in a temperature-only mode to evaporate any water condensation from inside the chamber before low humidity specifications can be met.

SPECIFICATIONS/GENERAL DESCRIPTION

Model Number: HPS-35

Serial Number: 24670

This is a temperature testing chamber with 35 cubic feet of test space. The chamber is automatically controlled from its instrument console. The following paragraphs provide the performance specifications and describe the chamber's systems.

SPECIFICATIONS

CAUTION: Operating the chamber beyond the specifications shown here can damage the chamber.

NOTE: See the engineering drawings for the electrical and water supply requirements.

Temperature Range:
-73°C to +177°C
-100°F to +350°F

Temperature Tolerance:
±1.1°C (±2°F) at the control sensor when the chamber is stable.

Temperature Performance:
+25°C to -40°C (+77°F to -40°F): 4 minutes
+25°C to -54°C (+77°F to -65°F): 5 minutes
+25°C to -65°C (+77°F to -85°F): 19 minutes
+25°C to +50°C (+77°F to +122°F): 1 minute
+25°C to +85°C (+77°F to +185°F): 3 minutes
+25°C to +125°C (+77°F to +257°F): 7 minutes

Live Load Capacity:
At -18°C (0°F): 10,000 watts
At -40°C (-40°F): 7,000 watts
At -54°C (-65°F): 5,000 watts

CHAMBER ELECTRICAL SYSTEMS

The electrical systems consist of the electrical compartment and the control transformer. The electrical compartment contains the power panel, which distributes the main power to the chamber. Refer to power schematic E5359-13-33(B).The power panel contains the main disconnect switch, circuit breakers, fuses, contactors, and other electrical components that protect the electrical system and the operator. The control transformer steps down the main power to the power required by the instrumentation and control circuits.

CHAMBER ENVIRONMENTAL SYSTEMS

The chamber's environmental systems are described below.

Heating System

Electric heating coils provide heat. The 4800 Programmer/Controller controls the heat outputs in two stages by operating the heater coils' solid state relays. Refer to power schematic E5359-13-33(B) and control schematic E5359-13-29(B).

Cooling System

Cooling is provided by a "cascade" refrigeration system – a 10-horsepower R-404A system combined with a 10-horsepower R-23 system. The 4800 provides two-stage cooling control to the system. Refer to control schematic E5359-13-29(B) and refrigeration schematic R5359-12-5(B).
The refrigeration system's condensing unit maintains system pressure to provide cooling for the chamber. The R-23 compressor circulates refrigerant through the evaporator coils inside the chamber plenum to remove heat from the test space. The "hot" refrigerant circulates through the compressor and then to the cascade condenser inside the machinery section. The R-404A compressor circulates refrigerant through the cascade condenser to remove heat from the R-23 refrigerant. The R-404A refrigerant then circulates through the water-cooled condenser, which removes heat from the R-404A refrigerant, returning it to a liquid state.

Chamber Plenum

The chamber plenum provides the heating, cooling, and air circulation to the test space for environmental testing. The plenum contains the air circulators, heater coils, and evaporator.

CONSOLE CONTROLS AND INSTRUMENTATION

The console provides the primary controls, indicators, and instrumentation for the chamber. When the chamber is properly enabled, you can control chamber operations from the console. The only exception is any customer-supplied product signal generation and monitoring equipment. The console controls and instrumentation are described below.

4800 Programmer/Controller

The 4800 Programmer/Controller is a programmable microcomputer that controls and monitors chamber functions. You can program the 4800 to automatically operate your chamber, or you can manually operate the chamber using the 4800 front panel keyboard and display. You also can operate the 4800 from a host computer using the IEEE-488 interface.
The following paragraphs describe the interface between the 4800 and your chamber. Refer to instrument wiring schematic E5359-13-31(B). For more detailed information, refer to the 4800 manuals in Section F.

Control Channels

Control channels monitor the chamber's environmental conditions and operate the control systems. Channel 1 of the 4800 senses the chamber temperature using the dry bulb thermocouple 1 input. Its outputs control the heating and cooling systems.

Therm-Alarm®

The Therm-Alarm® monitors the chamber temperature at the products under test using dry bulb thermocouple 2. The Therm-Alarm® provides product protection from extremely high and low temperatures. If the product temperature exceeds either limit, the Therm-Alarm® disables the control circuit at the chamber circulators. This cuts off all power to the control circuitry. Refer to the Therm-Alarm® manual in Section F.

Chart Recorder

The chart recorder is a microprocessor-based device used to chart changes of the testing space and the products under test during test intervals. Input 1 charts temperature readings from a resistance temperature device. For more detailed information, refer to the chart recorder manual in Section F.

Function Switch Descriptions

The function switches allow you to set up the chamber system for normal or maintenance operations.

POWER Switch and Lamp

The **POWER** switch acts as a master switch to provide power to or remove power from the chamber control circuits. The **POWER** switch must be in the ON position for the chamber to function.

LIGHT Switch and Lamp

The **LIGHT** switch operates the interior lights.

A GUIDE TO THE INSTALLATION INSTRUCTIONS

These instructions contain important information but they are **not** intended to be a complete guide to installation. Your chamber is a custom model built to your specifications and it may require additional assembly. The illustrations may not match your chamber. Before starting-up the chamber, make sure it is completely assembled according to your engineering drawings in section E.

Read and follow the installation instructions that are checked below. **The instructions that are not checked do not apply to your chamber.**

- ☑ Safety Instructions ..... i and A2
- ☐ Special Instructions A3a
- ☑ Location A4
- ☑ Setting Up Your Chamber A4
- ☑ Adjusting the Compressor Mounts A5
- ☑ Computer Interface Knockout A5
- ☐ Anchoring a Chamber with a Removable Floor A6
- ☐ Installing a Vertical-Lift Door A7
- ☐ Installing a Removing a Removable Floor A8
  __ Lever clamps __ Pneumatic clamps __ Screw clamps
- ☐ Installing Refrigeration Piping A8
- ☑ Connecting the Condenser Water Supply A10
- ☐ Installing a Wet Bulb Thermocouple Wick A10
- ☐ Connecting the Humidity Water Supply A11
- ☐ Connecting a 781C Moisture Injection System A12
- ☐ Connecting a Dry Air Purge Air Supply A12
- ☐ Connecting the Basket Transfer Air Supply A13
- ☐ Installing a __ GN_2 __ CO_2 (300 psig 1000 psig) __ LN_2 System A13
- ☑ Installing a Circulator Fan A14
- ☐ Installing Port Gloves A15
- ☑ Installing Electrical Wiring A16
- ☑ Starting Up a Chamber A16
- ☐ _____
- ☐ _____

INSTALLATION & START UP SAFETY INSTRUCTIONS

Follow all WARNINGS to prevent death or personal injury.

WARNING: **To safely install the chamber, you must read the General Safety Instructions on page i and everything in Section A that is checked on page A1.**

WARNING: **To install or start up the chamber, you must read the applicable instructions in this manual. If you need help, contact the nearest Thermotron field service office.**

WARNING: **You must be adequately trained in electrical, refrigeration, and mechanical work. This manual is not a substitute for electrical or refrigeration training.**

WARNING: **Do not perform the start-up procedure until your chamber and its options are completely installed. Before starting up the chamber, you must read the operating instructions in Section B that are checked on page B1.**

WARNING: **Dangerously high voltages that can kill are present. Do not turn on the electrical power until you are instructed to do so in the start-up procedure.**

WARNING: **Disconnect the electrical power before working near moving parts. Keep all guards and shields in place. The automatic pump-down system can start a compressor at ANY time while the main power is connected. Keep fingers away from compressor head fans.**

WARNING: **If your chamber has an LN_2, GN_2, or CO_2 injection system, make sure it is vented according to the instructions on page A13. If the LN_2, GN_2, or CO_2 is injected directly into the test space, nitrogen gas or carbon dioxide gas will be left in the chamber after each test, and you must dilute the gas with the surrounding room air. Using the chamber in a poorly ventilated area results in a build up of N_2 and CO_2, which could cause death by suffocation.**

WARNING: **Never tip a refrigeration system more than 45° unless so instructed by Thermotron.**

WARNING: **Some chambers could tip over when the door is opened. If your chamber is designed to be anchored to the floor, fasten the anchor points on the side opposite the door before opening it.**

Follow all CAUTIONS to prevent equipment damage.

CAUTION: Use the electrical power supply shown on your chamber's electrical drawing and serial tag. Air, water, and other supplies must be within the limits shown in the applicable instructions or drawings.

CAUTION: This equipment is heavy; use the proper equipment to move it. Do not put strain on pipes or external components.

CAUTION: Use silphos solder or silver alloy for all connections on refrigeration lines. Provide a constant, low-pressure purge of gaseous nitrogen (GN_2) on all refrigeration lines being soldered.

CAUTION: Do not use a refrigeration compressor as a vacuum pump.

CAUTION: Do not shut down or remove power from the chamber until the chamber air temperature has cooled to ambient or lower. Shutting down the chamber when the chamber air temperature is high, especially with a live load, can allow the heat to continue building, causing damage to heat links and other components.

CAUTION: If main power is removed from the chamber for any length of time, the R-402A (HP-80), R-404A (HP-62), or R-507 (AZ-50) compressor could contain liquid refrigerant, which can damage or destroy a compressor. Check your chamber's refrigeration schematic and perform one of these steps:

- If the compressor has a pump-down-pressure switch, call the Thermotron Technical Liaison Advisors at (616) 392-6550. The switch will start the system immediately when you turn on the power, which can damage the compressor. The technical advisors will tell you how to start the chamber so you will not damage it. The call may be the only one you ever need to make if your plant has a qualified refrigeration service technician.
- If the compressor has a crankcase heater, apply main power to the chamber for eight hours before operating it to boil off the liquid refrigerant.

LOCATION

Note the following when choosing a location for the chamber (and remote parts of the chamber):

- The foundation must be solid, level, and able to support the weight of both the chamber and the product being tested.
- Heat is produced when the chamber operates; you must provide enough ventilation to prevent excess heat buildup.
- If you will be injecting LN_2, GN_2, or CO_2 into the chamber, the area must be well ventilated to dilute the gas that is left in the chamber after each test.
- You must leave at least three feet of space on all sides of the chamber for service access.
- If you have a remote, air-cooled condenser, it must be installed on a cement pad or over roof beams that span load-bearing walls. The location must be level and must provide space for air circulation on all sides of the condenser. You must anchor the condenser in place.

SETTING UP YOUR CHAMBER

1. Remove your chamber from the shipping container. Remove any packaging and cut any bands holding it to the pallet.
2. Read any special installation instructions on page A3a.
3. Set the chamber in place according to the "Location" instructions above.
   - You can use a forklift or other heavy lifting device to move most chambers.
   - If you have a walk-in chamber, you will need to assemble it according to the numbered assembly drawing(s) in Section F.
4. If you have a remote machinery section or condenser, set it in place.
5. Your chamber may come with vibration isolators. If it does, you will find them inside the chamber when it arrives. They are waffle-patterned rubber strips that keep equipment from moving around. Lay them beneath the base of the chamber (and the feet of AGREE chambers), remote machinery section, or remote condenser.
6. Follow the rest of the installation instructions to completely install your chamber's options.

ADJUSTING THE COMPRESSOR MOUNTS

Your chamber's compressors may be mounted on springs. These springs provide a suspension system to allow the compressors to move during operation. Follow these steps to check the compressor mounts:

1. Remove the service panels on the machinery section and check the compressor mounts.
   - If the compressors are not mounted on springs, make sure the mounting nuts are tight, and install the service panels.
   - If the compressors are mounted on springs, perform steps 2 through 4.
2. Remove the shipping clips or blocks from beneath the compressors.
3. Install the nut on each mount.
   - Make sure each nut is completely threaded onto its mount.
   - Tighten the nut down to 1/8 inch above the plate.
4. Replace the service panels removed in step 1.

COMPUTER INTERFACE KNOCKOUT

The instrument console may have a two-inch-long metal knockout tab for computer interface cables. If available, the knockout is located on top of the console. To use the knockout hole:

1. Push on the tab from the inside until it pops out.
2. Feed the interface cable through the hole.
3. Install the cable's connector to the proper instrument.

ANCHORING A CHAMBER WITH A REMOVABLE FLOOR

WARNING: Some chambers could tip over. Fasten the anchor points on the side opposite the door(s) before you install the door(s).

To anchor the chamber, see your assembly drawings and follow this procedure:

1. If your chamber was shipped with removable cross-bracing on the legs, remove the bracing.
2. Position the legs so that they meet the following conditions:
   a. Diagonal distances beneath the chamber must be equal. You must measure from the left front corner to the right rear corner and from the right front corner to the left rear corner.
   b. The diagonal distance on top of the test compartment (inside the chamber) must be within 3/8 of an inch of the diagonal distance on the bottom of the test compartment. If your chamber has a vertical lift door, make sure the door is aligned with the sides of the chamber.
   c. The removable floor must slide freely in its slot.
3. If your chamber does not have a hinged door, fasten all the anchor points to the floor of the building.
4. If your chamber has one or more hinged doors, fasten all the anchor points to the floor of the building except for the anchor point(s) below the door hinges. Slide the removable floor into its slot, and follow this procedure for each hinged door:
   a. If the door is not installed, install it and continue to step b. (For vertical lift doors, see "Installing a Vertical-Lift Door" on page A7.)
   b. With the door slightly open, use a floor jack to raise the latch side of the door until the top of the door is 1/8 inch above the top of the test compartment.
   c. Make sure the removable floor can slide freely.
   d. Anchor the leg on the hinge side of the door.

INSTALLING A VERTICAL-LIFT DOOR

WARNING: Some chambers could tip when the door is installed and opened. If your chamber is designed to be anchored to the floor, fasten the anchor points on the side opposite the door before installing it.

To install a vertical-lift door, refer to the assembly drawing and follow this procedure:

1. Assemble the frame of the door as shown in fig. A1. Make sure all bolts are well tightened with a wrench.
   a. Connect the cross members (2) to the uprights (1) with the bolts (3).
   b. Attach the frame to the chamber as shown on your assembly drawing.
2. Install the hoist as shown in fig. A2.
   a. Hold the hoist (1) in position between the cross members so the chain hangs down.
   b. Install a bolt (2) with a washer (3) on the outside of each cross member and a spacer (4) on the inside of each cross member as shown. To put the spacers on the bolt, insert the bolt through one of the cross members, thread the spacers on to the bolt, and insert the bolt through the other cross member. Repeat this step for the second bolt.
3. Make the necessary electrical connections. See the electrical drawing and the hoist manual.
4. Attach the hoist chain to the door.

NOTE: Do not release the door clamps or braces. (You will release them during the start-up procedure.)

NOTE: If your chamber has two vertical doors, you may need to install cross braces between the two door frames. See your assembly drawing to determine if you have cross braces.

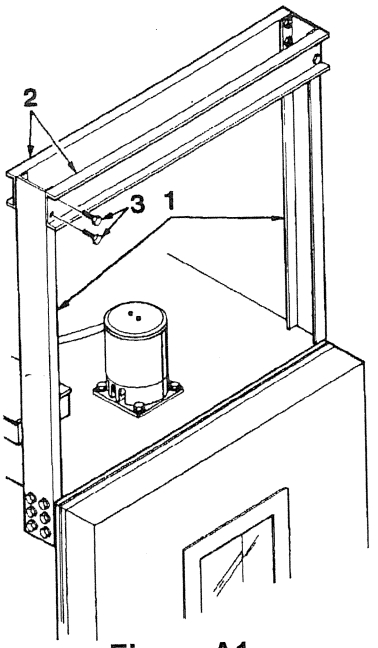

Figure A1

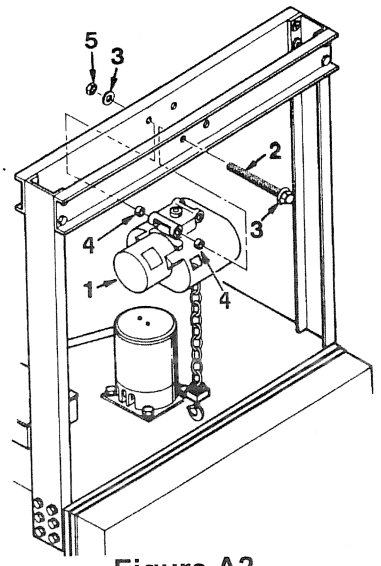

Figure A2

INSTALLING AND REMOVING A REMOVABLE FLOOR

A removable floor can be a flexible diaphragm for vibration testing or it can be a solid floor plug.

To install the diaphragm or floor plug, open the door, slide the floor into its slot, and tighten the floor clamps.

To remove the diaphragm or floor plug, open the door, release the floor clamps, and pull the floor out of its slot.

Your chamber has one of the following types of floor clamps (page A1 indicates which type your chamber has):

- **Lever clamps** (fig. A3): To tighten lever clamps, push the handles (1) away from each other. Insert the bolts (2) in the holes (3). To release the clamps, remove the bolts and push the handles toward each other.
- **Pneumatic clamps**: To tighten pneumatic clamps, put the pneumatic clamp valve in the CLOSED position. To release the clamps, put the pneumatic clamp valve in the OPEN position.
- **Screw clamps**: To tighten screw clamps, turn them clockwise. To release the clamps, turn them counterclockwise.

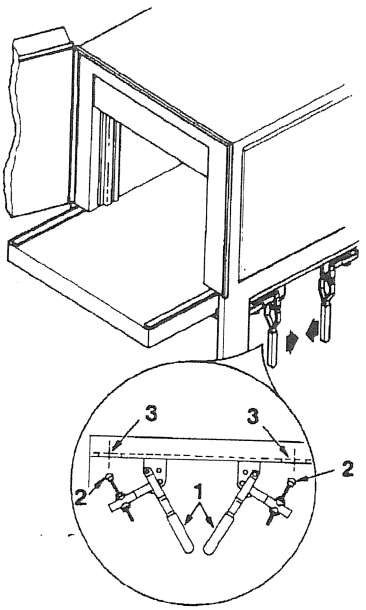

Figure A3

INSTALLING REFRIGERATION PIPING

WARNING: **Do not attempt to install refrigeration piping if you are not a qualified refrigeration technician. You could injure yourself or damage the chamber.**

WARNING: **This manual is not a substitute for refrigeration training.**

CAUTION: Use silphos solder or silver alloy for all connections on refrigeration lines.

CAUTION: To reduce copper oxide contamination while soldering, provide a constant, low-pressure purge of gaseous nitrogen (GN_2) on all refrigeration lines being soldered.

To install refrigeration piping, follow these instructions:

1. Connect the piping according to the assembly and refrigeration drawings. All lines that connect to holding tanks will have copper caps and schrader valves.
   a. If you are connecting a remote, air-cooled condenser, install inverted traps on the inlet lines to the air-cooled condenser.
   b. If you are connecting a remote machinery section:
      - Install a trap for every ten feet of rise on all vertical lines over ten feet.
      - Reduce the pipe size by one size for every ten feet of rise on all vertical lines except suction lines that are over ten feet.
      - Install horizontal suction lines to slope toward the machinery section at an angle of one inch per ten feet.
2. Leak check all joints that you have soldered.
3. Insulate the lines as necessary. Double insulate R-23 or R-508B liquid lines.
4. Use a portable vacuum pump to evacuate the refrigeration system(s) to 500 microns. The system(s) must maintain 500 microns for one hour.

   CAUTION: Do not use the refrigeration compressor as a vacuum pump.
5. Close the manifold valves.
6. Stop the vacuum pump.
7. Open the receiver tank valves.

CONNECTING THE CONDENSER WATER SUPPLY

CAUTION: If your system has an open drain line, the water pressure must be between 35 psig and 60 psig.

CAUTION: If your system does not have an open drain line, the water pressure differential must be between 30 psig and 60 psig with a maximum inlet pressure of 150 psig.

CAUTION: The supply and drain piping must be at least as large as the inlet and outlet fittings. If you are connecting more than one system to the same line, make sure the piping is large enough to handle the combined water requirements.

To connect the condenser water supply, follow this procedure:

1. See the assembly drawing for the location of the water inlet(s) and outlet(s). See the refrigeration schematic or the assembly drawing for the water supply requirements.
2. Install any necessary piping.
3. Before making the final connections, flush the lines with water to remove any debris.
4. Make the final connections, and check for leaks.

INSTALLING THE WET BULB THERMOCOUPLE WICK

CAUTION: Thoroughly wash your hands before touching the wick. Oil from your hands can affect the wet bulb performance.

NOTE: A wick may already be installed when you receive your chamber.

To install the wet bulb wick, follow this procedure:

1. Remove the wick package from inside the chamber.
2. Cut a length of wick long enough to completely cover the wet bulb thermocouple and reach into the wick tank or tube. Store the rest in a clean container.
3. Slide the wick over the wet bulb thermocouple. Make sure the wick completely covers the wet bulb so humidity readings will be accurate.
4. Put the end of the wick into the wick tank or tube.

CONNECTING THE HUMIDITY WATER SUPPLY

CAUTION: If you are using a demineralizer, the water entering the demineralizer must have a specific resistance of 2,000 to 50,000 ohm-centimeters. Do not use distilled water or other super-pure water.

CAUTION: If you do not have a demineralizer, the incoming humidity water must be demineralized with a specific resistance in the range of 50,000 to 1,000,000 ohm-centimeters. You can use distilled water, but you cannot use other super-pure water. (For chambers built before June, 1988, the resistance range is 50,000 to 300,000 ohm-cm.)

To set up the humidity system, follow this procedure:

1. Remove the necessary panel from the machinery section and close the FILL valve (fig. A4) on the vapor generator tank. Make sure the DRAIN valve on the back side of the tank is closed.
2. If your chamber has a canister-type demineralizer (as shown in fig. A5), install it.
3. Connect the water supply to the humidity water inlet. See your assembly drawing for the humidity water inlet location. See your assembly drawing or humidity system drawing for the supply requirements.
4. Connect a hose from the humidity water outlet to an open drain. See your assembly drawing for the outlet location.
5. Open the FILL valve. Leave the DRAIN valve closed.
6. Check for leaks.
7. Make sure the water level in the wick tank is high enough keep the wick thoroughly wet but not so high as to splash out when air blows over it. (The wick tank is on an inner wall of the chamber.) Also, make sure the wick is covering the wet-bulb thermocouple and dipping into the water.

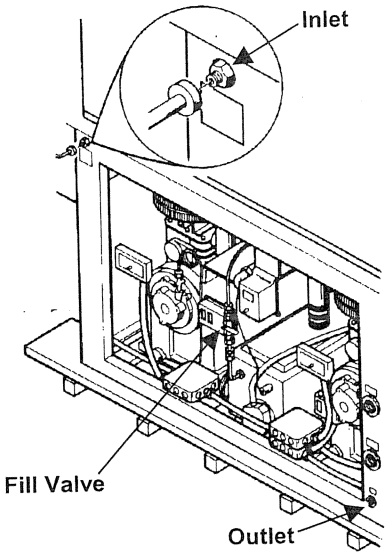

Figure A4

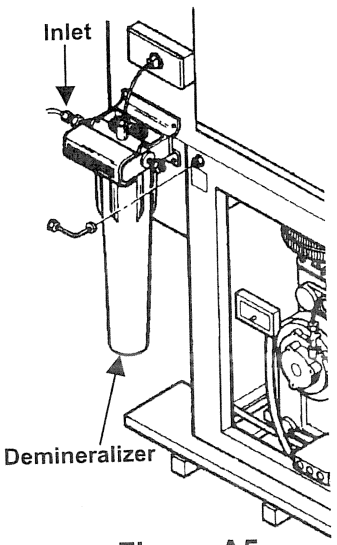

Figure A5

CONNECTING A 781C MOISTURE INJECTION SYSTEM

To connect a 781C moisture injection system, follow this procedure:

1. See your assembly drawing and fig. A6 for the air inlet and water inlet locations.
2. Connect the water supply to the water inlet. The water pressure must be between 5 psig and 25 psig. The flow rate cannot exceed two gallons per hour.
3. Connect the air supply to the air inlet. The air supply must be clean, oil-free, and dry. The air pressure must be between 20 psig and 70 psig. The flow rate cannot exceed 10.2 scfm.

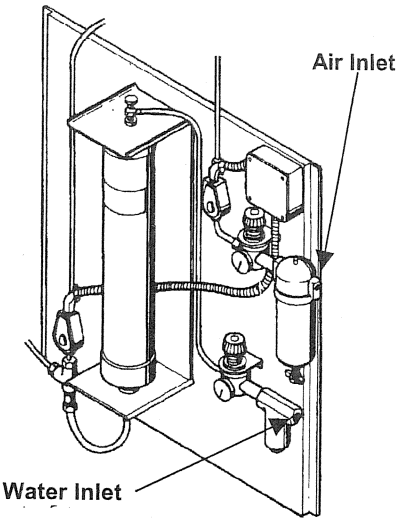

Figure A6

CONNECTING A DRY AIR PURGE AIR SUPPLY

To connect a dry air purge air supply, follow this procedure:

1. See the dry air purge drawing and fig. A7 for the air inlet location.
2. Connect the air supply to the air inlet. The air must be clean, oil free, and dry.
3. Find the dryer size (DS1, DS2, or DS3) on the dryer's serial plate, and check its inlet pressure. From the chart below, find the purge's air flow rate. The air flow rates are the maximum amount of air that the dryer can dry without becoming saturated.
4. With the purge operating, use the flowmeter to adjust the air flow rate to the rate shown on the chart.

NOTE: If the dry air purge does not include a dryer or filter, the air supply must be dried and/or filtered as necessary.

	Air Flow Rates ft^3/min		
psig	**DS1**	**DS2**	**DS3**
100	5.2	6.8	10.3
90	4.7	6.2	9.0
80	4.0	5.0	7.5
70	3.5	4.3	6.5
60	2.8	3.5	5.4

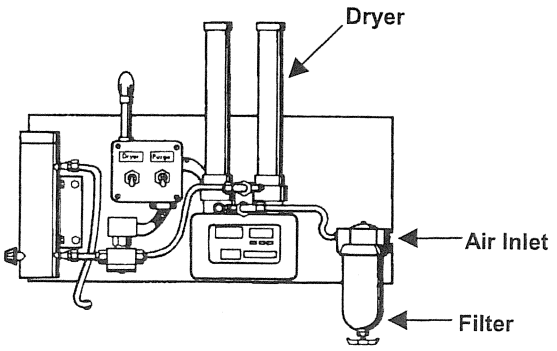

Figure A7

CONNECTING THE BASKET TRANSFER AIR SUPPLY

Connect a 100 psig air supply to the air inlet on your chamber. See the assembly drawing to find the location of the inlet.

INSTALLING A GN_2, LN_2, OR CO_2 SYSTEM

WARNING: Improperly installing a GN_2 (gaseous nitrogen), LN_2 (liquid nitrogen), or CO_2 (carbon dioxide) system can cause death by suffocation. Make sure the chamber is vented according to the instructions in this section.

To install the GN_2, LN_2, or CO_2 system, follow this procedure:

1. See the assembly drawing for the location of the chamber vent(s).
2. Connect a vent line from the chamber vent to the outside of the building. Make sure the vent outlet is not near a fresh air intake for the building.
   - To prevent back pressure, the vent line must be short, straight, and at least as large in diameter as the chamber vent.
   - Repeat this procedure for any other vents.
3. See the assembly drawing for the location of the GN_2, LN_2, or CO_2 inlet, and connect the needed supply:
   - For **GN_2** systems, connect a gaseous nitrogen supply to the inlet at a maximum pressure of 100 psig (unless your chamber drawings indicate a different pressure).
   - For **LN_2** systems, connect a liquid nitrogen supply to the inlet at a maximum pressure of 40 psig (unless your chamber drawings indicate a different pressure). Include a high-pressure relief valve in the line and insulate the line.
   - For **CO_2** systems, connect a carbon dioxide supply to the inlet at a maximum pressure of 300 or 1000 psig as indicated on page A1. Include a high-pressure relief valve in the line and insulate the line.
4. Leak check the connection.

INSTALLING A CIRCULATOR FAN

To install a circulator fan, follow this procedure:

1. Install the motor according to fig. A8 and your assembly drawing:
   a. Apply a bead of non-hardening caulk around the circulator shaft hole (1).
   b. Insert the shaft (2) of the circulator into the hole.
   c. Attach the motor with the motor-mounting bolts (3) and washers (4) as shown. Do not tighten the bolts yet.
2. Install the fan blade according to fig. A9:
   a. Slide the fan blade (1) on the shaft (2) with the hub facing down.
   b. Insert the set screw (3) so it contacts the flat side of the shaft. Do not tighten the set screw yet.
   c. Put the flat washer (4), the lock washer (5), and the nut (6) on the shaft.
   d. Tighten the nut with a wrench.
   e. Tighten the set screw with an Allen wrench.
3. Spin the fan blade with your hand to make sure it spins freely. If the fan blade hits something, adjust the position of the motor.
4. Tighten the motor-mounting bolts with a wrench.
5. Check again for free movement of the fan blade. Adjust the position of the motor if necessary.

Procedure continues on next page

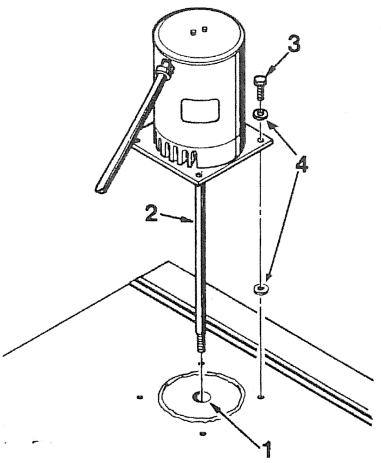

Figure A8

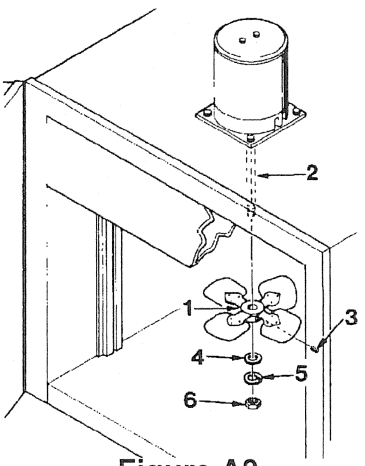

Figure A9

6. Remove the cover plates (1, fig. A10) on the motor housing, and install the conduit and wiring. See the assembly electrical drawings. (Check the direction of rotation during the start-up procedure.)
7. Replace the cover plates.

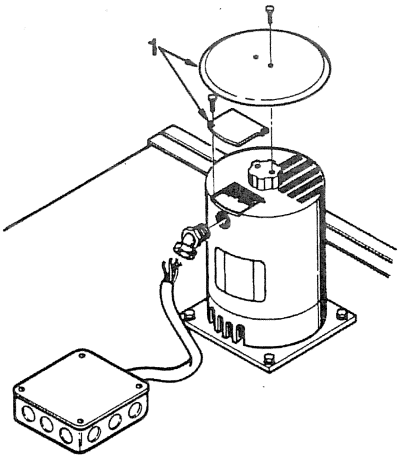

Figure A10

INSTALLING PORT GLOVES

To install port gloves, see fig. A11 and follow this procedure:

1. Remove the port plug (2) and the hose clamp (4) from the glove port (3).
2. From the outside, insert the correct glove (1) into the port, and put the cuff of the glove around the port rim.
3. Fasten the glove in place with the hose clamp (4).
4. Place the port plug inside the chamber so it can be used to plug the port when the gloves are pulled to the outside of the chamber.
5. Repeat the procedure for the other glove.

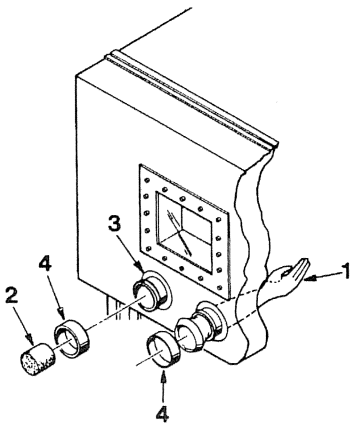

Figure A11

INSTALLING ELECTRICAL WIRING

If you must install interconnect wiring between remote parts of the chamber, see the electrical schematics for interconnect information. Install any necessary conduit. Connect numbered wires to their matching terminals.

After installing all other wiring, install the main power wiring according to the electrical schematic and the power requirements shown on the serial tag, which is normally located on the electrical compartment. Use an electrical supply system with a separate electrical ground conductor, and use the correct size of circuit breaker or fuse. Leave the main power disconnect switch off; you will turn it on during the start-up procedure.

STARTING UP A CHAMBER

WARNING: **You must operate the chamber to perform this procedure. Do not attempt to operate the chamber unless you have read the instructions in Section B that are checked on page B1. This manual is not a substitute for electrical or refrigeration training.**

WARNING: **Do not start up the chamber until it and its options are completely installed according to the engineering drawings and installation instructions.**

CAUTION: If main power is removed from the chamber for any length of time, the R-402A (HP-80), R-404A (HP-62), or R-507 (AZ-50) compressor could contain liquid refrigerant, which can damage or destroy a compressor. Check your chamber's refrigeration schematic and perform one of these steps:

- If the compressor has a pump-down-pressure switch, call the Thermotron Technical Liaison Advisors at (616) 392-6550. The switch will start the system immediately when you turn on the power, which can damage the compressor. The technical advisors will tell you how to start the chamber so you will not damage it. The call may be the only one you ever need to make if your plant has a qualified refrigeration service technician.
- If the compressor has a crankcase heater, apply main power to the chamber for eight hours before operating it to boil off the liquid refrigerant.

NOTE: If your chamber does not have a mechanical refrigeration system, please disregard all references to mechanical refrigeration components.

NOTE: Use the manual mode of the programmer/controller for the start-up procedure.

NOTE: When checking amperage, refer to the electrical schematic for the correct values. Make sure the values are within ±10% of the values shown on the electrical schematic. On three-phase components, make sure the amperage is the same for each phase.

You will need:

- Amprobe and digital voltmeter
- Temperature reference (an ambient compensated type 'T' thermocouple simulator and/or a resistance decade box)
- Refrigeration leak detector
- Refrigeration wrench, flare wrench, crescent wrench
- Refrigeration gauge manifold(s) with hoses

Procedure begins on next page

To start up the chamber, follow this procedure:

1. Make sure the door(s) seals well and is aligned properly. If your chamber has a removable floor, make sure the floor seals well and is aligned properly.
2. Make sure all electrical connections in the electrical compartment are tight.
3. Remove the panels from around the machinery section.
4. Find any service valves that have red tags attached. For each valve with a red tag, remove the service cap (1, fig. A12), loosen the packing gland, turn the valve stem all the way out (backseat), and remove the red tag. After you remove the red tag, tighten the packing gland, and replace the service cap.

   NOTE: After opening the valves (above), do not wait longer than necessary to turn on the main power (step 9). Waiting too long may cause an oil pressure trip.

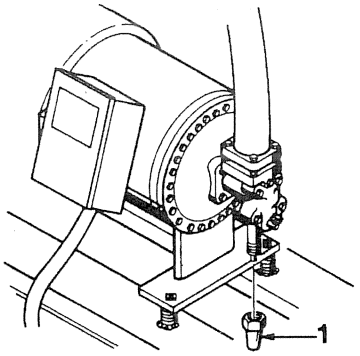

Figure A12

5. Remove any shipping blocks from under the compressor(s). If they are mounted on external springs, install the grommets and tighten the nuts to 1/8 inch above the plate.
6. Check the refrigeration system for leaks.
7. If your chamber has an R-23 or R-508B refrigeration system, check the system's charge according to the instructions in Section C.
8. Make sure the **MASTER** or **PILOT** switch is in the OFF position. Make sure the electrical compartment door is closed. Make sure the input voltage is correct.
9. Turn on the main power using the disconnect switch.

   CAUTION: The pump down pressure switch (PDPS) will start a system as soon as you connect main power. Call Thermotron before applying main power if your chamber has a PDPS.
10. If your chamber has a vertical-lift door, make sure the hoist chain is supporting the door before removing the door braces and releasing the wheel locks. Make sure the door operates properly and moves freely. (See the operating instructions in Section B.)
11. Connect a temperature reference to the thermocouple or RTD inputs on your instrument(s). Refer to your instrument drawing. For thermocouples, use an ambient compensated type 'T' thermocouple simulator; for RTD sensors, use a resistance decade box. Make sure the instruments indicate the correct temperature. (The **MASTER** or **PILOT** switch may need to be ON.) If an instrument indicates an incorrect temperature, calibrate it according to the instructions in the instrument manual.
12. Make sure any three-phase circulator fans or blowers rotate in the correct direction — a label by the motor indicates the correct direction of rotation. To check the rotation, operate the circulator momentarily; do not allow the circulator to keep running the wrong way, or you will damage the motor. If you must change the direction of rotation, disconnect the electrical power and swap the positions of any two lead wires.
13. Make sure the instrument sensor(s) are positioned in the strongest circulator air flow.
14. Operate the chamber at a set point near room temperature, and check the amperage on the circulator motor(s).

    WARNING: High voltages that can kill are present. Use caution when checking amperages.
15. Operate the chamber at a high temperature set point, and check the amperage on the heaters.
16. If your chamber has a water-cooled condenser, make sure the water supply is on. Adjust the flow rate so the refrigerant has the correct head pressure.

17. If your chamber has a remote air-cooled condenser, make sure the condenser fan(s) spins so the air blows upward.
18. Operate the chamber at a low temperature set point and check the amperage on the compressor(s).
19. Put the refrigeration system into bypass mode to check the bypass pressure. To put the system into bypass mode, program the chamber to go cold, then program the chamber to go hot using a temperature that is higher than the chamber can reach in two minutes.
20. Read the suction gauge. The pressure on the gauge is the bypass setting. Make sure the bypass valve setting is correct, or adjust it as necessary. See the refrigeration schematic for the correct setting.
21. If your chamber has an altitude testing system, operate the chamber at a high altitude set point. Check the amperage on the vacuum pump.
22. If your chamber has a humidity system, operate the chamber at a high humidity set point. Check the amperage on the humidity heater.
23. Turn to Section C to perform the following procedures if they apply to your chamber:
    - Check the R-402A (HP-80), R-404A (HP-62), or R-507 (AZ-50) charge.
    - Check the compressor oil level.
    - Check the compressor oil pressure.
    - Check the R-402A (HP-80), R-404A (HP-62), or R-507 (AZ-50) discharge pressure.
24. Perform a test that uses all the chamber systems. Make sure the chamber performs according to the specifications in the Specifications/General Description section at the beginning of this manual. Make sure all the systems operate. (To check a purge system, make sure the float in the flowmeter rises when the system operates.) Check the amperage on any other major components that you have not checked yet.
25. Perform a 24-hour test with an empty chamber. If the chamber operates properly, you can begin product testing.

A GUIDE TO THE OPERATING INSTRUCTIONS

Read and follow the operating instructions that are checked below. **The instructions that are not checked do not apply to your chamber.**

- ☑ Safety Instructions ..... i and B2
- ☑ Performing a Test B4
- ☐ Operating a Vertical-Lift Door B6
- ☐ Using Port Gloves B7
- ☐ Using a Window Wiper B7
- ☑ Connecting and Disconnecting the Electrical Power B7
- ☑ Controlling the Interior Lights B7
- ☐ Using a Purge System – __ *Dry Air* __ GN_2 ..... B8
- ☐ Using a 781C Moisture Injection System B8
- ☐ Using a __ LN_2 __ CO_2 Injection System B9
  __ *Boost* __ *Backup* __ *Injection Only*
  __ *Direct Injection* __ *Through Coil*
- ☐ Using a Thermotrimmer __ *Dehumidifying* __ *Non-dehumid* B10
- ☑ Using a Therm-Alarm® B10
- ☑ What To Do if the Chamber Does Not Operate B11
- ☐ Special Instructions B12
- ☑ Programmer/Controller Manual ..... Section F
- ☑ Therm-Alarm® Manual ..... Section F
- ☐ System Monitor Manual ..... Section F
- ☑ Recorder Manual ..... Section F
- ☐ _____
- ☐ _____

OPERATION SAFETY INSTRUCTIONS

Follow all WARNINGS to prevent death or personal injury.



WARNING: **To safely operate the chamber, you must read the General Safety Instructions on page i and all the instructions in Section B that are checked on page B1.**

WARNING: **Avoid exposure to air and equipment that is not near room temperature (+23°C). Port gloves are not designed to insulate your hands.**

WARNING: **Always avoid moving parts such as fan blades because some systems start automatically even when you are not performing a test. Keep all guards and shields in place.**

WARNING: **Use your chamber to test only the products it was designed to test. Do not put combustible or explosive materials in the chamber.**

WARNING: **Do not use your chamber for explosion testing.**

WARNING: **Keep the chamber door closed while the chamber is operating unless you have a walk-in chamber that is designed to be entered while it is operating.**

WARNING: **You can suffocate if you breathe gas from an LN_2 (liquid nitrogen), GN_2 (gaseous nitrogen), or CO_2 (carbon dioxide) system. Read the instructions on page B8 or B9 if you have one of these systems.**

WARNING: **Read the instructions on page B6 to safely operate a vertical-lift door.**

Follow all CAUTIONS to prevent equipment damage.

CAUTION: You must perform a special start-up procedure the first time you use a chamber. See "Starting Up a Chamber" in Section A for the procedure.

CAUTION: Do not shut down or remove power from the chamber until the chamber air temperature has cooled to ambient or lower. Shutting down the chamber when the chamber air temperature is high, especially with a live load, can allow the heat to continue building, causing damage to heat links and other components.

CAUTION: If main power is removed from the chamber for any length of time, the R-402A (HP-80), R-404A (HP-62), or R-507 (AZ-50) compressor could contain liquid refrigerant, which can damage or destroy a compressor. Check your chamber's refrigeration schematic and perform one of these steps:

- If the compressor has a pump-down-pressure switch, call the Thermotron Technical Liaison Advisors at (616) 392-6550. The switch will start the system immediately when you turn on the power, which can damage the compressor. The technical advisors will tell you how to start the chamber so you will not damage it. The call may be the only one you ever need to make if your plant has a qualified refrigeration service technician.
- If the compressor has a crankcase heater, apply main power to the chamber for eight hours before operating it to boil off the liquid refrigerant.

CAUTION: Do not operate the chamber beyond the specifications given on page iv.

CAUTION: Protecting your product from high or low temperatures is your responsibility. To protect your product from temperature extremes, you must use a product protection device such as a Therm-Alarm®. A high limit switch (HLS) does **not** protect products.

CAUTION: Port gloves and window wipers can melt at high temperatures. Port gloves melt at +65°C(+150°F); window wipers melt at +120°C (+250°F).

CAUTION: Before resetting a safety device, read the instructions on page B12.

CAUTION: To avoid damaging automatic thermal shock (ATS) chambers, you must defrost the cold box(es) often enough and long enough to prevent excessive frost build-up on the evaporator coils and/or the chamber drain lines. If you are testing continuously, you must completely defrost the cold box a minimum of once every 24 hours — possibly more often depending on how quickly frost builds up. A complete defrost may take one half hour or more. See the defrost programming instructions in your programmer/controller manual. When defrosting, make sure the water drains out of the test compartment. **NOTE**: Using a dry air purge or GN_2 purge reduces the rate of frost build-up.

HOW TO PERFORM A TEST

WARNING: Read everything checked on page B1 before operating the chamber.

NOTE: See the Specifications/General Description for a description of your chamber's systems, controls, and instrumentation.

To operate the chamber in the program mode, follow this procedure:

1. Load the products into the chamber. Place the Therm-Alarm® thermocouple on or near a product. Close the door.
2. If needed, program a test on the 4800 Programmer/Controller. For more information, refer to the 4800 manuals in Section F.
3. Put the **POWER** switch in the ON position.
4. If needed, prepare the Therm-Alarm® and the chart recorder for the test according to their manuals in Section F.
5. Start the test with the 4800. For more detailed information, refer to the 4800 operator manual in Section F.

To operate the chamber in the manual mode, follow this procedure:

1. Load the products into the chamber. Place the Therm-Alarm® thermocouple on or near a product. Close the door.
2. Put the **POWER** switch in the ON position.
3. If needed, prepare the Therm-Alarm® and the chart recorder for the test according to their manuals in Section F.
   - At the 4800, use the manual mode to operate the chamber. For more information, refer to the 4800 manual in Section F.

OPERATING A VERTICAL-LIFT DOOR

WARNING: Before operating the door, read the operation section of the hoist manual.

WARNING: Make sure the chamber is properly anchored to the floor so the chamber cannot tip over.

WARNING: When operating the door, stand at the side of the chamber and keep other people away. The door is heavy and can cause serious injury if it falls or if it pins a person.

To open the door, see fig. B1 and follow this procedure:

1. Turn both wheel locks (1) all the way out (counterclockwise).
2. Press the **up arrow** button on the hoist control device (2). Hold the button in until the door reaches the top. When the door reaches the top, the safety arms should fall into the track and the hoist should stop operating.
3. Press both the **OVERRIDE** button (3) and the **down arrow** button on the hoist control device. Hold both buttons in until the door rests on the safety arms.

To close the door, follow this procedure:

1. Make sure both wheel locks (1) are turned all the way out (counterclockwise).
2. Press and hold the **up arrow** button on the hoist control device (2) to raise the door about six inches so the safety arms can retract.
3. Press and hold in the **down arrow** button on the hoist control device until the door reaches the bottom. (The safety arms retract automatically.)
4. Turn the wheel locks clockwise until the door fits tightly against the chamber.

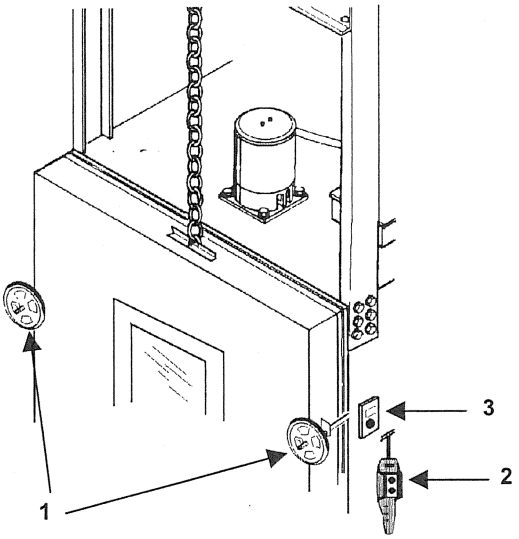

Figure B1

USING PORT GLOVES

WARNING: **Port gloves do not insulate your hands. Using gloves left in a chamber when the temperature is lower than 0°C (+32°F) or higher than +38°C (+100°F) could cause frostbite or burn your hands.**

CAUTION: To keep the gloves from melting, remove them from the test space before operating the chamber above +65°C (+150°F).

Insert your hands into the port gloves (fig. B2) to handle a product on test without opening the chamber door. To remove the gloves from inside the chamber, pull them to the outside of the test space, and insert the port plug into the port as you pull the gloves out.

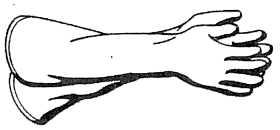

Figure B2

USING A WINDOW WIPER

CAUTION: To keep the wiper blade from melting, remove it before operating the chamber above +120°C (+248°F).

Turn the window wiper handle back and forth to clean condensation from the window.

CONNECTING AND DISCONNECTING THE ELECTRICAL POWER

Use the main power disconnect switch to turn on or turn off the main power to the chamber. If your chamber has a Thermotron-supplied disconnect switch (fig. B3) on the electrical compartment door, put this switch in the OFF position to disconnect the electrical power. Put it in the ON position to connect the electrical power.

Although at times you MUST disconnect the electrical power, do not leave it off for longer than necessary, or a refrigeration trip may occur.

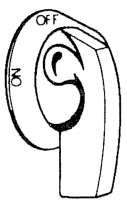

Figure B3

CONTROLLING THE INTERIOR LIGHTS

Use the **LIGHT** switch to turn the lights on and off. The **LIGHT** switch may be on the console or by the chamber door.

USING A PURGE SYSTEM – Dry Air or GN_2 (Gaseous Nitrogen)

WARNING: **You can suffocate if you breathe gas from a GN_2 system. Make sure the chamber is vented according to the instructions on page A13. Before removing a product after a test, you must dilute the nitrogen gas as follows:**

1. **Remove a port plug or open the chamber door several inches and operate the circulator fan for five minutes.**
2. **Stay away from the chamber until the gas is diluted. Do not operate a GN_2 system when the chamber door is open.**

The purge system injects dry air or dry gaseous nitrogen (GN_2) directly into the test space to reduce the amount of moisture in the chamber air and reduce frost accumulation on the product and on the cooling coils. Some dry air purge systems are also used for low humidity testing.

If you have a dry air purge assembly with **DRYER** and **PURGE** switches (fig. B4), leave the switches in the ON position for normal operation.

If you must adjust the rate of dry air or GN_2 injection, turn the valve on the flowmeter. See the assembly drawing to find the flowmeter location.

WARNING: **To avoid injury, do not turn the flowmeter valve all the way out unless the flowmeter is completely unpressurized.**

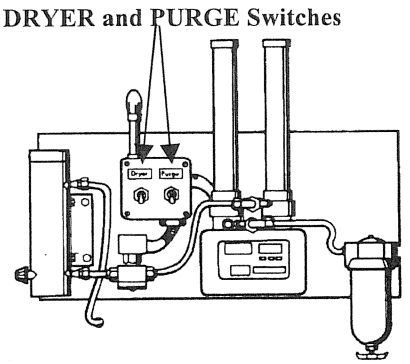

Figure B4

USING A 781C MOISTURE INJECTION SYSTEM

Use this system to inject moisture into the chamber in the form of a fine mist. The system is designed to meet the military specification MIL STD 781C.

If you must adjust the air or water flow rates, adjust the air or water regulators. (See fig. B5.)

CAUTION: To avoid damaging the injection system, do not adjust the water flow regulator above 25 psig.

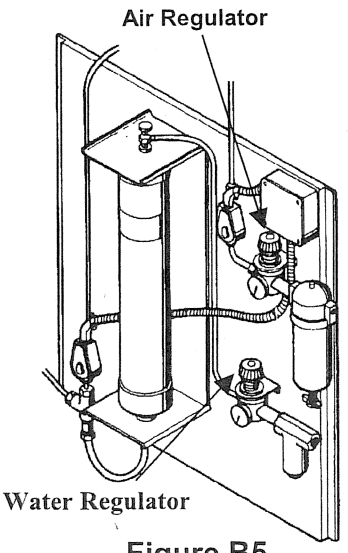

Figure B5

USING AN LN_2 (Liquid Nitrogen) OR CO_2 (Carbon Dioxide) INJECTION SYSTEM

WARNING: You can suffocate if you breathe gas from the LN_2 or CO_2 system. Make sure the chamber is vented according to the instructions on page A13. Read all warnings on the container of LN_2 or CO_2. If you use a direct-injection system, nitrogen gas or carbon dioxide gas will be concentrated in and around the chamber. Before removing a product after a test, perform one of these steps to dilute the gas (page B1 indicates the type of injection system you have):

- **If you have a dry air purge, operate it for five minutes to purge the chamber air.**
- **If you do not have a dry air purge, remove a port plug or open the chamber door several inches and operate the chamber circulator fan for five minutes. Stay away from the chamber until the gas is diluted. Do not operate an LN_2 or CO_2 system when the chamber door is open.**

NOTE: CO_2 is heavier than air; LN_2 is lighter than air.

LN_2 or CO_2 is injected into the chamber (either directly or through a coil) to cool the test space. This cooling can be used in three possible ways:

- **"Boost" or "auxiliary" cooling** – The LN_2 or CO_2 is used along with the mechanical refrigeration system to provide additional cooling.
- **"Backup" cooling** – The LN_2 or CO_2 cools the chamber if the mechanical refrigeration system fails.
- **"Injection only" cooling** – The LN_2 or CO_2 provides all of the cooling (for chambers that have no mechanical refrigeration).

If you must adjust the rate of LN_2 or CO_2 injection, see your programmer/ controller manual for instructions. If you cannot adjust the rate using your programmer/controller, use the capacity controller (fig. B6) located inside the console. If you turn the capacity controller toward the HI position, the LN_2 or CO_2 is injected at a faster rate. If you turn the capacity controller toward the LO position, the LN_2 or CO_2 is injected at a slower rate.

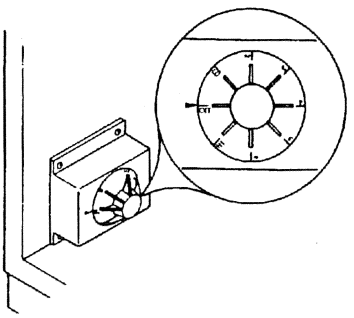

Figure B6

USING A THERMOTRIMMER

The thermotrimmer (fig. B7) is a small refrigeration system you can use to help control and maintain the chamber temperature during high temperature cycles and to cool the chamber during humidity cycles. Some thermotrimmers also control and maintain chamber humidity levels.

The thermotrimmer on your chamber could be turned on automatically by control relays or system events during heating and humidity cycles, or you may need to program it on using an auxiliary relay. See your electrical schematics to find out how the thermotrimmer is wired.

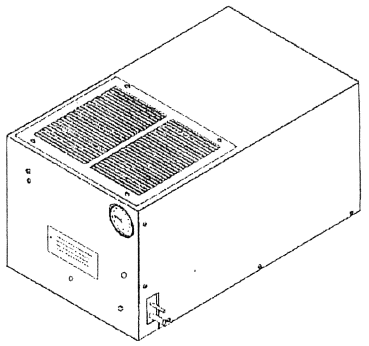

Figure B7

USING A THERM-ALARM®

NOTE: For specific operating instructions, see the *Therm-Alarm® Instruction Manual.*

The Therm-Alarm® protects your product(s) from temperatures that are too high or too low. If it senses a temperature that is too high or low, it produces an audible alarm, shuts the chamber down, and, if necessary, removes power from the product being tested. To remove power from the product, it must be wired through mechanical relay TB4 of the Therm-Alarm®. (See "The Rear Panel Connections" in the Therm-Alarm® manual.)

The Therm-Alarm® thermocouple is on a long wire in the test space (or product carrier). You must place this thermocouple on the product being tested or as near to the product as possible to properly protect it.

WHAT TO DO IF THE CHAMBER DOES NOT OPERATE

WARNING: If you need more service information than is in this manual, get qualified help. Attempting to service the chamber without adequate training can result in death or serious injury to you or others.

WARNING: This manual is not a substitute for electrical or refrigeration training.

CAUTION: Immediately release all reset buttons — do not hold them in. If a switch trips more than once, get qualified help. You must determine what caused the trip before using the chamber. Improper resetting can damage the chamber and product.

Thermotron chambers have safety devices that shut down the chamber when a failure occurs. If a failure is due to a temporary problem, you may only need to reset a safety device to start the chamber again. For more information, refer to "Resetting Safety Switches" on page D3.

Some commonly used safety devices that you can reset are explained below. If your chamber will not start up again after you have tried the suggestions listed below, call the nearest Thermotron field service office. (See the field service office list in the front pocket of this binder.)

- **Therm-Alarms®, System Monitors, and other optional instruments** can prevent the chamber from operating and can be reset by you. (The System Monitor can also tell you what caused the failure.) See the manuals for these instruments for more detailed information.
- Some chambers are equipped with **RESET** buttons with **REFRIGERATION TRIP** lights. If a refrigeration safety switch trips or if the chamber's power is disconnected and restored, the **REFRIGERATION TRIP** light comes on and the chamber will not operate. To restart the chamber, you must correct the trip and press the **RESET** button to reset the system. If the **REFRIGERATION TRIP** light stays on or the chamber continues tripping, get qualified help to correct the problem.
- **High limit switches** (HLS, fig. B8) are on an outer wall or the top of most chambers. If the chamber overheats, the high limit switch shuts down the chamber. After the chamber temperature returns to an acceptable level, press the button on the high limit switch to reset it.

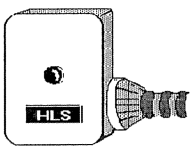

Figure B8

- Some chambers (usually those with LN_2 or CO_2 cooling) are equipped with **low limit switches** (LLS), which trip if the chamber gets too cold. After the chamber temperature has returned to an acceptable level, press the button on the low limit switch to reset it.
- Some chambers are equipped with **door limit switches**, which prevent the chamber from operating when the door is open. Always make sure all chamber doors are closed before operating the chamber unless you have a walk-in chamber designed to be entered while it is operating.
- Most automatic thermal shock (ATS) chambers are equipped with **transfer jam switches**, which shut down the chamber if something interferes with the product carrier's movement. If a jam occurs, instructions for clearing the jam appear on the programmer/controller's screen.

A GUIDE TO THE PREVENTIVE MAINTENANCE INSTRUCTIONS

Follow the preventive maintenance instructions that are checked below. **The instructions that are not checked do not apply to your chamber.** The literature in section F may contain additional preventive maintenance instructions.

- ☑ Safety Instructions ..... i and C2
- ☐ Checking the Vacuum Pump Oil C3

Every Week

- ☑ Checking the R-23 Charge (for chambers with built-in gauges) C3
- ☑ Checking the HP-80 (R-402A), HP-62 (R-404A), AZ-50 (R-507) Charge C4
- ☐ Checking the Nondehumidifying Thermotrimmer Charge C5
- ☐ Checking the Dehumidifying Thermotrimmer Charge C5
- ☐ Cleaning the Air-Cooled Condenser C6
- ☐ Wet-Bulb Sensor Maintenance C6
- ☐ Checking and Replacing the Exposed-Cartridge Demineralizer C7
- ☐ Checking the Canister Type Demineralizer C7
- ☐ Checking and Replacing the Water Filter C8
- ☐ Filling the Air Line Oiler C8

Every Month

- ☐ Testing the Ground Fault Circuit Interrupter (GFCI) C8
- ☐ Checking and Replacing the Air Filter C9

Every Three Months

- ☑ Miscellaneous Checks C9
- ☑ Checking the R-23 Charge (using a refrigeration gauge manifold) C10
- ☑ Checking the HP-80 (R-402A), HP-62 (R-404A), AZ-50 (R-507) Discharge Pressure C11
- ☑ Checking the Oil Level in a Compressor C12
- ☑ Checking the Compressor Oil Pressure C13
- ☐ Flushing the Vapor Generator or Pressurized Steam Generator C14
- ☑ Testing the Chamber High Limit Switch C15
- ☑ Testing Safety Switches C16
- ☐ Checking the Basket Transfer Fluid C16
- ☐ Checking the Altitude System C16

PREVENTIVE MAINTENANCE SAFETY INSTRUCTIONS

Follow all WARNINGS to prevent death or personal injury.



WARNING: To safely perform preventive maintenance, you must read the General Safety Instructions on page i and everything in Section C that is checked on page C1. Before operating the chamber, you must read the instructions in Section B that are checked on page B1.

WARNING: Do not attempt to perform electrical or refrigeration work if you are not qualified. This manual is not a substitute for electrical or refrigeration training.

WARNING: Before performing any maintenance or service, make sure the chamber is not operating unless the instructions state otherwise. Allow the components you are servicing to reach room temperature.

WARNING: Dangerously high voltage is present. Disconnect the electrical power before doing any electrical work.

WARNING: Disconnect the electrical power before working near moving parts. Replace any guards or shields that you remove. Keep fingers away from compressor head fans.

WARNING: The automatic pump-down system can start a compressor at ANY time while the main power is connected.

Follow all CAUTIONS to prevent equipment damage.

CAUTION: See the literature in Section F for more preventive maintenance information.

NOTE: Although at times you MUST disconnect the main power for safety reasons, do not leave it off for longer than necessary. The automatic pump-down system cannot operate when the main power is off and an oil pressure trip may occur when the power is restored.

NOTE: Use the main power disconnect switch to disconnect the electrical power from the chamber. If your disconnect switch is supplied by Thermotron, it is located on the electrical compartment door; put this switch in the OFF position to disconnect the electrical power.

NOTE: Compressors are labeled to indicate which types of refrigerants they contain.

NOTE: The System Monitor can remind you when maintenance is due. If your chamber has a System Monitor, see the System Monitor manual.

CHECKING THE VACUUM PUMP OIL

Suggested Frequency: Every Day

With the vacuum pump running, look at the vacuum pump oil reservoir sight glass. The oil level should be in the middle of the sight glass. If the oil looks dirty, smells burned, or is cloudy from moisture, change the oil according to the instructions in the vacuum pump manual supplied with your chamber.

CHECKING THE R-23 OR R-508B CHARGE (for chambers with built-in refrigeration gauges)

Suggested Frequency: Every Week (The refrigeration system must be at room temperature. If you leave the chamber off at night, check the charge every morning.)

To check the R-23 or R-508B charge, follow this procedure:

1. Make sure the entire R-23 or R-508B refrigeration system is at room temperature. (The system may need to be off for 12 hours or more to reach room temperature.)
2. Make sure the R-23 or R-508B discharge and the suction gauges (fig. C1) show the same pressure. **NOTE:** If your refrigeration gauges have shut-off valves, open the valves while checking the gauges and close them when you are done.
3. Compare the pressure shown on the gauges with the R-23 or R-508B standby pressure shown on the serial tag located on the electrical compartment. If the pressure shown on the gauges is more than 5 psig below the pressure shown on the tag, the system must be charged. Before turning to the charging instructions, check the R-23 or R-508B charge using a refrigeration gauge manifold. (See page C10 for instructions.)

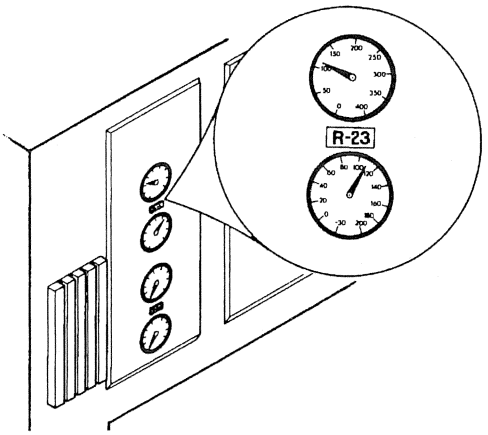

Figure C1

CHECKING THE R-402A, R-404A, OR R-507 CHARGE

Suggested Frequency: Every Week

WARNING: You must operate the chamber to perform this procedure. Do not attempt to operate the chamber unless you have read the instructions in Section B that are checked on page B1.

NOTE: This procedure does not apply to thermotrimmers.

To check the R-402A (HP-80), R-404A (HP-62), or R-507 (AZ-50) charge, follow this procedure:

1. Remove the necessary panels from the machinery section, and find the refrigerant sight glass (fig. C2). The sight glass is located after the filter in the refrigeration line.
2. Remove the cap from the sight glass.
3. Operate the chamber for five minutes at a set point that requires maximum cooling.
4. Check the refrigerant sight glass. If a large amount of bubbles appears in the sight glass, you must charge the system. See the instructions on page D9 in Section D, "Charging the R-402A, R-404A, or R-507 Refrigeration System."
5. If bubbles do not appear in the sight glass and your chamber has a remote air-cooled condenser, check the gauge on the condenser's receiver tank (see fig. C3):
   - If the air temperature is below freezing, the gauge must show at least 20%.
   - If the air temperature is above +70°F (+21°C), the gauge must show 60% to 70%. Never allow the charge to reach 80%.
   - If the air temperature is between freezing and +70°F (+21°C), the gauge must show approximately the same value as the air temperature in degrees Fahrenheit.
6. If the gauge shows less than the above values, the system must be charged. See the instructions on page D9 in Section D, "Charging the R-402A, R-404A, or R-507 Refrigeration System."

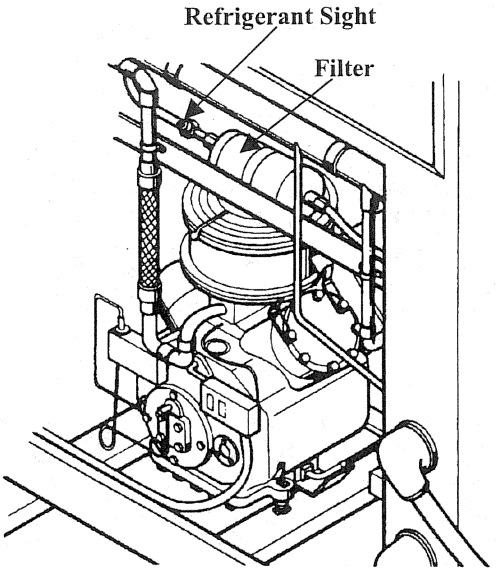

Figure C2

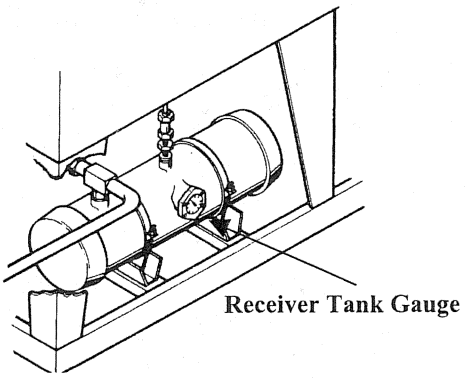

Figure C3

CHECKING THE NON-DEHUMIDIFYING THERMOTRIMMER CHARGE

Suggested Frequency: Every Week

WARNING: You must operate the chamber to perform this procedure. Do not attempt to operate the chamber unless you have read the instructions in Section B that are checked on page B1.

To check the thermotrimmer (fig. C4) charge, follow this procedure:

1. Remove the thermotrimmer's cover and find its refrigerant sight glass. If your thermotrimmer is in the machine section, you must remove a panel from the chamber to find the sight glass.
2. Operate the chamber at a set point of +40°C (+104°F), and allow the chamber to stabilize. Make sure the thermotrimmer is running.
3. Check the refrigerant sight glass on the thermotrimmer. If bubbles appear in the sight glass, you must charge the system. To charge the system, see the instructions on page D12 in Section D, "Charging the Thermotrimmer."

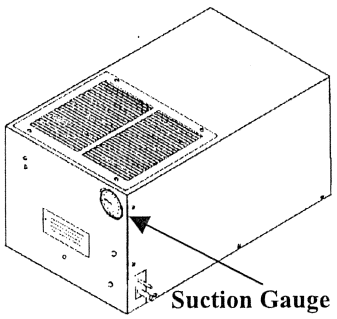

Figure C4

CHECKING THE DEHUMIDIFYING THERMOTRIMMER CHARGE

Suggested Frequency: Every Week

WARNING: You must operate the chamber to perform this procedure. Do not attempt to operate the chamber unless you have read the instructions in Section B that are checked on page B1.

To check the thermotrimmer (fig. C4) charge, follow this procedure:

1. Remove the thermotrimmer's cover and find its refrigerant sight glass. If the thermotrimmer is in the machine section, you must remove a panel from the chamber to find the sight glass.
2. Operate the chamber at a temperature set point of +50°C (+122°F) and a humidity set point of 80% RH. Allow the chamber to reach these set points.
3. Change the set points to +30°C (+86°F) and 20% RH. Make sure the thermotrimmer is running.
4. Allow the thermotrimmer to run for several minutes and check the sight glass. If bubbles appear in the sight glass, you must charge the system. To charge the system, see the instructions on page D12 in Section D, "Charging the Thermotrimmer Refrigeration System."

CLEANING THE AIR-COOLED CONDENSER

Suggested Frequency: Every Week

Check for dirt in the condenser fin coils. If you see dirt, disconnect the condenser's electrical power and either vacuum the dirt out of the coils or use compressed air to blow it out. If you use compressed air, blow the dirt to the outside of the machinery section so it will not become lodged in the coil. Also, check for signs of wear on the condenser.

WET BULB SENSOR MAINTENANCE

Suggested Frequency: Every Week

Wet bulb thermocouple wicks are available from Thermotron. The wicks are fabric tubes with an inside diameter of 1/8 inch. The wet bulb sensor is located on an inner wall of the test compartment.

CAUTION: Thoroughly wash your hands before touching the new wick. Oil from your hands can affect the wet bulb performance.

How to Replace a Wick:

1. Remove the used wick (1). (See cleaning instructions below.)
2. Slide a new wick over the wet bulb thermocouple (2). Make sure the wick completely covers the wet bulb so humidity readings will be accurate, and make sure it is long enough to reach into the wick tube or wick tank.
3. Put the other end of the wick into the wick tube or wick tank (3).

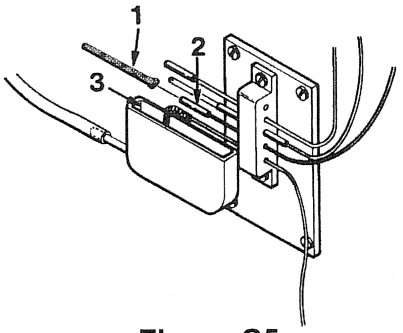

Figure C5

How to Clean a Used Wick:

NOTE: To save time, use two pans. Heat the second pan while the wick is in the first pan.

NOTE: In steps 1 and 2, make sure the wick is well covered with water so the pan will not boil dry. Discard the water when you are finished.

1. Boil the wick in a pan of distilled water for five minutes.
2. Boil the wick in another pan of distilled water for five minutes.
3. Remove the wick and allow it to dry. Store it in a clean container.

CHECKING AND REPLACING THE EXPOSED-CARTRIDGE DEMINERALIZER

Suggested Frequency: Every Week

The demineralizer cartridge color change starts at the top and moves toward the bottom on some demineralizers and starts at the bottom and moves toward the top on others. You must replace the cartridge when all but approximately two inches of the resin has changed color. Replacement cartridges are available from Thermotron Industries.

To replace the demineralizer cartridge, see fig. C6 and follow this procedure:

1. Shut off the water supply to the demineralizer.
2. Loosen the securing nut (2).
3. Remove the used cartridge by pulling the bottom of the cartridge out of its fitting (5).
4. If necessary, place a washer on the top opening of the new cartridge (7), and place a washer (6) on the bottom fitting of the fixture (5). Usually, the washers will remain in the fittings when you remove the used cartridge.
5. Insert the top of the cartridge into the top fitting of the fixture (4), and slide the bottom of the cartridge into the bottom fitting of the fixture (5).
6. Tighten the securing nut (2).
7. Turn the water supply to the demineralizer on and check for leaks.

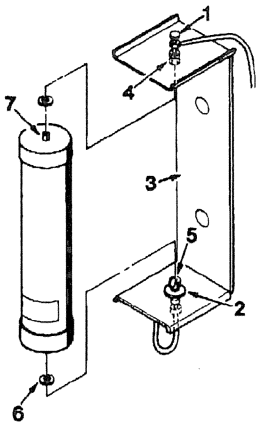

Figure C6

CHECKING THE CANISTER TYPE DEMINERALIZER

Suggested Frequency: Every Week

Check the color of the light on the top of the demineralizer (fig C7). If the color is green, the water purity is acceptable. If the color is red, see the maintenance instructions in the demineralizer manual.

NOTE: If the flow rate is less than one gallon per hour, the color of the light may be red. If the light is red, increase the flow to more than one gallon per hour for five minutes. If the light turns green, the cartridge is good.

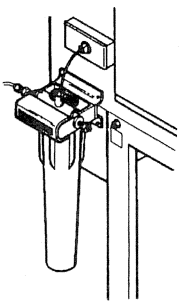

Figure C7

CHECKING AND REPLACING THE WATER FILTER

Suggested Frequency: Every Week

You should replace the water filter whenever it looks dirty as well as whenever you change the demineralizer cartridge to extend the life of the demineralizer.

To change the water filter, follow this procedure:

1. Shut off the water supply to the water purification system by turning off the inlet on the assembly.
2. Use the plastic wrench supplied by Cuno to loosen the filter bowl (1). Unscrew it from the assembly. Be careful — the bowl will be filled with water.
3. Pour out the water and replace the old filter (2) with a new one.
4. Screw the filter bowl (1) back into the assembly and use the Cuno wrench to tighten it.

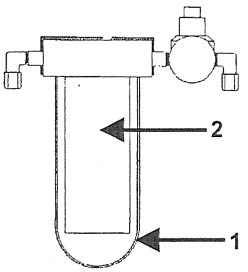

Figure C8

FILLING THE AIR LINE OILER

Suggested Frequency: Every Week

Use Mobil Velocite 10 oil or equivalent to fill the oiler. You may not need to fill the oiler every week, or you may need to fill it more often depending on how much oil your ATS uses. The oiler is located in the air supply line of the basket transfer system.

CHECKING THE GROUND FAULT CIRCUIT INTERRUPTER (GFCI)

Suggested Frequency: Every Month

The ground fault circuit interrupter (GFCI) protects you from electrical shock. One type of GFCI is shown in fig. C9. On most chambers, the GFCI is located inside the console and a GFCI test record chart is on the inside of the console door. The components from which it removes power are listed on your chamber's electrical drawing.

1. Push the **TEST** button on the GFCI and make sure it removes power from the specified instrument(s).
2. Record the test date.
3. Reset the GFCI.

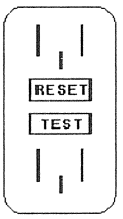

Figure C9

CHECKING AND REPLACING THE AIR FILTER

Suggested Frequency: Every Month (If the element is very dirty, check it more often.)

To check or replace the air filter, follow this procedure:

1. Unpressurize and drain the filter. You may need to drain the filter once a week. **NOTE**: If large amounts of water are always present, the drier could be damaged.
2. Remove the filter bowl and check the filter element. Install a new element if it is dirty.
3. Replace the filter bowl. Do not use a wrench to tighten the filter bowl.

MISCELLANEOUS CHECKS

Suggested Frequency: Every Three Months

WARNING: High voltages that can kill are present. Use extreme caution.

- Check the operating currents of the circulator(s), heaters, compressor(s), and other components. Make sure they match the values on the electrical drawings (±10%). Keep a log of these values so you will see any changes that could indicate the need to service your chamber.
- Disconnect the electrical power and check for loose electrical connections in the electrical compartment and at remote parts of the chamber. Also, check for warping or pitting on contactors.
- Make sure all warning labels are firmly attached and easy to read. New labels are available from Thermotron Industries.
- Check the door seals for rips, cracks, or any sort of deterioration.
- Make sure the circulator fans or blowers are tightly connected to their shafts. Make sure the direction of rotation is correct.
- Make sure the instrument sensor(s) are positioned in the strongest air flow for accurate temperature and humidity readings.
- On chambers with mechanical refrigeration, check for corrosion or abrasion on refrigeration lines, including the small lines attached to gauges and switches. Check the compressor(s) for loose or broken head fans or mounting springs.

CHECKING THE R-23 OR R-508B CHARGE (using a refrigeration gauge manifold)

Suggested Frequency: Every Three Months

You will need:

- One refrigeration gauge manifold
- Two charging hoses
- One refrigeration wrench
- One flare wrench
- One crescent wrench

WARNING: Do not attempt to check the charge if you are not a qualified refrigeration technician. You could seriously injure yourself or damage the chamber.

WARNING: This manual is not a substitute for electrical or refrigeration training.

CAUTION: This is a static procedure. Make sure the chamber is off and the refrigeration system is a room temperature before you check the charge.

To check the R-23 or R-508B charge, follow this procedure:

1. Shut off the R-23 or R-508B refrigeration system and allow it to reach room temperature. The system may need to be off for 12 hours or more to reach room temperature.
2. Connect hoses from the suction and discharge gauges on the manifold to the R-23 or R-508B suction service valves.
3. Open both of the manifold valves and allow the pressure to equalize.
4. Make sure the discharge gauge and the suction gauge show the same pressure.
5. Compare the pressure shown on the manifold gauges to the R-23 or R-508B standby pressure shown on the serial tag located on the electrical compartment.
   - If the pressure shown on the gauges is more than five psig below the pressure shown on the serial tag, you must charge the system. To charge the system, leave the manifold attached and turn to the instructions on page D11 in Section D, "Charging the R-23 or R-508B Refrigeration System."
   - If the system does not need to be charged, turn the valve stems of the service valves completely counterclockwise, remove the hoses, and replace the caps.

CHECKING THE R-402A, R-404A, OR R-507 DISCHARGE PRESSURE

Suggested Frequency: Every Three Months

WARNING: You must operate the chamber to perform this procedure. Do not operate the chamber unless you have read the instruction in Section B that are checked on page B1.

Air-Cooled Chambers with Gauges:

The chamber should be performing a pull-down when you check the discharge pressure. If your chamber has built-in refrigeration gauges, check the pressure on the discharge gauge and compare it to the temperature/pressure saturation chart.

NOTE: To find the correct pressure on the chart, add 20°F to the actual ambient temperature, and use this adjusted temperature when checking the chart.

Air-Cooled Chambers without Gauges:

If your chamber does not have built-in gauges, you will need to use a refrigeration gauge manifold:

1. Connect a hose between the discharge gauge and discharge service valve.
2. Open the manifold gauge and read the pressure.
3. Compare it to the pressure on the temperature/pressure saturation chart. To find the correct pressure, you need to add 20°F to the actual ambient temperature and use this adjusted temperature when checking the chart.

Water-Cooled Chambers:

If you have a water-cooled system, your system must have one of the following pressures:

- R-402A (HP-80) systems must be 235 psig ±10 psig.
- R-404A (HP-62) systems must be 220 psig ±10 psig.
- R-507 (AZ-50) systems must be 215 psig ±10 psig.

If the discharge pressure is incorrect, you must determine the cause. Possible causes for incorrect discharge pressure include:

- Refrigerant overcharge or undercharge
- Failure of a fan motor
- Buildup of dirt or scaly deposits in the condenser
- Water flow through condenser too low
- Condenser water supply too warm
- Lack of air flow due to too little space around the chamber
- Dirty condenser fin coils

On a water-cooled system, you can adjust the discharge pressure with the condenser's water control valve. Increasing the flow decreases the pressure, and decreasing the flow increases the pressure.

CHECKING THE OIL LEVEL IN A COMPRESSOR

Suggested Frequency: Every Three Months

WARNING: You must operate the chamber to perform this procedure. Do not attempt to operate the chamber unless you have read the instructions in Section B that are checked on page B1.

To check the oil level, follow this procedure:

1. Remove the necessary panel on the machinery section and find the oil sight glass on the compressor. If your chamber has a black (Copeland) compressor, see fig. C10. If your chamber has a green (Carlyle) compressor, see fig. C11.
2. Operate the chamber at a set point that requires maximum cooling.
3. Make sure the oil is at the correct level in the sight glass.
   - For black (Copeland) compressors, the oil should fill half of the sight glass.
   - For green (Carlyle) compressors, the oil should fill 1/8 to 3/8 of the sight glass.

   If the oil level is low, add oil according to the instructions on page D7 in Section D, "Adding Refrigeration Oil."
4. Replace any panels you removed.

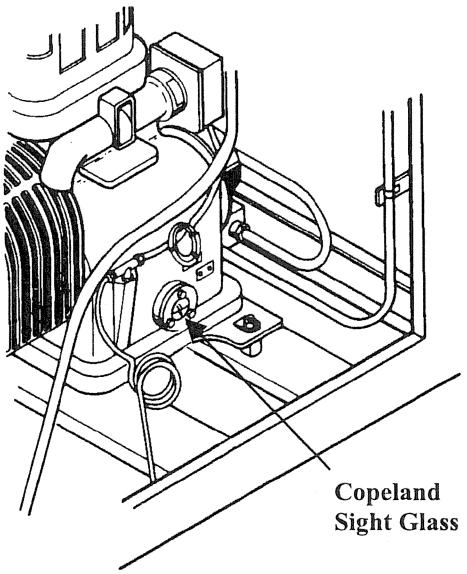

Figure C10

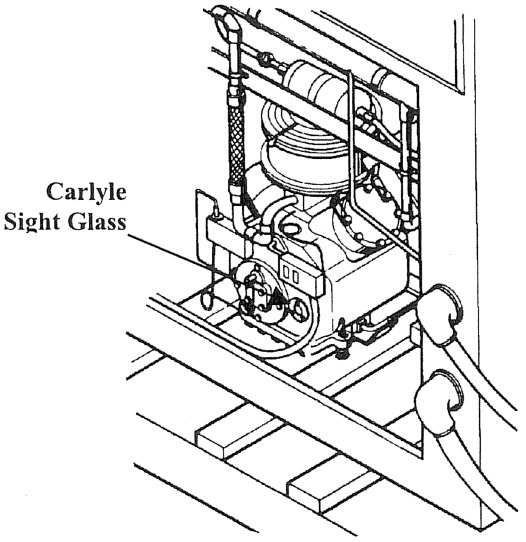

Figure C11

CHECKING THE COMPRESSOR OIL PRESSURE

Suggested Frequency: Every Three Months

You will need:

- Two refrigeration gauge manifolds (if only one gauge manifold is available, you can use the high pressure gauge to read the pressure on the oil pump)
- Two charging hoses (one of the hoses must have a schrader valve fitting)
- One refrigeration wrench
- One flare wrench
- One crescent wrench

WARNING: You must operate the chamber to perform this procedure. Do not attempt to operate the chamber unless you have read the instructions in Section B that are checked on page B1.

To check the oil pressure, follow this procedure for each compressor:

1. Remove the necessary panels to allow access to the compressor.
2. Connect a hose from the suction gauge on one of the manifolds to the suction service valve.
3. Connect a hose from the suction gauge fitting on the other manifold to the schrader valve on the oil pump.
4. Open the suction manifold valves.
5. Operate the chamber at a set point that requires maximum cooling.
6. Compare the pressures on the two gauges that you connected:
   - On black (Copeland) compressors, the gauge attached to the oil pump must show 40 to 45 psig above the gauge attached to the suction service valve.
   - On green (Carlyle) compressors, the gauge attached to the oil pump must show 15 to 20 psig above the gauge attached to the suction service valve.
7. If the pressure difference is not within the range shown above, you must determine the cause. (Low oil level is a possible cause.) Do not operate the chamber until the problem is corrected.

   If the oil pressure is acceptable, stop operating the chamber, remove the hoses, and replace any valve caps you removed.
8. Replace any panels you removed.

FLUSHING THE VAPOR GENERATOR OR PRESSURIZED STEAM GENERATOR

Suggested Frequency: Every Three Months

WARNING: Pressurized steam generators contain hot, pressurized water. Make sure the DRAIN valve is connected to a drain pipe. Keep clear of the drain pipe's opening when opening the DRAIN valve.

To flush the vapor generator or pressurized steam generator, follow this procedure:

1. Remove the necessary panel(s) from the machinery section, and find the vapor generator or pressurized steam generator tank (1, fig. C12). Note that on some walk-in chambers, the vapor generator tank is mounted on back of the chamber. Your chamber's assembly drawing will show the tank if it is mounted on the back of the chamber.
2. Close the FILL valve (2, fig. C12) on the line entering the tank.
3. Open the DRAIN valve (3, fig. C12) on the line leaving the tank.
4. When almost all the water has drained out, open the FILL valve.
5. Use the programmer/controller's manual mode to operate the chamber at +25°C and 2% RH. If needed, see the programmer/controller manual.
6. Allow the tank to flush for at least two minutes, and then close the DRAIN valve. Leave the FILL valve open.
7. With the chamber running, allow the vapor tank to fill for 20 to 30 minutes before using the humidity system. If you try to humidify the chamber when the tank is empty or low on water, the system will trip.
8. Replace any panels removed.

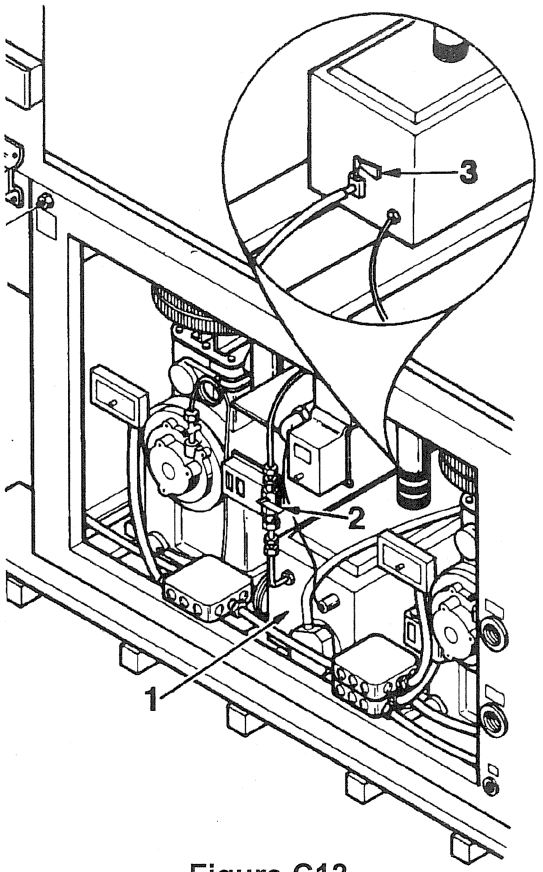

Figure C12

TESTING THE CHAMBER HIGH LIMIT SWITCH (HLS)

Suggested Frequency: Every Three Months

WARNING: **You must operate the chamber to perform this procedure. Do not attempt to operate the chamber unless you have read the instructions in Section B that are checked on page B1.**

CAUTION: To prevent damage to products, do not test the HLS while a product is in the chamber.

NOTE: If you have a thermal shock chamber, perform this procedure for the HLS of each compartment.

To check the high limit switch (HLS), follow this procedure:

1. Make sure the test space is at room temperature. Find the HLS (fig. C13). The HLS may be mounted on the top of the test compartment or on an outer wall.
2. Remove the cover of the HLS. The cover is held by one screw.
3. In the center of the HLS is a hexhead screw attached to a plunger. As the chamber heats, the plunger pushes the screw out. If the head of the screw moves out far enough to touch the contact plate, the HLS trips. Note the distance between the head of the screw and the contact plate while the test space is at room temperature.

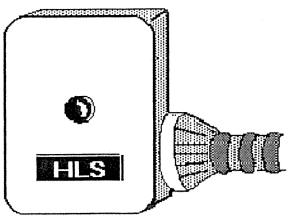

Figure C13

4. Heat the chamber to the highest allowable temperature. See the temperature range for your chamber on page iv. (The temperature range is different for the hot and cold compartments on thermal shock chambers.) If you have a Therm-Alarm® or other temperature protection instrument, set it or disable it so it will not shut the chamber down while you are testing the HLS.
5. Check to make sure the plunger of the HLS pushes the screw closer to the contact plate as the chamber heats. When the chamber has been at its highest temperature for half an hour, the screw should almost be touching the contact plate.
6. With a small screwdriver, carefully push the plunger screw against the contact plate. The HLS should trip and the chamber should stop operating.
7. If the HLS does not operate normally, fix or replace it before using the chamber.
8. Replace the cover of the HLS. Push the reset button on the HLS. If necessary, reset the limits on the Therm-Alarm® or other product protection instrument.

TESTING SAFETY SWITCHES

Suggested Frequency: Every Three Months

NOTE: **Test safety switches one at a time. Testing more than one may make a switch appear to be working when it is not.**

NOTE: Table 1 on page D4 in Section D contains a list of common safety switches. Check your electrical drawings and your chamber to see which ones are on it. You should also look at the drawings to find out if it has any switches that are not listed in the table.

To test a switch, set it so it will trip under normal operating conditions, and operate the chamber with no load. For example, to test a low limit switch, raise the limit of the switch so it is within the chamber's normal operating range, and program the chamber to perform a pull-down. If the switch is working, it should trip and shut the chamber down when the chamber temperature reaches the setting on the switch.

If the switch is not working, replace it. Replacement switches are available from Thermotron Industries.

CHECKING THE BASKET TRANSFER FLUID

Suggested Frequency: Every Three Months

Operate the basket transfer system so the piston is fully extended. Check the sight glass on the reservoir of the basket transfer piston, and make sure the fluid level is near the top of the sight glass. If needed, add General Motors Dextron II ATF or equivalent. (Chambers built before 1990 may contain 3G refrigeration oil instead of ATF.)

CHECKING THE ALTITUDE SYSTEM

Suggested frequency: Every Three Months

- Check the door and port seals for rips or tears. If the seals are dry, coat them lightly with vacuum grease.
- Check the motor cups on the chamber circulator. Fill the lower cup with Dextron II or equivalent automatic transmission fluid until it appears in the upper cup.
- Run the chamber at a high altitude setting. Check the manual dive valve for air bleeds. Check for other leaks in the vacuum system.
- Check the vacuum pump manual supplied with your chamber for additional maintenance procedures.

A GUIDE TO THE SERVICE INSTRUCTIONS

This section contains instructions for some common service procedures; for professional service help contact the nearest Thermotron field service office. **The instructions that are not checked do not apply to your chamber.**

- ☑ Safety Instructions ..... i and D2
- ☑ Resetting Safety Switches D3
- ☑ Replacing Heat Links D5
- ☐ Cleaning the Flowmeter D6
- ☑ Adding Refrigeration Oil D7
- ☑ Recovering Used Refrigerant D8
- ☑ HP-80 and HP-62 Special Charging Instructions D8
- ☑ Charging the __ *HP-80 (R-404A)* ✓ *HP-62 (R-404A)* __ *AZ-50 (R-507)* Refrigeration System ... D9
- ☑ Charging the R-23 Refrigeration System D11
- ☐ How to Charge the Thermotrimmer _____ Refrigerant D12
  __ *Dehumidifying* __ *Non-dehumidifying*
- ☐ _____
- ☐ _____

SERVICE SAFETY INSTRUCTIONS

Follow all WARNINGS to prevent death or personal injury.



WARNING: **To safely service the chamber, you must read the General Safety Instructions on page i and everything in Section D that is checked on page D1. Before operating the chamber, you must read the instructions in Section B that are checked on page B1.**

WARNING: **When working with a refrigerant, follow all safety instructions on the refrigerant container.**

WARNING: **Do not perform electrical or refrigeration work if you are not qualified. This manual is not a substitute for electrical and refrigeration training.**

WARNING: **Before performing any maintenance or service work, make sure the chamber is not operating unless the instructions state otherwise. Allow the components you are servicing to reach room temperature.**

WARNING: **Dangerously high voltage is present. Disconnect the electrical power before doing any electrical work.**

WARNING: **The automatic pump-down system can start a compressor at ANY time while the main power is connected.**

WARNING: **Disconnect the electrical power before working near moving parts. Replace any guards or shields that you remove. Keep fingers away from compressor head fans.**

Follow all CAUTIONS to prevent equipment damage.

CAUTION: Avoid overcharging refrigeration systems.

CAUTION: You must be electrically grounded if you service static-sensitive components.

CAUTION: You must add Thermotech fluid to the R-23 or R-508B refrigeration system if you evacuate it, change the oil in the compressor, or replace the compressor. For more information, call the nearest Thermotron field service office.

NOTE: Although at times you MUST disconnect the main power for safety reasons, do not leave it off longer than necessary. The automatic pump-down system cannot operate when the main power is off and an oil pressure trip may occur when the power is restored.

NOTE: The main power disconnect switch removes electrical power from the chamber. If your disconnect switch is supplied by Thermotron, it is located on the electrical compartment door. The OFF position to disconnect the electrical power.

NOTE: Compressors are labeled to indicate which types of refrigerants they contain.

NOTE: For more service information, see the OEM (original equipment manufacturer's) literature in Section F.

RESETTING SAFETY SWITCHES

Safety switches shut systems down if the system conditions exceed the switch limits.

- **Automatic-reset** switches reset themselves when the cause of the trip is corrected.
- **Manual-reset** switches must be reset by you. To reset a manual-reset switch, push the button (1, fig. D1) or tab on the switch after the cause of the trip is corrected.

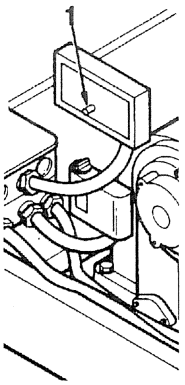

Figure D1

Some commonly used manual-reset switches are shown in Table 1 on page D4.

CAUTION: Do not hold reset switches in — release them immediately. If a switch continues tripping, find and correct the cause before using the chamber. Improper resetting can result in damage to the chamber and the product.

NOTE: System Monitors can monitor certain safety switches. See the configuration sheet and manual for more information.

NOTE: Some switches need to cool down or heat up before they can be reset.

NOTE: Therm-Alarms®, System Monitors, and other optional instruments can also act as safety switches. See the manuals for these instruments if necessary.

Some chambers have **REFRIGERATION TRIP** lights and **RESET** buttons. The **TRIP** light illuminates when a refrigeration safety switch trips. If your chamber has a **TRIP** light and **RESET** button, follow this procedure if the light is lit:

1. Press the **RESET** button on the electrical compartment door. Go to step 2 only if the **REFRIGERATION TRIP** light stays on.
2. Press the reset button on a manual-reset refrigeration safety switch.
3. Press the **RESET** button on the electrical compartment door.
4. If the **REFRIGERATION TRIP** light stays on, repeat steps 2 and 3, resetting a different switch each time until the **REFRIGERATION TRIP** light stays off.
5. Record which switch was at fault.

TABLE 1

MANUAL-RESET SWITCH	COMMON ABBREVIATION	LOCATION	REASON FOR TRIPPING
Circulator overload switch	OLR	Electrical equipment	Too much current to the circulator
Vacuum motor overload switch	V-OLR	Electrical compartment (altitude chambers	Too much current to the vacuum pump
High limit switch	HLS	Externally mounted	Chamber temperature too high
Low limit switch	LLS	Externally mounted	Chamber temperature too low
Humidity heat limit switch	HLS	Machinery section (humidity chambers)	Vapor generator too high
Oil pressure switch	OPS	Machinery section	Compressor oil pressure too high
High pressure switch*	HPS	Machinery section	Refrigerant pressure too high
Low pressure switch*	LPS	Machinery section	Refrigerant pressure too high
Refrigerant temperature switch*	TS	Machinery section	Refrigerant pressure too high
Ground fault circuit interrupter	GFCI	Inside console	Electrical current traveling to ground

* Automatic-reset type when used with a System Monitor.

REPLACING HEAT LINKS

Heat links remove power from the heating coils if the temperature at the heating coils is too high. If one or more heat links are "blown," the chamber will heat slowly or will not heat at all. Usually, heat links blow because of a lack of sufficient air flow from the circulator(s). Blown heat links must be replaced; they are located by the heaters in the conditioning plenum.

To replace heat links, follow this procedure:

1. Disconnect the electrical power from the chamber. Allow the entire chamber to reach room temperature.
2. Remove any control sensors from the baffle covering the plenum.
3. Remove the baffle from the plenum to expose the heat links.
4. Check for blown heat links. See fig. D2. If a heat link is blown, follow this procedure:
   a. Loosen the two nuts (1) that hold the heat link.
   b. Remove the blown heat link.
   c. Install a new heat link.
   d. Tighten the two nuts.
5. Replace the baffle that you removed.
6. Attach the control sensors to the baffle.
7. Connect the electrical power.

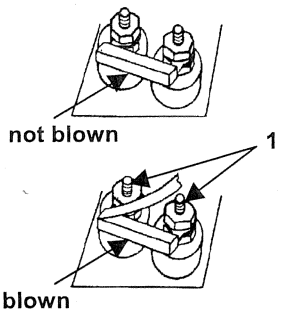

Figure D2

CLEANING THE FLOWMETER

If a flowmeter (fig. D3) becomes dirty, follow this procedure to clean it:

1. Make sure the flowmeter is unpressurized.
2. Remove the valve knob (1) by turning it counterclockwise as far as possible and gently pulling it straight out.
3. Remove the four mounting screws located on the sides of the flowmeter.
4. Gently pull the body of the flowmeter straight away from the back plate.
5. Remove the cap (2) from the top of the flowmeter. To do so, put a screwdriver in the notch (3) and push gently in the direction of the arrow to slide the cap off
6. With an Allen wrench, remove the plug ball stop from the top of the flowmeter.
7. Turn the flowmeter upside down over your hand to catch the float when it falls out.
8. Clean the flowmeter using only a mild solution of pure soap and water. Other cleaners may damage the flowmeter.
9. Replace the float, the plug ball stop, and the flowmeter cap. If the float is cylindrical, you must replace it in the same position in which it was removed. Install the flowmeter body on the chamber and replace the valve knob.

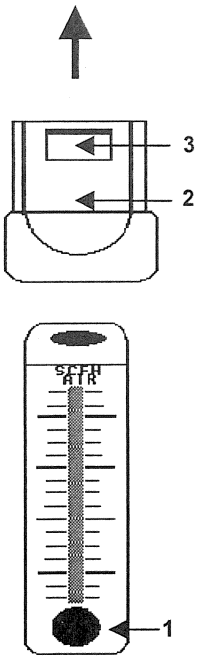

Figure D3

ADDING REFRIGERATION OIL

WARNING: **You must operate the chamber to perform this procedure. Do not attempt to operate the chamber unless you have read the instructions in Section B that are checked on page B1.**

NOTE: To check the oil level, see the instructions on page C12 in Section C, "Checking the Oil Level in a Compressor."

You will need:

- One refrigeration oil hand pump with a schrader valve fitting on the hose
- ATF refrigeration grade oil

To add oil, follow this procedure:

1. Connect the hose of the oil hand pump to the schrader valve on the compressor oil pump. Leave this connection loose, so you can purge the air from the hose.
2. Put the hand pump in the oil, and pump oil until it starts to come out of the hose.
3. Tighten the hose fitting on the schrader valve.
4. Operate the chamber at a set point that requires maximum cooling.
5. Pump oil until the oil is at the correct level in the oil sight glass:
   - For black (Copeland) compressors, the oil must fill half of the sight glass.
   - For green (Carlyle) compressors, the oil must fill 1/8 to 3/8 of the sight glass.
6. Wait several minutes and then check the sight glass again. If necessary pump more oil until the oil level is correct.
7. Stop operating the chamber. Remove the hose from the schrader valve and replace the cap.

RECOVERING USED REFRIGERANT

Any time you need to evacuate a refrigeration system, you must collect the refrigerant. The Clean Air Act prohibits venting it to the air.

You can recover the refrigerant yourself using a commercially-built recovery unit or have a professional do it for you. You may also call our field service engineers to recover the refrigerant for you. You will need to call the Product Support department at the Thermotron main office in Holland, Michigan, at (616) 392-6550 to arrange to have the procedure done.

You can recharge your refrigeration system using the recovered refrigerant as long as it is not contaminated. If the refrigerant is contaminated, you can ship it to Thermotron for disposal, but the contaminated refrigerant will remain your property until it is properly disposed of.

R-402A AND R-404A SPECIAL CHARGING INSTRUCTIONS

CAUTION: R-402A and R-404A must always be transferred to the system as a liquid.

R-402A (HP-80) and R-404A (HP-62) are blends of refrigerants. They do not have constant boiling points and the blend compositions vary as they boil, which results in a temperature variation or temperature glide. Because R-402A and R-404A are blends of refrigerants, they must ALWAYS be transferred into the system as a liquid, not as a vapor.

When you handle R-402A or R-404A, remember the following points:

- Always liquid charge, never vapor charge.
- Charge R-402A and R-404A systems using the sight glass method.
- Keep R-402A and R-404A tightly capped to prevent leaking. If the refrigerants leak, the blend fractionates and will not have the R-402A or R-404A cooling properties.
- Maintain the R-402A compressor's head pressure at 235 psig ±10 psig.
- Maintain the R-404A compressor's head pressure at 220 psig ±10 psig.

CHARGING THE R-402A, R-404A, OR R-507 REFRIGERATION SYSTEM

WARNING: DO NOT attempt to charge your system if you are not a qualified refrigeration service technician. You could kill or seriously injure yourself or damage your chamber.

WARNING: This manual is not a substitute for electrical or refrigeration training.

WARNING: You must operate the chamber to perform this procedure. Do not attempt to operate the chamber unless you have read the instructions checked on page B1.

WARNING: Read the safety instructions on the refrigerant tank.

NOTE: To check the charge, see page C11 in Section C, "Checking the R-402A, R-404A, or R-507 Charge."

NOTE: This procedure does not apply to thermotrimmers.

You will need:

- One refrigeration gauge manifold
- Two charging hoses
- One tank of R-402A (HP-80), R-404A (HP-62), or R-507 (AZ-50) refrigerant for your system
- One refrigeration wrench
- One flare wrench
- One crescent wrench

To charge the system, follow this procedure:

1. Make sure you have the correct refrigerant.
2. Leak check the system. Make sure you repair all leaks before charging the system.
3. Connect a hose from the center fitting of the refrigeration gauge manifold to the refrigerant tank.
4. Connect a hose from the suction gauge on the refrigeration gauge manifold to the suction service valve, and purge the charging hose.
5. Charge the chamber during a pull-down.
   - Always liquid charge R-402A and R-404A. Refer to page D8 for special instructions.
   - Vapor charge R-507.
   - Watch the sight glass. When it is clear (bubble-free) for 10 seconds, shut off your tank of refrigerant.
   - Make sure bubbles do not reappear. If they do, add more refrigerant.

   If your chamber has a remote air-cooled condenser, you must also check the gauge on the condenser's receiver tank. If the gauge shows less than one of the following values, the system must be charged.
   - If the air temperature is less than 0°C (+32°F), the gauge should show approximately 20%.
   - If the air temperature is above +21°C (+70°F), the gauge must show approximately 60% to 70%. It must never show above 80%.
   - If the air temperature is between 0°C (+32°F) and +21°C (+70°F), the gauge must show approximately the same as the air temperature in Fahrenheit.

Procedure continues on next page

6. After you charge the system, make sure the bubbles do not reappear in the sight glass and, if the chamber has a remote, air-cooled condenser, make sure that the gauge shows the correct reading. Add more refrigerant if necessary.
7. Remove the hoses from the compressor and replace the valve caps.
8. Check the compressor amperage to make sure the system is not overcharged. If the system is overcharged, the amperage will be higher than normal.
9. Leak check the system again and repair any leaks.

CHARGING THE R-23 OR R-508B REFRIGERATION SYSTEM

WARNING: **DO NOT attempt to charge your system if you are not a qualified refrigeration service technician. You could kill or seriously injure yourself or damage your chamber.**

WARNING: **This manual is not a substitute for electrical or refrigeration training.**

WARNING: **Read the safety instructions on the refrigerant tank. R-23 or R-508B refrigerant is under very high pressure in the tank. Do not open the outlet valve rapidly.**

CAUTION: This is a static charging procedure. Make sure the chamber is off and the refrigeration system is at room temperature before charging the system.

NOTE: To check the refrigerant charge, see page C10 in Section C, "Checking the R-23 or R-508B Charge."

You will need:

- One refrigeration gauge manifold
- Two charging hoses
- One tank of R-23 or R-508B refrigerant
- One refrigeration wrench
- One flare wrench
- One crescent wrench

To charge the system, follow this procedure:

1. Make sure you have the correct refrigerant.
2. Leak check the system. Make sure you repair all leaks before charging the system.
3. This is a static charging procedure. Disconnect the power to your chamber using the disconnect switch, and allow the chamber to reach room temperature.
4. Connect a hose from the refrigerant tank to the center fitting of the refrigeration gauge manifold.
5. Connect hoses from the suction and discharge gauges on the refrigeration gauge manifold to the suction and discharge service valves.
6. Purge the hoses, and charge the system by adding refrigerant to both the suction and discharge sides at the same time.
7. Wait a few minutes after you charge the system for the pressure to equalize. Read the pressures on the gauges. Both should show the same pressure.
8. Compare the gauge pressure with the standby pressure on the serial tag on the electrical compartment. If it is less than the required pressure, you must add more refrigerant.
9. Remove the hoses from the suction and discharge service valves and replace the valve caps.
10. Check the compressor amperage to make sure the system is not overcharged. If the system is overcharged, the amperage will be higher than normal.
11. Leak check the system again and repair any leaks.

CHARGING THE THERMOTRIMMER

WARNING: DO NOT attempt to charge the thermotrimmer if you are not a qualified refrigeration service technician. You could kill or seriously injure yourself or damage the chamber.

WARNING: This manual is not a substitute for electrical or refrigeration training.

WARNING: You must operate the chamber to perform this procedure. Do not attempt to operate the chamber unless you have read the instructions in Section B that are checked on page B1.

WARNING: Read the safety instructions on the refrigerant tank.

CAUTION: Thermotrimmers can be easily damaged by overcharging.

NOTE: To check the refrigerant charge, see the instructions on page C5 in Section C.

You will need:

- One refrigeration gauge manifold
- Two charging hoses
- One tank of refrigerant for your system (see the thermotrimmer drawing or page D1 to find out what type of refrigerant you need)
- One refrigeration wrench
- One flare wrench
- One crescent wrench

To charge the thermotrimmer, follow this procedure:

1. Make sure you have the correct refrigerant.
2. Leak check the system. Make sure you repair all leaks before charging the system.
3. Connect a hose from the center fitting on the refrigeration gauge manifold to the refrigerant tank.
4. Connect a hose from the suction gauge on the refrigeration gauge manifold to the suction service valve on the thermotrimmer compressor, and purge the hose.
5. Perform one of the two following steps. See page D1 to determine what type of thermotrimmer you have.
   - If you have a non-dehumidifying thermotrimmer, operate the chamber at a temperature set point of +40°C (+104°F).
   - If you have a dehumidifying thermotrimmer, operate the chamber at a temperature set point of +50°C (+122°F) and a humidity set point of 80% RH. Allow the chamber to reach these set points. Change the temperature set point to +30°C (+86°F) and change the humidity set point to 20% RH.
6. Make sure the thermotrimmer is operating. Allow the system to run for several minutes to stabilize.
7. Check the refrigerant sight glass. If bubbles appear in the sight glass, slowly open the outlet valve on the refrigerant tank and keep it open until the bubbles disappear. When the bubbles disappear, immediately close the valve.
8. Make sure the sight glass stays bubble-free for several minutes. If bubbles appear again, add more refrigerant.
9. Stop operating the chamber and the thermotrimmer. Remove the hose and replace the valve cap.
10. Leak check the system again and repair any leaks.

RECOMMENDED SPARE PARTS

To minimize down time, maintain a supply of spare parts. See the parts list in this section to determine the appropriate parts and part (item) numbers.

HIGH USAGE PARTS

- Contactors
- Demineralizer cartridges
- Filter dryers
- Fuses (one full set)
- Heat links
- Solenoids
- Water filters
- Wet bulb thermocouple wicks

LOW USAGE PARTS WITH LONG LEAD TIMES

- Circulator motors
- Special order parts (call the Thermotron Parts Department)

OTHER RECOMMENDED SPARE PARTS

- Bulbs, lights, lamps
- Expansions valves
- Fan blades
- Heaters
- Limit switches
- Pressure switches
- Relays
- Thermocouples
- Thermostats
- Controller boards
- Port plugs
- Sensors

CALLING THERMOTRON FOR ASSISTANCE

At Thermotron, our telephone staff is trained to match your current needs to the proper person or department. To accomplish this, they need the following information:

- Your name
- Name of your company
- Model and serial number of the chamber
- Brief description of the problem, question, or request

Once you obtain this information, contact the Parts and Logistics Department at Thermotron Industries in Holland, Michigan, USA. Telephone (616) 392-6550 between 7:30 a.m. and 5:30 p.m. Eastern Standard (Daylight) Time. The telephone staff person who takes your call will use the above information to determine where to direct your call or how to assist you.

RETURNING MATERIALS

WHAT TO DO IF A PART OR THERMOTRON INSTRUMENT FAILS

1. Contact your local Thermotron Field Service office. A service representative will help you determine the nature of the problem and the proper steps to resolving the problem.
2. To return a part or Thermotron instrument, follow these steps:
   a. Contact the Parts and Logistics department at Thermotron Industries in Holland, Michigan, USA. The telephone number is (616) 392-6550, and the fax number is (616) 393-4549. The hours of operation are 7:30 a.m. to 5:30 p.m. Eastern Standard (Daylight) Time (ES(D)T). Parts and Logistics will authorize return of the material and issue a Returned Material Tag (RMT) number.
   b. Write the name and telephone number of a contact person at your location and the RMT number on the packing list.
   c. Write the RMT number on the outside of the shipping container in a visible location.
   d. Ship all parts FOB (free-on-board) to:

      Thermotron Industries
      836 Brooks Avenue
      Holland, MI 49423
      ATTN: (Issued RMT Number)

NOTE: Thermotron will replace a part under the terms of the warranty at no charge if the defective part is received within 30 days of the issuance of the RMT number. If the part is received after 30 days, Thermotron will invoice the customer for the full cost of the replacement part.

WHAT TO DO IF A NON-THERMOTRON INSTRUMENT FAILS

1. Contact the original equipment manufacturer according to the instructions in the OEM instrument manual. Follow the manufacturer's procedure for replacing the failed instrument.
2. To contract Thermotron to install the instrument at the prevailing rates, contact your local Thermotron Field Service office.

PROGRA.. MEG002 THERMOTRON INDUSTRIES
3/08/94 PAGE 1

PRODUCT STRUCTURE BATCH LISTING
SINGLE EXPLOSION

PARENT	WH	DESCRIPTION	IUM	PS ECN#	QTY
794104	01	OPT HPS16 GPIB	EA	100	1

LEVEL	COMPONENT	WH	OP#	DESIG	QTY/PER	U/M	DWG	DRAWING #
1	820636 CONNECTOR GPIB BULKHEAD F TO F	01	40.00		1.000	EA		CIB24BF L-COM
1	831824 CABLE GPIB BULKHEAT PSEUDO 2M	01	40.00		1.000	EA		
1	843172 ACS 28/48 GPIB VERTI	01	40.00		1.000	EA		475173W

PROGRAM MFG002
10/25/94 PAGE 1

THERMOTRON INDUSTRIES
PRODUCT STRUCTURE BATCH LISTING
SINGLE EXPLOSION

PARENT	WH	DESCRIPTION		IUM	PS ECN#	QTY
842893	01	OPT HPS16 RECORDER	T	EA	100	1

LEVEL	COMPONENT	WH	OP#	DESIG	QTY/PER	U/M	DWG	DRAWING #
1	571455 CAPACITOR PANASONIC	01	40.00		1.000	EA		ECQ-E2A474MW
1	741523 SENSOR YSI RTD 100 OHM PTDIN 3	01	40.00		1.000	EA		S50D-0009
1	798444 RECORDER HONEYWELL 1 CHANNEL T	01	40.00		1.000	EA		SEE BELOW
1	526743 WIRE INST 22GA 105°C 600V *	01	999.00		8.000	FT		10062219(3)VJ

HPS 16 & 60 Wiring Schematic

PROGRA .EG002 — I E R M O T R O N I N D U S T R I E S

3/08/94 PAGE 1 — PRODUCT STRUCTURE BATCH LISTING
SINGLE EXPLOSION

PARENT	WH	DESCRIPTION		IUM	PS ECN#	QTY
794023	01	OPT HPS16 REFRIGERATION	G	EA	100	1

LEVEL	COMPONENT	WH	OP#	DESIG	QTY/PER	U/M	DWG	DRAWING #
1	698091 GAUGE PRESSURE NOSHOK 30"-200#	01	30.00		2.000	EA		25.310.30"
1	698105 GAUGE PRESSURE NOSHOK 0-400#	01	30.00		2.000	EA		25.310.400

PROGRAM MFG002
10/25/94 PAGE 1

THERMOTRON INDUSTRIES
PRODUCT STRUCTURE BATCH LISTING
SINGLE EXPLOSION

PARENT	WH	DESCRIPTION	IUM	PS ECN#	QTY
897485	01	CHAMBER HPS-35 ASSY	EA	23772 C1	1

LEVEL	COMPONENT	WH	OP#	DESIG	QTY/PER	U/M	DWG	DRAWING #
1	529505 BRACKET EXPANSION VALVE 3" LG	01			3.000	EA		2392-18
1	538150 SHAPES HAT SECTION	01			10.000	FT		SK3516
1	544105 VALVE CHECK 7/8 CONN	01			1.000	EA		MS14 6311
1	545446 VALVE RELIEF ATMOSPHERIC 1/4"	01			1.000	EA		5221T-400
1	546350 TUBING STEEL SQUARE	01			12.000	FT		
1	546418 RETURN BEND COPPER SOL-SOL	01			1.000	EA		W-60110 1-1/8
1	546981 TEE RUN BRASS FL-MPT-FL	01			2.000	EA		A4998 1/4"
1	547554 TUBING SILICONE 1/2" OD X 50'	01			10.000	FT		6411-12 3/
1	564882 HANGER BRACKET SETTL BOTH WALL	01			2.000	EA		14207S 2-1/2"
1	564890 HANGER BRACKET STEEL BOTH WALL	01			1.000	EA		14208S 3"
1	621110 BOX & COVER SENSOR TERMINAL *	01			1.000	EA		I2028I2028
1	655643 GUSSET SHELL OUTER LOWER S32	01			1.000	EA	YES	5247-3-10Y
1	656062 ANGLE CROSS TOP OUTER SHELL	01			2.000	EA		5247-3-5Y
1	656097 ANGLE CROSS FRONT LOWER SHELL	01			1.000	EA		5247-3-8Y

THERMOTRON INDUSTRIES
PRODUCT STRUCTURE BATCH LISTING
SINGLE EXPLOSION

PARENT	WH	DESCRIPTION	IUM	PS ECN#	QTY
897485	01	CHAMBER HPS-35 ASSY	EA	23772 C1	1

LEVEL	COMPONENT	WH	OP#	DESIG	QTY/PER	U/M	DWG	DRAWING #
1	656100 ANGLE CROSS REAR LOWER SHELL	01			1.000	EA		5247-3-9Y
1	683221 PLATE TAPPING SHELL 32 AX49-	01			2.000	EA		5247-3-25Y
1	778893 VALVE BALL HENRY 1/2"ODS	01			1.000	EA		900204A 1/2"ODS
1	799009 RUBBER SILICONE SD DUROMETER G	01			10.000	FT		1/16X1X1000 FT
1	803618 VALVE SOLENOID 120/50-60	01			1.000	EA		XUP
1	814814 ANGLE CROSS FRONT - MACH SEC	01			1.000	EA		5247-2-14Y
1	822671 SHELL FLOOR TAPPING PLATE16-32	01			2.000	EA		5247-3-23Y
1	823171 BRACKET DOOR STOP	01			1.000	EA		5247-2-19Z
1	824321 STEEL HOT ROLLED ANGLE	01			13.000	FT		
1	832340 CONSOLE INSTRUMENT ASSY HPS-16	01			1.000	EA	YES	5351-48 B
1	860875 ELBOW CU 1-1/8 90° LG RADIUS	01			2.000	EA		9607-2-2-L
1	896098 BAFFLE FAN HPS-35	01			1.000	EA	YES	5359-8-2B
1	896101 BAFFLE FAN FRONT HPS-35	01			1.000	EA	YES	5359-8-3B
1	896209 LINER ASSEMBLY HPS-35	01			1.000	EA	YES	5359-4-1B
1	896217 LINER BOTTOM HPS-35	01			1.000	EA	YES	5359-4-3B

THERMOTRON INDUSTRIES
PRODUCT STRUCTURE BATCH LISTING
SINGLE EXPLOSION

PARENT	WH	DESCRIPTION	IUM	PS ECN#	QTY
897485	01	CHAMBER HPS-35 ASSY	EA	23772 C1	1

LEVEL	COMPONENT	WH	OP#	DESIG	QTY/PER	U/M	DWG	DRAWING #
1	896225 BRACKET LINER SUPPORT HPS-35	01			2.000	EA	YES	5359-4-4B
1	896233 LINER RH SIDE HPS-35	01			1.000	EA	YES	5359-4-5B
1	896241 LINER LH SIDE HPS-35	01			1.000	EA	YES	5359-4-6B
1	896268 LINER REAR HPS-35	01			1.000	EA	YES	5359-4-7B
1	896276 LINER TOP HPS-35	01			1.000	EA	YES	5359-4-8B
1	896284 LINER BREAKER STRIPS HPS-35	01			1.000	EA	YES	5359-4-2B
1	896322 SHELL CHAMBER ASSY HPS-35	01			1.000	EA	YES	5359-3 B
1	896330 FLOOR SHEET CHMBR SHELL HPS-35	01			1.000	EA	YES	5359-3-10B
1	896349 SHELL RH SIDE HPS-35	01			1.000	EA	YES	5359-3-2B
1	896357 PLATE TAPPING REAR HPS-35	01			1.000	EA	YES	5359-3-14B
1	896365 PANEL CHMBR SHELL REAR HPS-35	01			1.000	EA	YES	5359-3-11B
1	896373 SHEET CHAMBER TOP REAR HPS-35	01			1.000	EA	YES	5359-3-8 B
1	896381 BRACKET MOTOR MTG HPS-35	01			1.000	EA	YES	5359-3-4B
1	896403 SHEET CHAMBER TOP FRONT HPS-35	01			1.000	EA	YES	5359-3-9 B
1	896411 SHELL LH SIDE HPS-35	01			1.000	EA	YES	5359-3-3B

THERMOTRON INDUSTRIES
PRODUCT STRUCTURE BATCH LISTING
SINGLE EXPLOSION

PARENT	WH	DESCRIPTION	IUM	PS ECN#	QTY
897485	01	CHAMBER HPS-35 ASSY	EA	23772 C1	1

LEVEL	COMPONENT	WH	OP#	DESIG	QTY/PER	U/M	DWG	DRAWING #
1	897272 BASE MACH ASSY HPS-35	01			1.000	EA	YES	5359-2 B
1	897590 PANEL REFRIG VALVE MTG HPS-35	01			1.000	EA	YES	5359-3-5 B
1	926388 PLATE SEAM SUPPORT HPS-35	01			2.000	EA	YES	5359-3-6 B
1	926418 PLATE MOTOR TAPPING HPS-35	01			1.000	EA	YES	5359-3-7 B
1	926450 BRKT COIL MTG HPS-35	01			2.000	EA	YES	5359-8-4 B
1	928178 PANEL BASE RH SIDE HPS-35	01			1.000	EA	YES	5359-2-1 B
1	928194 PANEL BASE CTR SIDE HPS-35	01			1.000	EA	YES	5359-2-3 B
1	928208 SUPPORT BASE CTR HPS-35	01			1.000	EA	YES	5359-2-4 B
1	928216 PANEL BASE FRONT HPS-35	01			1.000	EA	YES	5359-2-5 B
1	928240 SHEET FLOOR HPS-35 BASE	01			1.000	EA	YES	5359-2-7 B
1	928259 PAN FLOOR HPS-35 BASE	01			1.000	EA	YES	5359-2-6 B
1	936618 BRACKET REAR PANEL MTG HPS-35	01			1.000	ST	YES	5359-3-12B
1	958840 VALVE EXPANSION 3/8 X 1/2	01			1.000	EA		Y1107-CTE-1
1	896705 SHEET ELECT COMPT REAR HPS	01	10.00		1.000	EA	YES	19-3/4X42-
1	527210 HEATER JUMPER BAR COPPER	01	20.00		6.000	EA		EL131EL131

THERMOTRON INDUSTRIES
PRODUCT STRUCTURE BATCH LISTING
SINGLE EXPLOSION

PARENT	WH	DESCRIPTION	UM	PS ECN#	QTY
897485	01	CHAMBER HPS-35 ASSY	EA	23772 C1	1

LEVEL	COMPONENT	WH	OP#	DESIG	QTY/PER	U/M	DWG	DRAWING #
1	529262 BRACKET BAFFLE ANGLE	01	20.00		4.000	EA		663A
1	529742 BRACKET BULB HEAT LIMIT	01	20.00		1.000	EA		EL-1407 Z
1	534010 THERMOSTAT BUSS HEAT LIMITER	01	20.00		3.000	EA		WUY 460 F
1	536248 BRACKET MOUNTING HEATER	01	20.00		4.000	EA		EL149EL149
1	538318 SENSOR BULB HOLDER	01	20.00		1.000	EA		1552S1552S
1	541912 CLAMP HOSE SS 5-3/8 TO 7	01	20.00		1.000	EA		B104HS
1	544075 WASHER SILICONE H T 1/8"THK	01	20.00		4.000	EA		5/32"ID3/8"OD
1	545510 LATCH 550 COMPLETE PARTS	01	20.00		1.000	EA	YES	550-A W
1	547325 PORT SLEEVE KIT 2"DIAX4" LONG	01	20.00		1.000	EA	YES	5246-10
1	547406 PORT FLANGE ONLY 3 7/8"ID DIA	01	20.00		2.000	EA		5246-10-2-
1	547414 PORT SLEEVE ONLY 4"IDX3 3/4"LG	01	20.00		1.000	EA		5246-10-2-
1	550202 HINGE BUTT 5X5X.180	01	20.00		2.000	EA		1808G SEE5
1	550954 HINGE SHIM-5"	01	20.00		2.000	EA		1808-5-2 H
1	553899 GURAD FAN CHROME PLATED	01	20.00		1.000	EA		511-14" RD
1	556812 GROMMET PLUG 3/4"LG15/64HOLE	01	20.00		1.000	EA		614 15/32"ID

THERMOTRON INDUSTRIES
PRODUCT STRUCTURE BATCH LISTING
SINGLE EXPLOSION

PARENT	WH	DESCRIPTION	IUM	PS ECN#	QTY
897485	01	CHAMBER HPS-35 ASSY	EA	23772 C1	1

LEVEL	COMPONENT	WH	OP#	DESIG	QTY/PER	U/M	DWG	DRAWING #
1	558742 INSULATION FIBERGLASS 2X2X48	01	20.00		30.000	EA		SG26 OLD #
1	564459 RECEPTACLE, TWO PIECE BRASS	01	20.00		1.000	EA		292BIR CIRCLE-F
1	579987 PLATE MOTOR MOUNTING BL PHENLC	01	20.00		1.000	EA		621A
1	598631 BRACKET MOUNTING HEAT LINK	01	20.00		1.000	EA		EL148EL148
1	602930 RUBBER SILICONE 50 DUROMETER G	01	20.00		.600	SF		9255 1/32 THICK
1	614246 SHAPES ANGLE 1"X1" SS	01	20.00		7.000	FT	YES	SK3521 Z
1	628891 PORT FEED THRU ASSY 7/8IDX4.5"	01	20.00		3.000	EA		809-2-3Z
1	648388 LAMP INSIDE FROSTED 120V 75W	01	20.00		1.000	EA		75A-17/67/SS
1	687588 VENT ASSY LN2-GN2 FLAPPER	01	20.00		1.000	EA		818Z
1	690538 PORT FEED THRU ASSY 1.870	01	20.00		2.000	EA		876-7Y
1	711918 MOTOR BALDOR .75HP 15-1/4" SHA	01	20.00		1.000	EA		35L266-86
1	811254 DRIP PAN FOR SM32	01	20.00		1.000	EA		5247-27-12
1	813710 LATCH ADJ GRIP SOUTHCO 1/4HEX	01	20.00		1.000	EA		E3-66-45
1	813729 HINGE OFFSET KNUCKLE RH	01	20.00		2.000	EA		96-10-510-50
1	813737 LATCH MAGNETIC SOUTHCO	01	20.00		2.000	EA		02-10-101-10

THERMOTRON INDUSTRIES
PRODUCT STRUCTURE BATCH LISTING
SINGLE EXPLOSION

PARENT	WH	DESCRIPTION	IUM	PS ECN#	QTY
897485	01	CHAMBER HPS-35 ASSY	EA	23772 C1	1

LEVEL	COMPONENT	WH	OP#	DESIG	QTY/PER	U/M	DWG	DRAWING #
1	841137 GASKET NEOP 1/8TH CR-60 F/VENT	01	20.00		1.000	EA		818-1
1	841501 FAN BLD KAV 14"26°3BL 1/2B CCW	01	20.00		1.000	EA		60980001
1	872202 FIN COIL	01	20.00		2.000	EA		R-5210-5
1	879134 GASKET VINYL OUTER 50.38X49.88	01	20.00		1.000	EA		1050-011
1	879142 GASKET SILICN IN 42.62IDX42.12	01	20.00		1.000	EA		5359-4-14Y
1	526301 CONDENSER CASCADE 3HP	01	30.00		5.000	EA		R2235
1	545438 VALVE RELIEF 3/8 MPT 3/8 FLARE	01	30.00		1.000	EA		5231T-400
1	549018 VALVE ROTOLOCK HORZ 3/8" FLARE	01	30.00		1.000	EA		27717-P
1	549042 VALVE ROTOLOCK HORZ 7/8" IDS	01	30.00		1.000	EA		24218-P
1	549344 VALVE SOLENOID 120/60 1/2"SOL	01	30.00		2.000	EA		XRN-1/2 ODF
1	549425 VALVE SOLENOID 1/4" 120/50-60	01	30.00		1.000	EA		A3-F1
1	549433 VALVE SOLENOID 3/8" 120/50-60	01	30.00		1.000	EA		B6-F1 WITH COIL
1	549468 VALVE SOLENOID 5/8" 120/50-60	01	30.00		1.000	EA		B14-S2
1	552957 VIBRATION ELIMINATOR 1-1/8	01	30.00		2.000	EA		1010FX PIN 210171
1	559242 SWITCH PRESSURE OPENS-LOWSPST	01	30.00		1.000	EA		P70-AB-43D

THERMOTRON INDUSTRIES
PRODUCT STRUCTURE BATCH LISTING
SINGLE EXPLOSION

PARENT	WH	DESCRIPTION	IUM	PS ECN#	QTY
897485	01	CHAMBER HPS-35 ASSY	EA	23772 C1	1

LEVEL	COMPONENT	WH	OP#	DESIG	QTY/PER	U/M	DWG	DRAWING #
1	559986 DISTRIBUTOR REFRIGERANT 6 682	01	30.00		2.000	EA		7-4-10
1	562715 FILTER SUCTION 5/8 CONN	01	30.00		1.000	EA		SF285T
1	562766 FILTER-DRIER 1/2" FLARE	01	30.00		1.000	EA		C414
1	564890 HANGER BRACKET STEEL BOTH WALL	01	30.00		14.000	EA		14208S 3"
1	569205 SWITCH PRESSURE OIL 90 SE	01	30.00		2.000	EA		P45NBA-6
1	575787 VALVE LINE 1-1/8	01	30.00		1.000	EA		F55102
1	577801 TUBING COPPER CAPILLARY .080"	01	30.00		3.000	FT		TC-80
1	578182 VALVE PRESSURE REG 7/8"W/STRNR	01	30.00		1.000	EA		X30-ORI6-80/325
1	580225 VALVE EXPANSION 1/2 X 7/8	01	30.00		1.000	EA		CSFE-5-0/30
1	740586 EXCHANGER HEAT	01	30.00		1.000	EA		R2243Z
1	750786 VALVE RELIEF 1/4"NPT 195PSI	01	30.00		1.000	EA		5221T-195#
1	770515 COMPRESSOR SOLID MTG PAD CARLY	01	30.00		8.000	EA		30HR070107
1	774138 BRACKET TANK	01	30.00		2.000	EA		16B
1	829064 DRIP PAN COMPRESSOR PLASTIC	01	30.00		2.000	EA		892X
1	845094 MOUNT RUBBER VIBRATION	01	30.00		8.000	EA		633A-130

PROGRAM MFG002
10/25/94 PAGE 9

THERMOTRON INDUSTRIES
PRODUCT STRUCTURE BATCH LISTING
SINGLE EXPLOSION

PARENT	WH	DESCRIPTION	IUM	PS ECN#	QTY
897485	01	CHAMBER HPS-35 ASSY	EA	23772 C1	1

LEVEL	COMPONENT	WH	OP#	DESIG	QTY/PER	U/M	DWG	DRAWING #
1	851744 RAILS COMPRESSOR MACH SECT 841	01	30.00		2.000	EA		841-10X
1	911585 TANK VAPOR	01	30.00		1.000	EA		R-2575(Z)
1	949280 SEPARTOR OIL HIGH EFFICIENCY	01	30.00		1.000	EA		S-5188D
1	972843 VALVE EXPANSION R23 1/2X5/8 CU	01	30.00		1.000	EA		SGE-2-GP
1	984868 VALVE EXPANSION R404A 3/8X1/2	01	30.00		1.000	EA		CSE-4-C
1	533723 THERMOSTAT UE 100-+400 SET 375	01	40.00		1.000	EA		F54G12288MANUAL
1	544240 CONNECTOR 14/-1/0	01	40.00		1.000	EA		FT105 U/K
1	553090 TERMINAL BLOCK CURTIS 8 HOLE	01	40.00		1.000	EA		E8
1	561700 BOX HANDYBOX GALV APPLETON	01	40.00		1.000	EA		4CS-1/2 4X1 7/8
1	566397 RESISTOR OHMITE 2500 OHM 12W	01	40.00		3.000	EA		B12J2K5 13F155
1	571110 BLOCK DISTRIBUTION POWER MARAT	01	40.00		1.000	EA		1423570
1	720313 SWITCH ROCKER CARLING SPST	01	40.00		2.000	EA		TGA0511TBB
1	751707 PLATE SWITCH 4800/6800	01	40.00		1.000	EA		2980Z
1	554720 PORT PLUG FUSED POLY 7502 MAT	01	45.00		1.000	EA		600 2-1/4" DIA
1	554747 PORT PLUG FUSED POLY 7502 MAT	01	45.00		1.000	EA		600 4-1/4" DIA

THERMOTRON INDUSTRIES
PRODUCT STRUCTURE BATCH LISTING
SINGLE EXPLOSION

PARENT	WH	DESCRIPTION	IUM	PS ECN#	QTY
897485	01	CHAMBER HPS-35 ASSY	EA	23772 C1	1

LEVEL	COMPONENT	WH	OP#	DESIG	QTY/PER	U/M	DWG	DRAWING #
1	556413 LABEL NAMEPLATE DIECAST 8-5/8"	01	45.00		1.000	EA		2952 1-5/8
1	563096 LABEL SERIAL # (T-TRON EQUIP)	01	45.00		1.000	EA		X1936A #2965
1	563118 LABEL MODEL # (T-TRON EQUIP)	01	45.00		1.000	EA		X1165 #2955
1	563967 LATCH SCREW SOUTHCO KNRLD HD	01	45.00		6.000	EA		17-13-914-11
1	563975 LATCH RETAINER WASHER FOR #17	01	45.00		6.000	EA		17-10014-12
1	563983 LATCH SPEED NUT RIVET TYPE	01	45.00		6.000	EA		17-10015-14
1	534045 GASKET NEOP EDGE ANGLE 40DURO	01	999.00		13.000	FT		

T R M O T R O N I N D U S T R I E S
PRODUCT STRUCTURE BATCH LISTING
SINGLE EXPLOSION

PARENT	WH	DESCRIPTION	IUM	PS ECN#	QTY
956228	01	OPT HPS 4800 CONTROL PKG	EA	B1	1

LEVEL	COMPONENT	WH	OP#	DESIG	QTY/PER	U/M	DWG	DRAWING #
1	151008 THERMOCOUPLE R-W 6TEFLON 20 AW	01			2.000	EA		151008
1	716693 RELAY SOLID STATE 3A 3-32L 3A	01			7.000	EA		MP120D4 OPTO 22
1	732419 CABLE ASSY INT 2800-4800 I/O-4	01			1.000	EA		471770-4 A
1	749540 CABLE ASSY 10 COND SHLD F/R 4F	01			2.000	EA		472459-1X
1	774758 FERRITE BEAD 1" O.D. .5" I.D.$	01			2.000	EA		2643102002
1	790796 PCB ASSY 4800 FUNCTION (MINUS	01			1.000	EA		471789
1	812773 ACS 28/48 MAIN 1CH PSEUDO	01			1.000	EA		799440
1	813311 ACS 8EVENT SSR&CAP PSEUDO	01			2.000	EA		ACS 799424
1	815160 PCB ASSY 4800 MULTI-OPTION BD	01			1.000	EA		474348W
1	820148 CABLE ASSY M-M 6' SHLD D-SUB	01			1.000	EA		474451X
1	955817 ACS 4800 KEYBOARD B&W PSEUDO	01			1.000	EA		955779

PROGRAM MFG002
7/14/94 PAGE 1

THERMOTRON INDUSTRIES
PRODUCT STRUCTURE BATCH LISTING
SINGLE EXPLOSION

PARENT	WH	DESCRIPTION	IUM	PS ECN#	QTY
898988	01	OPT HPS-35 WATER COOLED	EA	100	1

LEVEL	COMPONENT	WH	OP#	DESIG	QTY/PER	U/M	DWG	DRAWING #
1	528800 DESUPERHEATER	01			1.000	EA		R2804 15&2
1	551500 COUPLING STEEL 1-1/4	01			2.000	EA		AAR300-1-1/4"
1	936596 BRKT REFRIG TANK SUPPORT HPS35	01			1.000	EA	YES	5359-2-16B
1	984841 VALVE EXPANSION R404A 5/8X7/8	01			1.000	EA		OSE-6-ZP
1	542919 ADAPTER CU 1-3/8X1-1/4 ADAPT	01	30.00		4.000	EA		W-1171 SOL-MPT
1	545411 VALVE RELIEF 3/8 MPT 3/8 FLARE	01	30.00		1.000	EA		5231-350
1	545926 VALVE WATER TEMP 103° 3/8"	01	30.00		1.000	EA		V47-AA-3
1	545950 VALVE WATER PRESSURE 1-1/4"	01	30.00		1.000	EA		V46-AE-1
1	546523 ELBOW GALV STREET 90°	01	30.00		2.000	EA		1-1/4" 90°
1	549034 VALVE ROTOLOCK HORZ 5/8" FLARE	01	30.00		1.000	EA		27690-P
1	549077 VALVE ROTOLOCK HORZ 1-1/8" IDS	01	30.00		1.000	EA		24216-P
1	553708 INDICATOR LIQUID 5/8"SOL	01	30.00		1.000	EA		SA15S
1	560267 BRACKET TANK	01	30.00		2.000	EA		6B
1	562707 FILTER DRIER 5/8" FLARE	01	30.00		1.000	EA		C415

THERMOTRON INDUSTRIES
PRODUCT STRUCTURE BATCH LISTING
SINGLE EXPLOSION

PARENT	WH	DESCRIPTION	IUM	PS ECN#	QTY
898988	01	OPT HPS-35 WATER COOLED	EA	100	1

LEVEL	COMPONENT	WH	OP#	DESIG	QTY/PER	U/M	DWG	DRAWING #
1	574683 TEE GALV 1-1/4 X 3/8	01	30.00		1.000	EA		
1	578530 NIPPLE GALV	01	30.00		6.000	EA		1-1/4 X CL
1	582015 UNION GALV 1-1/4	01	30.00		4.000	EA		
1	872210 CONDENSER HSE-10 SPECIAL	01	30.00		1.000	EA		R-2523-Z

ERMOTRON INDUSTRIES
PRODUCT RUCTURE BATCH LISTING
SINGLE EXPLOSION

PARENT	WH	DESCRIPTION	IUM	PS ECN#	QTY
915866	01	OPT HPS NO SYSTEM MONITOR	EA	23936 B1	1

LEVEL	COMPONENT	WH	OP#	DESIG	QTY/PER	U/M	DWG	DRAWING #
1	559315 SWITCH PRESSURE HIGH 50#/450#	01	30.00		2.000	EA		P70-DA-1D
1	766275 SWITCH PRESSURE 20"-100PSI W/M	01	30.00		2.000	EA		P70BA-1C
1	565722 SWITCH PUSHBUTTON C-H N.O. MOM	01	40.00		1.000	EA		8411K12 23F439
1	566109 LAMP PILOT INDICATING RED	01	40.00		1.000	EA		1050QA1 125VOLT

MOORE 27

PRG AM MF6002
6/11/93 PAGE 1

THERMOTRON INDUSTRIES

PRODUCT STRUCTURE BATCH LISTING
SINGLE EXPLOSION

PARENT	WH	DESCRIPTION	IUM	PS ECN#	QTY
926426	01	DOOR ASSY STD HPS-35	EA		1

LEVEL	COMPONENT	WH	OP#	DESIG	QTY/PER	U/M	DWG	DRAWING #
1	573385 WINDOW 6 PANE	01			1.000	EA		3406 20X20
1	737208 SHAPES DOOR LINER REINFORCE	01			13.000	FT		SK3589
1	831654 WINDOW FRAME 20X20 PLASTIC,FLA	01			1.000	EA		838X
1	832189 WINDOW WELL 20X20 HPS-16	01			1.000	EA	YES	5351-103 B
1	896780 FRAME DOOR HPS-35	01			1.000	EA	YES	5359-5-1B
1	896799 PANEL DOOR OUTER HPS-35	01			1.000	EA	YES	5359-5-2B
1	896802 LINER DOOR W/20X20WINDOW HPS35	01			1.000	EA	YES	5359-5-3B

THERMOTRON INDUSTRIES

PRODUCT STRUCTURE BATCH LISTING
SINGLE EXPLOSION

PARENT	WH	DESCRIPTION	IUM	PS ECN#	QTY
955264	01	OPT HPS-35 QUIET PACKAGE	EA		1

LEVEL	COMPONENT	WH	OP#	DESIG	QTY/PER	U/M	DWG	DRAWING #
1	526035 GRILL STEEL DOVER WHITE 16X12	01			1.000	EA		650H16X12 12161
1	570998 SOUND DEADENING LEAD SPNG54"W	01			105.000	SF		E-0-10-25
1	946384 BAFFLE AIR REAR PANEL HPS16	01			1.000	EA	YES	5351-123 B
1	946907 PANEL BASE REAR HPS-35 HP80R23	01			1.000	EA	YES	5359-2-188

ERMOTRON INDUSTRIES

PRODUCT STRUCTURE BATCH LISTING
SINGLE EXPLOSION

PARENT	WH	DESCRIPTION	IUM	PS ECN#	QTY
602167	01	PORT OPT 4"X4"	EA	100	1

LEVEL	COMPONENT	WH	OP#	DESIG	QTY/PER	U/M	DWG	DRAWING #
1	547406 PORT FLANGE ONLY 3 7/8"ID DIA	01	20.00		2.000	EA		5246-10-2-
1	547414 PORT SLEEVE ONLY 4"IDX3 3/4"LG	01	20.00		1.000	EA		5246-10-2-
1	554747 PORT PLUG FUSED POLY 7502 MAT	01	45.00		1.000	EA		600 4-1/4" DIA

PROGRAM MFG002
3/08/94 PAGE 1

T E R M O T R O N I N D U S T R I E S

PRODUCT STRUCTURE BATCH LISTING
SINGLE EXPLOSION

PARENT	WH	DESCRIPTION	IUM	PS ECN#	QTY
903922	01	OPT HPS35 SHELF	EA	100	1

LEVEL	COMPONENT	WH	OP#	DESIG	QTY/PER	U/M	DWG	DRAWING #
1	526575 SHELF PILASTER BRACKET CLIPS	01			4.000	EA		67 CLIPS S.S.
1	562022 SHELF PILASTER 13/16 STAINLESS	01			4.000	FT		60-009072 SS
1	897671 SHELF ASSY HPS-35 STD EXPMETAL	01			1.000	EA	YES	626-HPS35B

ENT	WH	DESCRIPTION	DRAWING #	IUM	PS ECN#	QUANTITY
32085	01	LN2 BOOST RETROFIT		EA		0

D#	COMPONENT	DESCRIPTION	DRAWING/VEND. PART#	FIND	QTY/TOTAL	QTY	U/M	SEQ#	M B	PL	WH	NEED DRWG?
	1006538	KIT RETRO LN2 BOOST SPD 35&42	C23757-1B	.00/		1.00	EA	225.00	P		01	
	-1006392	-LN2 RETRO BOX	R-2616-1 B	.00/		1.00	EA	125.00	M	N1	01	YES
	-549220	-VALVE SOLENOID 120/60 NC 06F20	06F2DC2-G944L	.00/		1.00	EA	125.00	B	R1	01	
	-549212	-VALVE SOLENOID 120/60 NC 06F20	06F2DC2414CDEGC05L	.00/		1.00	EA	125.00	B	R1	01	
	-617067	-FITTING BULKHD 1/2FPT X 1/2TUB	8-6GH2BZ-8	.00/		1.00	EA	125.00	B	R1	01	
	-558769	-INSULATION ARMAFLEX SPONGE	36"X 48"X 1/2"	.00/		2.00	SF	125.00	B	C1	01	
	-575841	-NUT FLARE 3/8	NST4-5	.00/		1.00	EA	125.00	B	R1	01	
	-578751	-NIPPLE BRASS 3/8 X CLOSE	112E	.00/		2.00	EA	125.00	B	R1	01	
	-550784	-CONNECTOR BRASS MALE 3/8X3/8	48F-6-6	.00/		1.00	EA	125.00	B	R1	01	
	-581310	-BUSHING BRASS 1/2X3/8	209P-8-6	.00/		1.00	EA	125.00	B	R1	01	
	-575043	-TEE BRASS 1/4"	1203P-4 1/4	.00/		1.00	EA	125.00	B	R1	01	
	-550938	-CONNECTOR BRASS MALE 3/8X1/4	48F-6-4	.00/		1.00	EA	125.00	B	R1	01	
	-578816	-NIPPLE BRASS 1/4 X CLOSE	112C	.00/		2.00	EA	125.00	B	R1	01	
	-958379	-NOZZLE SPRAYING 1/4 FPT BRASS	1/4-G-10W	.00/		2.00	EA	125.00	B	R1	01	
	-577631	-TUBING COPPER REFRIG GRADE 3/8	3/8" OD REFRIG	.00/		12.00	FT	325.00	B	M1	01	
	-547201	-PORT WICK TANK-WINDOW WIPER	5248-11-6Y	.00/		1.00	EA	325.00	M	S1	01	
	-881333	-DUCT EXHAUST FOR GN2,LN2,CO2	5247-11-33	.00/		1.00	EA	325.00	M	S1	01	
	-818909	-WIRE THHN 19 STR 2500' 14GN/YL	#14 GREEN W/YEL	.00/		20.00	FT	325.00	B	L1	01	
	-582392	-STRAP TUBE BRASS 5/8" NOM	A1467	.00/		2.00	EA	325.00	B	R1	01	
	-553546	-COVER BLANK FLAT SQ 4IN APPLET	8465	.00/		1.00	EA	325.00	B	L1	01	
	-562316	-BUSHING SNAP 11/16IDX 1.093 HO	SB87511 2126	.00/		1.00	EA	325.00	B	L1	01	
	-579324	-CONNECTOR FLEXIBLE 3/8" 90*	AC-90 NEER	.00/		2.00	EA	325.00	B	L1	01	

PARENT	WH	DESCRIPTION	DRAWING #	IUM	PS ECN#	QUANTITY
82085	01	LN2 BOOST RETROFIT		EA		0

FIND#	COMPONENT	DESCRIPTION	DRAWING/VEND. PART#	FIND QTY/TOTAL QTY	U/M	SEQ#	M B	PL	WH	NEED DRWG?
	-716693	-RELAY SOLID STATE 3A 3-32L 3A	MP12004 OPTO 22	.00/ 1.00	EA	325.00	B	E1	01	
	-547619	-BRACKET SOLENOID VALVE	1216-1	.00/ 2.00	EA	325.00	B	R1	01	
	-568209	-TERMINAL RING #10 X 10 WIRE	P-10-10RD	.00/ 5.00	EA	325.00	B	L1	01	
	-575213	-WIRE THHN 19 STR UL #14 RED	#14 THHN RED 2500SP	.00/ 20.00	FT	325.00	B	L1	01	
	-529880	-CONDUIT EASY-FLEX 3/8"	3/8"ALUMINUM 250'SP	.00/ 5.00	FT	325.00	B	L1	01	
	-546752	-CONN SEALTITE STR 1/2"STR	ST50 APPLETON	.00/ 2.00	EA	325.00	B	L1	01	
	-556871	-GROMMET RUBBER 1/2"ID 1/16"GRV	2283 3/4"HOLE	.00/ 1.00	EA	325.00	B	R1	01	
	-535750	-ELBOW CU 3/8 90° EL	107C-W2009	.00/ 1.00	EA	325.00	B	R1	01	
	-730831	-THERMOSTAT OE -125+500F	F100-38C AUTO	.00/ 1.00	EA	325.00	B	L1	01	
	-582384	-STRAP TUBE BRASS WS-1100 3/8"	EPC#120 1/2"OD	.00/ 1.00	EA	325.00	B	R1	01	
	-561727	-BOX SQUARE GALV 4X4X 1-1/4	4S-1/2 4X1 1/4	.00/ 1.00	EA	325.00	B	L1	01	
	-562944	-HOLE PLUG 1 1/4" KO SIZE HEYCO	DP1750 2773BLK	.00/ 1.00	EA	325.00	B	L1	01	
	-579383	-CONNECTOR FLEXIBLE 3/8" 45*	7245V 3/8 45DEG	.00/ 1.00	EA	325.00	B	L1	01	
	-720879	-TIMER SSAC OFF DELAY FIXED 60S	TMB4150	.00/ 1.00	EA	325.00	B	L1	01	
	-565579	-TIE WIRE PANDUIT 4"	PLT1M-M	.00/ 10.00	EA	325.00	B	L1	01	
	-625027	-HOLDER CABLE MOUNTING 1 X 2	SMS-A-D15 IVORY	.00/ 5.00	EA	325.00	B	L1	01	
	-575248	-WIRE THHN 19 STR UL #14 WHITE	#14 THHN WHTE 2500	.00/ 20.00	FT	325.00	B	L1	01	
	-715131	-LABEL "WARNING INERT GAS" RED	3-1/2X2-1/4	.00/ 1.00	EA	325.00	B	R1	01	
	-1018276	-PHENOLIC BLOCK LN2	R2616-2 B	.00/ 1.00	EA	125.00	M	N1	01	YES
	-1102813	-ADHESIVE SILASTIC 733 CLEAR	733CL10.10Z	.00/ 1.00	EA	325.00	B	C1	01	
	571455	CAPACITOR PANASONIC	ECQ-E2A474MW	.00/ 1.00	EA	225.00	B	E1	01	
	529742	BRACKET BULB HEAT LIMIT	EL-1407 Z	.00/ 1.00	EA	325.00	M	N8	01	

RENT	WH	DESCRIPTION	DRAWING #	IUM	PS ECN#	QUANTITY
82085	01	LN2 BOOST RETROFIT		EA		0

ND#	COMPONENT	DESCRIPTION	DRAWING/VEND. PART#	FIND QTY/TOTAL QTY	U/M	SEQ#	M B	PL	WH	NEED DRWG?
	532883S	WASHER SPLIT LOCK SS #10	#10 13663	.00/ 2.00	EA	325.00	B	C1	01	
	533022S	NUT HEX STANDARD S.S. 10-32	6895	.00/ 2.00	EA	325.00	B	C1	01	
	539764S	SCREW PAN HD MACHINE SS	29908	.00/ 2.00	EA	325.00	B	C1	01	
	548747	NUT WIRE RED IDEAL	768	.00/ 4.00	EA	325.00	B	L1	01	
	554763S	ADHESIVE SILASTIC DOW CORNING	732CL3 3OZ	.00/ 1.00	EA	325.00	B	C6	01	
	565501	TIE WIRE LOCKING 8"LG 18LB	PLT2M-M PAND	.00/ 1.00	EA	325.00	B	L1	01	
	565617	HOLDER CABLE MOUNTING 1"X1"	ABMSAD PANDUIT	.00/ 1.00	EA	325.00	B	L1	01	
	575388	WIRE THHN 19 STR UL #14 BLACK	#14 BLK THHN 500'SP	.00/ 50.00	FT	325.00	B	L1	01	
	745286	NUT WIRE BLUE IDEAL	30-454	.00/ 4.00	EA	325.00	B	L1	01	
	754161	WIRE THHN 19 STR UL #10 BLK	#10 BLACK 2500 FT.	.00/ 50.00	FT	325.00	B	L1	01	

NOTE: ONE 2.00 DIA ACCESS PORT LOCATED IN CONSOLE GOING THRU R.H. SIDE WALL IS INCLUDED BUT NOT SHOWN

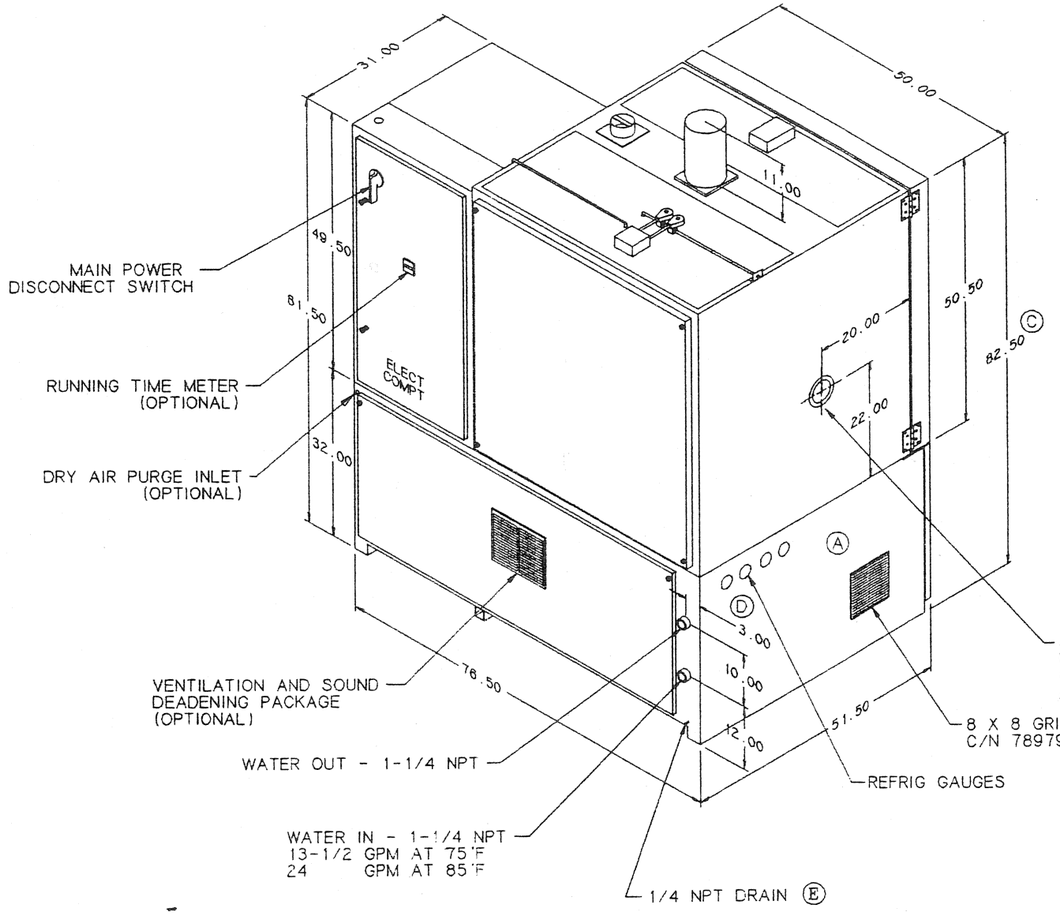

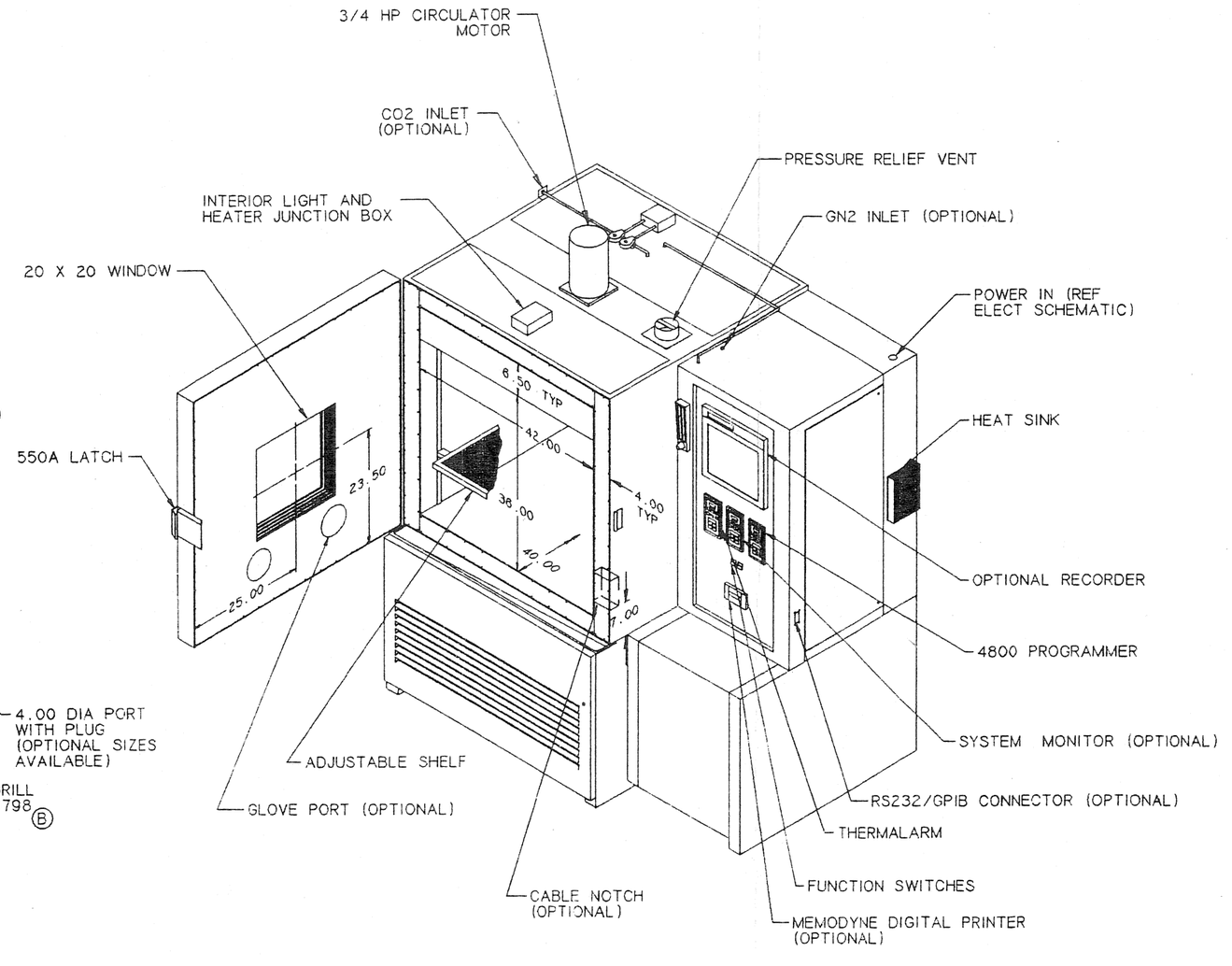

C/N 897485

CAD FILE: ASSEMBLY

SYM	DATE	CHANGE	BY
E	6-28-94	WAS 1/2" NPT	CS

SYM	DATE	CHANGE	BY
A	7/14/92	MOVED VENT 3.5"	RJH
B	1-28-93	ADDED LARGER VENT	RW
C	1-28-93	TALLER BY 1.875	RW
D	11-17-93	3.00 WAS 2.50	RW

THERMOTRON

The system designs on this print incorporate proprietary designs and CONFIDENTIAL TRADE SECRETS OF THERMOTRON INDUSTRIES. Access to this information is RESTRICTED. DO NOT use, disclose, publish or copy this information without express authorization.

Thermotron Industries Inc., Holland, Michigan 49423 USA

DESCRIPTION: HPS-35 ASSEMBLY

MATERIAL: NOTED

FINISH

TOLERANCE: UNLESS .XXX ±.125 NOTED .XX ±.13

DRAWN BY	DATE	SCALE	APPROV
RW	5-17-91	NO	

FOR: HPS-35

DWG NO.: 5359 B

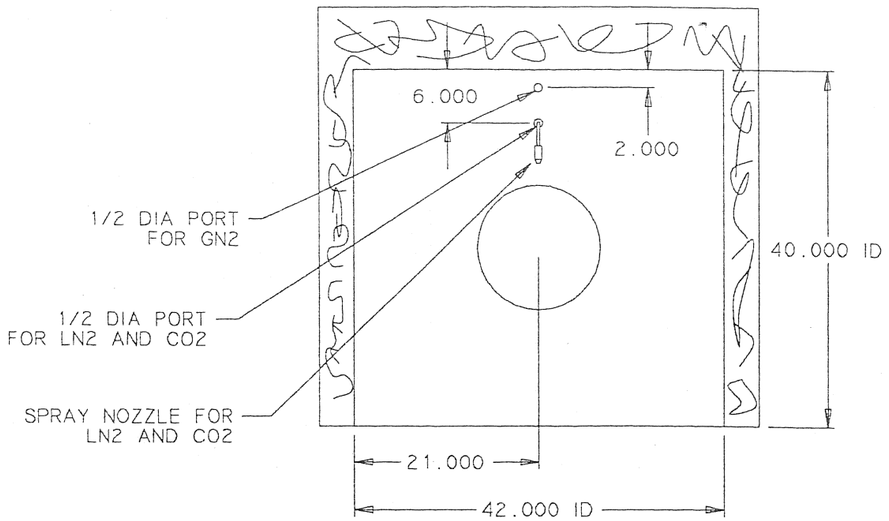

TOP VIEW OF LINER

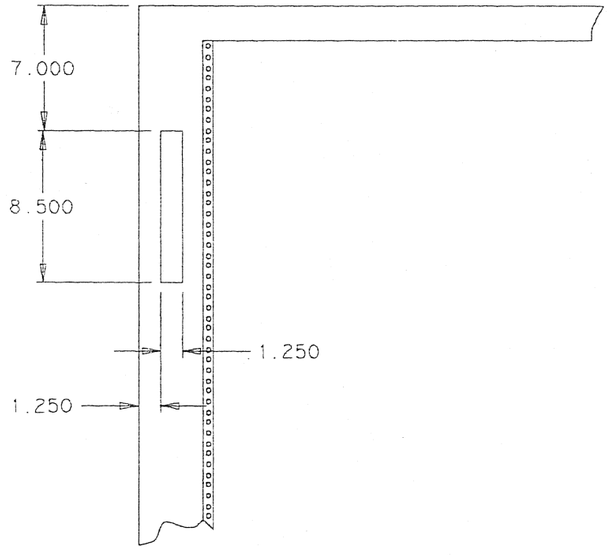

FLOW METER CUTOUT DETAIL
WHEN GN2 IS REQD

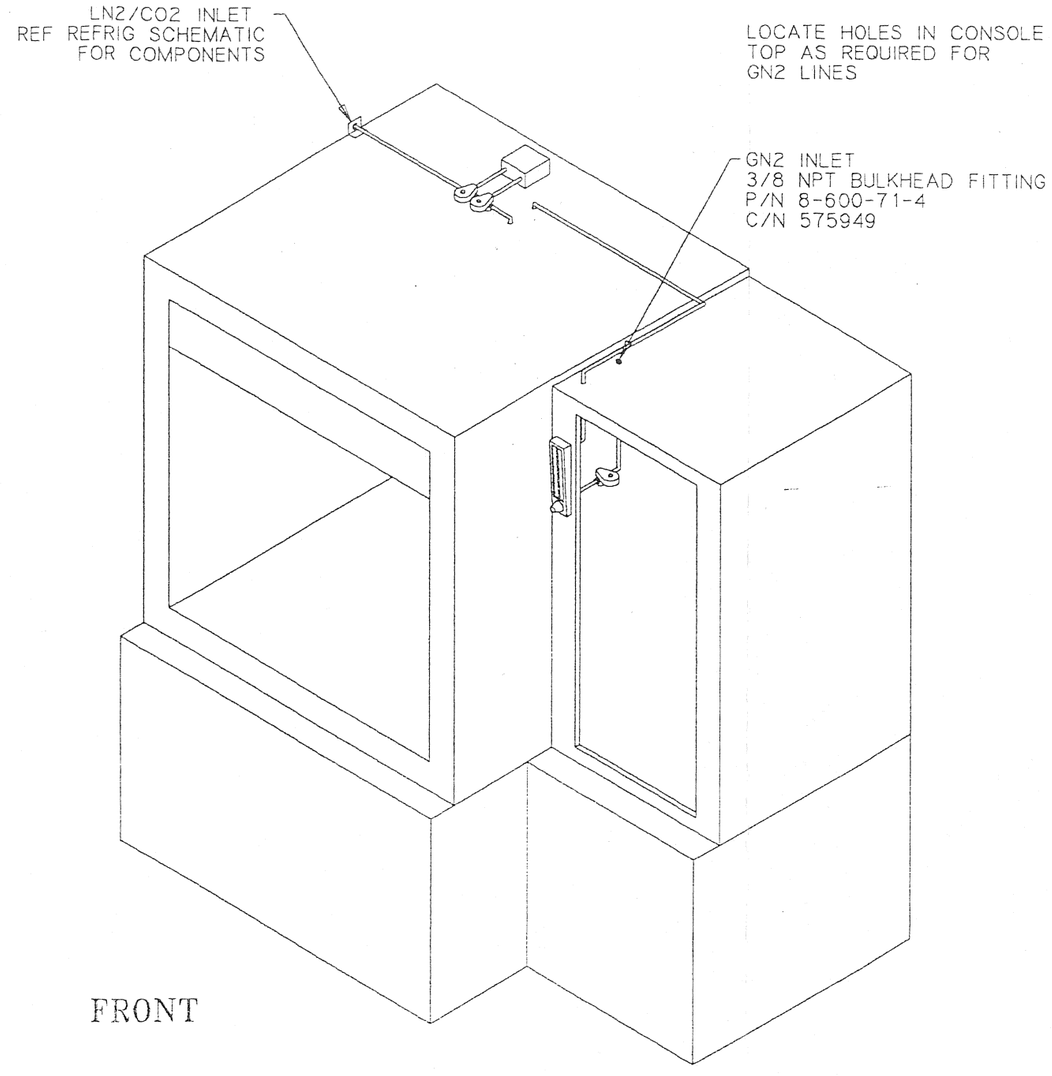

FRONT

CAD FILE: LN2CO2GN2

THERMOTRON

The system designs on this print incorporate proprietary designs and CONFIDENTIAL TRADE SECRETS OF THERMOTRON INDUSTRIES. Access to this information is RESTRICTED. DO NOT use, disclose, publish or copy this information without express authorization.

Thermotron Industries Inc., Holland, Michigan 49423 USA

DESCRIPTION: LN2-CO2-GN2 OPTION LAYOUT

FINISH

TOLERANCE

MATERIAL: NOTED

SYM	DATE	CHANGE	BY	SYM	DATE	CHANGE	BY
A				C			
B				D			

DRAWN BY	DATE	SCALE	APPROV	FOR	DWG NO.	
RW	5-6-92	NO		HPS-35	5359-16-2	B

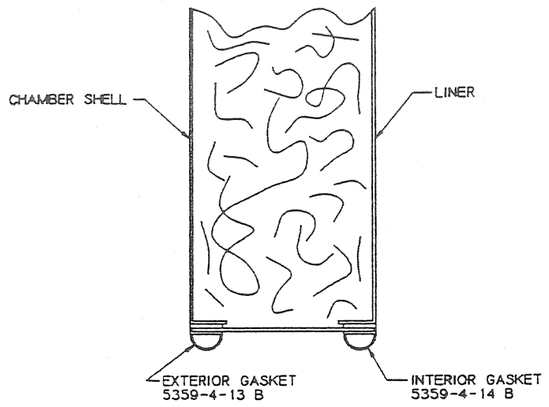

SECTION A-A

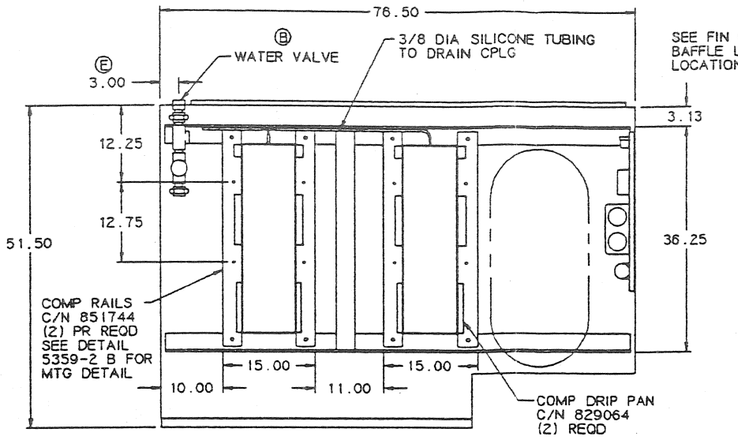

TOP VIEW - MACH AND CONSOLE BASE

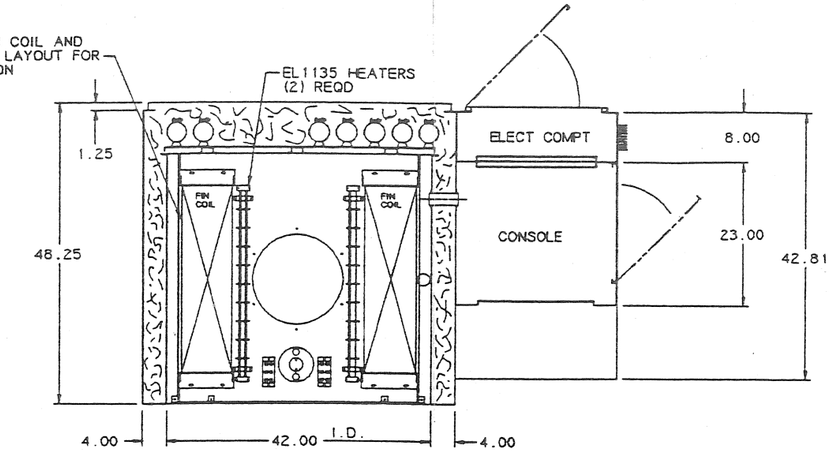

TOP VIEW - CHAMBER AND CONSOLE

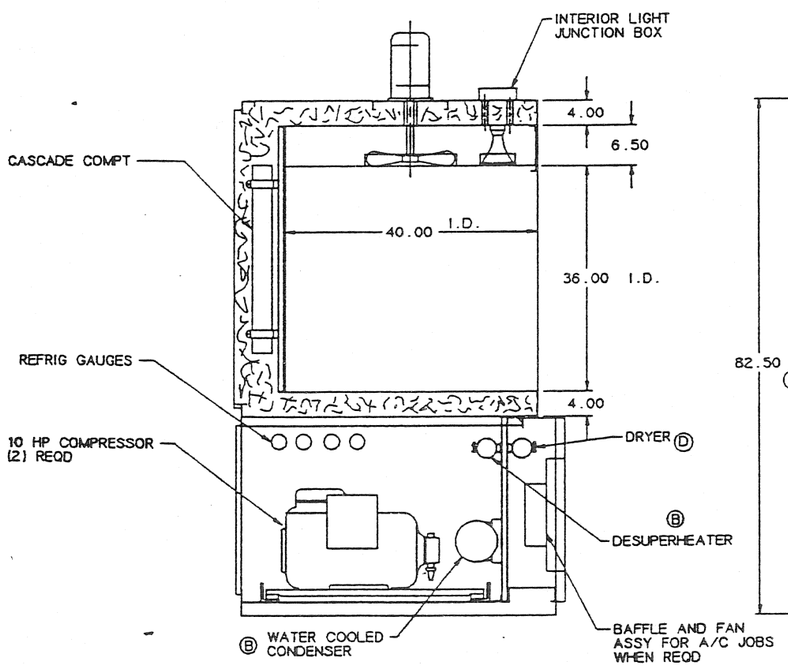

L.H. SIDE VIEW - W/O BASE SIDE PANEL

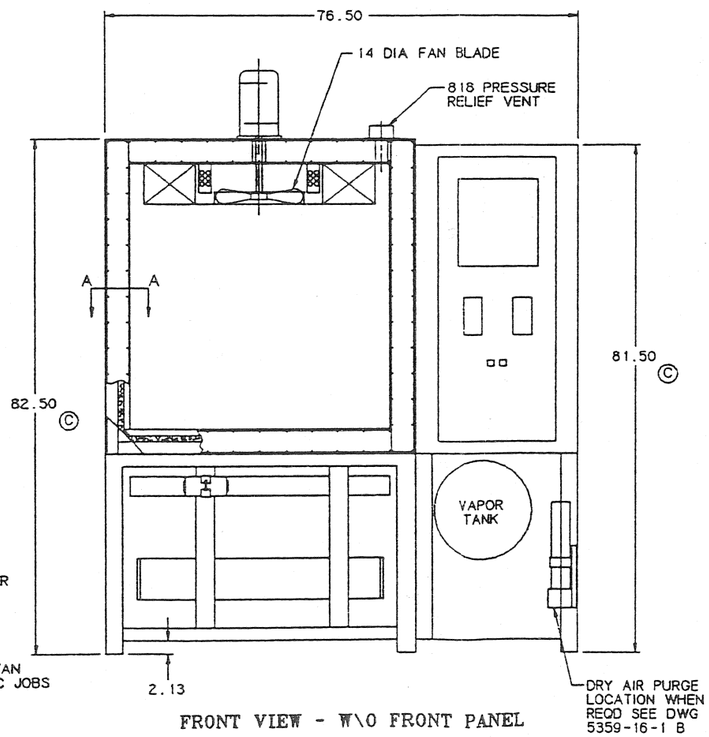

FRONT VIEW - W\O FRONT PANEL

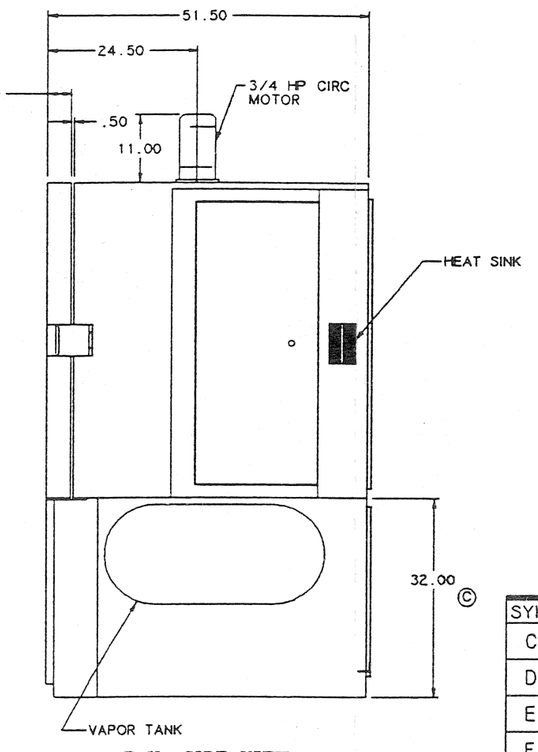

R.H. SIDE VIEW

CAD FILE: INT-LYT

SYM	DATE	CHANGE	BY
C	1-27-93	RAISED BASE 1.875	RW
D	1-27-93	ADDED DRYER	RW
E	11-17-93	3.00 WAS 2.50	RW
F			
G			
H			
J			
K			

THERMOTRON

The system designs on this print incorporate proprietary designs and CONFIDENTIAL TRADE SECRETS OF THERMOTRON INDUSTRIES. Access to this information is RESTRICTED. DO NOT use, disclose, publish or copy this information without express authorization.

Thermotron Industries Inc., Holland, Michigan 49423 USA

DESCRIPTION: INTERIOR LAYOUT

MATERIAL: NOTED

FINISH

TOLERANCE: UNLESS NOTED .XXX ±.060 .XX ±.06

SYM	DATE	CHANGE	BY
A	4-28-92	REDESIGNED BASE	RW
B	7-21-92	UPDATE REFRIG LAYOUT	RJH

DRAWN BY	DATE	SCALE	APPROV	FOR	DWG NO.	
RW	5-8-90	NO		HPS-35	5359-10	B

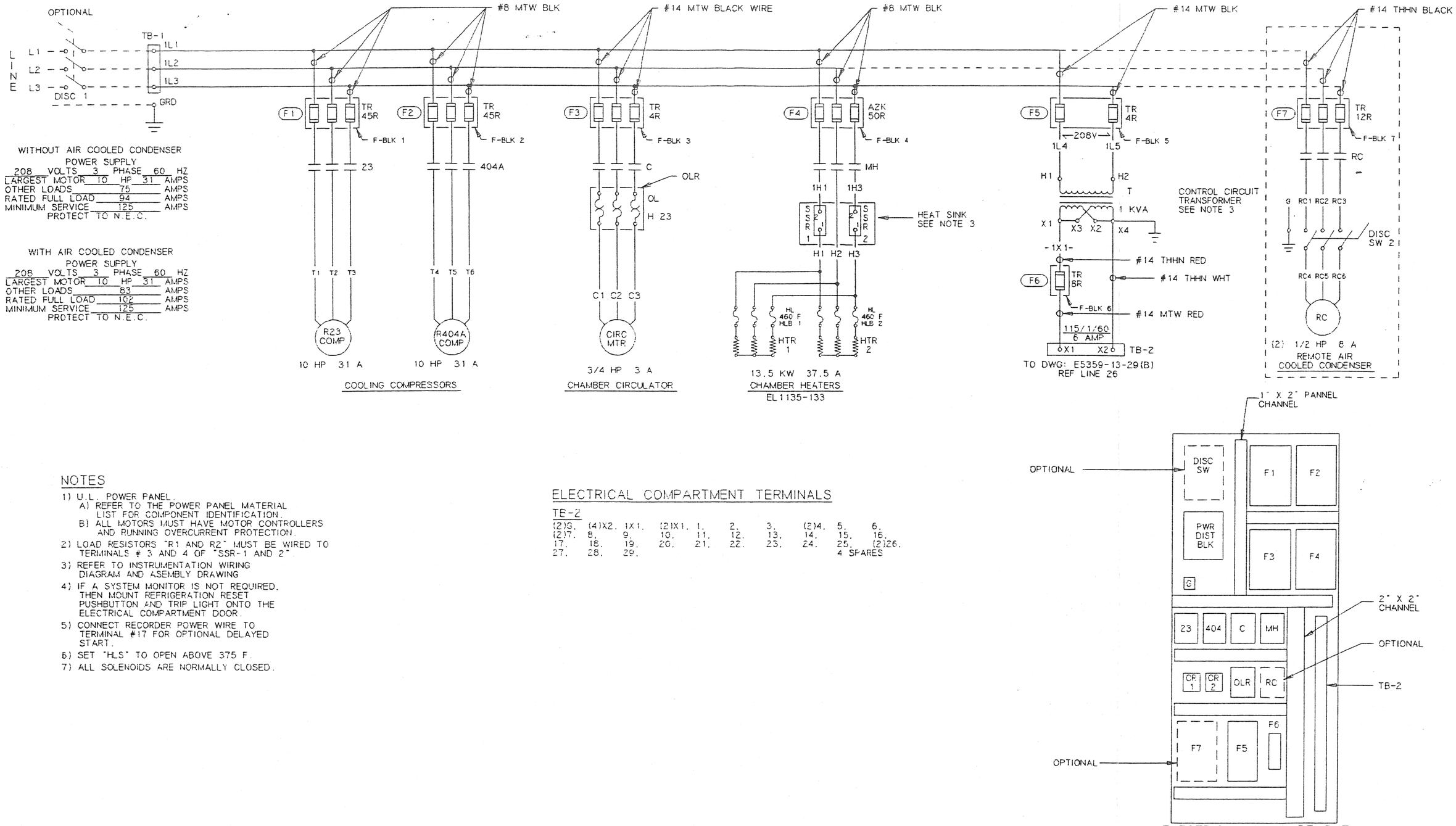

WITHOUT AIR COOLED CONDENSER

POWER SUPPLY

208	VOLTS 3	PHASE 60	HZ	
LARGEST MOTOR	10	HP 31	AMPS	
OTHER LOADS		75	AMPS	
RATED FULL LOAD		94	AMPS	
MINIMUM SERVICE		125	AMPS	

PROTECT TO N.E.C.

WITH AIR COOLED CONDENSER

POWER SUPPLY

208	VOLTS 3	PHASE 60	HZ	
LARGEST MOTOR	10	HP 31	AMPS	
OTHER LOADS		83	AMPS	
RATED FULL LOAD		102	AMPS	
MINIMUM SERVICE		125	AMPS	

PROTECT TO N.E.C.

NOTES

1) U.L. POWER PANEL.
   A) REFER TO THE POWER PANEL MATERIAL LIST FOR COMPONENT IDENTIFICATION.
   B) ALL MOTORS MUST HAVE MOTOR CONTROLLERS AND RUNNING OVERCURRENT PROTECTION.
2) LOAD RESISTORS "R1 AND R2" MUST BE WIRED TO TERMINALS # 3 AND 4 OF "SSR-1 AND 2".
3) REFER TO INSTRUMENTATION WIRING DIAGRAM AND ASEMBLY DRAWING
4) IF A SYSTEM MONITOR IS NOT REQUIRED, THEN MOUNT REFRIGERATION RESET PUSHBUTTON AND TRIP LIGHT ONTO THE ELECTRICAL COMPARTMENT DOOR.
5) CONNECT RECORDER POWER WIRE TO TERMINAL #17 FOR OPTIONAL DELAYED START.
6) SET "HLS" TO OPEN ABOVE 375 F.
7) ALL SOLENOIDS ARE NORMALLY CLOSED.

ELECTRICAL COMPARTMENT TERMINALS

TB-2

(2)G.	(4)X2.	1X1.	(2)X1.	1.	2.	3.	(2)4.	5.	6.
(2)7.	8.	9.	10.	11.	12.	13.	14.	15.	16.
17.	18.	19.	20.	21.	22.	23.	24.	25.	(2)26.
27.	28.	29.						4 SPARES	

ELECTRICAL COMPARTMENT PANEL LAYOUT

THE SYSTEM DESIGNS ON THIS PRINT INCORPORATE PROPRIETARY DESIGNS AND CONFIDENTIAL TRADE SECRETS OF THERMOTRON INDUSTRIES. ACCESS TO THIS INFORMATION IS RESTRICTED. DO NOT USE, DISCLOSE, PUBLISH OR COPY THIS INFORMATION WITHOUT EXPRESS AUTHORIZATION.

THERMOTRON INDUSTRIES, INC. HOLLAND, MI 49423 U.S.A.

NO.	CHANGES	DATE	BY	CHK'D
A	R404A WAS HP80	12/5/94	LH	RVD

NO.	CHANGES	DATE	BY	CHK'D

MODEL	HPS-35
JOB NUMBER	STD DRAWING
DESIGNER	W. LESLIE DATE 2/12/93
DRAWN BY	DR DATE 2/12/93
CHECKED BY	DATE

DESCRIPTION: POWER SCHEMATIC 208/3/60 SUPPLY (R404A & R-23)

DRAWING NO. E5359-13-33 SIZE B

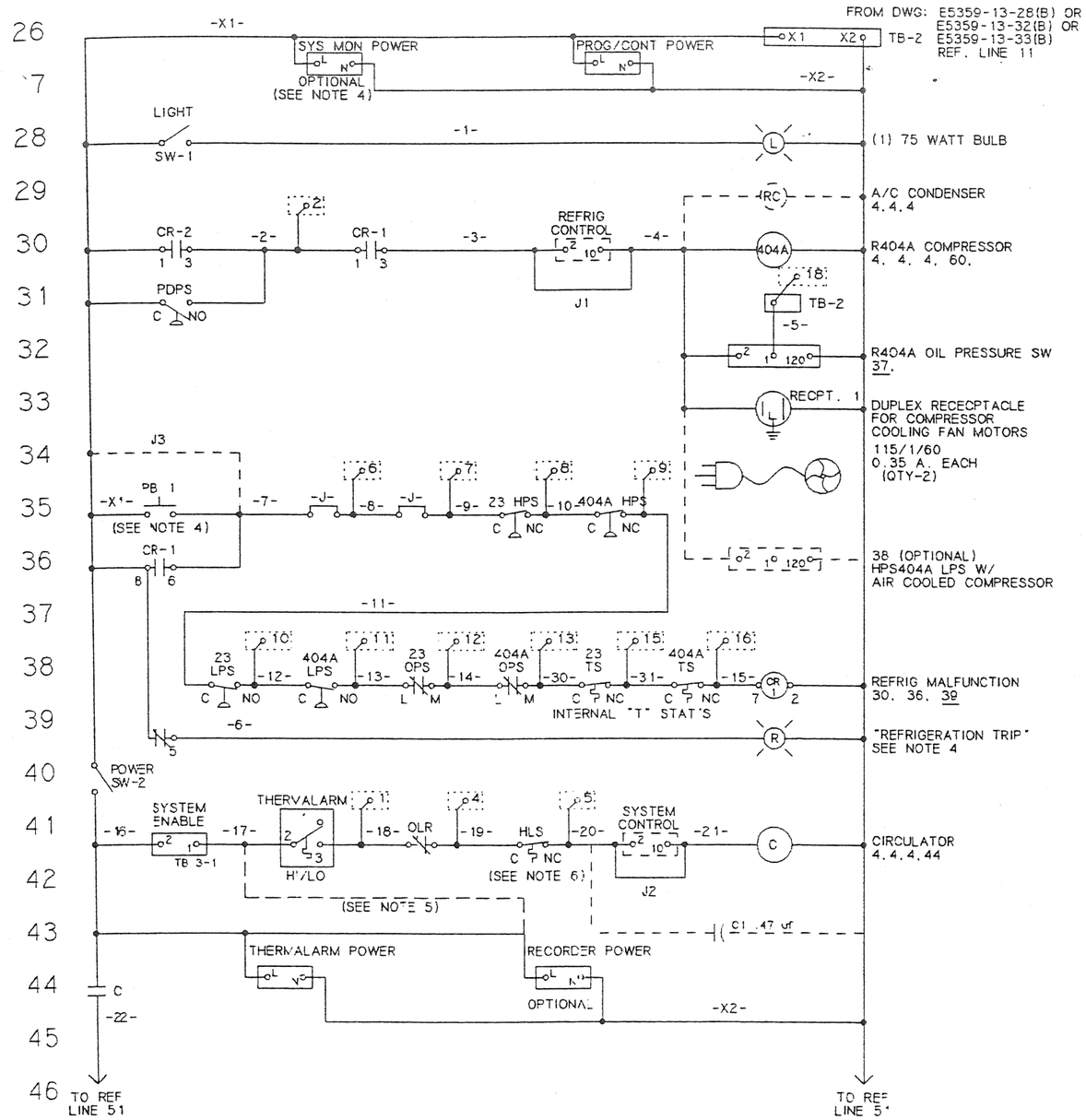

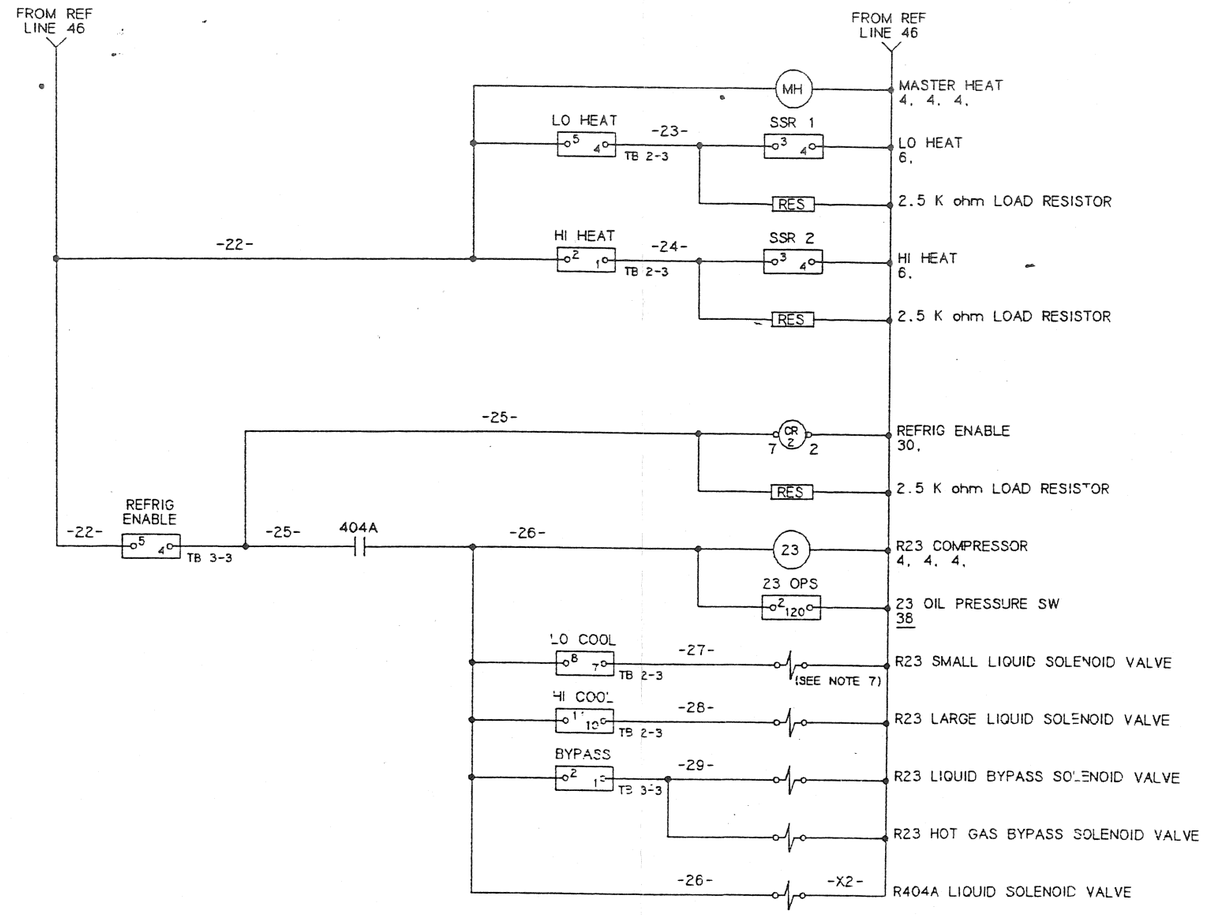

NOTES:

1. SYSTEM MONITOR OPTION
   - A REMOVE PB1 & REFRIG TRIP LIGHT & J1 & J2 JUMPERS
   - B INSTALL J3 JUMPER
2. AIR COOLED OPTION
   - A INSTALL TIME DELAY 404A LPS IN PLACE OF STANDARD 404A LPS
   - B ADD RC CONTACTOR, FUSES, & CONDENSOR AS SHOWN

THERMOTRON

THE SYSTEM DESIGNS ON THIS PRINT INCORPORATE PROPRIETARY DESIGNS AND CONFIDENTIAL TRADE SECRETS OF THERMOTRON INDUSTRIES. ACCESS TO THIS INFORMATION IS RESTRICTED. DO NOT USE, DISCLOSE, PUBLISH OR COPY THIS INFORMATION WITHOUT EXPRESS AUTHORIZATION.

THERMOTRON INDUSTRIES, INC. HOLLAND, MI 49423 U.S.A.

NO.	CHANGES	DATE	BY	CHK'D
A	DEL 23OTS REF LINE 35	2/94	BAC	WW
B	R404A WAS HP80	12/5/94	LH	RVD

NO.	CHANGES	DATE	BY	CHK'D

MODEL	HPS-35
JOB NUMBER	STD DRAWING
DESIGNER	WATSON DATE 2/12/93
DRAWN BY	DX DATE 2/12/93
CHECKED BY	DATE

DESCRIPTION: CONTROL SCHEMATIC (R404A & R-23)

DRAWING NO. E5359-13-29

SIZE B

CABLE LIST

A,B	TYPE "T" T/C EXTENSION WIRE
R	
D	4-CONDUCTOR SHIELDED CABLE
E	DISPLAY/PROG SHIELDED INTERCONNECT CABLE C/N 820148
F,G,H,I.	RELAY BOARD/PROG SHIELDED INTER. CABLE C/N 7495440
J	PCB INTERCONNECT RIBBON-3 C/N 717916 OR PCB INTERCONNECT RIBBON-4 C/N 732419

NOTES

1) REFER TO ELECTRICAL SCHEMATIC
2) ✱ SYMBOL INDICATES A FERRITE BEAD
3) REFER TO BILL OF MATERIAL FOR REQUIRED COMPONENTS

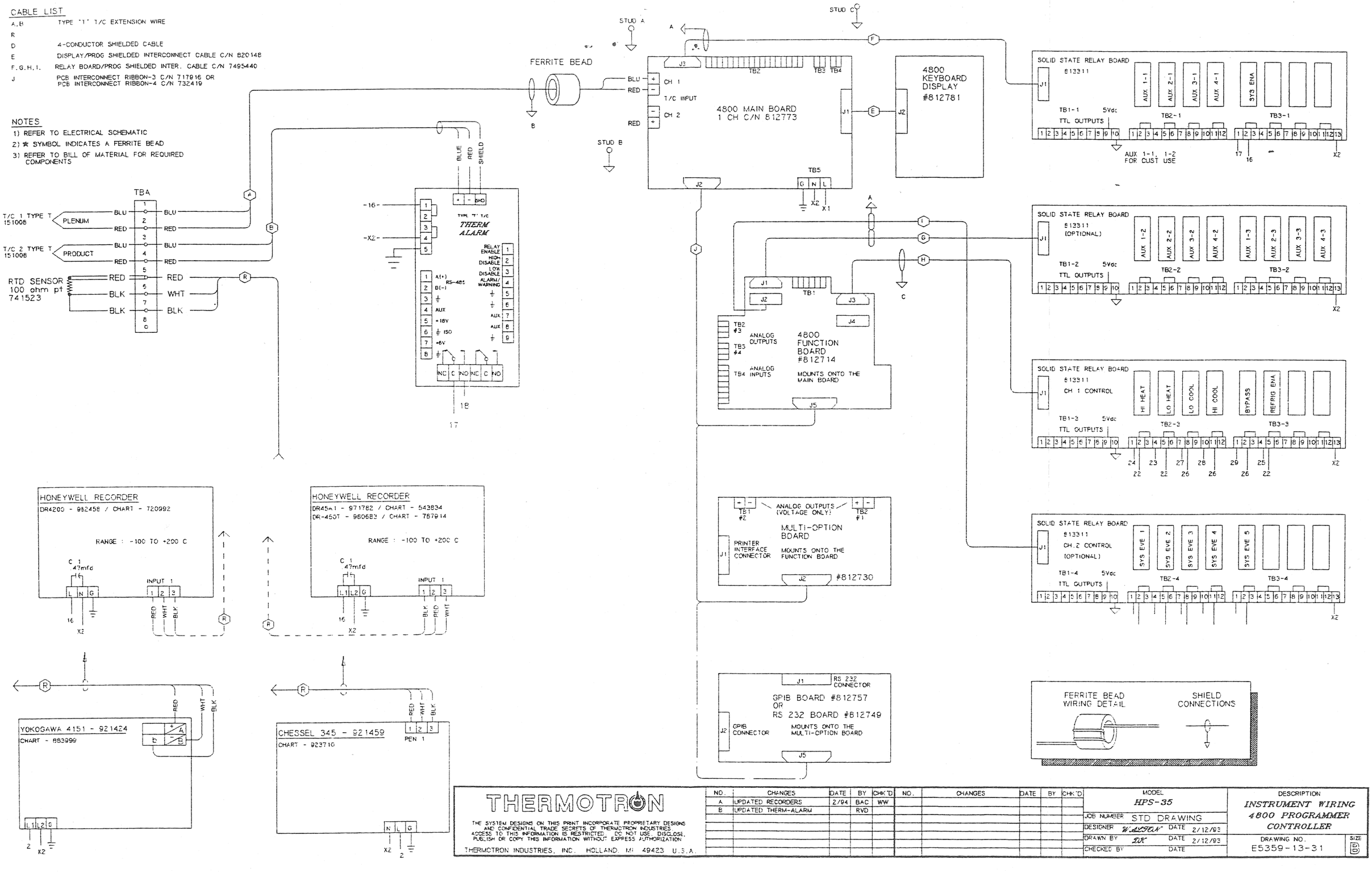

THERMOTRON

THE SYSTEM DESIGNS ON THIS PRINT INCORPORATE PROPRIETARY DESIGNS AND CONFIDENTIAL TRADE SECRETS OF THERMOTRON INDUSTRIES. ACCESS TO THIS INFORMATION IS RESTRICTED. DO NOT USE, DISCLOSE, PUBLISH OR COPY THIS INFORMATION WITHOUT EXPRESS AUTHORIZATION.

THERMOTRON INDUSTRIES, INC. HOLLAND, MI 49423 U.S.A.

NO.	CHANGES	DATE	BY	CHK'D
A	UPDATED RECORDERS	2/94	BAC	WW
B	UPDATED THERM-ALARM		RVD	

NO.	CHANGES	DATE	BY	CHK'D

MODEL	HPS-35
JOB NUMBER	STD DRAWING
DESIGNER	WILSON DATE 2/12/93
DRAWN BY	DR DATE 2/12/93
CHECKED BY	DATE

DESCRIPTION: *INSTRUMENT WIRING 4800 PROGRAMMER CONTROLLER*

DRAWING NO. E5359-13-31 SIZE D

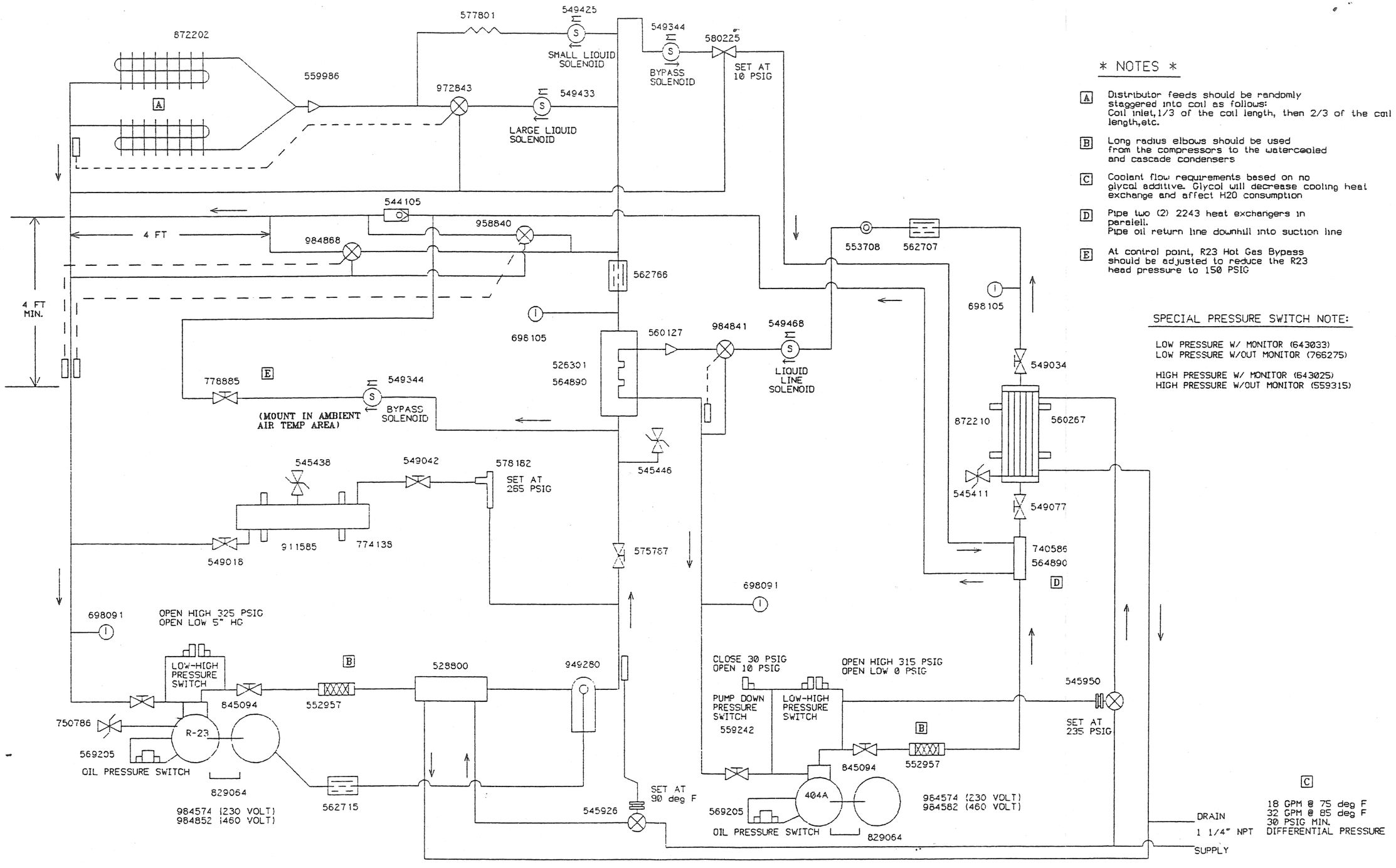

* NOTES *

A Distributor feeds should be randomly staggered into coil as follows: Coil inlet, 1/3 of the coil length, then 2/3 of the coil length, etc.

B Long radius elbows should be used from the compressors to the watercooled and cascade condensers

C Coolant flow requirements based on no glycol additive. Glycol will decrease cooling heat exchange and affect H20 consumption

D Pipe two (2) 2243 heat exchangers in parallel. Pipe oil return line downhill into suction line

E At control point, R23 Hot Gas Bypass should be adjusted to reduce the R23 head pressure to 150 PSIG

SPECIAL PRESSURE SWITCH NOTE:

LOW PRESSURE W/ MONITOR (643033)
LOW PRESSURE W/OUT MONITOR (766275)

HIGH PRESSURE W/ MONITOR (643025)
HIGH PRESSURE W/OUT MONITOR (559315)

THERMOTRON

THE SYSTEM DESIGNS ON THIS PRINT INCORPORATE PROPRIETARY DESIGNS AND CONFIDENTIAL TRADE SECRETS OF THERMOTRON INDUSTRIES. ACCESS TO THIS INFORMATION IS RESTRICTED. DO NOT USE, DISCLOSE, PUBLISH OR COPY THIS INFORMATION WITHOUT EXPRESS AUTHORIZATION.

THERMOTRON INDUSTRIES, INC. HOLLAND, MI 49423 U.S.A.

NO.	CHANGES	DATE	BY
H	Changed labeling from HP62 to 404A	12/28/94	KB

CUSTOMER/VOLTAGE

DESCRIPTION: HPS-35 60hz (WATER COOLED) 404A/R23

DRAWN BY KB DATE 2/26/93

CHECKED BY DATE

DRAWING NO. R5359-12-5

SIZE B

GLOSSARY OF TERMS AND ABBREVIATIONS

ambient: The temperature or other condition of the air surrounding the chamber.

auxiliary relay: A relay that you can program on or off with the programmer/controller.

basket: The product carrier of a thermal shock chamber.

basket transfer piston: A hydraulic piston on thermal shock chambers that moves the basket.

bypass mode: A state in which a refrigeration compressor is running but some or all of the refrigerant does not pass through the cooling coil.

cascade: A combination of two refrigeration systems used to achieve very low temperatures. The evaporator of one system serves as the condenser for the other system.

CO_2: Carbon dioxide.

console: The section of the chamber (often a separate cabinet) that contains the instruments and other controls for the chamber.

dry bulb temperature: The actual test space (chamber) air temperature.

GN_2: Gaseous nitrogen.

gpm: Gallons per minute; a unit of liquid flow rate.

guaranteed soak: A programmed interval guaranteeing the chamber will reach the temperature set point before going on to the next interval.

inches of water: A unit of pressure.

interval: A segment of a program.

kW: Kilowatt; a unit of electrical power.

live load: Heat produced by a product being tested.

LN_2: Liquid nitrogen.

machinery section: The section of the chamber that contains the refrigeration compressor(s) and other machinery.

machinery-section panels: Removable panels that enclose the machinery section.

plenum: Contains the equipment needed to heat, cool, humidify, and dehumidify chambers

port plug: A piece of insulation material that fits into a chamber port.

psig: Pounds per square inch gauge; a unit of pressure.

pull-down: A transition from a higher temperature to a lower temperature.

R-22, R-23, R-134a. R-402A (HP 80), R-404A (HP-62), R-507 (AZ-50), R-508B (SUVA 95): Types of refrigerant.

RH: Relative humidity; a percentage of the maximum amount of moisture the air can hold at a given temperature.

RTD: An electronic temperature sensing device.

scfm: Standard cubic feet per minute; a unit of gaseous flow rate.

serial tag: A label attached to the chamber listing the specifications, serial number, and model number of the chamber.

set point: An assigned value for a test space condition such as temperature or humidity. The initial set point is the value assigned at the beginning of an interval. The final set point is the value the chamber must reach within an interval. Current set points are set by the programmer/controller when going from the initial to the final set point.

single stage: A single-compressor, non-cascade refrigeration system.

test compartment: The section of the chamber enclosing the test space.

test space: The area in the chamber where the product is tested.

thermal shock chamber: A chamber with two or three test compartments. A product carrier moves between the compartments to produce a hot-to-cold shock or a cold-to-hot shock. The compartments can be side-by-side (horizontal) or stacked (vertical).

thermocouple: A temperature sensing device.

torr: A unit of pressure. 760 torr = 1 atmosphere = 0 feet of altitude.

wet bulb temperature: A temperature reading from a thermocouple that is surrounded by a moistened fabric wick. The "wet-bulb depression" (the difference between wet-bulb and dry bulb readings) is used to calculate relative humidity.

4800 CONFIGURATION SHEET

SERIAL NUMBER: 24761

2800/4800 Selection (2800/4800)	[4800]
Ch 2 Option (On/Off)	[off]
2800 WET BLB RH/CMP LIN RH	[n/a]
Deg F Option (On/Off)	[off]
Display Resolution (Tenth/Intgr)	[Intgr]
External Lock (Prg/All)	[Prog]
3-5 CF Option [2800 only] (On/Off)	[n/a]
Heat Only or Cool Control	[n/a]
2800 Cooling (STD Coolng/SL Cooling)	[n/a]
System Monitor (In/Out)	[ ]
Ch 3 Option (On/Off)	[off]
T/C Input Range (STD/EXTD)	[STD]
Ch 2 Type (0-5, 6, 8, 10, 17)	[n/a]
If Type = 2 (Ch 2 is/is not RH)	[n/a]
If Type = 18 (Hundreds/Thousands)	[n/a]
Ch 2 Units (65-90, ACSII)	[n/a]
Ch 3 Type (2-5, 18)	[n/a]
If Type = 18 (Hundreds/Thousands)	[n/a]
Ch 3 Units (65-90, ASCII)	[n/a]
Ch 1 Low Limit	[-87°C]
Ch 1 High Limit	[+191°C]
Ch 2 Low Limit	[n/a]
Ch 2 High Limit	[n/a]
Ch 3 Low Limit	[n/a]
Ch 3 High Limit	[n/a]
Ch 1 Control Mode (0-2)	[0]
Ch 2 Control Mode (0-2)	[n/a]
Ch 3 Control Mode (0-2)	[n/a]
Ch 1 Staging (0-3)	[3]
Ch 2 Staging (0-3)	[n/a]

ANALOG OUTPUT	SELECT	LOW	HIGH
Analog Out #1	[0]	[n/a]	[n/a]
Analog Out #2	[0]	[n/a]	[n/a]
Analog Out #3	[0]	[n/a]	[n/a]
Analog Out #4	[0]	[n/a]	[n/a]

SYSTEM EVENT	SELECT	LOW	HIGH
System Event #1	[0]	[n/a]	[n/a]
System Event #2	[0]	[n/a]	[n/a]
System Event #3	[0]	[n/a]	[n/a]
System Event #4	[0]	[n/a]	[n/a]
System Event #5	[0]	[n/a]	[n/a]

Machinery Time On After Power Failure [120]

(0 to 255 Seconds)

TRULINE RECORDER CONFIGURATION SHEET
1 CHANNEL

GROUP PROMPT	FUNCTION PROMPT	VALUE OR SELECTION
CHART	CHART SPEED	24 Hr.
	HOUR/REV	N/A
	TIME DIV	24
	CONTINUE	YES
	CHART NAME	
	HEADER	YES
	REM SW	NONE
TIME	MINUTES	PRESENT
	HOURS	-
	DAYS	-
	MONTH	-
	YEAR	-
WAKE TIME		0
PEN 1 SETUP	PEN 1	ENABLE
	PEN 1 IN	INPUT 1
	CHART HI	+200.0
	CHART LO	-100.0
	MAJOR DIV	6
	MINOR DIV	10
	RNG1 TAG	TEMP
PEN 2 SETUP	PEN 2	DISABLE
	PEN 2 IN	N/A
	CHART HI	N/A
	CHART LO	N/A
	MAJOR DIV	N/A
	MINOR DIV	N/A
	RNG2 TAG	N/A
PEN 3 SETUP	PEN 3	DISABLE
	PEN 3 IN	N/A
	CHART HI	N/A
	CHART LO	N/A
	MAJOR DIV	N/A
	MINOR DIV	N/A
	RNG3 TAG	N/A

GROUP PROMPT	FUNCTION PROMPT	VALUE OR SELECTION
PEN 4 SETUP	PEN 4	DISABLE
	PEN 4 IN	N/A
	CHART HI	N/A
	CHART LO	N/A
	MAJOR DIV	N/A
	MINOR DIV	N/A
	RNG4 TAG	N/A
INPUT 1	DECIMAL	XXX.1
	UNITS	DEG C
	ENG UNIT	N/A
	IN 1 TYPE	100 OHM PT
	XMITTER	N/A
	IN 1 HI	N/A
	IN 1 LO	N/A
	INPUT COMP.	0
	FILTER 1	2
	BURN OUT	NONE
INPUT 2	DECIMAL	N/A
	UNITS	N/A
	ENG UNIT	N/A
	IN 2 TYPE	N/A
	XMITTER	N/A
	IN 2 HI	N/A
	IN 2 LO	N/A
	INPUT COMP.	N/A
	FILTER 2	N/A
	BURN OUT	N/A

TRULINE RECORDER CONFIGURATION SHEET
1 CHANNEL

GROUP PROMPT	FUNCTION PROMPT	VALUE OR SELECTION
OPTIONS	INPUT 1	ENABLE
	INPUT 2	DISABLE
	INPUT 3	DISABLE
	INPUT 4	DISABLE
	CONTROL 1	DISABLE
	CONTROL 2	DISABLE
	REJ. FREQ.	60 HZ
TIME	REL HUMID.	NO
	ATM PRES	N/A
	DEVIATION	NONE
	ComSTATE	DISABLE
ALARMS	A1S1 TYPE	NONE
	A1S2 TYPE	NONE
	A2S1 TYPE	NONE
	A2S2 TYPE	NONE
ADJUST PRINTING	ALIGNMENT	2 DOT
	TRACE LN	DARK
	DOT LN	MEDIUM
CALIBRATE		N/A
LOCKOUT	PASSWORD	****
	LOCKOUT	NONE
	CHANGE	****

Date: 10/18/93

THERMOTRON

A Venturedyne, Ltd., Company

4800 Programmer/Controller Operator Manual

Operation/Programming/Setup/Calibration

Revised November 11, 1994

For additional manuals, contact Thermotron Industries as follows:

Thermotron Industries
291 Kollen Park Drive
Holland, MI 49423, U.S.A.

Phone: (616) 392-1491 FAX: (616) 393-4549

Printed in U.S.A.

Table of Contents

Title	Page
SAFETY INSTRUCTIONS	iv
SPECIFICATIONS	v
SECTION I GENERAL DESCRIPTION	
SECTION II FUNCTIONAL DESCRIPTION	
4800 PROGRAMMER/CONTROLLER COMPONENTS	2-1
THE KEYBOARD/DISPLAY HEAD FUNCTIONS	2-2
Alpha and Numeric Displays	2-2
Function Keys and LED Lights	2-2
Numeric Keypad	2-2
MAIN BOARD AND FUNCTION BOARD FUNCTIONS	2-7
Analog Input Channels	2-7
Chamber Conditioning System Signals	2-7
Analog Outputs	2-8
System Event Outputs	2-8
Alarm Output Signals	2-8
Auxiliary Outputs	2-8
External Mode and Condition Input Signals	2-9
MULTI-OPTION BOARD FUNCTIONS	2-9
COMPUTER INTERFACE BOARD	2-9
SECTION III THEORY OF OPERATION	
PROGRAMMED TEMPERATURE CYCLING OPERATIONS	3-1
PROGRAMMING THE PARAMETERS	3-3
Air Control Parameters	3-3
Channel 2 Control Parameters (Standard Version)	3-4
Load Control Parameters (PTC Version)	3-5
Refrigeration System Anticipator (RSA) Parameter	3-8

Table of Contents (Continued)

Title	Page
4800 OPERATING MODES	**3-8**
Stop Mode	3-9
Run Mode	3-9
Program Mode	3-10
Hold Mode	3-10
Setup Mode Categories	3-11
Lock Mode	3-12

SECTION IV
HOW TO PROGRAM AND OPERATE THE 4800

HOW TO OPERATE THE 4800 IN THE MANUAL MODE	**4-1**
HOW TO PROGRAM THE TEMPERATURE PROFILES	**4-3**
How to Enter a New Program	4-3
How to Review or Edit a Program	4-6
How to Delete One Program	4-7
How to Delete All Programs	4-7
HOW TO RUN A PROGRAM	**4-8**
HOW TO HOLD OR SUSPEND A PROGRAM	**4-9**
How to Operate in the Hold Mode	4-9
How to Operate in the Suspended Mode	4-10
WHAT DATA VALUES CAN BE EDITED IN THE STOP, MANUAL, HOLD AND SUSPENDED MODES	**4-11**

SECTION V
HOW TO TUNE UP THE CONTROL PARAMETERS

HOW TO TUNE UP THE STANDARD VERSION AND PTC AIR CHANNEL PARAMETERS	**5-1**
Special Calculations for the PTC Version	5-2
How to Tune Up the Proportion Bands	5-2
How to Tune the Integral Time Parameters	5-6
HOW TO TUNE UP THE PTC LOAD PARAMETERS	**5-9**
How to Tune the Gain Parameters for the PTC Load Channel	5-9
How to Tune the Integral Time Parameters for the PTC Load Channel	5-14

Table of Contents (Continued)

Title Page

SECTION VI
HOW TO ENTER OR VIEW THE SETUP MODE PARAMETERS

HOW TO TURN PTC ON AND OFF 6-1

HOW TO SET UP THE REFRIGERATION SYSTEM ANTICIPATOR (RSA) PARAMETER 6-2

HOW TO SET UP CHANNEL 3 AND THE AUXILIARY GROUPS 6-3

HOW TO SET UP THE ALARMS 6-4

HOW TO VIEW THE RUNNING TIME METERS 6-6

HOW TO ENTER THE TIME AND DATE 6-7

HOW TO SET THE AUXILIARY COOLING PARAMETER 6-7

HOW TO CALIBRATE THE ANALOG INPUT AND OUTPUT CHANNELS 6-8

APPENDIX A
STOP CODE LISTING

APPENDIX B
HOW TO SET UP THE PRINTER INTERFACE ON THE MULTIOPTION BOARD

APPENDIX C
HOW TO USE AN EXTERNAL EEPROM FOR PROGRAM STORAGE.

HOW TO STORE A PROGRAM ON AN EEPROM C-1

HOW TO LOAD A PROGRAM FROM AN EEPROM INTO THE 4800 ..... C-3

APPENDIX D
PREPROGRAMMED IEC AND MIL STD TEST PROFILES

HOW TO USE THE ROM TEST PROFILES D-1

ROM TEST PROFILE LISTING D-3

APPENDIX E
LOCKING THE KEYBOARD

GLOSSARY OF TERMS

SAFETY INSTRUCTIONS

For the safe operation of this instrument, read and follow all warnings and cautions.

WARNING: If you do not follow the instructions in a **WARNING**, injury can occur to you or to other personnel.

CAUTION: If you do not follow the instructions in a CAUTION, damage can occur to the equipment.

1. You must have training in the operation of this instrument before using it. Read the instruction manual.
2. Do not operate this instrument unless it is completely assembled.
3. Maintenance and repairs must be done by authorized personnel only. Make calibrations according to the specifications given in this manual.
4. Use a mild soap and water solution to clean the control panel of the instrument.
5. To prevent electrical shock, do not touch the transformer and terminal block TB5 on the Main Board.
6. To prevent damage to the instrument, do not connect AC power to the terminal blocks on the Main Board and the Multi-Option Board.
7. Always use an electrical supply system with a separate electrical ground conductor. For maximum protection against electrical shock, use a circuit that is protected by a ground fault circuit interrupter.
8. This instrument is designed to use specific voltage, amperage and phasing. Under or over powering the instrument will cause premature failures and will void certain aspects of the warranty.

SPECIFICATIONS

OPERATING TEMPERATURE:	0°C to 50°C (32°F to 122°F)
POWER REQUIREMENTS:	117 volts AC ±10%, 50/60 Hertz, 23.3 volt amperes.
CHANNELS:	One, two, or three independently programmable channels.
TEMPERATURE RANGE:	-87°C to + 190.6°C (-125°F to 375°F).
HUMIDITY RANGE:	20% to 100% relative humidity. (Using wet bulb/dry bulb.)
INPUT:	Type "T" thermocouple (copper/constantan) on channel 1 and available on channel 2. 0-5 volt or 0-20 milliamperes analog inputs available on channels 2 and 3.
SAMPLING RATE:	Process sampled every 0.1 sec. Control outputs updated every 1 second.
MEASURING ACCURACY:	±.25% of span typical.
TEMPERATURE SCALE:	Celsius or Fahrenheit.
DISPLAY RESOLUTION:	Selectable tenths or integer - 0.1° or 1° Celsius or Fahrenheit, 1% relative humidity.
CONTROL METHOD:	Direct digital control, heat only, cool only or heat/cool as required by chamber design.
PROPORTIONAL BAND:	Programmable 1 to 1000 units.
INTEGRAL TIME (Automatic Reset):	Programmable 1 to 1000 seconds or off (0).
OUTPUTS:	Time proportioning, self-adjusting, analog 0-5 volts, 4 - 20 mA.
MACHINERY CYCLE TIME:	Software controlled.
AUXILIARY COOLING OUTPUT:	Programmable, 0 to 100% of 5 second time frame (channel 1 only).
ALARM OUTPUTS:	Programmable, one process and one deviation for each channel, ON/OFF TTL compatible. The alpha display flashes.

AUXILIARY EVENT OUTPUTS:	12 programmable ON/OFF.
SYSTEM EVENT OUTPUTS:	12 ON/OFF TTL compatible. Five possible outputs that are deep configured at the factory.
INTERVALS:	Up to 256 intervals may be stored in memory, but no one program can exceed 127 intervals.
INTERVAL LENGTH:	1 minute to 24 hours. 1 minute resolution.
PROGRAMS:	Up to 10.
LOOPS:	Up to 16 loops per program. Each loop may be repeated 255 times, nesting allowed.
PROGRAM MEMORY:	RAM. Dynamically allocated by program number up to maximum number of intervals. Lithium battery back-up to 7 years without power. Battery shelf life 10 years.
COLD JUNCTION COMPENSATION:	Temperature stability ±0.025°C/°C ambient change.
OPEN THERMOCOUPLE PROTECTION:	Deactivates all outputs. The alpha display shows "OPEN T/C".
OPTIONAL ACCESSORIES:	**Multi-Option Board** -Real-time clock -Analog process variable retransmit -Printer output: RS-232 "talk only" port **Computer Interface Board** -RS-232, RS-485, or GPIB (IEEE-488, 1978 standard) **Solid State Relay Board**

SECTION I
GENERAL DESCRIPTION

This section provides a basic overview of the 4800 Programmer/Controller. For a detailed description of the 4800, refer to Section II for the hardware description, and Section III for the Theory of Operation. Refer to the **2800/4800 Programmer/Controller Troubleshooting Guide** for a technical description and interface listings.

The 4800 is a microprocessor based programmer and controller. The programmer function allows the user to program temperature profile tests, and store them in program memory. These programs then operate the controller functions of the 4800.

The controller function operates the chamber and its attached equipment. Analog and Transistor-Transistor Logic (TTL) level signals are input and output to control and monitor the system. The chamber's conditioning systems, printers, chart recorders, and solid state relay devices are all operated from the controller signals. Other analog devices are monitored and operated as well.

The 4800 can be programmed and operated locally or from a Host Computer. The 4800 is manually programmed and operated using the front panel. The 4800 can also be programmed using the optional RS-232, RS-485 and GPIB computer interfaces. In systems with an optional I/O interface, refer to the **4800 Programmer/Contoller Computer Interface Manual.**

The 4800 can provide up to three channel programmable control of the chamber functions. Each channel can provide individual control to separate systems, or they can work together. There are two versions of the 4800 available:

- 4800 Standard (with channel 3 option)
- 4800 Product Temperature Control (with channel 3 option)

The *4800 Standard version* operates channel 1 and channel 2 separately or as a Temperature/Humidity system. Channel 1 is dedicated as chamber air temperature using a type T thermocouple. Channel 1 operates the chamber's heating and cooling systems. Channel 2 can be another temperature channel, humidity channel or linear input channel. If channel 2 is not humidity, it controls its system independently of channel 1. If channel 2 is humidity, channel 1 and 2 work together to provide the proper temperature and humidity set points.

The *4800 Product Temperature Control (PTC) version* is designed to offset product temperature lag behind air temperature. When PTC is enabled Channel 2 senses the temperature at the product (Load) and causes channel 1 (Air) to operate the heating and cooling system at a faster throttle and higher set point to make up for the temperature lag. When PTC is disabled, channel 1 controls and operates the chamber's heating and cooling systems. See Section III for a detailed description of the PTC function parameters.

Channel 3 can be added to both versions. Channel 3 provides an additional linear input channel.

Before operating the 4800, several set up procedures must be accomplished. Most of the set up procedures are performed at Thermotron. However, these procedures may need to be performed when the requirements change. Refer to Sections VI and VII to set up the 4800 software. Refer also to Section II and the Appendices to set up the hardware.

SECTION II
FUNCTIONAL DESCRIPTION

This section provides a basic overview of the 4800 hardware components and their functions. Refer to the 2800/4800 Troubleshooting Guide for a more detailed technical description and interface listings.

The 4800 programmer and controller functions are accessed and interfaced using the keyboard/display head and circuit boards The 4800 can be operated locally using the keyboard/display head or remotely using the optional Computer Interface. In addition, the 4800 can be interfaced with an external printer.

4800 PROGRAMMER/CONTROLLER COMPONENTS

The 4800 P/C consists of three major components (see Figure 2-1):

- The Keyboard/Display head, which mounts the keypads, displays, and status LED's on a remote front panel.
- The Main board provides main power distribution, the microprocessor circuits, and various inputs and outputs.
- The Function board provides additional analog inputs and outputs as well as system control inputs.

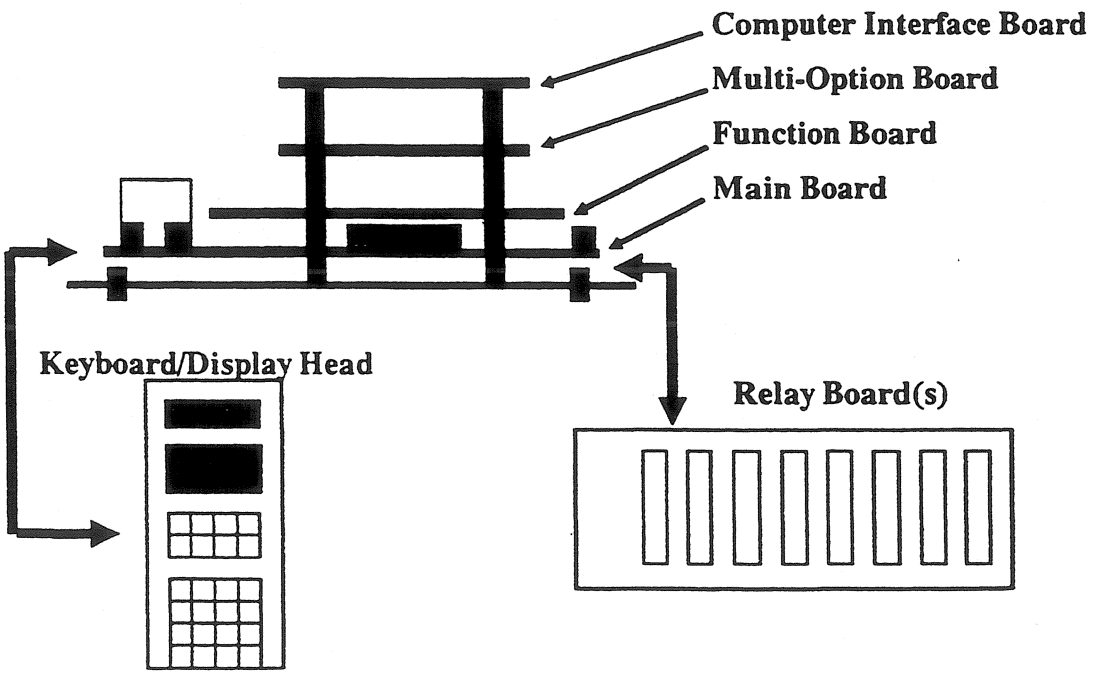

Figure 2-1. 4800 Programmer/Controller Layout.

Additional boards can be added to the 4800:

- The Multi-Option board provides a real-time clock, printer output, and analog voltage outputs.
- The Computer Interface board provides either IEEE-488 (GPIB) or RS-232/RS-485 interface capabilities. See the **4800 Programmer/Controller Computer Interface Instruction Manual.**
- The Solid State Relay boards provide a switching interface between the 4800 TTL outputs and the chamber's system. Each relay provides switching on the 115 VDC chamber control circuit to operate the system. Extra relays are often provided for customer use.

The circuit boards are normally piggy-backed somewhere inside the chamber's instrument console. The Keyboard/Display Head is normally mounted on the console front panel. The Keyboard/Display head connects to the Main Board thru an interface cable. Each component and its functions are described in the rest of this section.

THE KEYBOARD/DISPLAY HEAD FUNCTIONS

The control panel provides the means to locally enter, change or delete test profiles and other data. Refer to Figure 2-2. Each control panel consists of an alpha display, numeric display, 10 function keys, two hidden keys and a numeric keypad. The keypads and displays provide operator interface capabilities that allows test profiles, Setup functions, calibrations, and other functions to be programmed into the 4800.

ALPHA AND NUMERIC DISPLAYS

The alpha and numeric displays provide the interactive messages between the 4800 and the user.

- The alpha display provides the programming prompts. Ten characters are displayed on one line.
- The numerical display shows the temperature settings, time, date, and interval numbers. The numeric display also shows the data as it is entered on the keypad.

FUNCTION KEYS AND LED LIGHTS

The 10 function keys and LED's are located directly below the numeric display. The function keys select the 4800 operating modes. The LED's indicate the 4800's current operating mode. Refer to Table 2-1 for a description of the function keys.

NUMERIC KEYPAD

The numeric keypad is located at the bottom of the control pad. This keypad consists of 14 data keys. Each key has assigned functions which allow the operator to enter program data or select additional functions. Table 2-2 provides descriptions of each key and its function.

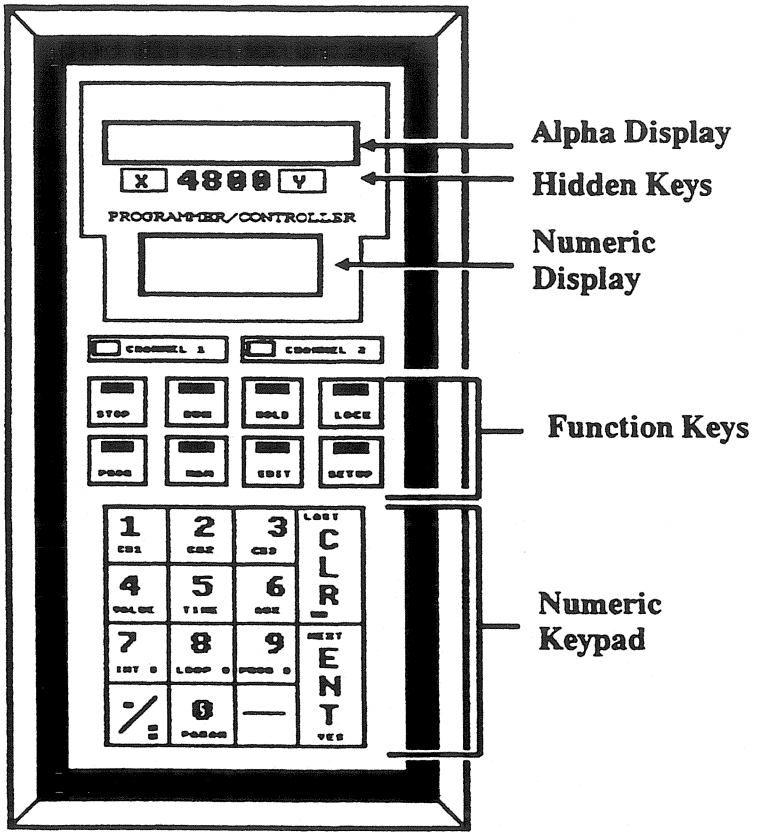

Figure 2-2. Keyboard/Display Head.

Table 2-1. Function Key and LED Descriptions.

Key/LED	Description
CHANNEL 1	Lights when channel 1 is operating the chamber's heating and cooling system.
CHANNEL 2	Lights when channel 2 is operating its assigned chamber system (i.e., humidity, altitude, etc.).
STOP	Places the 4800 in the Stop mode. This stops a running program, a Manual mode operation, or various setup routines. the LED lights when the 4800 is in the Stop mode.
RUN	Places the 4800 in the Run mode. The Run mode allows you select the Run Program mode to run a program, or to select the Run Manual mode for manual operations. The LED lights when the 4800 is in the Run mode.
HOLD	Places a running program in the Hold mode. The Hold mode allows you to edit the current interval. When used with the MAN key (i.e., press HOLD/MAN in sequence), it places the program in the Suspended mode. The suspended mode allows you to run the 4800 in the Manual mode while the program is on Hold. The LED lights when the 4800 is in either type of Hold mode.
LOCK	Provides the means to lock or unlock the keyboard. The LED lights when in the LOCK mode.
PROG	Used to enter, edit, and run programs. The LED lights when in the PROG mode.
MAN	Used to operate the 4800 in the Manual mode. The LED lights when in the MAN mode.
EDIT	Used to edit existing profiles or change certain parameters of the current interval. The LED lights when in the EDIT mode.
SETUP	Initiates some setup action such as setting alarms, calibration, or program options. The LED lights when in the SETUP mode.

Table 2-2. Numeric Key Pad Descriptions.

Page 1 of 2

Key	Description
1 (CH1)	Enters the numeric value of 1. Displays the channel 1 values for the **VALUE** or **PARAM** display group.
2 (CH2)	Enters the numeric value of 2. Displays the channel 2 values for the **VALUE** or **PARAM** display group.
3 (CH3)	Enters the numeric value of 3. Displays channel 3 values for the **VALUE** or **PARAM** display group.
4 (VALUE)	Enters the numeric value of 4. Scrolls thru the following displays: Selected channel's current process variable. Selected channel's current set point. Actual deviation of the channel's process variable from set point. Initial value of the channel's set point for the current interval. Final value of the channel's set point for the current interval.
5 (TIME)	Enters the numeric value of 5. Scrolls thru the following displays: Time left for the current interval. Programmed interval time. Current time setting. (Available only when equipped with a Multi-Option board.) Current date setting. (Available only when equipped with a Multi-Option board.) Print interval time. (Available only when equipped with a Multi- Option board.)
6 (AUX)	Enters the numeric value of 6. Scrolls thru the Auxiliary Group outputs for the current interval.
7 (INT #)	Enters the numeric value of 7 Provides these functions Displays the current interval number. Displays the next interval in the program. Provides positive coarse tuning in the Analog Output Calibration mode.
8 (LOOPS)	Enters the numeric value of 8 Scrolls thru these displays: Number of loops left in a program. Total number of programmed loops.

Table 2-2. Numeric Key Pad Descriptions.

Page 2 of 2

Key	Description
9 (PROG #)	Enters the numeric value of 9. Provides these functions: Displays the number of the program running. Provides negative coarse tuning in the Analog Output Calibration mode.
0 (PARAM)	Enters the numeric value of 0 Scrolls thru these displays: Channel's output throttle as a percentage Channel's proportional band setting in degrees Fahrenheit, Celsius or percent relative humidity for the selected channel. Channel's integral time parameter in seconds for the selected channel. Auxiliary cooling duty cycle as a percentage
Y (HIDDEN KEY)	Used to enter the Alarm Setup data.
X (HIDDEN KEY)	Used to access the following functions: RAM test Deep Configuration Calibration.
CLR (NO) (LAST)	Performs these functions: Cancels a numeric data entry Answers NO to yes/no questions Scrolls backwards through the display.
ENT (YES) (NEXT)	Performs these functions: Completes a numeric data entry Answers YES to yes/no questions Scrolls forward through the display
./:	Performs these functions: Enters a decimal point Selects hours and minutes when entering the time Selects month and day when entering the date. Provides positive fine tuning in the Analog Output Calibration mode. Used to perform a Display Test. (Refer to the Troubleshooting Guide for more information.)
-	Performs these functions: Enters a negative value. Provides negative fine tuning in the Analog Output Calibration mode. Used to perform a Key Test. (Refer to the Troubleshooting Guide for more information.)

MAIN BOARD AND FUNCTION BOARD FUNCTIONS

The Main Board and Function Board are the standard circuit boards of the 4800. These boards carry out all of the standard functions of the 4800. The Main Board contains the power supply, microcomputer, firmware and program storage. both the Main Board and Function Board contain the logic and electronic circuits needed to control and operate a chamber, and to input from a chamber. The following paragraphs describe the input and output functions of the Main Board and the Function Board.

ANALOG INPUT CHANNELS

The Analog Input Channels sense the inputs of thermocouples, transducers, and other analog sensing devices.

- Channel 1 is dedicated to the type T thermocouple sensor mounted in the chamber to sense the air temperature (AIR). The sensor inputs thru the thermocouple input on the Main Board.
- Channel 2 can sense temperature, humidity and other linear inputs for control purposes. Channel 2 can also be configured for Product Temperature Control (PTC). Channel 2 can sense its inputs using the Main Board's type T thermocouple input or the Function Board's analog input.
- Channel 3 can sense linear inputs thru the Function Board's analog input connector.

The 4800 uses the channel inputs to sense the conditions of the chamber's process variables. [A process variable is the actual sensed condition (i.e., temperature, humidity, etc.) inside the chamber's test space.] The 4800 adjusts its outputs according to each channel's process variable inputs.

CHAMBER CONDITIONING SYSTEM SIGNALS

The chamber conditioning signals are used by the controller to operate the chamber heating and cooling systems. These signals are dedicated to the system, and are internally programmed.

- The System, Compressor, and Humidity Enable outputs allow their respective systems to turn on.
- The Refrigeration On output is the same as the Compressor Enable for channel 1.
- The High/Low Heat/Cool outputs control their systems. For example, channel 1 High and Low Cool outputs normally operate the Large Liquid and Small Liquid solenoids that regulate the flow of refrigerant in to the chamber's evaporator coil.
- The Bypass outputs operate the bypass solenoids in their respective circuits.
- Aux Cool operates the Auxiliary Cooling system (i.e., LN2, CO2, etc.).

ANALOG OUTPUTS

The Analog Outputs are used by Thermotron to re-transmit analog inputs or control variables to analog sensing devices. One common example is a temperature chart recorder. The 4800 sends thermocouple inputs from analog input channels 3 and 4 to the chart recorder to be drawn on the chart. Variables, such as deviation from set point, can also be sent. Note that Analog Output Channels are available on the Multi-Option Board.

SYSTEM EVENT OUTPUTS

The system events are TTL outputs used by Thermotron to program special events in the chamber's system. For example, a Thermotrimmer is programmed to come on only above 50°C. When used, the system event outputs are hooked up to solid state relays on relay boards similar to the auxiliary output relays. Unlike the auxiliary outputs, the system events are activated when the chamber operates within pre-programmed ranges and do not rely on a time base.

ALARM OUTPUT SIGNALS

The alarm output TTL signals indicate when the process variable exceeds the programmed limits. There are two types of alarms for all three channels.

- **Deviation Alarms** - active when the chamber air temperature is outside the channel deviation alarm band. A deviation alarm band programs how far the process variable can be from set point. For example, a deviation alarm band of 5°C activates the alarm output if the process variable is more than 5°C from set point.
- **Process Alarms** - active when the channel variable is outside the process limits. The process limits program the high and low limits of a test. For example, if the high process alarm limit is 125°C, the alarm is activated as soon as process variable goes above 125°C.

To use any of these outputs, connect the output and any 4800 Common pin to a TTL logic input.

AUXILIARY OUTPUTS

The auxiliary outputs provide programmable TTL level outputs. There are three groups of four auxiliary outputs. These outputs are programmed on and off during each program interval or during the Manual mode. These outputs are normally used to program systems on and off. Optional systems (i.e., Dry Air Purge) are often operated from an auxiliary relay. The auxiliary relay is operated by an auxiliary output, dedicating that output to the system.

All the unused auxiliary outputs are available for the user to connect to a TTL compatible input. To use an auxiliary output, use the Auxiliary Output pin and the Common output on the same connector. As an option, the user can have Thermotron install auxiliary relays on relay boards inside the chamber console for easy access.

EXTERNAL MODE AND CONDITION INPUT SIGNALS

these input signals allow the user to enable the modes and conditions listed below. The conditions are enabled when the input pin is pulled low (less than 0.7 volts).

- **Stop Input** places the 4800 in the Stop mode.
- **Run Input** returns the 4800 from the Hold mode to the Run mode.
- **Hold Input** places the 4800 in the Hold mode.
- **Restart Input** starts program 1 interval 1 from Stop.
- **Printer Trigger Input** provides the external printer trigger when pin 58 is pulled low. This trigger is enabled from the Printer/Time Clock Screen.
- **Keyboard Lockout** locks out the use of the numeric and function keypads.
- **Dual Humidity System Select Input** - selects the Linear RH input. Used on chambers with wet bulb/dry bulb and Linear RH humidity sensors. Also used during calibration.

MULTI-OPTION BOARD FUNCTIONS

The Multi-Option Board adds two analog outputs, a serial printer interface, and a real-time clock to the standard 4800.

- Analog Outputs 1 and 2 are voltage-only outputs used to re-transmit analog inputs or control variables to analog sensing devices.
- The printer interface allows the 4800 to send data to an external printer using an RS-232 interface.
- The real-time clock keeps track of the time and date. The time and date are used for delayed program starting and the time stamp for the printer interface data logging function.

COMPUTER INTERFACE BOARD

The Computer Interface Board allows the 4800 to interface with a Host Computer using the following three interfaces:

- IEEE-488 (1978) Standard Parallel Interface (GPIB)
- EIA RS-232 Standard Serial Interface
- RS-485 Standard Serial Interface

The configuration procedures are described later in this manual. If your system has a computer interface, refer to the 4800 Computer Interface Manual. The 4800 Programmer/Controller Computer Interface Manual provides a detailed I/O interface description and the I/O commands.

SECTION III
THEORY OF OPERATION

The 4800 provides programmed control of the temperature (and other variable) cycling operations for your chamber. This section describes the theory of the programmed operations. First, a general description of temperature cycling is provided. Next, a description of the parameters and their functions are provided. Finally, this section describes the operating modes. A brief description of how they are accessed and used is provided.

PROGRAMMED TEMPERATURE CYCLING OPERATIONS

The basic purpose of a chamber is to cycle the products thru a wide range of temperatures (and other variables).

- During temperature (or quality) testing, the temperatures are changed at a specified rate to verify product performance.
- During stress screening, the temperatures are changed as quickly as possible to force any early life failures on each product.

The 4800 is programmed to control these operations. The 4800 can also control other environmental conditions such as humidity, pressure, altitude, etc. Any other operations, such as electronic testing of the products, are not a function of the 4800 and are in addition to the basic chamber systems.

To perform temperature cycling, temperature profiles are written to control the chamber. Each temperature profile is structured using intervals. Each interval runs the chamber from an initial temperature to a final temperature in a specified amount of time. Each basic interval is programmed with the following entries:

1. **Initial Value** is programmed for the starting temperature of the interval. After the first interval, the starting temperature is actually the final temperature of the last interval.
2. **Final Value** is programmed for the Final temperature the chamber is to reach during that interval.
3. **Interval Time** is programmed to determine how fast the temperature is to be cycled from the initial temperature to the final temperature. The Interval Time has two methods of control:
   a. If a time greater than zero is entered, the 4800 performs a *temperature ramp*. This cycles the temperature evenly to the final temperature within the programmed time. (If too short of a time is programmed, the 4800 will transition to the next interval when the time runs out anyway.)
   b. If a zero time is entered, the 4800 performs a *guaranteed soak*. With zero time entered, the Continue Deviation value is displayed and programmed for temperature deviation from the final temperature. This cycles the temperature at maximum speed toward the final temperature. When the temperature reaches the final temperature ± the programmed temperature deviation, the 4800 transitions to the next interval.

4. **AUX GRP 1 thru AUX GRP 3** are programmed to turn on the auxiliary relay boards. Up to three groups of four solid state relays are provided on relay boards for programming auxiliary or optional systems ON and OFF. Each AUX GRP entry is programmed to enable or disable one group of four relays.

5. **Next Interval** is programmed to determine the next interval to be executed by the 4800. Two methods of programming can be selected.

   a. *Sequential* programming is selected by allowing the 4800 to increment to the next sequential interval.

   b. *Program looping* is selected by entering a target interval number that is less than or equal to the current interval number. When looping is selected, Number of Loops is programmed for the number of times the program is to execute series of intervals between the target interval and the present interval. When the program loops back to an interval, the program is executed from that interval to the interval with the programmed loop the entered number of times. The loop can be repeated up to 255 times. The following rules apply to looping (see the Looping drawing below):

      (1) The target interval must be less than or equal to the current interval.

      (2) The target interval must not cross into another loop. (When a loop is crossed, the target interval is between the beginning interval and ending interval of the loop.)

      (3) Nested looping is legal. In nested looping, one loop starts and finishes inside another loop. (Both loops can have the same target interval.)

      (4) The Final Value of the looping interval must be the same as the Initial Value of the target interval.

      (5) The maximum number of separate loop patterns per program is sixteen.

Using the above five program entry steps, a fairly complex temperature profile can be written. Repetitive tests can be looped and repeated rather than re-written. Fast temperature cycles are

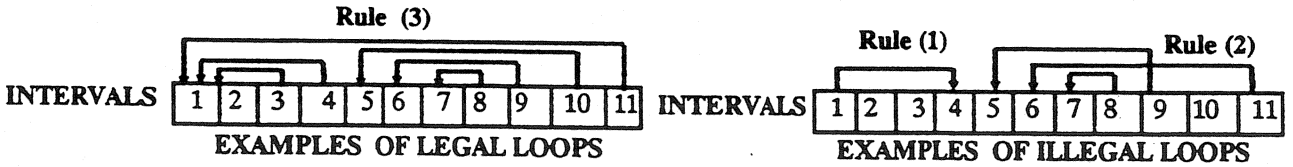

programmed using the guaranteed soak method. Controlled temperature cycles can be programmed using the ramp method.

During Channel 2 (Standard version) and Channel 3 operations, the profile becomes more complex. Each channel's variable is programmed with an Initial Value and Final Value. During guaranteed soaks one, two, or three channels can be programmed with a Continue Deviation.

PROGRAMMING THE PARAMETERS

The parameters adjust the heating and refrigeration systems automatically to provide peak performance. During temperature cycling, the refrigeration and heating systems must be damped as they approach the final temperature in the interval. This prevents overshooting and oscillation around the final temperature. In addition, lag times must be compensated for to maximize the temperature performance of the chamber. The 4800 provides five groups of parameters:

- Air control parameters for channel 1
- Channel 2 control parameters for the Standard version
- Load control parameters the PTC version
- Channel 3 control parameters for the optional third channel
- Refrigeration System Anticipator parameter for channel 1

These parameters are described in the following paragraphs.

AIR CONTROL PARAMETERS

The air control parameters tune up channel 1. Channel 1 controls the chamber from the chamber's thermocouple at the plenum. The parameters are described below.

Proportion Band Parameters

The **P-BAND** parameters set the proportional band width for heating and cooling separately. The P-BAND parameters are used for control at the chamber air. These parameters determine when the control switches from 100% output to a proportional output. As the temperature nears set point, it enters the P-BAND. Once inside the P-BAND, the throttle is backed off in proportion to the deviation between the set point and the chamber air temperature. The P-BAND settings are adjustable from 1 to 1000 units. The units are in degrees Celsius or Fahrenheit.

Integral Time Parameters

The **INTEGRAL TIME** parameters **compensate** for any **temperature droop** when the load approaches final set point. When the load is very close to final set point, the load has a tendency to lag just below the set point during heating cycles, and just above the set point during cooling cycles. The Integral Time parameters effectively adjust the set point up or down to compensate for the droop.

The Integral time parameters determine **how quickly the throttle will be adjusted** to compensate for droop. For instance, an integral time of 100 seconds will cause the 4800 to double the proportional throttle (given a constant error) in 100 seconds. Both parameters are programmable from 0 (Integral Off) to 1000 seconds.

Auxiliary Cooling System Parameter

The **AUX CLG** parameter operates an optional CO_2 or LN_2 cooling system. The parameter is programmed in percentage from 0 to 100%. When the cooling throttle is at -100%, the auxiliary cooling system operates the programmed percentage of a five second interval.

Programming the Proportion Band and Integral Time Parameters.

The **Proportion band and the Integral Time parameters** must be "tuned-up" to produce an efficient, controlled temperature cycle:

- If the **proportion band is too small**, the temperature will overshoot back and forth across the set point until it finally settles on the set point.
- If the **proportion band is too large**, the temperature will take too long to reach set point.
- If the **Integral Time is too long**, the temperature will overshoot set point slightly until it finally reaches the set point.
- If the **Integral Time is too short**, the temperature will oscillate at set point with increasing amplitude at the cost of heating and/or refrigeration hardware.

CHANNEL 2 CONTROL PARAMETERS (STANDARD VERSION)

The Channel 2 parameters tune up the system controlled by channel 2. These systems are normally variables, like humidity or altitude, other than temperature. The parameters are described below.

Proportion Band Parameters

The P-BAND parameters set the proportional band width for HEAT and COOL separately. Note that HEAT and COOL translates into high humidity and low humidity, pressure and vacuum, or whichever value applies to the variable. The P-BAND parameters determine when the control switches from 100% output to a proportional output. As the variable nears set point, it enters the P-BAND. Once inside the P-BAND, the throttle is backed off in proportion to the deviation between the set point and the chamber variable. The P-BAND settings are adjustable from 1 to 1000 units.

Integral Time Parameters

The INTEGRAL TIME parameters **compensate** for any **variable droop** when the load approaches final set point. When the load is very close to final set point, the load has a tendency to lag just below the set point during heating (high limit) cycles, and just above the set point during cooling (low limit) cycles. The Integral Time parameters effectively adjust the set point up or down to compensate for the droop.

The Integral time parameters determine **how quickly the throttle will be adjusted** to compensate for droop. For instance, an integral time of 100 seconds will cause the 4800 to double the proportional throttle (given a constant error) in 100 seconds. Both parameters are programmable from 0 (Integral Off) to 1000 seconds.

Programming the Proportion Band and Integral Time Parameters.

The **Proportion band and the Integral Time parameters** must be "tuned-up" to produce an efficient, controlled temperature cycle:

- If the **proportion band is too small**, the variable will overshoot back and forth across the set point until it finally settles on the set point.
- If the **proportion band is too large**, the variable will take too long to reach set point.
- If the **Integral Time is too long**, the variable will overshoot set point slightly until it finally reaches the set point.
- If the **Integral Time is too short**, the variable will oscillate at set point with increasing amplitude at the cost of system hardware.

LOAD CONTROL PARAMETERS (PTC VERSION)

During temperature cycling, the chamber is cycled to the final set point in the specified time interval. However, the product temperature will approach final set point at an exponentially decreasing rate, lagging behind the chamber air temperature.

The **PTC software** is written to offset the lag time. The software is written to sense two thermocouple inputs:

- one from the chamber air (**AIR**),
- and one from the product(s) under test (**LOAD**).

When **PTC** is ON, channels 1 and 2 are controlled from channel 2.

Offset Parameters

The **PTC** program provides a **selectable offset** for heat and cool cycles. The offset allows the chamber air (channel 1) to overshoot the final set point by up to 25°C. The **maximum offset** is programmed to allow the chamber air to overshoot the final set point by an amount that will not damage any portion of the load. For example:

- if the **final set point** is +100°C,
- and the load could be damaged by temperatures above 110°C,
- then the **maximum heat offset** would be 10°C.

Once the offset is selected, the chamber can be programmed according to the temperature at the product under test.

Gain Parameters

The **GAIN** parameters are related to the time constant of the load. (A load that requires more heating and cooling to change temperature has a higher time constant.) The greater the time constant of the load, the more gain is required to change the temperature of the load. If the gain is increased, the load will respond faster. In addition, a higher gain will start to proportion into the set point when the temperature is closer to the final set point.

The Gain parameters are used to adjust the **proportional band** of the load in relation to the programmed maximum offset. The **Gain** is related to the proportional band as follows:

$$\text{GAIN} = \frac{\text{MAXIMUM OFFSET}}{\text{PROPORTIONAL BAND}}$$

For example:

- if the **maximum offset** is 10°C,
- and the desired **proportional band** is 5°C,
- the gain would be:

  10°C / 5°C = 2

- If the desired **proportional band** is adjusted to 7°C, the gain would be:

  10°C / 7°C = 1.4

- If the **maximum offset** is increased to 12°C, the gain would be:

  12°C / 7°C = 1.7

Channel 1 will still perform using the **AIR** parameters. The offset parameters control the set point of channel 1 in relation to channel 2's final set point. When a PTC program is run, channel 1 immediately cycles beyond the final set point to the maximum offset. With the chamber air at maximum offset, the product cycles toward the final set point at its maximum rate. Channel 1 remains at maximum offset until the product temperature (channel 2) enters the proportion band near final set point. Channel 1 then proportions down to the final set point in relation to channel 2.

Integral Time Parameters

The **Integral Time parameters** are used to **compensate** for any **temperature droop** when the load approaches final set point. When the load is very close to final set point, the load has a tendency to lag just below the set point during heating cycles, and just above the set point during cooling cycles. The **Integral** function adjusts the set point up or down to compensate for the droop.

The Integral Time parameters are used to determine **how often the set point will be adjusted** to compensate for droop. For instance, an integral time of 100 seconds will cause the chamber to double the adjustment (given a constant error) every 100 seconds.

The Integral Time parameters are related to the time constant of the load. Loads with higher time constants change more slowly in reaction to stimuli. A load with a high time constant requires longer integral times, as the load will over-compensate in reaction to shorter integral times. Loads with lower time constants react more quickly to stimuli, and shorter integral times can be used.

Adjusting the PTC Parameters

The **Gain and the Integral Time parameters** must be "tuned" to produce an efficient, controlled temperature cycle:

- If the **gain is too large**, the temperature will overshoot back and forth across the set point until it finally settles on the set point.
- If the **gain is too small**, the temperature will take too long to reach set point.
- If the **Integral Time is too long**, the temperature will overshoot set point slightly until it finally reaches the set point.
- If the **Integral Time is too short**, the temperature will oscillate at set point with increasing amplitude at the cost of heating and/or refrigeration hardware.

Channel 3 Parameters (Optional)

The channel 3 parameters tune up an optional linear system. Channel 3 controls its chamber system from the system's sensing device. Although the 4800 displays HEAT and COOL parameters, the units are normally other values such as pressure in inches of mercury or altitude in Torr. Normally, the channel 3 variables only use one set of P-BAND and Integral parameters. Check the Configuration Sheet in front of this manual. The Control Mode has three modes:

- Control Mode 0 uses both the Heat and Cool parameters.
- Control Mode 1 uses only the Heat parameters.
- Control Mode 2 uses only the Cool parameters.

Proportion Band Parameters

The **P-BAND** parameters set the proportional band width for HEAT and COOL separately. The P-BAND parameters determine when the control switches from 100% output to a proportional output. As the variable nears set point, it enters the P-BAND. Once inside the P-BAND, the throttle is backed off in proportion to the deviation between the set point and the chamber variable. The P-BAND settings are adjustable from 1 to 1000 units.

Integral Time Parameters

The **INTEGRAL TIME** parameters **compensate** for any **variable droop** when the load approaches final set point. When the load is very close to final set point, the load has a tendency to lag just below the set point during heating (high limit) cycles, and just above the set point during cooling (low limit) cycles. The Integral Time parameters effectively adjust the set point up or down to compensate for the droop.

The Integral Time parameters determine **how quickly the throttle will be adjusted** to compensate for droop. For instance, an integral time of 100 seconds will cause the 4800 to double the proportional throttle (given a constant error) in 100 seconds. Both parameters are programmable from 0 (Integral Off) to 1000 seconds.

Programming the Proportion Band and Integral Time Parameters.

The **Proportion band and the Integral Time parameters** must be "tuned-up" to produce an efficient, controlled temperature cycle:

- If the **proportion band is too small**, the variable will overshoot back and forth across the set point until it finally settles on the set point.
- If the **proportion band is too large**, the variable will take too long to reach set point.
- If the **Integral Time is too long**, the variable will overshoot set point slightly until it finally reaches the set point.
- If the **Integral Time is too short**, the variable will oscillate at set point with increasing amplitude at the cost of system hardware.

REFRIGERATION SYSTEM ANTICIPATOR (RSA) PARAMETER

The **RSA** parameter is used to reduce refrigeration lag time caused by cooling the refrigeration hardware. To compensate for the lag time, the RSA parameter causes the system to "look ahead" to the next interval a set number of minutes. If the next interval is programmed for zero time (normally a guaranteed soak) and the set point is less than the current interval's final temperature, the refrigeration system is run in the bypass mode to pre-cool the condenser unit hardware. The RSA parameter is programmed to operate the pre-cool a set number of minutes before the zero time interval.

4800 OPERATING MODES

The 4800 has several modes of operation and parameter entry. There are six major mode categories:

- **STOP**
- **RUN**
- **PROGRAM**
- **HOLD**
- **SET UP**
- **LOCK**

The following paragraphs describe the different modes and their functions. Each mode is described, along with the keys that are pressed to access the modes.

STOP MODE

When the **STOP** key is pressed, the following data values can be entered:

- Set point(s)
- Channels 1 and 3 parameters
- Channel 2 parameters (Standard Version only)
- Multioption board settings

These parameters are often entered before starting the **RUN MANUAL** mode. If the values are entered in the **STOP** mode, the 4800 will immediately cycle toward the set point when **RUN MANUAL** mode is enabled using the entered parameters. Note that the PTC version programs the channel 2 parameters in the Setup mode.

RUN MODE

The **RUN** mode category operates the 4800 from the keypad. The 4800 can be operated in the **PROGRAM** or **MANUAL** modes.

1. The **RUN PROGRAM** mode runs the temperature profile programs entered into the 4800. Press **STOP/RUN/PROG** in sequence. Then work thru the 4800 prompts to select the program number to run and the starting interval.
2. The **RUN MANUAL** mode operates the 4800 from the keypad. Press **STOP/RUN/MAN** in sequence, and then use the **EDIT** key to edit the following parameters:
    - Air or Load set point (PTC Version)
    - Channel 2 set point when channel 2 is used (Standard Version)
    - Channel 3 set point when channel 3 is used
    - Auxiliaries
    - Channel 1 parameters
    - Channel 2 parameters (Standard Versions only)
    - Channel 3 parameters when channel 3 is used
    - Multioption board settings

The Set point selects a temperature or other condition to cycle to. During this mode, the 4800 programs are ignored. All the above values can be edited more than once without having to restart the **RUN MANUAL** mode.

PROGRAM MODE

The Program mode is used to enter the temperature profile programs. When **STOP/PROG** are pressed in sequence, the user is prompted to enter the values and selections for a program. The prompts are different for the PTC and Standard versions.

1. The PTC version's Program Mode only displays channel 1 for the Air or Load set points.
    - The entry programs channel 2 (Load) when **PTC** is **ON**
    - The entry programs channel 1 (Air) when **PTC** is **OFF**

    This method is used to provide simplicity of programming for the user. If channel 3 is used, the 4800 provides the channel 3 prompts as well.
2. The Standard version's Program Mode provides prompts for all the used channels.

Once a program is written, it may need to be changed. Press **STOP/PROG/EDIT** to select an interval to edit. You can edit that interval and any of the following intervals.

HOLD MODE

The **HOLD** mode suspends the program currently being executed. While a program is running, it can be placed in the **HOLD** state or the **SUSPENDED** state.

1. The **HOLD** state allows the data to be edited for one interval. Press **HOLD** to edit these values:
    - Final Value
    - Time Left
    - Loops Left
    - Auxiliaries

    When the program is run, the values entered in the **HOLD** state are executed once before the values default back to the original program's values. The Loops Left entry will count down to zero from the **HOLD** state entry before defaulting to the original program values.
2. The **SUSPENDED** state holds the current program while the user operates the chamber in the **MANUAL** mode. Press **HOLD/MAN** in sequence to suspend the program. Then operate the 4800 in the same manner as the **RUN MANUAL** mode. Press the **PROG/RUN** keys in sequence to return to the **RUN PROGRAM** mode. The original program then continues where it left off.

SETUP MODE CATEGORIES

The **SETUP** mode programs the 4800 with constant parameters and values. The SETUP mode provides the following categories:

- PTC Parameters
- Refrigeration System Anticipator (RSA)
- Program
- Set Alarms
- Display the internal Running Time Meters
- Calibrate
- RS-485 addressing and Prefix protocol

These categories are described below.

1. Use the **PTC Parameters** mode to set up the **LOAD** parameters. When **STOP/SETUP/2** are pressed in sequence, **PTC** can be turned **ON** and **OFF**, and the PTC parameter settings are entered.
2. Press **STOP/SETUP/1** in sequence to edit the **RSA** parameter.
3. The **Setup Program** mode enters the Auxiliary Relay configuration supplied with your 4800. When **STOP/SETUP/PROG** are pressed in sequence, the Setup Program mode is used to turn channel 3 and any of the three AUX groups ON or OFF.
4. Use the **Setup Alarm** mode to select which alarms to enable. Press **STOP/SETUP/Y** in sequence to enable or disable the following alarms:
   a. The **LOW VALUE** and **HIGH VALUE** for all used channels. If the process variables exceed these values, the alarm will be set off.
   b. The **DEVIATION BAND** for all used channels. If the process variables deviate from the current set point beyond the DEVIATION BAND, the alarm will be set off.

NOTE

When operating with PTC enabled, it is advisable to leave the channel 1 **DEVIATION BAND OFF.**

5. Press the **STOP/SETUP/TIME** keys in sequence to display the Running Time Meters. The meters display the run time for the chamber, refrigeration, and humidity systems.
6. Use the **Setup Calibrate** mode to calibrate the 4800 channel 1 and 2 thermocouple inputs, and any other analog inputs or outputs on the 4800. Press **STOP/SETUP/X** in sequence to display the analog channels for editing.
7. Press the **STOP/SETUP/0** keys in sequence to enter the RS-485 addressing and Prefix protocol parameters. See Section II of the **4800 Computer Interface Instruction Manual** to program these parameters.

LOCK MODE

The **LOCK** mode categories lock out the keyboard or program memory from normal use. This protects the programmed operations of the 4800.

1. When the proper keys are pressed in sequence, the keyboard is locked or unlocked. When the keyboard is locked, the only active keys are those that change the display selection.
2. When the proper keys are pressed in sequence, the program memory is locked or unlocked. When the program memory is locked, the only inactive sequence is **STOP/PROG**. When **STOP/PROG** is pressed, the 4800 displays **PROG LOCK** for one second.

SECTION IV
HOW TO PROGRAM AND OPERATE THE 4800

The 4800 can be operated in the Run Manual or Run Program mode. This section describes how to operate the chamber in either mode. The Manual mode procedure describes how to select a set point for each channel and how to operate the auxiliary outputs. The programming portion describes how to program and run a temperature profile. In addition, procedures are provided for the Hold and Suspended modes.

HOW TO OPERATE THE 4800 IN THE MANUAL MODE

The Manual Mode can cycle the chamber to a single set point for each channel. In addition, the Manual mode can operate each auxiliary output.

NOTE: The 4800 only displays the channels and auxiliary groups that are used in your system. Check your deep configuration to see which channels are used. (The deep configuration is provided in front of this manual or on an engineering drawing.) See Section VI to turn channel 3 and the auxiliary groups ON or OFF.

Follow this Procedure to operate the chamber in the Manual mode.

1. Press **STOP/RUN/MAN** in sequence. The **CHANNEL 1**, **RUN** and **MAN** lamps light and the chamber's systems are enabled. If channel 2 is used, the **CHANNEL 2** lamp lights as well.
2. To edit a set point, follow these steps.
   a. Toggle **VALUE** until the alpha display (AD) shows:

      SET-PNT

   b. To select a channel to edit, press the **CH1**, **CH2** or **CH3** key. The AD shows the channel and its variable. For example, channel 1 would show:

      SET-PNT 1C

NOTE: The PTC version does not use channel 2 - channel 1 operates according to the Load (PTC ON) or the Air (PTC OFF).

   c. Press **EDIT** until the **EDIT** lamp lights.
   d. Type in the new value and press **ENT**. The numeric display (ND) shows the new value and the **EDIT** lamp goes out. The 4800 cycles the chamber to the new set point.
   e. Repeat steps b thru d for each additional set point.

3. To edit an auxiliary group, follow these steps.
   a. Toggle **AUX** until the display shows the desired auxiliary group. For Example, auxiliary group 2 might show:

      AUX GRP 2

      1 - 3 -

      Note that the numbers indicate which auxiliaries within the group are ON.
   b. Press the **EDIT** key until the **EDIT** lamp lights.
   c. Type in the auxiliaries (1 thru 4) you want ON. (To turn unwanted auxiliaries OFF, press **CLR** first.)
   d. Press the **ENT** key. The ND shows the enabled auxiliary numbers and the **EDIT** lamp goes out. The 4800 turns the enabled auxiliaries ON.
   e. Repeat steps b thru d to change each additional auxiliary group.
4. Press **STOP** to stop the Manual mode operations.

NOTE: Other values can be edited in the Manual mode. See Table 4-1 on page 4-11. The procedures for editing these values are provided in Sections V and VI.

HOW TO PROGRAM THE TEMPERATURE PROFILES

The temperature profiles automatically operate the 4800 control functions. The 4800 can store up to ten temperature profiles in program storage. Program storage holds up to 255 total intervals, and any one program be 128 intervals long.

The Standard version and PTC version are programmed similarly, but they do have some differences.

1. The 4800 Standard version displays the Initial Value, Final Value, and Deviation entries for all the available channels.
2. The 4800 PTC uses channel 1 to program the Air or Load. Each program can be run with PTC ON or OFF. With PTC OFF, the program operates the chamber using AIR control and controls using the channel 1 thermocouple. With PTC ON, the program operates using LOAD control. Load control uses the channel 2 thermocouple for primary control and uses the PTC algorithm to control the Air. If channel 3 is enabled, the 4800 PTC version displays the Initial Value, Final Value, and Deviation entries for channel 3 as well.

NOTE: If needed, see Section VI to set up the program options and the PTC option. Remember that these are global settings that will apply to all the programs.

HOW TO ENTER A NEW PROGRAM

Follow these steps to enter a new program:

1. Press the **STOP** key and then the **PROG** key. The alpha display (AD) shows:

   PROG NMBR

   The numeric display (ND) indicates the lowest available program number.

2. Type in the desired program number and press **ENT**. The AD shows:

   INIT VAL 1

3. Type in the channel's starting value for the program and press **ENT**.

   a. If the 4800 is configured with more channels, the AD shows the Initial Value prompt for the next channel. Repeat step 3 until all Initial Values are entered.

   b. Once all the Initial Values are entered, the displays show:

   INTERVAL

   1

4. Press **ENT** to continue programming. The AD shows:

   FINL VAL 1

5. Type in the channel's Final Value for the interval and press **ENT**.

a. If the 4800 is configured with more channels, the AD shows the Final Value prompt for the next channel. Repeat step 5 until all Final Values are entered.

b. Once all the Final Values are entered, the display shows:

INTVL TIME

The Interval Time entry can be programmed for:

- a *controlled ramp* by entering an interval time between 1 minute and 24 hours, 59 minutes.
- a *timed soak period* by entering an interval time with the initial and final set points equal.
- a *guaranteed soak* by entering a 00:00 time interval.

6. Type in the hours, press the **./:** key, type in the minutes, and then press **ENT**.

a. If a time other than **00:00** is selected, the interval is programmed to ramp to the final temperature in the specified time. Go to step 8.

b. If a **00:00** time is selected, the AD shows:

CONT DEV-1

7. Type in a deviation between 0 and 15 and press **ENT**.

a. If the 4800 is configured with more channels, the AD shows the Deviation prompt for the next channel. Repeat step 7 until all deviations are entered.

b. Once all the deviations are entered, the following rules apply.

(1) If a **0** is selected for all channels, the program will immediately transition to the next interval.

(2) If a deviation other than **0** is entered on any channel, the program will cycle the temperature to the final temperature ± the deviation at the maximum speed, and then transition to the next interval.

NOTE: All Continue Deviation settings must be satisfied at the same time before the 4800 moves to the next interval. When entering multiple Continue Deviations, make sure each deviation is large enough to avoid "hanging-up" at the Final Value.

8. The AD shows:

AUX GRP 1

a. Use numeric keys **1 thru 4** to enable the auxiliary relays. (Press **CLR** first if any unwanted relays are ON.)

b. Press the **ENT** key.

c. If the 4800 PTC is set up for two or three AUX groups, the AD shows the next sequential AUX GRP. Repeat steps a and b until all the available AUX GRP's are programmed.

d. The AD shows:

NEXT INT?

9. Perform one of the following:

   a. To enter a programmed loop, follow this procedure:

   NOTE: If you are not familiar with the looping conventions or rules, review them before proceeding. Refer to Section II, page 3-2 under **Next Interval.**

      (1) Type in the target interval number to loop back to and press **ENT**. The AD shows:

      NMBR LOOPS

   NOTE: If the target interval entered would cause an illegal loop, **NEXT INT** is displayed again, and step (1) must be repeated.

      (2) Use the numeric keys to select up to 255 loops, and then press the **ENT** key. Go to step 10.

   b. If you are not programming a loop, press the **ENT** key.

10. The AD shows:

    INTERVAL

    The ND shows the next sequential interval.

NOTE: If the **STOP** key is pressed any time during programming before **INTERVAL** is displayed, the values entered in the current interval are deleted, and the 4800 returns to the Stop mode.

11. Perform one of these steps.

    a. To continue programming, perform the following:

       (1) Press the **ENT** key. The AD shows **FINL VAL 1** and the Final Value of the previous interval. (The Final Value of the previous interval is used as the initial value of next interval.)

       (2) Repeat steps 5 thru 10.

    b. To stop programming, press the **STOP** key. The alpha and numeric displays show the number of intervals left for two seconds, and then the 4800 PTC returns to the Stop mode. The program can now be reviewed, edited, or run.

HOW TO REVIEW OR EDIT A PROGRAM

Follow this procedure to edit or review a program.

1. Press **STOP** and then **PROG**. The alpha display (AD) shows:

   PROG NMBR

   The numeric display (ND) indicates the lowest available program number.

2. Type in the desired program number to edit and press **ENT**. The AD shows:

   PROG/EDIT

3. Press the **ENT** key. The following events occur.

   a. The displays show:

   INTV NMBR

   1

   b. The **EDIT** lamp lights. The **EDIT** lamp stays ON while you edit and review the temperature profile. (If the **EDIT** lamp goes out, you passed the original intervals and the 4800 is in the Program mode.)

4. Type in the interval number to edit and press **ENT**. One of the following events occurs.

   a. If you selected a nonexistent interval, the AD shows:

   NO INTVL

   Repeat step 4.

   b. If you selected an existing interval, the 4800 displays the first entry of the selected interval.

5. Use the **ENT** key to scroll thru the temperature profile. Use the numeric keypad to change a value.

6. Once you have scrolled thru the temperature profile, the **EDIT** lamp goes out and the 4800 goes into the Program mode. You can then continue adding new intervals to the temperature profile.

8. Press **STOP** at any time during the edit and review.

   a. If you press **STOP** before the **EDIT** lamp goes out, all edited values are saved.

   b. If you press **STOP** after the **EDIT** lamp goes out, you are actually in the Program mode. The 4800 stores all the values for the completed intervals.

   c. The ND shows the number of intervals left in storage for two seconds.

HOW TO DELETE ONE PROGRAM

Follow this procedure to delete one program.

1. Press **STOP** and then **PROG**. The alpha display (AD) shows:

   PROG NMBR

   The numeric display (ND) indicates the lowest available program number.

2. Type in the desired program number to delete and press **ENT**. The AD shows:

   PROG/EDIT

3. Perform one of these steps.

   a. To cancel the Delete, press **CLR** and then **STOP**. The 4800 returns to the Stop mode.

   b. To delete the program, press **PROG**. The 4800 deletes the program.

HOW TO DELETE ALL PROGRAMS

Follow this procedure to delete all the programs.

1. Press **STOP** and then **PROG**. The alpha display (AD) shows:

   PROG NMBR

   The numeric display (ND) indicates the lowest available program number.

2. Press **0** (zero) and then **ENT**. The AD shows:

   DEL ALL??

3. Perform one of these steps.

   a. To cancel the Delete process, press **CLR** and then **STOP**. The 4800 returns to the Stop mode.

   b. To delete all the programs, press **ENT**. The programs are deleted. The 4800 remains in the Program mode and the displays show:

   PROG NMBR

   1

HOW TO RUN A PROGRAM

Once the programs are entered, they can be run.

NOTE: If needed, see Section VI to set up the program options and the PTC option. Remember that these are global settings that will apply to all the programs.

Follow these steps to run a program.

1. Press **STOP/RUN/PROGRAM** in sequence. The **STOP**, **RUN** and **PROG** lamps light. The alpha display (AD) shows:

   PROG NMBR

2. Type in the program number to be run and press **ENT**. The AD shows:

   INTV NMBR

3. Type in the desired starting interval number and press **ENT**. One of the following occurs.

   a. If the 4800 does not have a Multioption Board, the **STOP** light goes out and the program starts from the selected interval. Go to step 7.

   b. If the 4800 has a Multioption board, the AD display shows:

   DLYD START

4. Perform one of these steps.

   a. To start the program right away, press **CLR**. The **STOP** light goes out and the program starts from the selected interval. Go to step 7.

   b. Press **ENT** to start the program at a specific date and time. The AD shows:

   START DATE

5. Type in the month, press ./:, type in the day, and press **ENT**. The AD shows:

   START TIME

6. Type in the hour (01 thru 24), press ./:, type in the minute (00 thru 60), and press **ENT**. When the 4800 reaches the entered date and time, the **STOP** lamp goes out and the program starts from the selected interval.

7. Press **STOP** at any time to stop the program.

HOW TO HOLD OR SUSPEND A PROGRAM

A running program can be placed in the Hold mode or Suspended mode.

- Use **Hold** to edit some programmed values for one interval. The other programmed values stay the same. The edited values are temporary and are lost after one interval. (The only exception is **Loops Left**, which changes the internal counter until the loops have counted down to zero.)
- Use **Suspend** to perform Manual mode operations while the program is on Hold.

HOW TO OPERATE IN THE HOLD MODE

Follow these steps to hold and temporarily edit a program.

NOTE: Any global values (i.e., Control Parameters, Time, Date, Print Interval) edited in the Hold mode are permanent changes. See Table 4-1 on page 4-11 for specific descriptions.

1. Press **HOLD** while a program is running. The following events occur.
   a. The **HOLD** lamp lights.
   b. The program holds at the current set point and suspends the interval clock at its current time. Note that all programmed values remain in program storage.
2. Follow these steps to edit one or more value.
   a. Press the proper Group key to display the selected value. See Table 4-1 on page 4-11.
   b. Press the **EDIT** key. The **EDIT** lamp lights.
   c. Type in the desired value and press **ENT**. The 4800 saves the program value in temporary storage. Any global values (i.e., Control Parameters, Time, Date, Print Interval) are permanent changes.
   d. Repeat steps a thru c to edit any other values.
3. Press **RUN** to continue the program. The program uses the edited values for the current interval. Once the program goes to the next interval, all the program edits are lost.

NOTE: When edited, the Loops Left value changes an internal counter. Once the loops count to zero, the program goes back to the original Loops Left values.

HOW TO OPERATE THE 4800 IN THE SUSPENDED MODE

Follow these steps to suspend a program and operate in the Manual mode.

NOTE: Any global values (i.e., Control Parameters, Time, Date, Print Interval) edited in the Suspended mode are permanent changes. See Table 4-1 on page 4-11 for specific descriptions.

1. Press **HOLD** and then **MAN** while a program is running. The following events occur.
   a. The **HOLD** and **MAN** lamps light.
   b. The program holds at the current set point and suspends the interval clock at its current time. Note that all programmed values remain in program storage.
   c. The 4800 can now be operated in the Manual mode.
2. Follow these steps to edit one or more value.
   a. Press the proper GROUP key to display the selected value. If needed, see Table 4-1 on page 4-11.
   b. Press the **EDIT** key. The **EDIT** lamp lights.
   c. Type in the desired value and press **ENT**. The 4800 changes the value. If the set point or auxiliary settings are edited, the 4800 operates using these values. If a global value is changed, the 4800 uses these values as permanent changes.
   d. Repeat steps a thru c to edit any other values.
3. Perform one of the following steps.
   a. Press **PROG** to return to the Hold mode. The following events occur.
      (1) The 4800 goes into the Hold mode.
      (2) The 4800 cycles toward the set point that was stored in step 1.b.

      See **How to Operate in the Hold Mode** to edit the program values.
   b. Press **PROG** and then **RUN** to continue the program. The following events occur.
      (1) The 4800 cycles toward the set point that was stored in step 1.b.
      (2) The program continues from where it left off.

WHAT DATA VALUES CAN BE EDITED IN THE STOP, MANUAL, HOLD AND SUSPENDED MODES

Table 4-1 describes all the edits allowed in the Stop, Manual, Hold and Suspended modes. The values are listed under the group keys you must press to display them.

Table 4-1. How the Data Values Can Be Edited.

Page 1 of 2

Group key/ Data Value	4800 Modes	Changes Allowed
VALUE GROUP KEY		
SET-PNT	Stop/Manual/Suspended	Change the set point for manual operations.
F-VALUE	Hold	Change the Final Values for each channel. These values are used for one interval only.
TIME GROUP KEY		
TIME LEFT	Hold	Change the time left for one interval.
TIME	Stop/Manual/Hold/Suspended	Multioption Board setting. Change the time of day. This global setting is placed in permanent storage.
DATE	Stop/Manual/Hold/Suspended	Multioption Board setting. Change the date. This global setting is placed in permanent storage.
PRINT INT	Stop/Manual/Hold/Suspended	Multioption Board setting. Change the print interval in seconds. Zero (0) disables the printer. This global setting is placed in permanent storage.
AUX GROUP KEY		
AUX GRP	Manual/Hold/Suspended	Change the auxiliary outputs for manual operations in the Manual or Suspended modes. Change the auxiliary outputs for one interval in the Hold mode. Press CLR to clear unwanted auxiliaries within a group.
LOOPS GROUP KEY		
LOOPS LEFT	Hold	The number of loops left can be changed for the current interval. This changes the loop counter for that interval. Once the loops count down, the original value is used. Note that for nested loops, only the innermost loop can be effectively edited - the outer loops will over-write the temporary storage after the first loop.

Table 4-1. How the Data Values Can Be Edited.

Page 2 of 2

Group key/ Data Value	4800 Modes	Changes Allowed
PARAM GROUP KEY		
HEAT PB	Stop/Manual/Hold/Suspended	Change the Heat Proportional Band to adjust control action for each standard (non-PTC) channel. This global setting is placed in permanent storage.
COOL PB	Stop/Manual/Hold/Suspended	Change the Cool Proportional Band to adjust control action for each standard channel. This global setting is placed in permanent storage.
HEAT IT	Stop/Manual/Hold/Suspended	Change the Heat Integral Time to adjust control action for each standard channel. This global setting is placed in permanent storage.
COOL IT	Stop/Manual/Hold/Suspended	Change the Cool Integral Time to adjust control action for each standard channel. This global setting is placed in permanent storage.
AUX CLG	Stop/Manual/Hold/Suspended	Change the auxiliary cooling cycle to reach proper auxiliary cooling control. This global setting is placed in permanent storage.

SECTION V
HOW TO TUNE UP THE CONTROL PARAMETERS

The control parameters determine how the 4800 controls the chamber's environmental systems around set point. The following paragraphs describe how to tune-up and adjust the control parameters.

HOW TO TUNE UP THE STANDARD VERSION AND PTC AIR CHANNEL PARAMETERS

The 4800 control parameters are tuned in the Manual mode. The only exception is the PTC Load parameters (see page 5-9). All the channels (except the PTC Load) can be tuned up similarly. Channel 1 is always the chamber air temperature. Both channel 2 (Standard version) and channel 3 can be configured to operate a wide variety of environmental systems, such as altitude, humidity, and pressure. Each system acts slightly differently than another. Some systems go straight to set point without oscillation, while other systems require careful tuning.

To tune up a channel, first establish the temperature (or other variable) range of the test. Once the range is established, the parameters can be tuned. Next, refer to the Control Mode parameter in the 4800 deep configuration. Your 4800 deep configuration is located in front of this manual or in an engineering.

- Control Mode 0 uses the heat and cool parameters.
- Control Mode 1 only uses the heat parameters. You can bypass the instructions for the Cool P-Band and Integral Time parameters.
- Control Mode 2 only uses the cool parameters. You can bypass the instructions for the Heat P-Band and Integral Time parameters.

When tuning up the chamber parameters, tune up one channel at a time. Channel 1 should be tuned up first to provide maximum performance for the temperature cycling. Then the other systems can be tuned.

The primary adjustments are made on the P-Band and Integral Time parameters. First tune the P-Bands for the heating and cooling cycles. Then tune Integral Times.

- If the P-Band is too small, the process variable overshoots back and forth across the set point until it finally settles on the set point.
- If the P-Band is too large, the process variable takes too long to reach set point.
- If the Integral Time is too long, the process variable overshoots set point slightly until it finally reaches the set point.
- If the Integral Time is too short, the process variable oscillates at set point with increasing amplitude at the cost of heating/refrigeration hardware.

The P-Band parameter is the coarse adjustment, and must be tuned up first. While tuning the P-Band, set the Integral Time parameters to 0 to avoid confusion. Once you have tuned up a P-Band, enter the original Integral Time parameter. Then tune up Integral parameters, providing the fine adjustment to the input channel. Repeat this process for the other P-Band/Integral Time pair. Refer to the parameter descriptions in Section III of this manual for more information.

SPECIAL CALCULATIONS FOR THE PTC VERSION

4800 PTC versions require special tuning considerations. Before tuning channel 1 (Air), perform the following calculations to determine the temperature range:

a. Determine the temperature range the products are to be cycled thru.

b. Calculate the maximum temperature extremes the products can withstand without being damaged. These values can be up to 25°C beyond the product temperature range.

c. Record the values in **b** to be used for the **AIR** control temperature limits.

d. Record the difference between the temperature extremes in **b** and the temperature range limits in **a**. These will be used as the **LOAD** control **OFFSET** parameters.

HOW TO TUNE UP THE PROPORTION BANDS

The proportion band parameters determine when the chamber will start proportioning into the final set point. The proportion band uses the same units (Fahrenheit or Celsius) as those for the process variable. To tune the proportion band, perform the following procedure:

NOTE: Your 4800 was factory tuned to meet the needs of your chamber and products. This procedure should not be performed unless the factory programming is inadvertently erased or the product requirements change enough to affect the performance of the chamber.

NOTE: In the following procedure, this manual uses 25% when adjusting the proportion band. Larger or smaller increments can be used.

Follow this procedure to tune-up the proportion bands.

1. Perform these steps when tuning channel 1 on PTC version controllers.
   a. Press the **STOP**, **SETUP**, **CH 2**, and **ENT** keys in sequence. The alpha display (AD) shows the PTC mode setting.
   b. Press the **CLR** key until the AD shows:

      PTC OFF

   c. Press the **ENT** key.
2. Press the **STOP** key and then the **CH1**, **CH2** or **CH3** key to display the desired channel.

3. Press the **PARAM** key until the AD shows:

   HEAT IT xx

   (xx = channel number and unit of measure for the selected channel)

   Record the existing value for use when tuning the integral time.

4. Press the **EDIT**, **0**, and **ENT** keys in sequence to clear the heat integral time. The AD shows:

   - - SAVING - -

5. Press the **PARAM** key until the AD shows:

   COOL IT xx

   Record the existing value for use when tuning the integral time.

6. Press the **EDIT**, **0**, and **ENT** keys in sequence to clear the cool integral time. The AD shows:

   - - SAVING - -

7. Press **RUN/MAN** in sequence. The **RUN**, **MAN** and **CHANNEL** lamps light.

8. Press the **VALUE** key until the AD shows:

   SET-PNT xx

9. Press **EDIT** until the **EDIT** lamp lights.

10. Use the numeric keys to select the upper limit of the test (i.e., 125 for °C, 100 for %RH, etc.). (For PTC versions, use the special values determined prior to this procedure.)

11. Press the **ENT** key. The ND shows the value and the **EDIT** lamp goes out. The chamber starts to cycle toward the set point.

12. Press the **CLR** key to display the process variable. The AD shows:

    VARIABL xx

13. Watch the process variable on the numeric display as it reaches the set point. The ideal channel 1 proportional band setting is obtained when the process variable is critically damped. This is obtained when the process variable slightly overshoots the set point (i.e., by 2°C). The process variable then oscillates across the set point in decreasing amounts until it droops just below set point.

14. If the chamber performance requires adjustment, perform these steps.

    a. Decrease the chamber set point by at least four times the proportional band setting.

       (1) Press the **VALUE** key until the AD shows:

       SET-PNT xx

       (2) Press the **EDIT** key.

       (3) Use the numeric keys to select the desired set point.

(4) Press the **ENT** key. The chamber starts to cycle toward the set point.

b. If the chamber overshot too much at the upper set point, increase the proportional band by approximately 25%.

(1) Press the **PARAM** key until the AD shows:

HEAT PB xx

(2) Press the **EDIT** key, increase the current value by 25% and press **ENT**. The AD shows:

- - SAVING - -

c. If the chamber barely or never reached the upper set point, decrease the proportional band by approximately 25%.

(1) Press the **PARAM** key until the AD shows:

HEAT PB xx

(2) Press the **EDIT** key, decrease the current value by 25% and press **ENT** . The AD shows:

- - SAVING - -

d. Wait for the process variable to reach the set point before proceeding.

15. Repeat steps **8 thru 14** until the process variable performs properly at the upper test limit. As the performance improves, the proportional band setting can be varied by amounts less than 25%.

16. Press the **VALUE** key until the AD shows:

SET - PNT xx

17. Press **EDIT** until the **EDIT** lamp lights..

18. Use the numeric keys to select the lower process variable limit of the test (i.e., -54 for °C, 5 for %RH, etc.). (For PTC versions, use the special values determined prior to this procedure.)

19. Press the **ENT** key. The ND shows the new value and the **EDIT** lamp goes out. The chamber starts to cycle toward the set point.

20. Press the **CLR** key to display the process variable. The AD shows:

VARIABL xx

21. Watch the process variable on the numeric display as it reaches the set point. For channel 1, the ideal proportional band setting is obtained when the process variable is critically damped. This is obtained when the process variable slightly overshoots the set point (i.e., by 2°C). The process variable then oscillates across the set point in decreasing amounts until it droops just above set point.

22. If the chamber performance requires adjustment, perform the following:
    a. Raise the chamber set point by at least four times the proportional band setting.
        (1) Press the **VALUE** key until the AD shows:

SET - PNT xx

        (2) Press the **EDIT** key.
        (3) Use the numeric keys to select the desired set point.
        (4) Press the **ENT** key. The chamber starts to heat toward the set point.
    b. If the chamber oscillated too much at the lower set point, increase the proportional band by approximately 25%.
        (1) Press the **PARAM** key until the AD shows:

COOL PB xx

        (2) Press the **EDIT** key, increase the current value by 25% and press **ENT**. The AD shows:

- - SAVING - -

    c. If the chamber barely or never reached the lower set point, decrease the proportional band by approximately 25%.
        (1) Press the **PARAM** key until the AD shows:

COOL PB xx

        (2) Press the **EDIT** key, decrease the current value by 25% and press **ENT**. The AD shows:

- - SAVING - -

    d. Wait for the process variable to reach the set point before proceeding.
23. Repeat steps **16 thru 22** until the process variable performs properly at the lower test limit. As the performance improves, the proportional band setting can be varied by amounts less than 25%.

HOW TO TUNE THE INTEGRAL TIME PARAMETERS

The integral time parameters control how often the chamber adjusts the set point as the process variable proportions into the final set point. The integral time has a range of 0 to 1000 seconds. A zero setting disables the integral function.

NOTE: In the following procedure, this manual uses 25% when adjusting the integral time. Larger or smaller increments can be used.

Follow this procedure to tune the integral time parameters.

1. Perform the tuning procedures for the proportional band.
2. With the 4800 still in the **RUN MANUAL** mode, press the **PARAM** key until the AD shows:

   HEAT IT xx

   (xx = channel number and unit of measure)
3. Press **EDIT** until the **EDIT** lamp lights.
4. Enter the recorded setting from step 3 of the proportional band tuning procedure, and then press the **ENT** key. The AD shows:

   - - SAVING - -
5. Press the **PARAM** key until the AD shows:

   COOL IT xx
6. Press **EDIT** until the **EDIT** lamp lights.
7. Enter the recorded setting from step 5 of the proportional band tuning procedure, and then press the **ENT** key. The AD shows:

   - - SAVING - -
8. Press the **VALUE** key until the AD shows:

   SET - PNT xx
9. Press **EDIT** until the **EDIT** lamp lights.
10. Use the numeric keys to select the upper limit of the test (i.e., 140 for °C, 98 for %RH, etc.). (For PTC versions, use the special values determined prior the proportional band procedure.)
11. Press the **ENT** key. The chamber starts to cycle toward set point.
12. Press the **CLR** key to display the process variable. The AD shows:

    VARIABL xx

13. Watch the process variable on the numeric display as it reaches the set point. For channel 1, the ideal integral time setting is obtained when the process variable is critically damped. This is obtained when the process variable slightly overshoots the set point (i.e., by 2°C). The process variable then oscillates across the set point once and then it rests at set point.

14. If the chamber performance requires adjustment, perform the following:

    a. Decrease the chamber set point by at least four times the proportional band setting.

       (1) Press the **VALUE** key until the AD shows:

SET - PNT xx

       (2) Press the **EDIT** key.

       (3) Use the numeric keys to select the desired set point.

       (4) Press the **ENT** key. The chamber starts to cycle toward set point.

    b. If the chamber oscillated too much at the upper set point, increase the integral time by approximately 25%.

       (1) Press the **PARAM** key until the AD shows:

HEAT IT xx

       (2) Press the **EDIT** key, increase the current value by 25% and press **ENT**. The AD shows:

- - SAVING - -

    c. If the chamber continues to oscillate slowly across the upper set point, decrease the proportional band by approximately 25%.

       (1) Press the **PARAM** key until the AD shows:

HEAT IT xx

       (2) Press the **EDIT** key, decrease the current value by 25% and press **ENT**. The AD shows:

- - SAVING - -

    d. Wait for the process variable to reach the set point before proceeding.

15. Repeat steps **8 thru 14** until the process variable performs properly at the upper test limit. As the performance improves, the integral time setting can be varied by amounts less than 25%.

16. Press the **VALUE** key until the AD shows:

SET PNT xx

17. Press **EDIT** until the **EDIT** lamp lights.

18. Use the numeric keys to select the lower limit of the test (i.e., -40 for °C, 20 for %RH, etc.). (For PTC versions, use the special values determined prior the proportional band procedure.)

19. Press the **ENT** key. The chamber starts to cycle toward set point.
20. Press the **CLR** key to display the process variable. The AD shows:

    VARIABL xx

21. Watch the process variable on the numeric display as it reaches the set point. For channel 1, the ideal integral setting is obtained when the process variable is critically damped. This is obtained when the process variable slightly overshoots the final set point (i.e., by 2°C). The process variable then oscillates across the set point once and then rests at set point.
22. If the chamber performance requires adjustment, perform these steps:
    a. Raise the chamber set point by at least four times the proportional band setting.
       (1) Press the **VALUE** key until the AD shows:

           SET - PNT xx

       (2) Press the **EDIT** key.
       (3) Use the numeric keys to select the desired set point.
       (4) Press the **ENT** key. The chamber starts to cycle toward the set point.
    b. If the chamber oscillated too much at the lower set point, increase the integral time by approximately 25%.
       (1) Press the **PARAM** key until the AD shows:

           COOL IT xx

       (2) Press the **EDIT** key, increase the current value by 25% and press **ENT.** The AD shows:

           - - SAVING - -

    c. If the chamber continued to oscillate slowly across the lower set point, decrease the integral time by approximately 25%.
       (1) Press the **PARAM** key until the AD shows:

           COOL IT xx

       (2) Press the EDIT key, decrease the current value by 25% and press **ENT.** The AD shows:

           - - SAVING - -

    d. Wait for the process variable to reach the set point before proceeding.
21. Repeat steps **14 thru 20** until the process variable performs properly at the lower test limit. As the performance improves, the proportional band setting can be varied by amounts less than 25%.

HOW TO TUNE UP THE PTC LOAD PARAMETERS

Once the chamber AIR parameters have been properly adjusted, the chamber LOAD parameters are tuned with the products inside the chamber. First, the cool and heat offsets are entered. Next, the gain parameters are tuned. Finally, the integral time parameters are tuned.

The **Gain and the Integral Time parameters** must be "tuned" to produce an efficient, controlled temperature cycle:

- If the **gain is too large**, the temperature will overshoot back and forth across the set point until it finally settles on the set point.
- If the **gain is too small**, the temperature will take too long to reach set point.
- If the **Integral Time is too long**, the temperature will overshoot set point slightly until it finally reaches the set point.
- If the **Integral Time is too short**, the temperature will oscillate at set point with increasing amplitude at the cost of heating and/or refrigeration hardware.

HOW TO TUNE THE GAIN PARAMETERS FOR THE PTC LOAD CHANNEL

The gain parameters determine when the chamber will start proportioning into the final set point.

NOTE: In the following procedure, this manual uses 0.5 units when adjusting the gain. Larger or smaller increments can be used.

Follow this procedure to tune the gain parameters.

1. Press the **STOP**, **SETUP**, **CH 2**, and **ENT** keys in sequence. The alpha display (AD) shows the PTC mode setting.
2. Press the **CLR** key until the AD shows:

   PTC ON

3. Press the **ENT** key. The AD shows:

   SET PARMS?

4. Press the **ENT** key. The AD shows:

   HEAT GAIN

5. Use the numeric keys to select a gain of 2.0 and press **ENT**. The AD shows:

   COOL GAIN

6. Use the numeric keys to select a gain of 2.0 and press **ENT**. the AD shows:

   HEAT INTGR

7. Use the numeric keys to select a 150 second integral time and press **ENT**. the AD shows:

   COOL INTGR

8. Use the numeric keys to select a 150 second integral time, and then press the **ENT** key. the AD shows:

   HEAT OFSET

9. Use the numeric keys to enter the heat offset determined before tuning the proportional band for channel 1. Press the **ENT** key. the AD shows:

   COOL OFSET

10. Use the numeric keys to enter the cool offset determined before tuning the proportional band for channel 1. Then press the **ENT** key. The AD shows:

    OK TO SAVE

11. Press the **ENT** key to save the new values. The AD shows:

    - - SAVING - -

    The 4800 then returns to the **STOP** mode.

12. Write a program for use in testing the Load parameters. If needed, refer to the programming procedures on page 4-3.

    a. For interval 1, program a guaranteed soak. Cycle the chamber temperature to 20°C below the upper limit of the tests to be run. Enter the following values:

       - Initial Value = 25°C
       - Final Value = 20°C below the upper limit of the tests
       - Interval time = 00:00
       - Continue Deviation = 2°C
       - AUX Values = Use the normal program states for your chamber
       - Next Interval = Interval 2 (press ENT)

    b. For interval 2, soak the chamber at the present temperature. Enter the following values:

       - Final Value = 20°C below the upper limit of the tests
       - Interval time = 00:15
       - AUX Values = Use the normal program states for your chamber
       - Next Interval = Interval 3 (press ENT)

c. For interval 3, program a guaranteed soak. Cycle the chamber temperature to the upper limit of the tests to be run. Enter the following values:

- Final Value = the upper limit of the tests
- Interval time = 00:00
- Continue Deviation = 2°C
- AUX Values = Use the normal program states for your chamber
- Next Interval = Interval 4 (press ENT)

d. For interval 4, soak the chamber at the present temperature. Enter the following values:

- Final Value = the upper limit of the tests
- Interval time = 00:05
- AUX Values = Use the normal program states for your chamber
- Next Interval = Interval 1
- Number of loops = 2

e. For interval 5, program a guaranteed soak. Cycle the chamber temperature to 20°C above the lower limit of the tests to be run. Enter the following values:

- Final Value = 20°C above the lower limit of the tests
- Interval time = 00:00
- Continue Deviation = 2°C
- AUX Values = Use the normal program states for your chamber
- Next Interval = Interval 6 (press ENT)

f. For interval 6, soak the chamber at the present temperature. Enter the following values:

- Final Value = 20°C above the lower limit of the tests
- Interval time = 00:15
- AUX Values = Use the normal program states for your chamber
- Next Interval = Interval 7 (press ENT)

g. For interval 7, program a guaranteed soak. Cycle the chamber temperature to the lower limit of the tests to be run. Enter the following values:

- Final Value = the lower limit of the tests
- Interval time = 00:00
- Continue Deviation = 2°C
- AUX Values = Use the normal program states for your chamber
- Next Interval = Interval 8 (press ENT)

h. For interval 8, soak the chamber at the present temperature. Enter the following values:

- Final Value = the lower limit of the tests
- Interval time = 00:05
- AUX Values = Use the normal program states for your chamber
- Next Interval = Interval 5
- Number of loops = 2

13. Run the program.

a. Press the **STOP**, **RUN**, and **PROG** keys in sequence. The AD shows:

PROG NMBR

b. Use the numeric keys to select the program written in step 12, and then press the **ENT** key. The AD shows:

INTV NMBR

c. Press 1 and then **ENT** to start the program at interval 1.

NOTE: If your 4800 is equipped with a Multioption Board, the AD shows **DLYD START**. Press the **CLR** key to start the program immediately.

14. Display the process variable on the 4800.

a. Press the **VALUE** key, and then the **CH 2** key.

b. Press the **VALUE** key until the AD shows:

VARIABL 2C

At this point, the 4800 does not need to be monitored for fifteen to twenty minutes (during intervals 1 and 2). Intervals 3 and 4 are the critical intervals which require monitoring.

15. As the chamber proportions into the final set point of interval 3, monitor the process variable values on the numeric display. For channel 2, the ideal gain setting is obtained when the process variable is over damped. This is accomplished when the chamber does not overshoot the final set point while maintaining minimum droop. The process variable droops when it never reaches set point.

16. If the gain requires adjusting, perform the following:

a. Press the **STOP**, **SETUP**, and **CH 2** keys in sequence. The AD shows:

PTC ON

b. Press the **ENT** key until the AD shows:

HEAT GAIN

c. If the process variable overshot the final set point in step 15, decrease the gain by 0.5 units. Use the numeric keys to enter the new value.

d. If the process variable never reached the final set point in step 15, increase the gain by 0.5 units. Use the numeric keys to enter the new value.

e. Press the **ENT** key until the AD shows:

```
- - SAVING - -
```

17. Repeat steps **13 thru 16** until the process variable performs correctly at the upper temperature limit. As the performance improves, the gain setting can be varied by values less than 0.5 units.

18. Run the program written in step 12.

a. Press the **STOP**, **RUN**, and **PROG** keys in sequence. The AD shows:

```
PROG NMBR
```

b. Use the numeric keys to select the program written in step 12, and then press the **ENT** key. The AD shows:

```
INTV NMBR
```

c. Press **5** and then **ENT** to start the program at interval 5.

NOTE: If your 4800 is equipped with a Multioption Board, the AD shows **DLYD START**. Press the **CLR** key to start the program immediately.

19. Display the process variable on the 4800.

a. Press the **VALUE** key, and then the **CH 2** key.

b. Press the **VALUE** key until the AD shows:

```
VARIABL 2C
```

At this point, the 4800 does not need to be monitored for fifteen to twenty minutes (during intervals 5 and 6). Intervals 7 and 8 are the critical intervals which require monitoring.

20. As the chamber proportions into the final set point of interval 7, monitor the process variable values on the numeric display. For channel 2, the ideal gain setting is obtained when the process variable is over damped. This is accomplished when the chamber does not overshoot the final set point while maintaining minimum droop. The process variable droops when it never reaches set point.

21. If the gain requires adjusting, perform the following:

a. Press the **STOP**, **SETUP**, and **CH 2** keys in sequence. The AD shows:

```
PTC ON
```

b. Press the **ENT** key until the AD shows:

```
COOL GAIN
```

c. If the process variable overshot the final set point in step 20, decrease the gain by 0.5 units. Use the numeric keys to enter the new value.

d. If the process variable never reached the final set point in step 20, increase the gain by 0.5 units. Use the numeric keys to enter the new value.

e. Press the **ENT** key until the AD shows:

- - SAVING - -

22. Repeat steps **18 thru 21** until the process variable performs correctly at the lower temperature limit. As the performance improves, the gain setting can be varied by values less than 0.5 units.

HOW TO TUNE THE INTEGRAL TIME PARAMETERS FOR THE PTC LOAD

The integral time parameters determine how often the chamber adjusts the set point as the process variable proportions into the final temperature set point. The integral time has a range of 10 to 1000 seconds. A zero setting disables the integral function.

NOTE: In the following procedure, this manual uses 40 seconds when adjusting the integral times. Larger or smaller increments can be used.

Follow this procedure to tune the integral parameters:

1. Perform the tuning procedures for the channel 2 gain parameters.
2. Run the program written during the tuning procedures for the channel 2 gain parameters.
   a. Press the **STOP**, **RUN**, and **PROG** keys in sequence. The AD shows:

PROG NMBR

   b. Use the numeric keys to select the program written in step 12 of the gain procedures, and then press the **ENT** key. The AD shows:

INTV NMBR

   c. Press **1** and then **ENT** to start the program at interval 1.

NOTE: If your 4800 is equipped with a Multioption Board, the AD shows **DLYD START**. Press the **CLR** key to start the program immediately.

3. Display the process variable on the 4800.
   a. Press the **VALUE** key, and then the **CH 2** key.
   b. Press the **VALUE** key until the AD shows:

VARIABL 2C

   At this point, the 4800 does not need to be monitored for fifteen to twenty minutes (during intervals 1 and 2). Intervals 3 and 4 are the critical intervals which require monitoring.

4. As the chamber proportions into the final set point of interval 3, monitor the process variable values on the numeric display. For channel 2, the ideal integral time setting is obtained when the process variable is over damped. This is accomplished when the

chamber does not oscillate at the final set point while maintaining minimum droop. The process variable droops when it never reaches set point.

5. If the integral time requires adjusting, perform the following:
   a. Press the **STOP**, **SETUP**, and **CH 2** keys in sequence. The AD shows:

      HEAT INTGR

   b. Press the **ENT** key until the AD shows:

      - - SAVING - -

   c. If the process variable oscillated at the final set point in step 4, increase the integral time by 40 seconds. Use the numeric keys to enter the new value.
   d. If the process variable never reached the final set point in step 4, decrease the integral time by 40 seconds. Use the numeric keys to enter the new value.
   e. Press the **ENT** key until the AD shows:
6. Repeat steps **2 thru 5** until the process variable performs correctly at the upper temperature limit. As the performance improves, the integral time setting can be varied by values less than 40 seconds.
7. Run the program.
   a. Press the **STOP**, **RUN**, and **PROG** keys in sequence. The AD shows:

      PROG NMBR

   b. Use the numeric keys to select the program written in step 12 of the gain tuning procedure, and then press the **ENT** key. The AD shows:

      INTV NMBR

   c. Press **5** and then **ENT** to start the program at interval 5.

NOTE: If your 4800 is equipped with a Multioption Board, the AD shows **DLYD START**. Press the **CLR** key to start the program immediately.

8. Display the process variable on the 4800.
   a. Press the **VALUE** key, and then the **CH 2** key.
   b. Press the **VALUE** key until the AD shows:

      VARIABL 2C

   At this point, the 4800 does not need to be monitored for fifteen to twenty minutes (during intervals 5 and 6). Intervals 7 and 8 are the critical intervals which require monitoring.

9. As the chamber proportions into the final set point of interval 7, monitor the process variable values on the numeric display. For channel 2, the ideal integral time setting is obtained when the process variable is over damped. This is accomplished when the chamber does not overshoot the final set point while maintaining minimum droop. The process variable droops when it never reaches set point.
10. If the integral time requires adjusting, perform the following:
    a. Press the **STOP**, **SETUP**, and **CH 2** keys in sequence. The AD shows:

       PTC ON

    b. Press the **ENT** key until the AD shows:

       COOL INTGR

    c. If the process variable oscillated at the final set point in step 9, increase the integral time by 40 seconds. Use the numeric keys to enter the new value.
    d. If the process variable never reached the final set point in step 9, decrease the integral time by 40 seconds. Use the numeric keys to enter the new value.
    e. Press the **ENT** key until the AD shows:

       - - SAVING - -

11. Repeat steps **7 thru 10** until the process variable performs correctly at the lower temperature limit. As the performance improves, the integral time setting can be varied by values less than 40 seconds.

SECTION VI
HOW TO ENTER OR VIEW THE SETUP MODE PARAMETERS

The **SETUP** mode programs the 4800 with constant parameters and values. The Setup mode provides the following categories:

- PTC Parameters
- Refrigeration System Anticipator (RSA)
- Program (Channel 3 and Auxiliaries)
- Set Alarms
- Display the internal Running Time Meters
- Calibrate
- RS-485 addressing and Prefix protocol

This section describes how to enter all the Setup mode parameters except the PTC tuning parameters and RS-485 parameters.

- Refer to Section V to tune up the PTC parameters.
- Refer to the 4800 Computer Interface manual to setup the RS-485 parameters.

In addition, this section describes how to set the time and date for 4800 Programmer/Controllers equipped with Multioption Boards.

HOW TO TURN PTC ON AND OFF

The PTC parameter determines whether the 4800 operates using LOAD control or AIR control. When PTC is ON, the LOAD control is enabled, and only channel 2 can be operated from the MANUAL mode. (Channel 1 operates in relation to channel 2 when PTC is ON.) When PTC is OFF, the AIR control is enabled, and only channel 1 can be operated from the MANUAL mode.

To set up the PTC parameter, perform the following procedure.

1. Press the **STOP**, **SETUP**, and **CH 2** keys in sequence. The AD shows:

   PTC ON

   OR

   PTC OFF

2. Press the **CLR** key until the PTC parameter displays the proper state.
3. Press the **ENT** key and then the **STOP** key. The 4800 returns to the Stop mode.

HOW TO SET UP THE REFRIGERATION SYSTEM ANTICIPATOR (RSA) PARAMETER

The RSA parameter reduces refrigeration lag time caused by cooling the refrigeration hardware. To compensate for the lag time, the RSA parameter causes the system to "look ahead" to the next interval a set number of minutes. If the next interval is programmed for zero time (normally a guaranteed soak) and the set point is less than the current interval's final temperature, RSA runs the refrigeration system in the bypass mode to pre-cool the condenser unit hardware. The RSA parameter operates the pre-cool a set number of minutes before the zero time interval.

Follow this procedure to set up the RSA parameter.

1. Press the **STOP**, **SETUP**, **CH 1** and **ENT** keys in sequence. The AD shows:

   RSA TIME

2. Type in the desired number of minutes (0 to 15) and press **ENT**. The AD shows:

   OK TO SAVE

3. Press **ENT** to save the new RSA time. The 4800 saves the entry and returns to the Stop mode.

NOTE: Thermotron sets the RSA time for two minutes. Any time less than two minutes does not show significant reduction in lag time. If too much time is programmed, the R-502 or R-22 system's thermostatic expansion valve closes down, and requires additional time to open once the cooling interval begins.

HOW TO SET UP CHANNEL 3 AND THE AUXILIARY GROUPS

The 4800 can be equipped with a third channel and up to three groups of four auxiliary relays. Channel 3 provides an additional linear input control channel. The auxiliary relays supply TTL ON/OFF control to auxiliary or customer supplied systems. This procedure programs the 4800 software to set up channel 3 and the auxiliary group assignments.

Follow this procedure to set up channel 3 and the auxiliary groups.

1. Press the **STOP**, **SETUP**, and **PROG** keys in sequence. The AD shows:

   CHAN 3 ON

   OR

   CHAN 3 OFF

2. To change the channel 3 setting, press **CLR** and then **ENT**. The AD shows:

   AUX 1 ON

   OR

   AUX 1 OFF

3. To change the auxiliary group setting, press **CLR** and then **ENT**. The AD shows the next auxiliary group setting.
4. Repeat step 3 for auxiliary groups 2 and 3. The 4800 records the values and then returns to the Stop mode.

HOW TO SET UP THE ALARMS

The 4800 can be programmed to alarm the limits of the process variable (PV) and/or the deviation from set point.

1. The PV alarm monitors the variable temperature in regards to a high and low limit. Customer specified limits are programmed into the 4800. If the temperature exceeds the limits, the 4800 goes into a Stop mode and the alpha display flashes. The limits are provided in the 4800 configuration sheet. This sheet is found in the drawing section on the instrumentation print or is a separate sheet placed in front of this manual.
2. The deviation alarm monitors the variable in regards to a ± tolerance around the set point. If the variable deviates more than the set deviation alarm limit (for example, 5°C) from the set point, the alpha display flashes to alert the operator that a problem may exist. The deviation alarm setting limits are 0 to 25 units (°F,°C or %RH). Note that a setting of 0 for this alarm means no tolerance at all. To turn an alarm off, depress **CLR** when the alarm setting is prompted.

Both alarms are available for all three channels. When an alarm is enabled, it outputs thru a specific Solid State Relay (SSR) output on the Function Board. See the 2800/4800 Troubleshooting Guide for the SSR listing. When any alarm is enabled for channel 1 or 2, the alarm output (CH1 = TB2-2, CH2 = TB2-9 on the main board) ranges from 3.2 to 5.0 Vdc. In an unselected state, the range is 0 to 0.5 Vdc.

Follow these steps to set the desired alarms:

1. Press the **STOP**, **SETUP**, and hidden **Y** key in sequence. The alpha display (AD) shows:

   ALARM COND

2. Depress the **ENT** key. The AD shows:

   SET CH1 AL

3. Follow these steps.

   a. If you do not need to edit the displayed channel's alarms, toggle **CLR** to display the desired channel selection. The alpha display shows:

   SET CH2 AL

   OR

   SET CH3 AL

   b. Press **ENT** to edit the displayed channel's alarms. The AD shows:

   PROCESS ?

4. Perform one of these steps.
   a. To bypass the process variable alarm, press **CLR**. The AD shows:

      DEVIATION

      Go to step 7.
   b. To edit the process alarm, press **ENT**. The AD shows:

      CHx LO VAL

      (x = channel number)
5. Key in the process variable's low limit alarm and press **ENT**. The AD shows:

   CHx HI VAL
6. Key in the process variable's high limit alarm and press **ENT**. The AD shows:

   DEVIATION
7. Perform one of these steps.
   a. To bypass the channel's deviation alarm, press **CLR**. The AD shows:

      SET CHx AL

      Go to step 9.
   b. To edit the channel's deviation alarm, press **ENT**. The AD shows:

      CHx DV - BND
8. Key in the desired deviation from set point (0 to 25 units) and press **ENT**. the AD displays:

   SET CHx AL
9. Follow one of these steps.
   a. Go to step 3 to continue editing the alarms.
   b. Toggle the **CLR** key until the AD displays:

      OK TO SAVE
10. Follow one of these steps.
   a. Press **ENT** to save your edits.
      (1) The AD shows:

      - - SAVING - -

      (2) The 4800 saves the new values and then goes into the Stop mode.

b. Press CLR to lose your edits.

(1) The AD shows:

OLD VALUES

(2) The 4800 goes into the Stop mode.

HOW TO VIEW THE RUNNING TIME METERS

Starting with software version V2.01.00, the 4800 Programmer/Controller includes running time (RT) meters. The RT meters accumulate running time hours based on inputs from the 4800. The RT meters monitor the following signals to accumulate the running time:

- The **CHAMBER** RT monitors the System Enable signal.
- The **REFRIGERATION SYSTEM** RT monitors the Refrigeration Enable signal.
- The **HUMIDITY SYSTEM** RT monitors the Humidity Enable signal.

NOTE: The 4800 causes the RT meters to accumulate time based on the signals to the chamber, refrigeration and humidity systems. If power is not actually applied to the systems while the 4800 is sending the control signals, the accumulated run times will be inaccurate. The RT meters are not user adjustable.

Follow this procedure to view the run times:

1. Press the **STOP**, **SETUP** and **TIME** keys in sequence. The alpha display (AD) shows:

   RUN TIMERS

2. Depress the **ENT** key. The AD shows:

   CBR #####

   CBR denotes chamber run time. Up to a five-digit number will appear in the area represented by #####. This number is the amount of accumulated hours (00001 to 99,999).

3. To display the refrigeration system run time, press the **ENT** key. The alpha display shows:

   REF #####

4. To display the humidity system run time, press the **ENT** key. If you have a humidity system, The AD shows:

   HUM #####

5. To return to the normal display, press any key. If any key other than **ENT** is pressed during steps 2 thru 4, the 4800 returns to the normal display.

HOW TO ENTER THE TIME AND DATE

4800 Programmer/Controllers equipped with Multioption Boards have a real-time clock. The real-time clock can be set from the **STOP, RUN MANUAL,** or **PROGRAM HOLD** modes.

Follow these steps to set the real-time clock.

1. Toggle the **TIME** key until the alpha display (AD) shows:

   TIME

2. Key in the hours (01-24), press ./:, key in the minutes (00-60), and press **ENT**. (Use a 24 hour clock where 1:15 p.m. is entered as 13:15.) The clock continues keeping time from the hour and minute you entered.
3. Toggle the **TIME** key until the AD shows:

   DATE

4. Key in the month (1-12), press ./:, key in the day (1-31), and press **ENT**. The clock continues keeping the date from the month and day you entered.

NOTE: The 4800 does not have a leap year function. Reset the date after February 29 of each leap year.

HOW TO SET THE AUXILIARY COOLING PARAMETER

Some chambers are equipped with optional liquid nitrogen (LN_2) or carbon dioxide (CO_2) auxiliary cooling systems. When the refrigeration system is operating at full cooling throttle, the auxiliary cooling system can be operated for a programmed percentage of a five-second interval.

For example, if you set the auxiliary cooling parameter to 30, the auxiliary cooling system comes on for 1.5 seconds (30% of five seconds) and then goes off for the remaining 3.5 seconds of the five-second interval. If you set the parameter to 100, the auxiliary cooling system comes on and stays on for as long as the refrigeration system is operating at full cooling throttle. Follow these steps to review or edit the auxiliary cooling parameter:

1. Press **PARAM** repeatedly until the alpha display shows:

   AUX CLG 1P

   and the numeric display shows the current auxiliary cooling parameter.
2. To change the auxiliary cooling parameter, press **EDIT**. The EDIT LED lights.
3. Enter the new parameter and press **ENT**. The EDIT LED goes out. When the refrigeration system is operating at 100% cooling throttle, the auxiliary cooling system will operate for the programmed percentage of a five-second interval.

HOW TO CALIBRATE THE ANALOG INPUT AND OUTPUT CHANNELS

The following procedures describe how to calibrate the analog input and output channels. The input calibration calibrates channels 1, 2 and 3.

- Channel 1 is always a thermocouple input channel.
- Channel 2 can be a thermocouple or linear input channel.
- Channel 3 is always a linear input channel.

The following test equipment is required for calibration:

- Variable AC Power Supply
- Thermocouple Potentiometer
- Digital Voltmeter

Follow this procedure to calibrate the analog channels.

1. Connect a thermocouple potentiometer to TB1 on the Main board. Refer to Figs. 6-2 and 6-3 for the potentiometer and jumper connections. The jumper connections are needed when channel 2 is configured as a thermocouple input channel. Wait 10 minutes for the temperature at the terminal block to stabilize.
2. Depress the **STOP, SETUP** , and hidden **X** keys in sequence. The alpha display (AD) shows:

   CALIBRATE

3. Perform one of these steps.
   a. If calibration is needed, press **ENT**. The AD shows:

      CALIB T/C

   b. If calibration is not needed, toggle the **CLR** key until the alpha display briefly shows:

      OLD VALUES

      The 4800 leaves the Setup mode.
4. Perform one of these steps.
   a. Press **ENT** to calibrate the thermocouple input channel(s). The AD shows:

      ZERO VALUE

      Go to step 5, the thermocouple input calibration procedure.
   b. Press **CLR** to bypass the thermocouple input channel calibration. The AD shows:

      CALIB AIN

      Go to step 6, the non-thermocouple input channel calibration procedure.

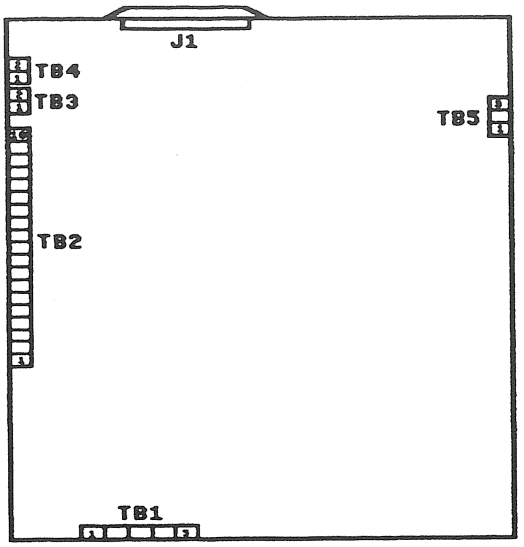

Figure 6-1. Main Board Terminal Locations.

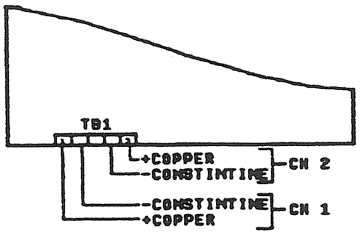

Figure 6-2. Thermocouple Potentiometer locations.

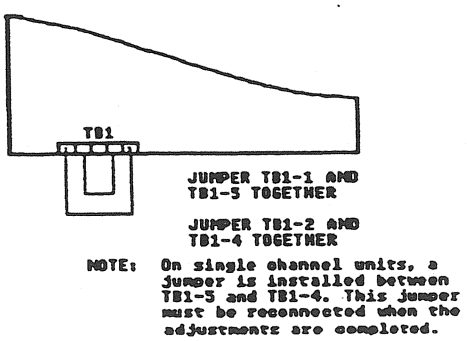

Figure 6-3. Channel 1 and 2 Thermocouple Jumper Connections.

5. Follow these steps to perform the *thermocouple input channel calibration*:
   a. At this point, the AD shows:

      ZERO VALUE

   b. If needed, key in the lowest value you need the channel to measure. Note that this value may already be displayed. (The original value was factory set for your chamber.)
   c. Set the output of the potentiometer to the value shown on the numeric display.
   d. Press the **ENT** key. the AD shows:

      – BUSY –

      DO NOT change the setting while the alpha display shows BUSY. After about twenty seconds, the AD shows:

      SPAN VALUE

   e. If needed, key in the highest value you need the channel to measure. Note that this value may already be displayed. (The original value was factory set for your chamber.)
   f. Set the output of the potentiometer to the value shown on the numeric display.
   g. Press the **ENT** key. the AD shows:

      – BUSY –

      DO NOT change the setting while the alpha display shows BUSY. After about twenty seconds, the AD shows:

      CALIB AIN

      Go to step 6.
6. This step starts the *analog input calibration* for the non-thermocouple input channel(s). Note that the 4800 automatically bypasses channel 2 if it is a thermocouple input channel.
7. Follow one of these steps.
   a. If analog input calibration is needed, press the **ENT** key. The alpha display shows:

      ZERO VAL x

      (x = channel number)

      Go to step 8, the analog input calibration procedure.
   b. Press **CLR** to bypass the input calibration. The AD shows:

      OUTPUT CAL

      Go to step 9, the analog output calibration procedure.

NOTE: If you do not have a linear input channel, the 4800 goes into the output calibration mode. If this happens, go to step 9.

8. Follow these steps to perform the *analog input callibration:*

   a. At this point, the alpha display shows:

      ZERO VAL x

      The numeric display shows the zero value for the input channel variable.

   b. Refer to your chamber's Instrumentation Schematic. The schematic should show the zero and span voltage or current values compared to the units of the analog input device. (For example, 0-5V / 0-1000 TORR means that the range goes from 0V (zero point) to 5V (span point), representing 0 Torr to 1000 Torr.) Note that as a general rule, the following holds true:

      - Voltage inputs to the function board typically have a zero point at zero volts and a span point at 5 volts.
      - Current inputs to the function board typically have a zero point at 4 milli-amperes and a span point at 20 milliamperes.
      - If channel 2 of the main board has a solid state humidity sensor connected to it, channel 2 always has a zero point at zero volts and a span point at 1 volt.

   c. Connect a low voltage or current source to the input channel's terminals on the Function board (TB4) or on the main board (TB1):

      - Channel 2 (+) is at TB4-1 and (-) is at TB4-2.
      - Channel 3 (+) is at TB4-3 and (-) is at TB4-4.
      - The Channel 2 main board solid state sensor connections are at TB1-5 (+) and TB1-4 (-).

   d. Set the low voltage or current source to the zero point of the input channel. (See the Instrumentation Schematic.) For the humidity sensor input to the main board, use 0V.

   e. Press the **ENT** key to start the data input. For The alpha display shows:

      – BUSY –

      DO NOT change the setting while the alpha display shows BUSY. After about twenty seconds, the AD shows:

      SPAN VAL x

      The numeric display shows the span value for the input channel variable.

   f. Set the low voltage or current source to the span point of the input channel. (See the Instrumentation Schematic.) For the humidity sensor input to the main board, use 1V.

g. Press **ENT** to start the data input. The AD shows:

– BUSY –

DO NOT change the setting while the alpha display shows BUSY. After about twenty seconds, the AD shows one of the following:

ZERO VAL 3

OR

OUTPUT CAL

h. Perform one of these steps:

- If **ZERO VAL 3** is displayed, repeat step 8 to calibrate channel 3.
- If **OUTPUT CAL** is displayed, go to step 9.

9. This step starts the *output calibration procedure*. Output calibration calibrates up to four output channels. If your 4800 has a Multioption Board, channels 1 and 2 are available for calibration. Otherwise, only channels 3 and 4 are available. In addition, the 4800 only displays the analog output channels that were set up in the deep configuration sheet. The deep configuration for your 4800 is located on a sheet at the front of this manual or on an engineering drawing.

10. Follow one of these steps.

a. To exit the Setup mode, Press the **CLR** key twice. The AD displays **OLD VALUES** and then exits the Calibrate mode.

b. To continue with the calibration procedure, depress the **ENT** key. The alpha display shows:

OUT x ZERO

(x = the analog output channel being calibrated)

11. Check the equipment connections to the analog output terminals. The analog outputs can be deep configured for standard values or be changed for special values.

a. The standard values are listed below. Note that the values are different on any deep configuration SELECT entry marked with a (-) symbol.

(1) A temperature output has a standard range of -85 to +185 and displays a linear curve.

(2) Percent relative humidity or linear output signal has a standard range of 0 to 100%.

(3) An altitude output signal has a standard range of 0 to 1000 Torr.

(4) A low resolution mass flow output signal has a standard range of 0 to 10.0 units.

(5) A high resolution mass flow output signal has a standard range of 0 to 1.0 units.

b. The actual output voltages sensed at the outputs are listed below.

(1) Analog outputs 1 and 2 are restricted to a 0 to 5 volts output.

(2) Analog outputs 3 and 4 can either be a 0 to 5 volts output or a 0 to 20 milliamperes output.

12. Set up the metering device to test the outputs. The best metering device for each channel is the peripheral instrument being driven by the output. Simply set up the instrument to read the output and then adjust the output until the 4800 numeric display and the peripheral instrument indicate the same reading.

    a. If necessary, adjust the voltage (or current) using one of the following keys:

        - The - key decreases the output by 0.001 volts (0.004 milliampere).
        - The ./: key increases the output by 0.001 volts (0.004 milliampere).
        - The 9 key decreases the output by 0.012 volts (0.048 milliampere).
        - The 7 key increases the output by 0.012 volts (0.048 milliampere).

    b. Once the voltage (or current) is correct, press **ENT**. The alpha display shows:

        OUT x SPAN

13. Repeat steps 11 and 12 to adjust the Zero and Span settings for the remaining outputs. Once all of the outputs have been calibrated, the alpha display shows:

        OK TO SAVE

14. Perform one of the following steps.

    a. Press **CLR** to use the old values. The AD displays **OLD VALUES** and exits the Calibrate mode.

    b. Press **ENT** To save the new calibration data. The 4800 burns (loads) the data into memory and checks for a proper burn. The AD shows:

        SAVING.

NOTE: *If at any time, the ZERO value is equal to or very close to the SPAN value, the 4800 ignores the calibration session and restores the old values. Also if the SPAN value is less than the zero value, the 4800 ignores the calibration session and restores the old values.*

NOTE: *If alpha display shows "-OPEN T/C-" or "-OPEN AIN-", check the input connections. If you have not removed the voltage source, remove the voltage source and connect the inputs.*

15. If the burn is bad, the alpha display shows:

        BAD BURN

    After two seconds, the AD shows:

        TRY AGAIN

    Depress the **ENT** to repeat the burn.

NOTE: *If the alpha display shows "BAD BURN" more than twice, contact your local Thermotron Field Service Office..*

APPENDIX A
STOP CODE LISTING

The stop codes identify why the 4800 is in the **STOP** mode. To display the stop code press the **STOP** key. For two seconds the alpha display shows:

STOP CODE

The numeric display shows a number. The stop code numbers are defined below.

Stop Code	Definition
*0 -	Not in STOP or error.
1 -	**STOP** key (normal stop code).
2 -	RAM failure.
3 -	Open T/C on channel 1.
4 -	Open T/C on channel 2.
5 -	3.5 Limit.
6 -	Process alarm channel 1.
7 -	Process alarm channel 2.
8 -	Computer I/O command.
9 -	Test complete.
10 -	Process alarm channel 3.
11 -	External STOP input.
12 -	Open analog input channel 2.
13 -	Open analog input channel 3.
14 -	N/A (Call Thermotron if this error code appears).
15 -	System Monitor input.
16 -	Computer I/O Initialize command.
17 -	Loss of altitude XDCR reading.
18 -	Stop command from master (slave only).
19 -	Slave communication timeout.
98 -	Stack overflow.
*99 -	Watch dog.

* The stop codes 0 and 99 can be caused by externally generated EMI/RFI electrical noise.

APPENDIX B
HOW TO SET UP THE PRINTER INTERFACE ON THE MULTIOPTION BOARD

The Multioption board has an RS-232 serial printer interface. The serial interface allows the 4800 to send data to the printer for logging. The parameters of the interface are preset for the printer when it is supplied by Thermotron. The parameters are not changeable.

If your printer has selectable serial configurations, set up the configuration as follows:

- Use a DCE connector
- Data Transfer Rate is 2400 bits/second
- Word Length is 8 bits per character (ASCII character)
- Use two Stop Bits
- Select No Parity
- Use the RTS or DTR handshake line
- Handshake polarity is Active Low Busy (BUSY NOT)

The printer interface pin connections are listed below:

1 - Chassis Ground (GND)

2 - Transmit Data (TXD)- Not used

3 - Receive Data (RXD) - Data travels from the 4800 to the printer

4 - Request to Send (RTS) - Indicates to the 4800 when the printer is ready to receive data

5 - Clear to Send (CTS) - Always active, indicates that 4800 is present and ready to receive

6 - Data Set Ready (DSR) - Always active, indicates that the 4800 is present

7 - Signal Ground (SG)

8 thru 19 - Not used

20 - Data Terminal Ready (DTR) - Indicates that the printer is busy or idle.

21 thru 25 - Not used

Information from the 4800 is sent to the printer during print intervals, during a change in the alarm status conditions, or an external input to 4800 Function Board (TB1-5). Print interval times are are in seconds. The print interval range is 0 to 1,000 seconds or 16 minutes and 40 seconds. When the print interval has been changed through the editing function (see table 4-1 on page 4-11), the data is printed immediately. From this point on, the data is printed at the selected print interval time. A print interval of 0 completely stops the data print function. When either channel goes beyond its alarm settings or comes back into its setting, the printer prints to indicate a change in the alarm status.

The print data format is listed below:

Column	1	2	3	4	5	6	7	8	9	10	11	12	13	14	15	16	17	18	19	20
Line 1	M	M	/	D	D		H	H	:	M	M		R	P		0	2	1		T
Line 2	C	H	1	:		-	0	5	0			-	0	2	5		A		C	
Line 3	C	H	2	:			0	6	5				0	7	5		A		%	R H
Line 4	C	H	3	:		1	0	0	0				6	8	0		A		T	R R

The lines contain the following data:

Line 1	Column	1 thru 5	Date
		7 thru 11	Time
		13 thru 14	Status (Run, Stop, Hold, Program, Manual)
		16 thru 18	Interval #
		20	Trigger Source (Time, Alarm, eXternal trigger, computer Interface)
Lines 2-4	Column	1 thru 4	Channel #
		6 thru 9	Set point
		11 thru 14	Process Variable
		16	Alarm Status (A = in alarm)
		18 thru 20	Units of Measure

APPENDIX C
HOW TO USE AN EXTERNAL EEPROM FOR PROGRAM STORAGE.

The 4800 allows storage and retrieval of one temperature program on an external EEPROM chip. Refer to Figure C-1. A No. 2816 EEPROM chip installs into Zero Insertion Force (ZIF) socket U1 on the Function Board. When installed, the EEPROM chip can store a program from the 4800 program storage. As a program is stored, the 4800 prompts for an EEPROM ID number. The ID number (1-254) helps identify which EEPROM is installed on the 4800. Once the program is stored, the EEPROM can be removed and stored for future use.

If a chamber requires the stored program, simply install the programmed EEPROM onto the chamber's 4800 Function Board. The 4800 can then retrieve the program and transfer the data to program storage.

CAUTION: Always remove power from the 4800 before removing or installing the EEPROM chip.

HOW TO STORE A PROGRAM ON AN EEPROM

Follow this procedure to store a program:

1. Follow these steps to install a No. 2816 EEPROM.
   a. Remove power from the 4800.
   b. Make sure the cam screw is in the counterclockwise position. Refer to Figure C-1. Note that the cam screw only moves one-half turn in either direction.
   c. Install the EEPROM into socket U1. Make sure pin 1 of the EEPROM chip is in the lower left hand corner.
   d. Hold the EEPROM chip in place and turn the cam screw one-half turn clockwise. The chip is now in place.
   e. Apply power to the 4800.
2. Press **STOP** and then **PROG**. The alpha display (AD) shows:

   PROG NMBR

3. Key in 55 and press ENT. One of the following events occur.
   a. If the EEPROM is bad or installed incorrectly, the AD shows:

      BAD EEPROM

      (1) Check the connections between the Function Board and the Main Board.
      (2) Repeat steps 1 thru 3. If the AD displays **BAD EEPROM** again, replace the EEPROM. If it still does not work, call Thermotron Technical Support.

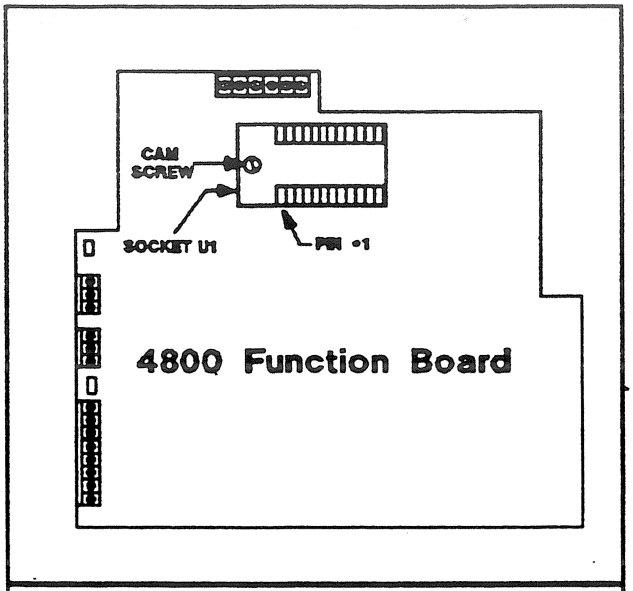

Figure C-1. ZIF Connector Location.

b. If the EEPROM already has a stored program, the AD shows:

OVERWRITE?

The numeric display shows the EEPROM ID number.

(1) If you do not want to overwrite the program, press **CLR** and go to step 6.

(2) If you want to overwrite the program press **ENT**. The AD displays:

PROG NMBR

Go to step 4.

c. If the EEPROM does not contain a program, the AD displays:

PROG NMBR

4. Key in the program number you wish to store and press **ENT**. The AD displays:

EEPROM NO?

5. Key in the number you wish to assign the EEPROM (1 to 254) and press **ENT**. The AD shows:

- - SAVING - -

The 4800 then goes into the Stop mode. The numeric display shows the remaining number of intervals in program memory.

NOTE: If the program is too large to fit in the EEPROM, the AD shows: **TOO BIG**. The 4800 then goes into the Stop mode.

6. Follow these steps to remove the EEPROM from the socket.
   a. Remove power from the 4800.
   b. Turn the cam screw one-half turn counterclockwise. Refer to Figure C-1. Note that the cam screw only moves one-half turn in either direction.
   c. Remove the EEPROM from socket U1. Store the EEPROM in the proper location.
   d. Apply power to the 4800.

HOW TO LOAD A PROGRAM FROM AN EEPROM INTO THE 4800

Follow this procedure to load a program into the 4800:

1. Follow these steps to install a No. 2816 EEPROM.
   a. Remove power from the 4800.
   b. Make sure the cam screw is in the counterclockwise position. Refer to Figure C-2. Note that the cam screw only moves one-half turn in either direction.
   c. Install the EEPROM into socket U1. Make sure pin 1 of the EEPROM chip is in the lower left hand corner.
   d. Hold the EEPROM chip in place and turn the cam screw one-half turn clockwise. The chip is now in place.
   e. Apply power to the 4800.
2. Press **STOP** and then **PROG**. The alpha display (AD) shows:

   PROG NMBR

3. Key in **88** and press **ENT**. One of the following events occur.
   a. If the EEPROM is empty or not properly connected, the AD shows:

      NO EEPROM

      (1) Check the connections between the Function Board and the Main Board.
      (2) Repeat steps 1 thru 3. If the AD displays **NO EEPROM** again, try another programmed EEPROM. If it still does not work, call Thermotron Technical Support.
   b. If a programmed EEPROM is properly installed. The AD shows:

      EEPROM NO

      The numeric display shows the EEPROM ID number assigned when the program was stored to the EEPROM.
4. Press the **ENT** key. the AD shows:

   PROG NMBR

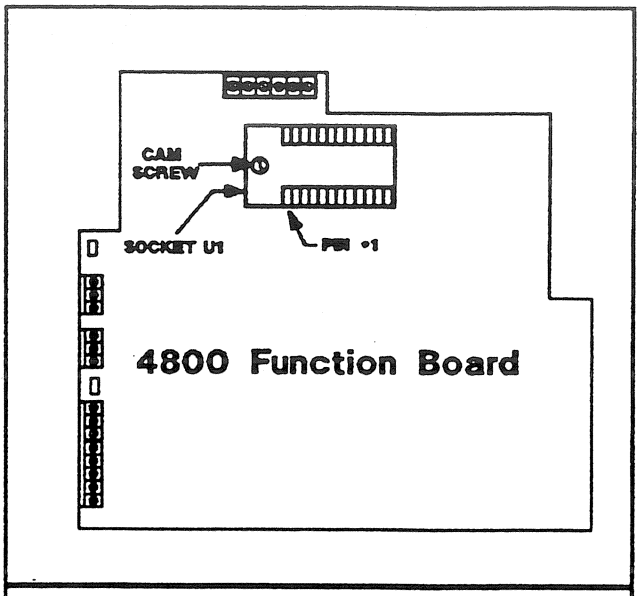

Figure C-2. ZIF Connector Location.

5. Key in the program number (1-10) the EEPROM program is to be stored under and press **ENT**. One of the following events occur:

   a. If the selected program number already has a stored program, the AD shows:

   OVERWRITE?

   (1) Press **CLR** to cancel the transfer. Go to step 2 to store the EEPROM program to another program number.

   (2) Press **ENT** to overwrite the program in 4800 program storage. The 4800 transfers the program data and goes into the Stop mode. The display shows the number of intervals left in program memory.

   b. If the 4800 does not have enough memory available, the AD shows:

   OUT OF MEM

   The 4800 aborts the program transfer and goes into the Stop mode. The display shows the number of intervals left in program memory.

6. Follow these steps to remove the EEPROM from the socket.

   a. Remove power from the 4800.

   b. Turn the cam screw one-half turn counterclockwise. Refer to Figure C-2. Note that the cam screw only moves one-half turn in either direction.

   c. Remove the EEPROM from socket U1. Store the EEPROM in the proper location.

   d. Apply power to the 4800.

APPENDIX D
PREPROGRAMMED IEC AND MIL STD TEST PROFILES

Thermotron Model 2800 and 4800 Programmer/Controllers contain seven standard test profiles in Read-Only Memory (ROM). These tests can be used on temperature/humidity test chambers. This appendix describes how to use the test profiles, and provides a profile listing and graph for each test profile.

HOW TO USE THE ROM TEST PROFILES

The ROM test profiles are available for testing or as masters to create new profiles. You can run each test directly from ROM to test your products. In addition, you can copy them to the normal test profile storage in RAM. The copied program in RAM can be edited and/or run as a normal test program. The following procedures describe how to run or copy the ROM test profiles.

HOW TO RUN A ROM TEST PROFILE

The following procedure describes how to run a ROM test profile:

1. Press STOP, RUN, and PROG in sequence. The Alpha Display shows:

   PROG NMBR

2. Use the keypad to type in the desired ROM test profile number (101 thru 107), and press **ENT**. (See ROM Test Profile Listing on page C-3 for a list of the ROM test profiles.) The Alpha Display shows:

   INTV NMBR

   NOTE: If the ROM test profile does not exist, the Alpha Display shows NO PROGRAM and the Programmer/Controller exits to to the STOP mode.

3. Type in the desired starting interval number, and press **ENT**. The program starts running.

   NOTE: If the interval does not exist in the ROM test profile, the Alpha Display shows NO INTERVL and the Programmer/Controller exits to to the STOP mode.

4. Once the program is running, you may edit the current interval. These changes only last during execution of the current interval. Once the interval is completed, the temporary edits are lost.

HOW TO COPY A ROM TEST PROFILE TO RAM PROGRAM MEMORY

If you wish to modify a ROM test profile, you must copy the profile to program memory in RAM. The copied program may then be examined and edited as desired. The original ROM test profile is not affected.

Follow this procedure to copy an ROM test profile to program memory:

1. Press the **STOP** key and then the **PROG** key. The Alpha Display shows:

   PROG NMBR

2. Type in the ROM test profile number (101 thru 107) you wish to copy to RAM program storage, and press **ENT**. (See ROM Test Profile Listing on page C-3 for a list of the ROM test profiles.) The Alpha Display shows:

   DESTINATION

3. Type in the RAM program number (1 thru 10) to which you wish to copy the ROM test profile, and then press **ENT**. One of the following events occurs:

   a. If the program number is not used, and enough intervals are available, the Programmer/Controller copies the ROM test profile to RAM program storage. During the copy process, the Alpha displays shows:

      COPYING

   b. If the program number is used, the Alpha Display shows:

      OVERWRITE?

      (1) Press **ENT** to overwrite the original program. If their are enough intervals available in memory, the ROM test profile is copied as described in step a.

      (2) Press **CLR** to cancel the copy operation. The Programmer/Controller exits to the STOP mode.

   c. Once the copy process is initiated as in step a or b, the Programmer/Controller checks to see if there are enough intervals available in program storage. If there are not enough intervals, the Alpha Display shows:

      OUT OF MEM

      The Programmer/Controller then exits to the STOP mode. You must then delete enough programs from program memory to allow room for the ROM profile. See the programming section of this manual.

4. Once the profile is copied to RAM, the RAM profile can be edited, examined, and/or run as a normal test profile.

C.2 ROM TEST PROFILE LISTING

The following pages provide a test listing and graph for each ROM test profile. The test profiles are listed by test number below:

Test #	Description
101	IEC 68-2-30, Test Db, 40 degrees C (9 intervals)
102	IEC 68-2-30, Test Db, 55 degrees C (9 intervals)
103	IEC 68-2-38, Test Z/AD (21 intervals)
104	MIL-STD 202F, Method 106E (21 Intervals)
105	MIL-STD 810E, Method 507.3, Procedure 1, Cycle 1 (19 Intervals)
106	MIL-STD 810E, Method 507.3, Procedure 1, Cycle 3 (22 Intervals)
107	MIL-STD 810E, Method 507.3, Procedure 3 (7 Intervals)

NOTE: The test profiles do not list any Continue Deviation values during their 00:00 time intervals. Only the first interval of each test profile has a Continue Deviation value greater than 0. The first interval of each profile is a guarenteed soak to make sure the test starts at the proper temperature and humidity levels.

TEST PROFILE LISTING KEY

Each test profile listing uses the following symbols:

INT #	Interval Number
IVAL	Initial Values – always first in the Interval column to provide the initial temperature/humidity values
FV1	Final Value for Channel 1 – always in Degrees Celsius
FV2	Final Value for Channel 2 – always in Percent of Relative Humidity
HH : MM	Interval Time in Hours and Minutes
NEXT INT	Next Interval to be executed
# LOOPS	Number of Loops

Test #101
IEC 68-2-30, Test Db

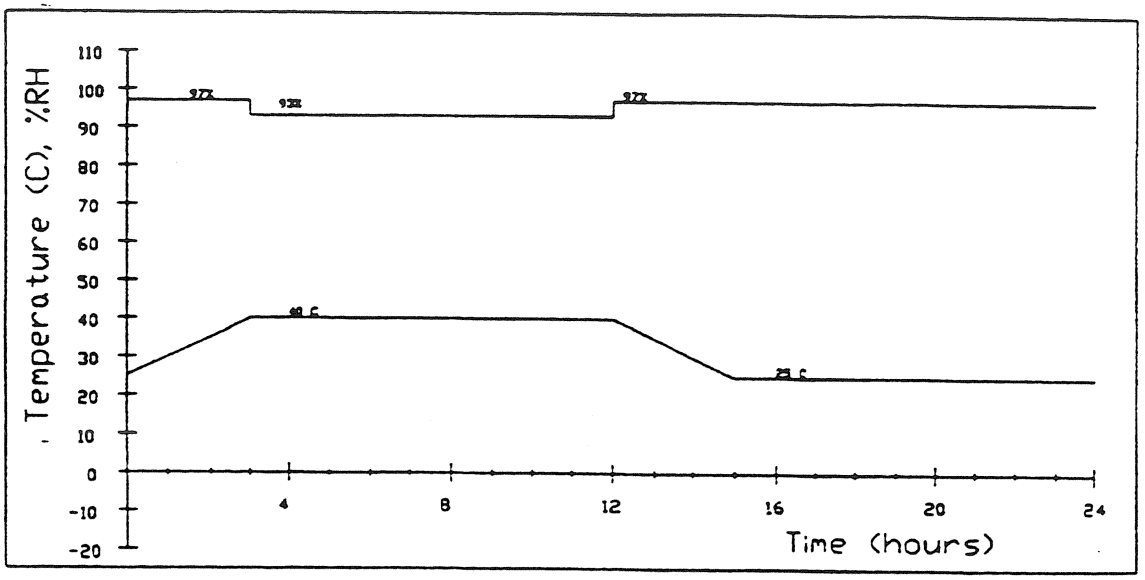

INT #	FV1	FV2	HH : MM	NEXT INT	# LOOPS
IVAL	25	97			
1	25	97	00 : 00	2	0
2	40	97	03 : 00	3	0
3	40	93	00 : 00	4	0
4	40	93	09 : 00	5	0
5	40	97	00 : 00	6	0
6	25	97	03 : 00	7	0
7	25	97	09 : 00	2	6
8	25	75	00 : 30	9	0
9	25	75	01 : 00	10	0

Test #102
IEC 68-2-30, Test Db

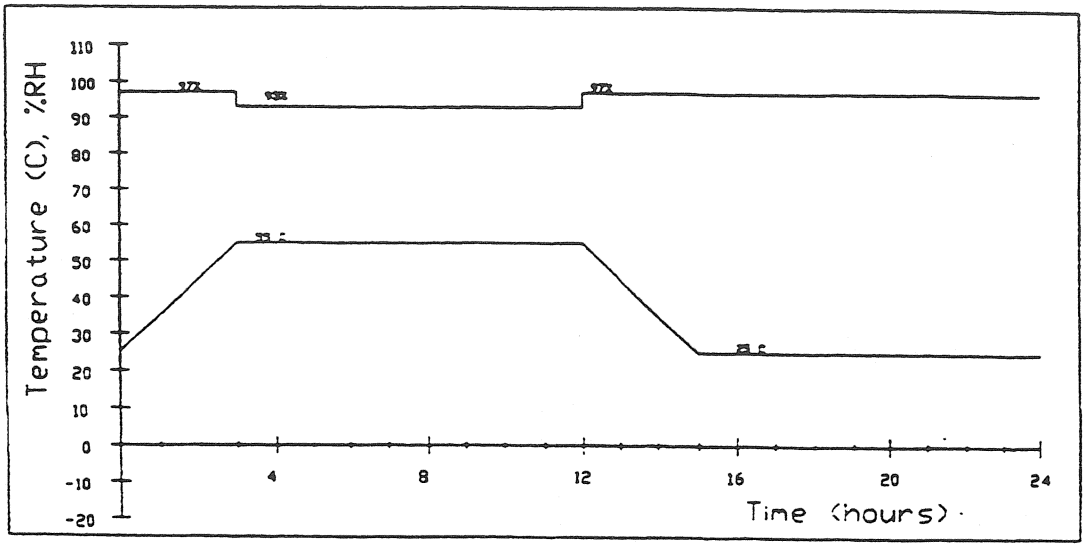

INT #	FV1	FV2	HH : MM	NEXT INT	# LOOPS
IVAL	25	97			
1	25	97	00 : 00	2	0
2	55	97	03 : 00	3	0
3	55	93	00 : 00	4	0
4	55	93	09 : 00	5	0
5	55	97	00 : 00	6	0
6	25	97	03 : 00	7	0
7	25	97	09 : 00	2	6
8	25	75	00 : 30	9	0
9	25	75	01 : 00	10	0

Test #103
IEC 68-2-38, Test Z/AD

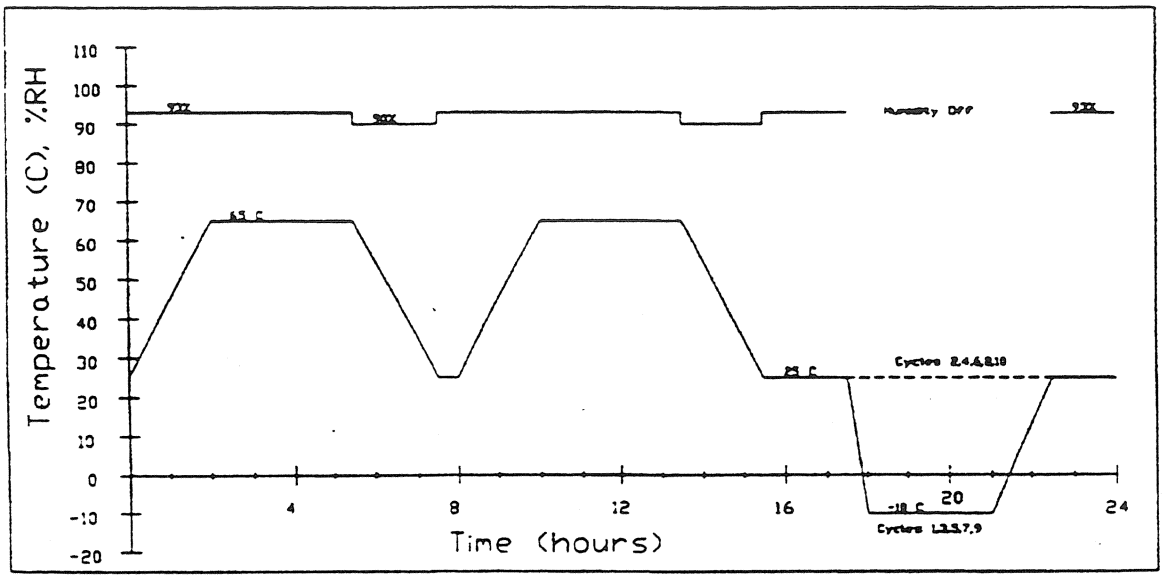

INT #	FV1	FV2	HH : MM	NEXT INT	# LOOPS
IVAL	25	93			
1	25	93	00 : 00	2	0
2	65	93	02 : 00	3	0
3	65	93	03 : 30	4	0
4	65	90	00 : 00	5	0
5	25	90	02 : 00	6	0
6	25	93	00 : 00	7	0
7	25	93	00 : 30	2	2
8	25	93	01 : 30	9	0
9	25	0	00 : 00	10	0
10	-10	0	00 : 30	11	0
11	-10	0	03 : 00	12	0
12	25	0	01 : 30	13	0
13	25	93	00 : 00	14	0
14	25	93	01 : 30	15	0
15	65	93	02 : 00	16	0
16	65	93	03 : 30	17	0
17	65	90	00 : 00	18	0
18	25	90	02 : 00	19	0
19	25	93	00 : 00	20	0
20	25	93	00 : 30	15	2
21	25	93	08 : 00	2	5

Test #104
Mil Std 202F, Method 106E

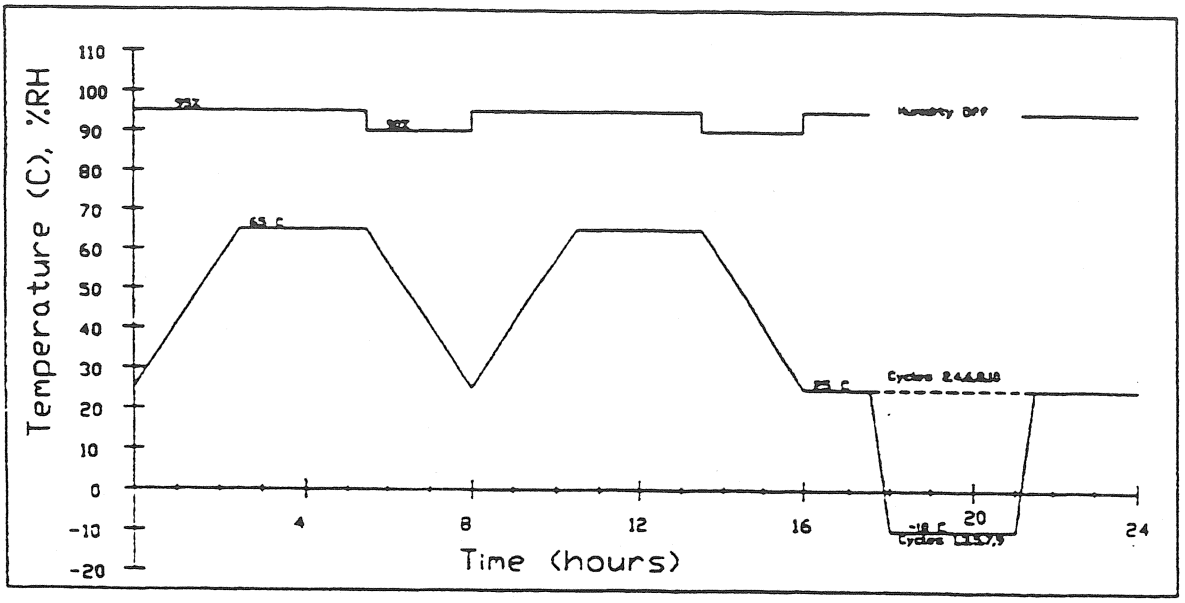

INT #	FV1	FV2	HH : MM	NEXT INT	# LOOPS
IVAL	25	95			
1	25	95	00 : 00	2	0
2	25	95	01 : 00	3	0
3	65	95	02 : 30	4	0
4	65	95	03 : 00	5	0
5	65	90	00 : 00	6	0
6	25	90	02 : 30	7	0
7	25	95	00 : 00	3	2
8	25	95	01 : 30	9	0
9	25	0	00 : 00	10	0
10	-10		0	00 : 30	11
11	-10		0	03 : 00	12
12	0	0	00 : 12	13	0
13	0	95	00 : 00	14	0
14	25	95	00 : 18	15	0
15	25	95	02 : 30	16	0
16	65	95	02 : 30	17	0
17	65	95	03 : 00	18	0
18	65	90	00 : 00	19	0
19	25	90	02 : 30	20	0
20	25	95	00 : 00	16	2
21	25	95	08 : 00	3	5

Test #105

Mil Std 810E, Method 507.3, Procedure 1, Cycle 1

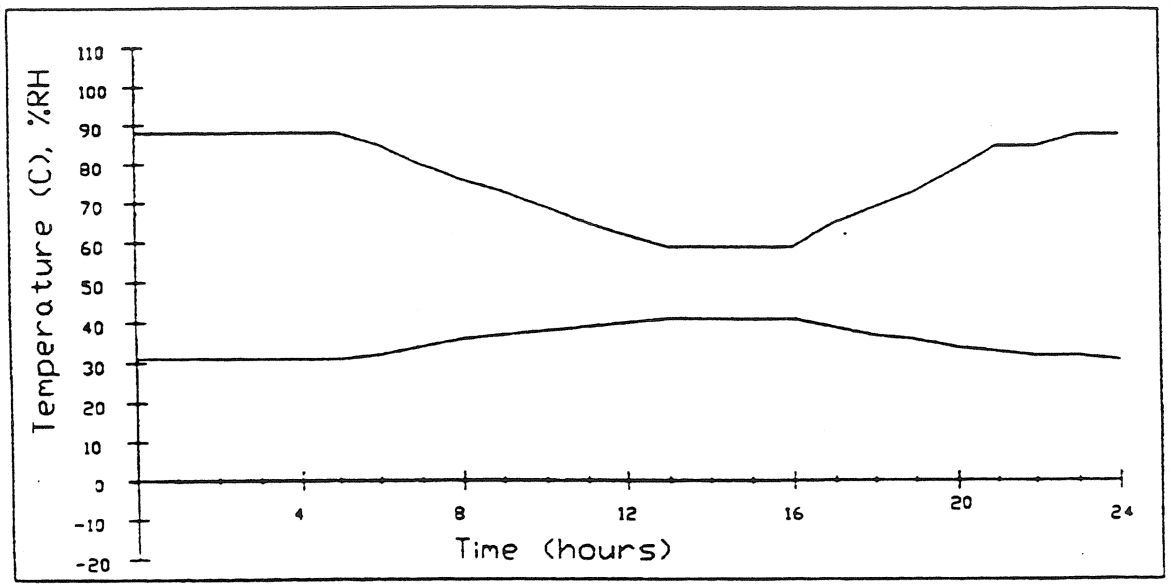

INT #	FV1	FV2	HH : MM	NEXT INT	# LOOPS
IVAL	31	88			
1	31	88	00 : 00	2	0
2	31	88	05 : 00	3	0
3	32	85	01 : 00	4	0
4	34	80	01 : 00	5	0
5	36	76	01 : 00	6	0
6	37	73	01 : 00	7	0
7	38	69	01 : 00	8	0
8	39	65	01 : 00	9	0
9	40	62	01 : 00	10	0
10	41	59	01 : 00	11	0
11	41	59	03 : 00	12	0
12	39	65	01 : 00	13	0
13	37	69	01 : 00	14	0
14	36	73	01 : 00	15	0
15	34	79	01 : 00	16	0
16	33	85	01 : 00	17	0
17	32	85	01 : 00	18	0
18	32	88	01 : 00	19	0
19	31	88	01 : 00	2	10

Test #106

Mil Std 810E, Method 507.3, Procedure 1, Cycle 3

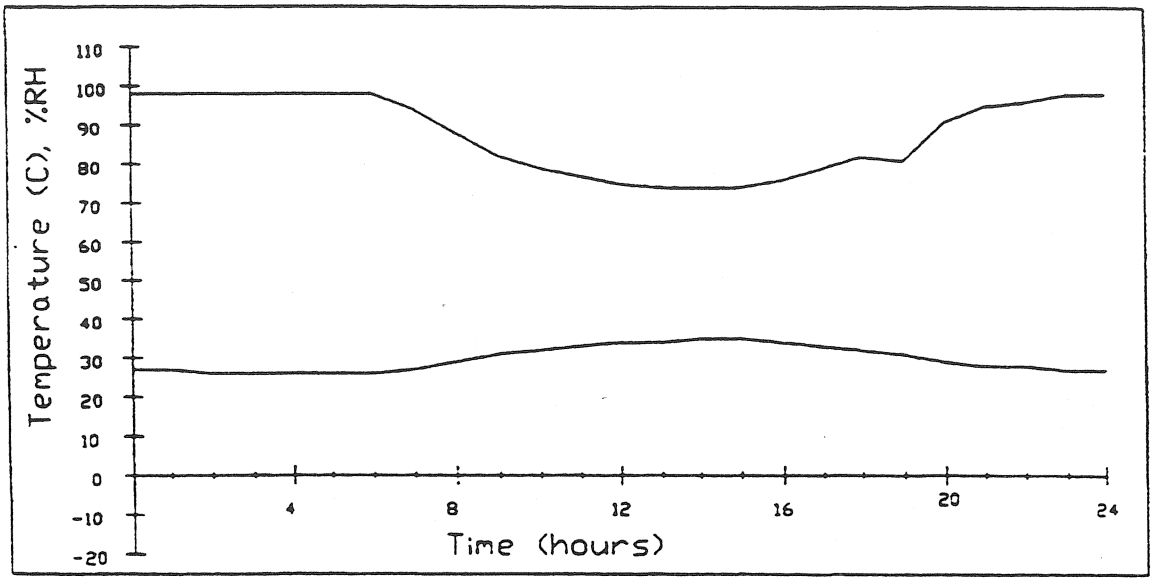

INT #	FV1	FV2	HH : MM	NEXT INT	# LOOPS
IVAL	27	98			
1	27	98	00 : 00	2	0
2	27	98	01 : 00	3	0
3	26	98	01 : 00	4	0
4	26	98	04 : 00	5	0
5	27	94	01 : 00	6	0
6	29	88	01 : 00	7	0
7	31	82	01 : 00	8	0
8	32	79	01 : 00	9	0
9	33	77	01 : 00	10	0
10	34	75	01 : 00	11	0
11	34	74	01 : 00	12	0
12	35	74	01 : 00	13	0
13	35	74	01 : 00	14	0
14	34	76	01 : 00	15	0
15	33	79	01 : 00	16	0
16	32	82	01 : 00	17	0
17	31	81	01 : 00	18	0
18	29	91	01 : 00	19	0
19	28	95	01 : 00	20	0
20	28	96	01 : 00	21	0
21	27	98	01 : 00	22	0
22	27	98	01 : 00	2	45

Test #107

Mil Std 810E, Method 507.3, Procedure 3

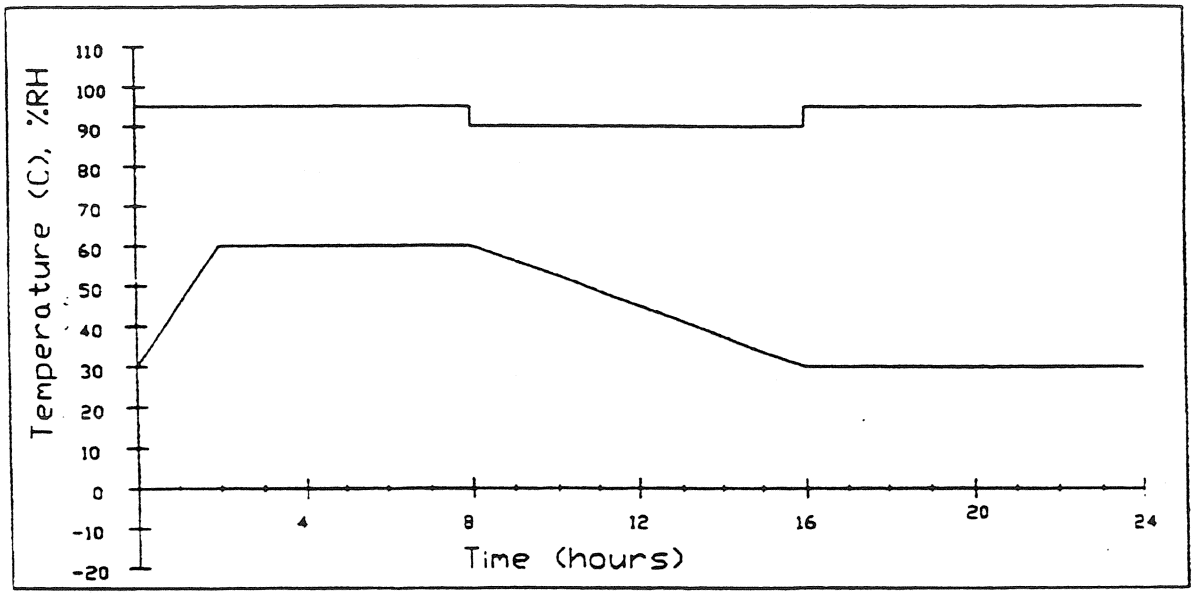

INT #	FV1	FV2	HH : MM	NEXT INT	# LOOPS
IVAL	30	95			
1	30	95	00 : 00	2	0
2	60	95	02 : 00	3	0
3	60	95	06 : 00	4	0
4	60	90	00 : 00	5	0
5	30	90	08 : 00	6	0
6	30	95	00 : 00	7	0
7	30	95	08 : 00	2	10

APPENDIX E
LOCKING THE KEYBOARD

Follow this procedure to lock or unlock the keyboard:

1. To lock out all functional operations, press the following keys in sequence:

   LOCK

   Hidden X

   Hidden Y

   LOCK

   See Figure6-4. This places the 4800 in the LOCK mode. You can still use keys to display system variables, but you are locked out from performing any functions. Use the same key sequence to unlock a locked keyboard.

2. To lock-out the program operations, press the following keys in sequence:

   LOCK

   Hidden X

   Hidden Y

   PROG

   LOCK

See Figure 6-4. This places the 4800 in the PROGRAM LOCK mode. You can not affect programmed operations from the keyboard. Use the same key sequence to unlock a locked keyboard.

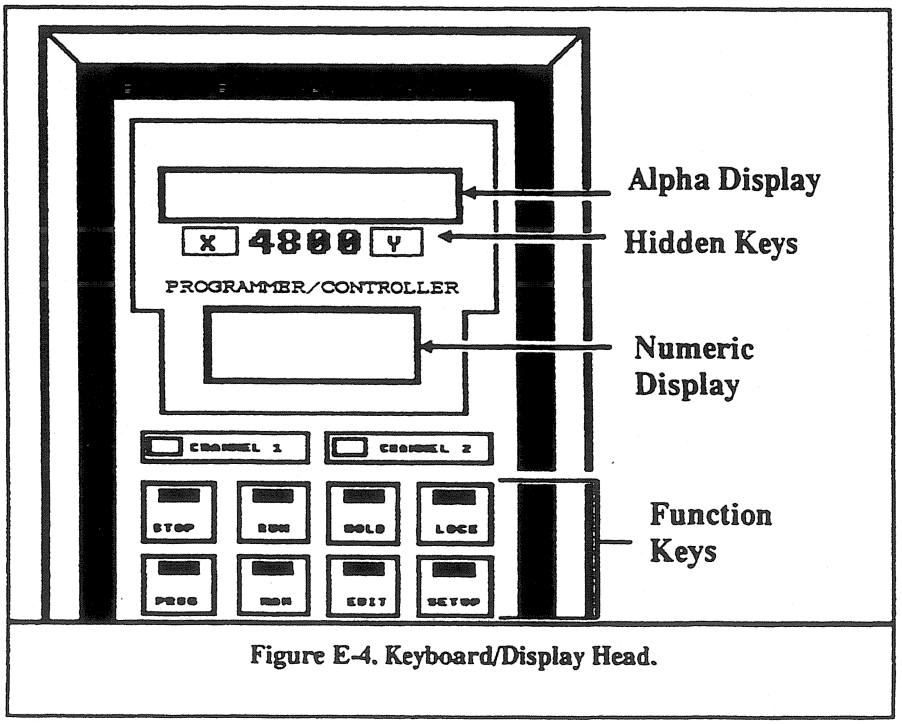

Figure E-4. Keyboard/Display Head.

GLOSSARY OF TERMS

The following is an alphabetical listing of terms and abbreviations.

AC: Alternating Current

Alarm Band: The maximum area around the current set point that the process variable (actual test space or product condition) can deviate from.

Ambient Temperature: Room temperature - approximately +25°C (+77°F).

Auxiliary Relay: A Programmer/Controller relay programmed on or off from the Temperature Profile screen. When the relay is programmed on, the operation controlled by the relay is activated.

Backplane: An electronic interface access to the interior of the chamber's Test Space.

Bypass Mode: A state in which the refrigeration compressors are running but some or all of the refrigerant does not pass thru the evaporator.

Cascade: A combination of two refrigeration systems (usually an R-502 and an R-13 system) used to achieve very low temperatures. The evaporator of the R-502 system serves as the condenser of the R-13 system.

Chamber: A general name for a Thermotron environmental testing system. The chamber includes the testing section, the machinery section, and the console section. On air cooled chambers, air cooled condensers are also part of the chamber.

Console: Chamber control and operation is provided from the Console. The Console contains the Control Panel and the chamber's instrumentation.

Continue Deviation: The difference the process variable can be from Final Value before transitioning to the next interval. Continue Deviation is used during intervals with 00 :00 time programmed. The chamber will throttle at the maximum rate toward the Final Value. When the process variable comes within the programmed difference, the chamber's Programmer/Controller transitions to the next interval.

CO_2: Carbon Dioxide.

Control Sensor: A device (or a group of devices) which monitors the environmental conditions in the chamber's test space for the Programmer/Controller.

Cooling Ramp: The process of decreasing the test space temperature from an initial set point to a lower temperature set point ata linear rate.

Cycle: A set of Programmer/Controller intervals repeated during a programmed test.

DC: Direct Current

Deviation: The difference between the Process Variable (actual test space or product condition) and the set point (assigned test space or product condition).

Droop: An effect that prevents a process variable from meeting its final set point. For example, natural heat loss thru the test space walls can prevent the temperature from reaching the final set point.

Early Life Failure: A defeet in a product which causes the product to fail during its infancy.

Event Relay: A relay programmed by a computer. When the relay is programmed on, the operation controlled by the relay is activated.

Gain: The electronic level the process variable's signal is amplified. When the chamber ramps to a final set point, the process variable (actual chamber condition) is amplified by the gain level setting. During the ramp, the signal will saturate past the gain setting. When the signal is saturated, the chamber runs at 100% throttle to maintain the programmed ramp speed. When the signal goes below the saturation point, the controller reduces the throttle. The throttle is reduced in proportion to the percentage the amplified signal drops below the saturation point.

Gain is the inverse of proportional band - the larger the gain, the smaller the proportional band. Gain can be seen as the level the process variable must reach before entering the proportional band. Once the Gain level is reached, the 6850 begins to proportion the throttle.

GN_2: Gaseous Nitrogen

GPIB: General Purpose Interface Bus. A GPIB is a parallel interface bus built under the IEEE-488 standard. This is the standard bus used for communication between the Host Computer and the ESS System.

Guaranteed Soak (Or Step Change): A process which ensures the test space or product will reach the initial value of the next interval before the chamber finishes the current interval. In order to enable guaranteed soak, the chamber's Programmer/Controller must be set for a zero time interval and a deviation greater than zero. With these settings, the chamber will run at 100% throttle all the way to final set point minus the deviation before proceeding to the next interval. Note that an interval with a duration greater than zero must follow.

Handshaking: The communication signals used to control the data transmission interface between two or more devices.

Heating Ramp: The process of increasing the test space temperature from an initial set point to a higher temperature set point at a linear rate.

HEXFET: Field Effect Transistor used to switch power loads.

IC: Integrated Circuit

I/O: Input/Output

Integral: A process of compensating for Droop. The integral effectively shifts the final set point up or down by adjusting the heating or cooling system's output to raise or lower the process variable to set point.

Interval: A programmed period of time in which the chamber operates under a specified set of conditions.

kW: Kilowatt

LED: Light Emitting Diode

LN_2: Liquid Nitrogen

Loop: A series of Programmer/Controller intervals programmed to be repeated.

mA: Milliamperes

Machinery Section: The section of a chamber containing the condensing unit and other machinery.

Micron: A unit of pressure normally used in high altitude or vacuum applications. One thousand microns equal one torr.

MICROSECS or us: Microseconds

MILLISECS or ms: Milliseconds

Millitorr: Same as Micron

NC: Normally Closed

NO: Normally Open

Offset: The amount the test space air may exceed the final temperature set point during Product Temperature Control operations.

Ohms: A unit of resistance

Overshoot: A temperature test condition where the process variable runs past final set point.

PCB: Printed Circuit Board

Plenum: The contained area inside the test space in which the air is circulated thru the environmental conditioning systems for the environmental test. The plenum usually contains the heaters, evaporator coils and the circulator blades.

PSIG: Pounds Per Square Inch Gauge

Polarity: The direction of a voltage level (positive or negative).

Port: A hole in the Testing section designed to allow access to the test space.

Product: The device or equipment the chamber tests.

Product Temperature Control: A heating and cooling process which controls the process variable from the product temperature rather than the chamber air temperature.

Profile: A parameter entry program used to create Programmer/Controller tests.

Process Variable: The actual sensed condition(s) within the test space which are controlled by the Programmer/Controller.

Proportional Band: The range around the set point in which the Programmer/Controller adjusts the throttle, providing a smooth ramp into set point.

Pulldown: A transition from a higher temperature to a lower temperature.

%RH: Percentage of relative humidity within the test space.

RS-232: A standard serial data interface between two or more electronic devices.

RS-485: A standard serial data interface between two or more electronic devices with addressing capabilities.

RTD: Resistance Temperature Device. A device used to sense temperature as a function of resistance.

SCFM: Standard Cubic Feet per Minute. A unit of gaseous flow rate.

Serial Tag: A label attached to the chamber which lists the chamber specifications, serial number and model number.

Set point: An assigned value for a test space condition. There are three types set points:

1. **Initial set point:** The value that the chamber is at in the beginning of an interval.
2. **Final set point:** The final value the chamber is to reach within an interval.
3. **Current set point:** The intermediate set points the Programmer/Controller sets when ramping from the initial set point to the final set point.

Step Change (Or Guaranteed Soak): A process which ensures the test space or product will reach the initial value of the next interval before the chamber finishes the current interval. In order to enable guaranteed soak, the chamber's Programmer/Controller must be set for a zero time interval and a deviation greater than zero. With these settings, the chamber will run at 100% throttle all the way to final set point minus the deviation before proceeding to the next interval. Note that an interval with a duration greater than zero must follow.

T/C: Thermocouple

Test Compartment: The section of the chamber enclosing the Test Space and Plenum.

Test Space: The space within the Test Compartment where the product is tested.

Thermocouple: A device used to sense temperature as a function of current.

Throttle: The percentage of output applied by a chamber's conditioning system to reach set point.

Torr: A unit of pressure used in altitude and vacuum applications. 760 torr equals the pressure at sea level.

Transition: The crossing point at which a value changes from one condition to another.

Universal Asynchronous Receiver/Transmitter (UART): Serial interface controller used to operate an RS-232 or RS-485 Serial Interface. The UART operates using its own clock.

Keep your Thermotron equipment at top efficiency with our preventive maintenance program.

Our environmental simulation equipment and systems are designed to provide many years of dependable service. But for maximum efficiency at all times, each system must be properly maintained and serviced.

Our field service engineers are always on hand to provide emergency service, but with a Preventive Maintenance Agreement, it will seldom be necessary. You'll see:

- Improved operation with the system properly adjusted and calibrated (NBS traceability can be provided).
- Reduced operating costs due to fewer "crisis" situations.
- Increased efficiency with maintenance performed according to your schedule.
- More accurate operating budgets: You'll know your yearly maintenance cost in advance.
- Improved use of funds with less of your money invested in spare parts inventory.
- Simplified administrative procedures — one purchase order keeps the agreement in force for a full year.

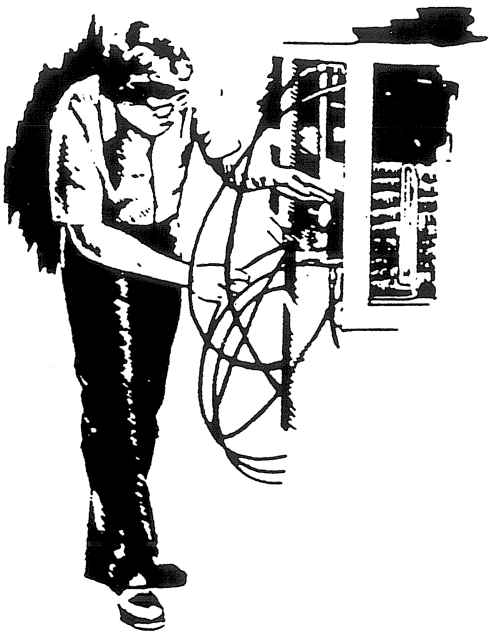

For further information about our Preventive Maintenance Agreement and how it can benefit the operation of your plant, call us — (616) 392-1491

THERMOTRON

A Venturedyne, Ltd. Company

2800/4800 Programmer/Controller Troubleshooting Guide

Component Descriptions/Troubleshooting/Diagnostics/Component Replacement

Revised October, 1993

For additional manuals, contact Thermotron Industries as follows:

Thermotron Industries
291 Kollen Park Drive
Holland, MI 49423, U.S.A.

Phone: (616) 392-1491 FAX: (616) 393-4549

Printed in U.S.A.

Table of Contents

Section		Description	Page
1.		**INTRODUCTION**	1
	1.1	How To Use This Manual	1
2.		**FUNCTIONAL DESCRIPTION**	2
	2.1	MAIN BOARD	3
		2.1.1 How to Identify	3
		2.1.2 Functional Description	3
		2.1.3 Identified Components	3
	2.2	DISPLAY HEAD	7
		2.2.1 How To Identify	7
		2.2.2 Functional Description	7
	2.3	4800 FUNCTION BOARD	9
		2.3.1 How To Identify	9
		2.3.2 Functional Description	9
		2.3.3 Identified Components	9
	2.4	MULTI-OPTION BOARD	12
		2.4.1 How To Identify	12
		2.4.2 Functional Description	12
		2.4.3 Identified Components	12
	2.5	COMPUTER I/O OPTION BOARD (GPIB or RS-232)	14
		2.5.1 How to Identify	14
		2.5.2 Functional Description	14
		2.5.3 Identified Components	14
3.		**TROUBLESHOOTING PROCEDURES**	17
	3.1	GENERAL INFORMATION	17
	3.2	PRELIMINARY TROUBLESHOOTING STEPS	18
	3.3	2800/4800 TROUBLESHOOTING LOG SHEET	19
	3.4	2800/4800 MISCELLANEOUS SYMPTOMS	20
	3.5	2800/4800 TROUBLESHOOTING CHART	21
A.		**APPENDIX A - DIAGNOSTIC TESTS**	1
	A.1	MANUAL RESET	1
	A.2	RAM Test	1
	A.2	ROM TEST	2
	A.3	DISPLAY TEST	2
	A.4	KEY TEST	3
	A.5	SOFTWARE VERSION	3
	A.6	MANUAL THROTTLE	3

Table of Contents (Cont'd.)

Section	Description	Page
B.	**APPENDIX B - TEST POINTS**	1
3.1	GENERAL DESCRIPTION	1
C.	**APPENDIX C - TERMINAL BLOCK DEFINITIONS AND RELAY BOARD ASSIGNMENTS**	1
C.1	GENERAL DESCRIPTION	1
C.2	RELAY BOARD SSR ASSIGNMENTS	4
D.	**APPENDIX D - STOP CODES**	1
D.1	GENERAL DESCRIPTION	1
E.	**APPENDIX E - CONFIGURATION**	1
E.1	GENERAL DESCRIPTION	1
E.2	CONFIGURATION ENTRY	1
E.3	CONFIGURATION DATA	1
F.	**APPENDIX F - ELECTRICAL NOISE AND IMMUNIZATION PROCEDURES**	1
F.1	GENERAL DESCRIPTION	1
F.2	SOURCES OF EMI/RFI	1
F.3	NOISE IMMUNIZATION PROCEDURES	1
G.	**APPENDIX G 4800 COMMON COMPUTER I/O PROBLEMS AND QUESTIONS**	1
G.1	GENERAL DESCRIPTION	1
H.	**APPENDIX H - BOARD REPLACEMENT PROCEDURES**	1
H.1	GENERAL INSTRUCTIONS	1
H.2	MAIN BOARD	1
H.3	DISPLAY HEAD	2
H.4	4800 FUNCTION BOARD	2
H.5	MULTI- OPTION BOARD	2
H.6	COMPUTER INTERFACE BOARD (GPIB or RS-232)	2
I	**APPENDIX I - ASSEMBLY COMPUTER NUMBERS**	1

Table of Figures and Tables

List of Figures

Figure 1	Overall Layout Diagram	1-2
Figure 2	2800 Main Board	1-5
Figure 3	2800/4800 Main Board Version I	1-5
Figure 4	2800/4800 Main Board Version II	1-6
Figure 5	2800/4800 Front Panel	1-7
Figure 6	2800/4800 Display Head Version I & II	1-8
Figure 7	2800/4800 Display Head Version III	1-8
Figure 8	4800 Function Board	1-11
Figure 9	Multi-Option Board Version I	1-13
Figure 10	Multi-Option Board Version II	1-13
Figure 11	GPIB Option Board Version I A & B	1-15
Figure 12	RS-232 Option Board Version I A & B	1-15
Figure 13	GPIB Option Board Version II	1-16

List of Tables

SSR Designation Table	C-5
Stop Code Table	D-1

SAFETY INSTRUCTIONS

For the safe operation of this instrument, read and follow all warnings and cautions.

WARNING: If you do not follow the instructions in a **WARNING**, injury can occur to you or to other personnel

CAUTION: If you do not follow the instruction in a **CAUTION**, damage can occur to the equipment.

1. You must have training in the operation of this instrument before using it. Read the Operator's Manual.
2. Do not operate this instrument unless it is completely assembled.
3. Maintenance and repairs must be done by authorized personnel only. Make calibrations according to the specifications given in this manual.
4. Use a mild soap and water solution to clean the control panel of the instrument.
5. To prevent electrical shock, do not touch the transformer and terminal block TB5 on the Main Board.
6. To prevent damage to the instrument, do not connect AC power to the terminal blocks on the Main Board (except TB5) and Multi-Option Board.
7. Always use an electrical supply system with a separate electrical ground conductor. For maximum protection against electrical shock, use a circuit that is protected by a ground fault circuit interrupter.
8. This instrument is designed to use specific voltage, amperage and phasing. Under or over powering the instrument will cause premature failures and will void certain aspects of the warranty.
9. Alway remove power from the instrument before attempting to remove any circuit board or component.
10. Follow appropriate protection procedures to ensure that electrostatic charges do not cause damage to the circuit boards. Refer to Section III for more details on electrostatic protection procedures.

SPECIFICATIONS

OPERATING TEMPERATURE:	$0^{O}C$ to $50^{O}C$ ($32^{O}F$ to $122^{O}F$)
POWER REQUIREMENTS:	117 volts AC ±10%, 50/60 Hertz, 23.3 volts amperes.
CHANNELS:	One, two or three independently programmable channels (Three channels available on 4800 only.)
TEMPERATURE RANGE:	$-87^{O}C$ to $191^{O}C$ ($-125^{O}F$ to $375^{O}F$).
HUMIDITY RANGE:	20% to 100% relative humidity.
INPUT:	Type "T" thermocouple (copper/constantan).
SAMPLING RATE:	Process sampled every 0.1 sec. Control outputs updated every 1 second.
MEASURING ACCURACY:	±.25% of span typical.
TEMPERATURE SCALE:	Celsius or Fahrenheit.
DISPLAY RESOLUTION:	Temp. Selectable of 0.1^{O} or 1^{O} Celsius or Fahrenheit, 1% relative humidity.
CONTROL METHOD:	Direct digital control, heat only or heat/cool as required by chamber design.
PROPORTIONAL BAND:	Programmable 1 to 1000 units.
INTEGRAL TIME (Automatic Reset):	Programmable 1 to 1000 seconds or off (0).
OUTPUTS:	Time proportioning self-adjusting, analog 0-5 volts.
MACHINERY CYCLE TIME:	Software controlled.
AUXILIARY COOLING OUTPUT:	Programmable, 0 to 100% of 5 second time frame (channel 1 only).
ALARM OUTPUTS:	Programmable, one process and/or one deviation for each channel, ON/OFF TTL compatible. The alpha display flashes.
EVENTS OUTPUTS:	5 ON/OFF TTL compatible outputs (4800 only).
INTERVALS:	Up to 256 intervals may be stored in memory.
INTERVAL LENGTH:	1 minute to 24 hours. 1 minute resolution.
PROGRAMS:	Up to 10. Intervals can be divided between programs.
LOOPS:	Up to 16 loops per program. Each loop may be repeated 255 times. nesting allowed

PROGRAM MEMORY:	RAM. Dynamically allocated by program number up to maximum number of intervals. Lithium battery back-up to 7 years without power. Battery shelf life 10 years.
COLD JUNCTION COMPENSATION:	Temperature stability $\pm 0.025^{o}C/^{o}C$ ambient change.
OPEN THERMOCOUPLE PROTECTION:	Deactivates all outputs. The alpha display shows "OPEN T/C".
OPTIONAL ACCESSORIES:	Multi-Option Board -Real-time clock -Analog process variable retransmit -Printer output: RS-232 "talk only" port Computer Interface Board RS-232 , RS-485 or GPIB (IEEE-488, 1978 standard) Solid State Relay Board

1. INTRODUCTION

1.1 How To Use This Manual

This manual is a service guide for 2800 and 4800 Programmer/Controllers This manual is intended to be used with the Programmer/Controller Operator's Manual

The following section, Functional Description, describes the overall system and each card Section three describes troubleshooting symptoms and procedures. The Appendixes provide information on diagnostic tests, test points, terminal block definitions, relay board assignments, stop codes, configuration, electrical noise and immunization procedures, common computer I/O problems and questions, board replacement procedures and computer part numbers.

Always check the programming set-up on your instrument before beginning or carrying out any hardware repairs. Refer to the programming instructions in the Operator's Manual

2. FUNCTIONAL DESCRIPTION

The 2800 and 4800 Programmer/Controller systems are similar but have subtle differences. This manual describes the similarities and differences, functions, troubleshooting symptoms, and card replacement procedures. Each system consist sof several printed circuit boards (PCB). These PCBs are identified below.

Most 2800/4800 Main Boards are mounted on an aluminum mounting plate. This plate attaches to the instrument housing on the chamber console. The Function Board (4800 only), Multi-Option Board, and Computer I/O Option Board mount piggy-back style on the Main Board. Remote mounting of the Display Head provides easier user access. Remote mounting of the Relay Board(s) provide easier connection to the 115 Volt AC control circuitry. Refer to Figure 1 for the Overall Layout Diagram.

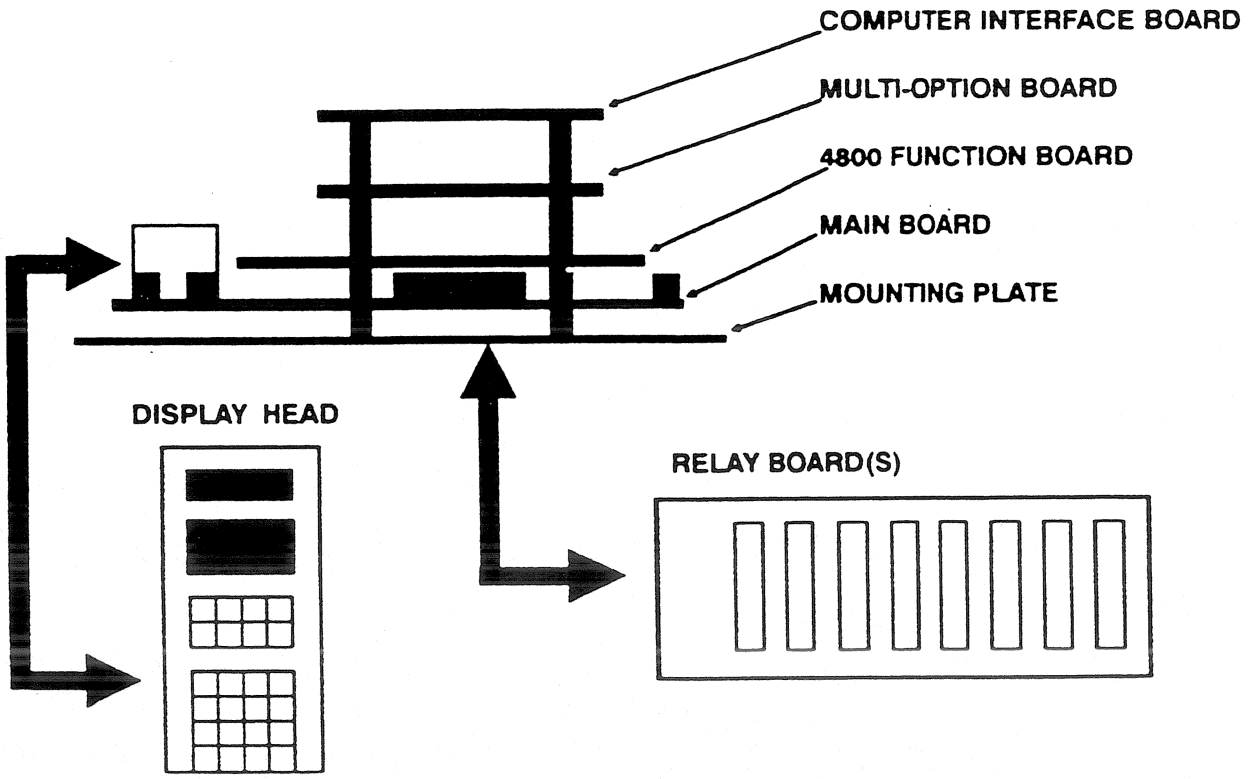

Figure 1 Overall Layout Diagram

2.1 MAIN BOARD

2.1.1 How to Identify

There are three versions of the Main Board. Throughout this manual, they are referred to as the 2800 Main Board, 2800/4800 Main Board Version I, and 2800/4800 Version II. Refer to Figure 2a, 2b and 2c as you read thru the descriptions of these board.

All three versions have two common features. The first feature is a long terminal block (TB2) located along one edge of the PCB assembly. On the 2800 version, TB2 contains 16 terminals. On the 2800/4800 Versions I and II, TB2 contains 18 terminals. The second feature is a transformer (T1) in the lower right hand corner of the board. In both systems, the Main Board is mounted on an aluminum mounting plate (refer to Figure 1). This mounting plate prevents the boards from flexing and provides the means to mount the Programmer/Controller on the chamber. The Main Board can be either a one or two channel version. To identify if the Main Board is a two channel version, look for the Input Amplifier U9. If U9 is present on the board, it is a two-channel version.

2.1.2 Functional Description

The Main Board provides six major functions. The following paragraphs describe these functions.

- Power Supply Function.
- The Main Board provides the required voltages to the other boards within the system.
- Micro-computer Function.

The Main Board contains the brains of the system. The micro-processor executes PROM, EEPROM and RAM data. The PROM stores the firmware program. The EEPROM stores the configuration data. The RAM stores the user's program data.

Thermocouple Input Function	The Main Board provides signal conditioning, ambient junction compensation and analog-to-digital conversions. These items are required to read the temperature at the measuring junction of the thermocouple(s).
Control Output Function (2800 only)	The Main Board provides the signals required to energize the controlling elements of the chamber. These signals provide the heat/humidity pulses needed to achieve and maintain the identified set point. These signals are also applied to the Display Head Channel 1 and Channel 2 LEDs.
Auxiliary and Miscellaneous Input/Output Functions	The Main Board provides signals that energize the Auxiliary, System Enable, Machinery Enable and Alarm relays.
Display Head Interface Function	The Main Board provides signals required to send and receive information to and from the Display Head.

2.1.3 Identified Components

NOTE: Items in Parentheses() are found on the 2800/4800 Version II Main Board only.

TP 1-11	These test points (TP) are on all versions of the Main Board. Refer to Appendix B for the test point descriptions.
TP 12-20	These test points are on the Main Board Version II only. Refer to Appendix B for the test point descriptions.

U9	This is the Input Amplifier for channel two. This component is only on two channel units.
TB 1	This terminal block connects the thermocouple(s) to the Main Board. The Ambient Junction Compensator is located inside this terminal block. Refer to Appendix C for the individual terminal descriptions.
TB 2	This terminal block connects the Main Board control signals to the chamber system. Refer to Appendix C for the individual terminal descriptions.
TB 3	This terminal block connects the channel 1 heat pulse signal to the Relay Board. Refer to Appendix C for the individual terminal descriptions.
TB 4	This terminal block connects the channel 2 heat pulse signal to the Relay Board. Refer to Appendix C for the individual terminal descriptions.
TB 5	This terminal block connects the 115 VAC to the Main Board.
J1	This DB-25 Connector connects the Display Head to the Main Board.
J2	This connector connects the Computer I/O Option Board to the Main Board.
J3	This connector is on the 2800/4800 Version Main Board only. It connects the Main Board to the Chamber system.
J4	This connector connects unregulated power from the Main Board to the 4800 Function Board. It is in 4800 systems only.
B1	This is the memory back-up power battery.
T1	This is the step-down transformer, which steps the incoming 115 VAC down to working voltages.
W3,(W1)	This jumper selects the interlock control output mode. In the LOCK or 2nd position, channel 1's time proportioning output (heat) takes precedence over channel 2's output (humidity).
(LED 1)	This LED indicates the operation of the Main Board Computer circuitry. It pulses at a fairly constant rate (with varying intensities) during normal operation.
(F1, F2)	These are the power supply fuses in the 115 VAC input circuit. They protect the Main Board from over-voltage input.
(F3)	This fuse protects the 5 Volt Power Supply from over-current conditions. On some Version II boards, this fuse may be labeled RS1 or RS2.

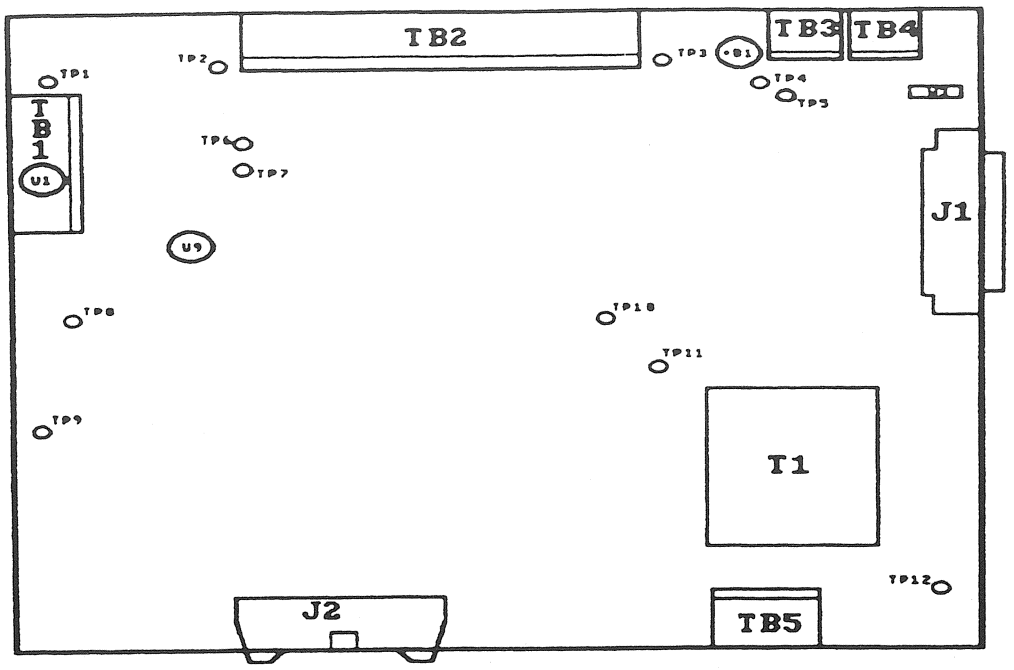

FIGURE 2a 2800 MAIN BOARD

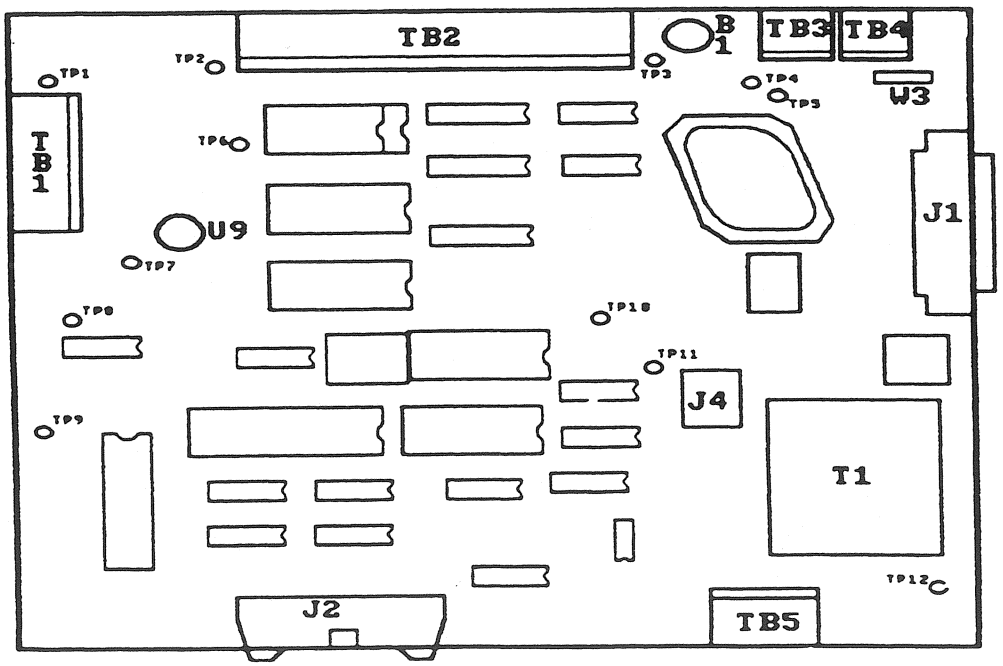

FIGURE 2b 2800/4800 MAIN BOARD VERSION I

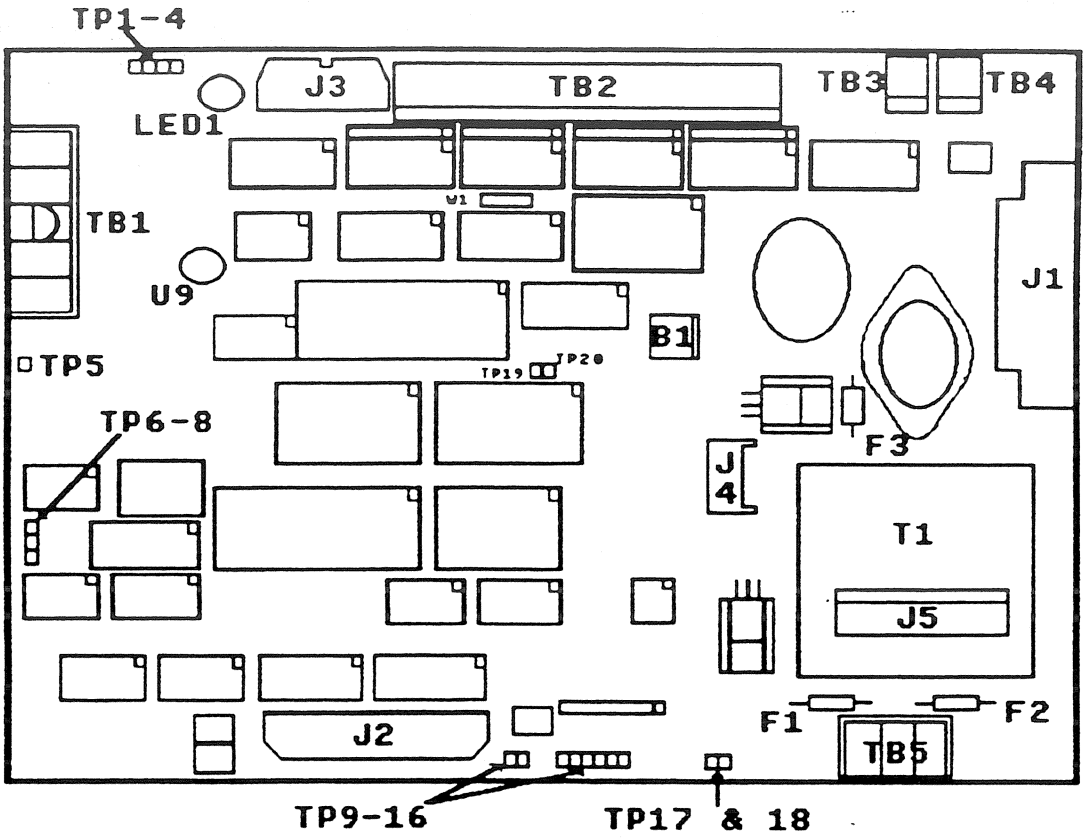

FIGURE 2c 2800/4800 MAIN BOARD VERSION II

2.2 Display Head

2.2.1 How To Identify

There are three versions of the Display Head. Throughout this manual, they are referred to as Version I, II, and II. Version I was a surface mount type. Version II and III are flush mount types. Refer to Figure 3a thru 3c as you read thru the description of the Display Head.

The Display Head consists of Vacuum Florescent Displays, Status LED's, Keyboard Connector and the Main Board Interface Cable Connector.

2.2.2 Functional Description

The Display Head provides the user interface functions for the 2800/4800 system. The following paragraphs describe these functions.

Data Display Function

The Display Head contains two vacuum Florescent displays and their drivers. The upper display is a 10 character, 14 segment, alpha numeric display. The lower display is a 4 character, 7 segment, numeric display. The upper display is used to operate the system and identify data displayed on the lower display. The lower display shows numeric data.

Status Display Function

The Display Head contains ten LED's. These LED's display the current operating status of the system. Eight of these LED's are located behind the function keys. They are normally lit when the associated function is active. The remaining two LED's are identified as the Channel 1 and Channel 2 control output status LED's. They indicate the control action of the associated channel.

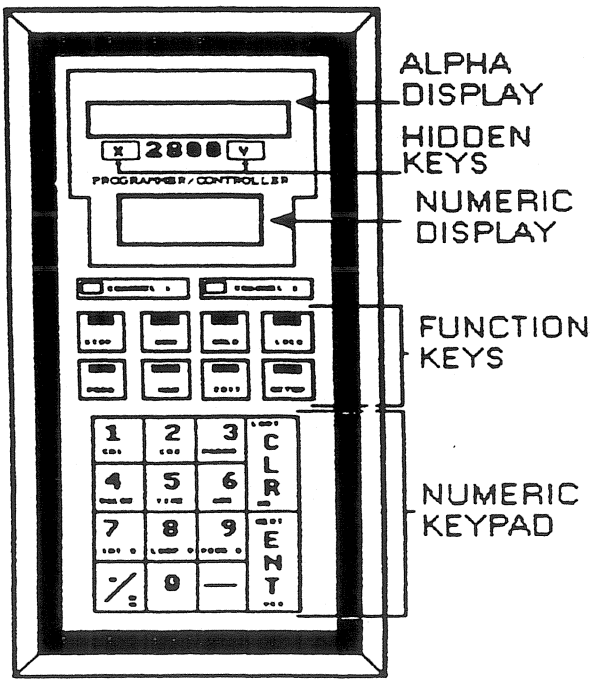

FIGURE 3a 2800/4800 FRONT PANEL

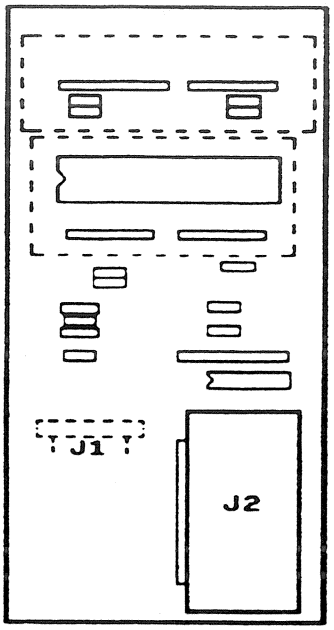

FIGURE 3b 2800/4800 DISPLAY HEAD VERSION I & II

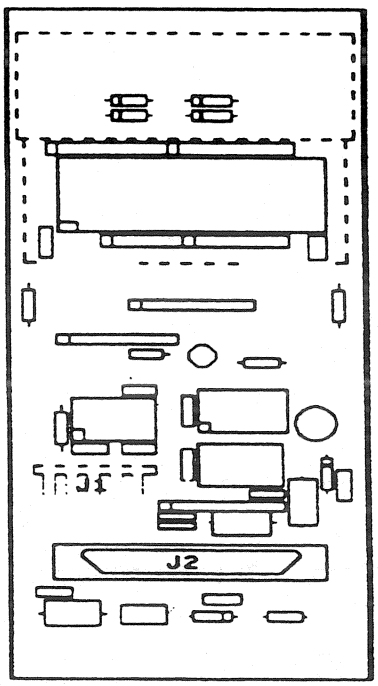

FIGURE 3c 2800/4800 DISPLAY HEAD VERSION III

2.3 4800 Function Board

2.3.1 How To Identify

There are two versions of the Function Board. One version contains an Analog-to-Digital Converter (U21) The other version does not. Refer to Figure 4 as you read thru the description of the Function Board

2.3.2 Functional Description

The Function Board provides six functions for the 2800/4800 system. The following paragraphs describe these functions.

Control Outputs Function

The Function Board provides five control output functions. They are:

- two stages of heating.
- two stages of cooling plus bypass.
- machinery time out signals for channels 1 and 2.
- process alarm outputs for channels 1, 2, and 3.
- and deviation alarm outputs for channels 1, 2, and 3.

Auxiliary and System Event Outputs Function

The Function Board provides outputs for Auxiliary Events Groups 2 and 3, and System Events 1 thru 5.

Remote Control Inputs Function

The Function Board provides five remote control inputs. These inputs are RUN, STOP, HOLD, RESTART, and PRINT TRIGGER. These same inputs can also be used to get the System Monitor status (if installed).

Remote Program Storage

The Function Board contains a Zero Insertion Force (ZIF) socket (U1). This socket is used to save, load and/or transfer user profiles from/to an EEPROM. POWER MUST BE REMOVED FROM THE 4800 WHEN THIS FUNCTION IS USED. The socket can also be used to connect the remote EEPROM programming assembly.

Analog Input and Conversion Function (used on boards with an A-to-D Converter)

The Function Board provides analog-to-digital conversion. When any type of electronic sensor (except a thermocouple) is used, the Function Board receives an analog signal and converts it to a digital signal. This signal is applied to channel 2 and 3 respectively

Analog Output Function (used on boards with an A-to-D Converter)

The Function Board provides analog signals to external controlling or recording devices such as transducers (controlling devices) or recorders (chart recorder).

2.3.3 Identified Components.

TP1-2 These test points (TP) are on both of the Function Boards. Refer to Appendix B for the test point descriptions

J1 This connector provides the path for the Auxiliary Outputs Groups 2 and 3 from the Relay Board

J2	This connector provides the path for the System Events Outputs and Channel 3 Alarm Outputs from the Relay Board
J3	This connector provides the path for Channel 1 Control and Alarm Outputs from the Relay Board
J4	This connector provides the path for Channel 2 Control and Alarm Outputs from the Relay Board.
J5	This connector connects the Function Board to the Main Board.
J6	This connector connects the Main Board 5 Volt unregulated power to the function Board.
TB1	This terminal block connects the remote control inputs to chamber devices. (Refer to Appendix C.)
TB2, TB3	These terminal blocks connect the Function Board Analog Outputs to external controlling or recording devices.
TB4	This terminal block connects the analog inputs from the sensing devices to the Function Board.
U1	This is the ZIF socket which holds a program storage EEPROM or the cable to a remote EEPROM programming assembly.
U21	This is the Analog-to-Digital Converter found on some Function Boards.
RN2	This is a Range Programming Resistor Box for the Function Board analog inputs. It is needed whenever U21 is installed.
W1, W2	These jumpers select either Voltage (V position) or Current (I position) for the analog outputs
W3, W4	These jumpers select the polarity of the analog inputs. They are normally in position 1.

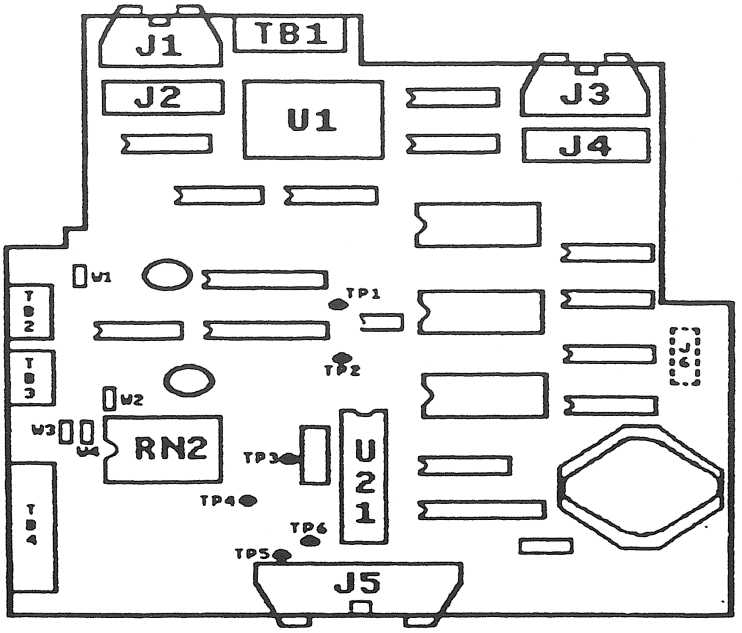

FIGURE 4 4800 FUNCTION BOARD

2.4 Multi-Option Board

2.4.1 How To Identify

There are two versions of the Multi-Option Board. Throughout this manual, they are referred to as Version I and II. Refer to Figure 5a and 5b as you read thru the description of the Multi-Option Board. On the Version I board, the battery B1 is located to the right of the J2 connector in the lower right-hand corner. On Version II, the battery is located to the right of TB2 in the upper right-hand corner

2.4.2 Functional Description

The Multi Option Board provides three functions for the 2800/4800 system. The following paragraphs describe these functions.

Real Time Clock Function — This function provides time keeping capabilities. It is used for delayed starting, and/or the time stamp for the printer interface data logging function.

Printer Interface Function — This function provides the 2800/4800 with the capability to send data to an external printer using an RS-232 interface.

Analog Output Function — This function provides two voltage only analog outputs (Analog output 1 & 2) to the 2800/4800 system. In a 2800 system, these voltages provide the process variable re-transmit signals for channel one and channel two respectively (typically to a recorder). In a 4800 system, these outputs may be configured to convert any one of the available channel related variables to an analog signal.

2.4.3 Identified Components

NOTE Items in Parentheses() are on the Version II Multi-Option Board only.

TP1(2-4): These test points (TP) are on the Multi-Option Board. Refer to Appendix B for the test point descriptions.

TB1-2: These terminal blocks connect analog outputs 2 and 1 (respectively) from the Multi-Option Board. See Appendix C.

J1: This connector provides connection capabilities to an optional printer.

J2 (P1): This connector connects the Multi-Option Board to the Main Board.

B1: This is the battery which provides power to the real time clock circuitry during power outages.

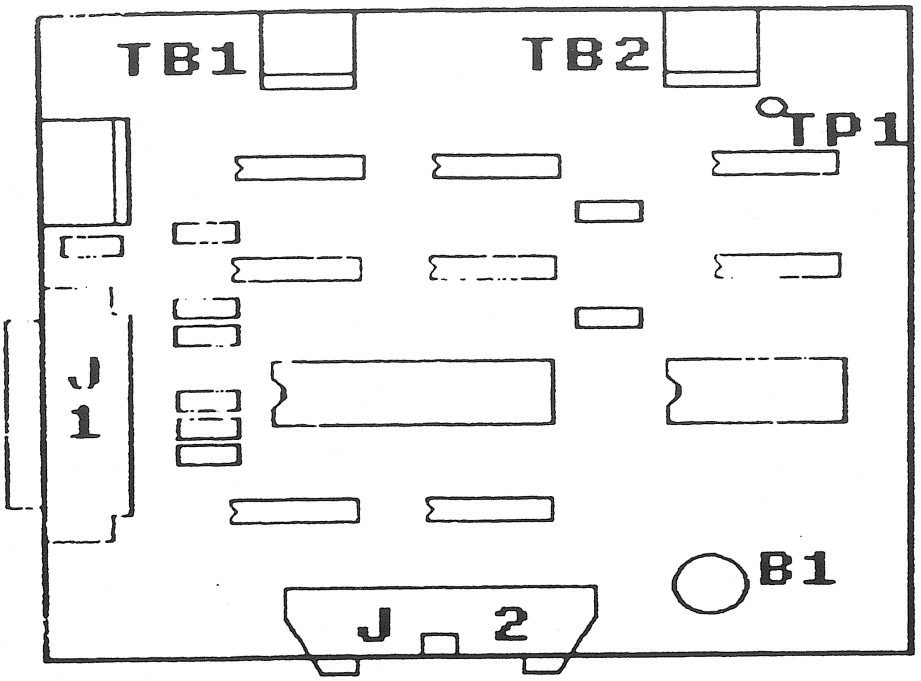

FIGURE 5a MULTI-OPTION BOARD VERSION I

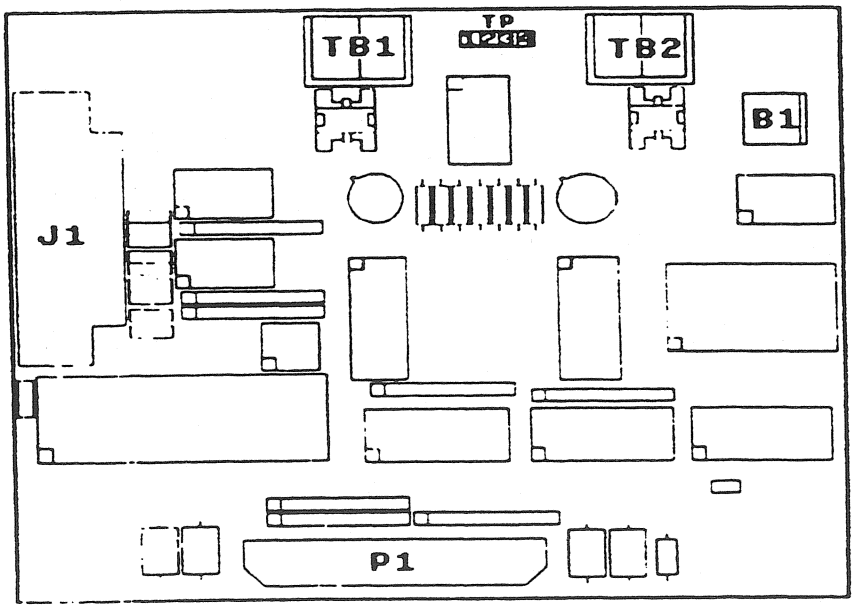

FIGURE 5b MULTI-OPTION BOARD VERSION II

2.5 COMPUTER I/O OPTION BOARD (GPIB or RS-232)

2.5.1 How to Identify

This board is optional on both the 2800 and 4800 systems. It may provide either GPIB or RS-232 communication capability, but not both. Only one Computer I/O Option Board can be installed in the system. There are three versions of the Computer I/O Option Board. Throughout this manual, they are referred to as the Version I(A), Version I(B), and Version II. Refer to Figure 6a, 6b, and 6c as you read thru the descriptions of this board.

The Computer I/O Option Board is identifiable by the presence of a 8-position DIP switch and 10-segment LED bar graph display. The Version I boards are identical. The Version II assembly is identifiable by the aluminum shield surrounding the interface connector.

2.5.2 Functional Description

The Computer I/O Option Board provides three major functions. The following paragraphs describe these functions.

Interface Parameter Selection Function — The 8-position DIP switch settings select the required interface parameters. These include the Device Address for GPIB use, and the Serial format (baud etc.), for RS-232 use. See the Operator's Manual for setting this switch.

Interface Status Display Function — The 10-segment LED bar graph display provides visual indications of the interface status. This is useful in computer interface troubleshooting between the 2800/4800 system and a remote computer. See the Operator's Manual for the definitions of these LED's.

Computer I/O Option Function: — The GPIB or RS-232 assembly contains the necessary hardware to perform the required interface functions. These include data transmission and receiving, handshaking, and others.

2.5.3 Identified Components

NOTE Items in parentheses are on the Version II Computer I/O Option Board only.

J1: This is a standard female DB-25S connector and connects the 2800/4800 system RS-232 interface to the Host Computer.

J2: This standard GPIB (IEEE-488) connector connects the 2800/4800 system interface to the Host Computer.

J3: This connector connects the Computer I/O Option Board to the Main Board.

L1 (DS1): This 10-segment bar graph display indicates the status of the 2800/4800 system Computer I/O Option.

SW1: This 8-position DIP switch selects the required interface parameters

(W1): This jumper (Version II only) selects either RS-232 or RS-485 signal levels and protocols on the Serial Interface Assembly.

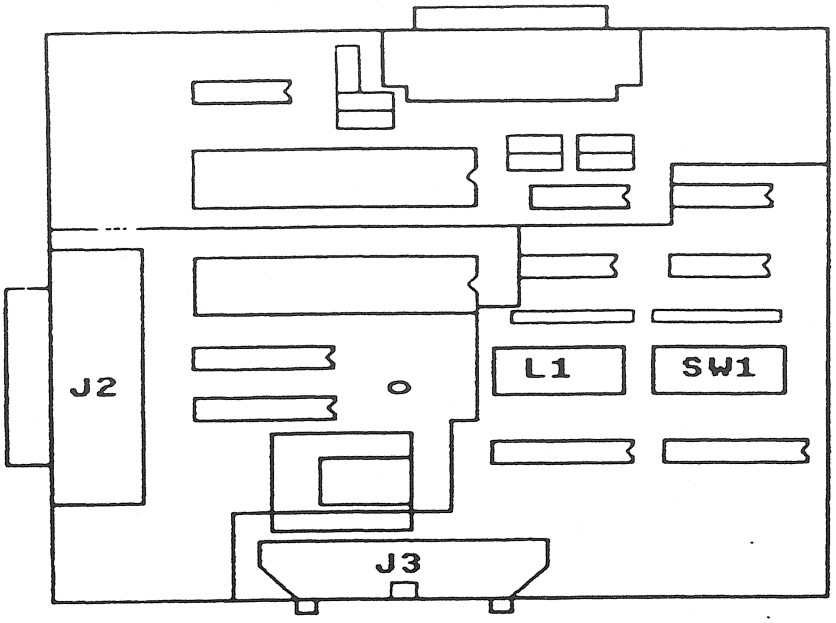

FIGURE 6a GPIB OPTION BOARD VERSION I A & B

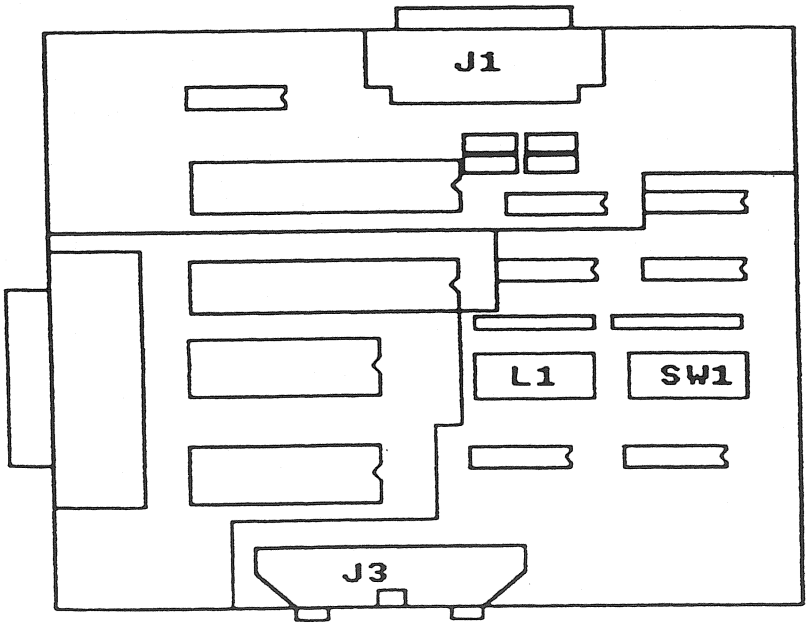

FIGURE 6b RS-232 OPTION BOARD VERSION I A & B

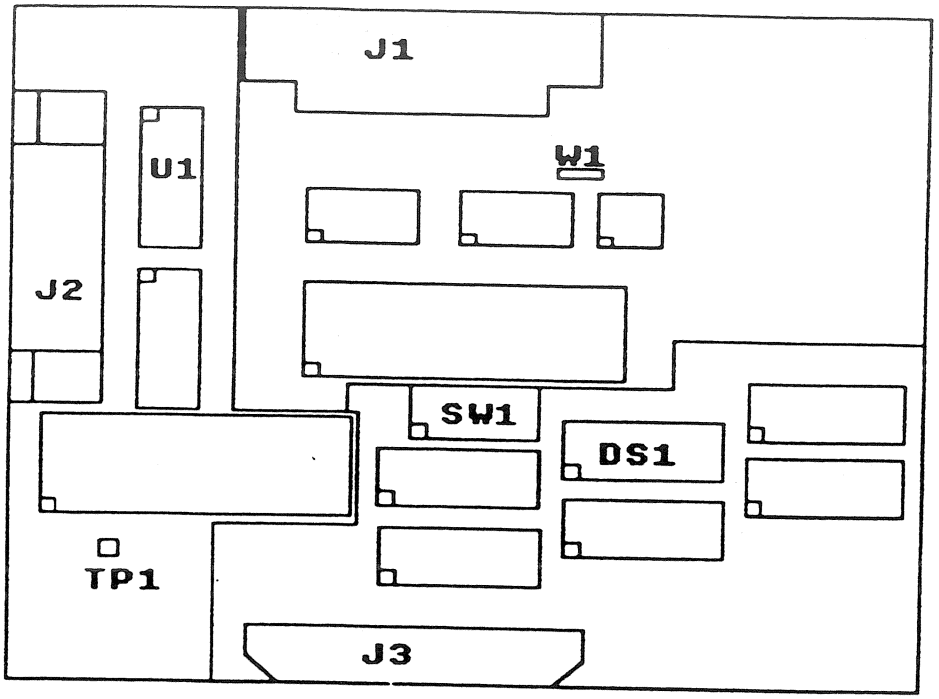

FIGURE 6c GPIB OPTION BOARD VERSION II

3. TROUBLESHOOTING PROCEDURES

3 1 GENERAL INFORMATION

To effectively troubleshoot the 2800/4800, you will need to review the 2800/4800 Figures and Descriptions and become familiar with its hardware assemblies. By having a general understanding of how these hardware assemblies look and fit together, you can more easily locate those assemblies when they are referred to in the troubleshooting symptom/solution step. In addition, the following steps should be taken EVERY time you attempt to troubleshoot the 2800/4800 system.

1 Go to the section of this manual entitled "Preliminary Troubleshooting Steps" FIRST! Some problems can be solved right away by doing these checks before any other troubleshooting is attempted.

2. Go to the "2800/4800 Miscellaneous Symptoms" Section next. Look through the symptoms that are listed there to see if any of them match the problem you are seeing. If so, follow the directions given in that section.

3. If your symptom(s) still remain, go to the "2800/4800 Symptoms/Solutions" chart and locate the symptom that most closely describes the problem you are experiencing.

4. Try the solution(s) listed for the symptom you've chosen. If these is more than one solution, try them in the order they are listed and re-evaluate your problem after each solution step. Stop troubleshooting as soon as you've found the problem. Be sure and do exactly what the instructions specify, or you may miss the solution to the problem completely. If you determine which board was the cause of the failure, reinstall all the boards you had exchanged during the troubleshooting process. See Appendix H for board replacement procedures.

5 If all of the applicable solution steps fail to solve the problem, coordinate with Thermotron Product Support for on-site service or to return the 2800/4800 system to Thermotron.

REMEMBER: You can only troubleshoot a 2800/4800 system down to the board level. Do not attempt to repair or replace any components on the boards themselves unless a particular solution step specifically instructs you to do so. If you run into problems that are not explained in this manual, contact Thermotron Product Support for further assistance.

IMPORTANT: Always remove power from the 2800/4800 system when connecting/disconnecting cables, boards, etc. Employ ESD protection measures when working with the 2800/4800 system to prevent damage to the electronics thru static discharge.

BEFORE you call Thermotron, be sure you have filled out the 2800/4800 TROUBLESHOOTING LOG SHEET.

3.2 PRELIMINARY TROUBLESHOOTING STEPS

There are certain steps which should be taken before any 2800/4800 troubleshooting is begun. This will get you to a known starting condition from which to begin your troubleshooting. Following these steps may actually solve your problem without the need for further troubleshooting.

1. Ensure that the 2800/4800 is supplied with a constant 115 Volt AC (±10%), 50 or 60 Hertz power supply. This may be checked on the power terminal block on the Main Board.

2. Cycle power to the 2800/4800 system.

3. Inspect all terminals and cable connectors for proper connections.

4. Perform all tests found in the diagnostics section of this manual relevant to your system configuration. See Appendix A.

5. Verify correct parameters at all test points identified in Appendix B.

3.3 2800/4800 TROUBLESHOOTING LOG SHEET

LOG THE FOLLOWING DATA BEFORE CALLING THERMOTRON PRODUCT SUPPORT

1. List all symptoms:

2. List results of diagnostics tests: (See Appendix A)

   Software Version:

3. Identify and list all options boards:

4. Computer Interface Board: GPIB RS-232
   Was it in use at the time of the failure?

5. Customer's Name:

6. Chamber Serial Number

3.4 2800/4800 MISCELLANEOUS SYMPTOMS

The symptoms listed in this section apply only to older versions of the 2800/4800 and are corrected only with new software. You must replace the Main Board to install new software.T

The symptoms are listed by the affected function.

Function	Symptom
Analog Input	4800 goes into STOP mode if analog input is momentarily over range.
Analog Outputs	%RH retransmit analog output does not shut off when running temperature only profiles.
Auxiliary Events	Auxiliary group #1 shuts down for a fraction of a second approximately every 15 minutes.
	Auxiliary group #2 becomes disabled during programming.
Control Outputs	Incorrect channel two time proportioning outputs when channel is configured for Heat Only control. Intermittent loss of heat control time proportioning pulse.
Delayed Start	Cannot cancel a delayed start one it has been programmed.
GPIB Interface	Time delayed required between Write and Read operation when very fast Host Computer is used. 2800/4800 system resets to the STOP mode during frequent GPIB communications with a fast Host Computer.
Machinery Control	2800/4800 configured for heat only fails to shut off the refrigeration machinery during a 100% heat demand cycle.
RS-232	Missing data when 2800/4800 sends information to remote Host Computer.

3.5 2800/4800 TROUBLESHOOTING CHART

SYMPTOM	SOLUTION(S)
1. Alpha and Numeric Displays: Displays are blank or show "garbage."	1. Cycle power to instrument. 2. Check Display Head to main Board cable and connections. 3. Perform "RAM Test" (pg A-1). 4. Isolate Main Board and Display Head by disconnecting all option boards. Apply power, and check for correct operation. 5. Perform "RAM Test" again (pg A-1). 6. Exchange Display Head. 7. Exchange Main Board.
2. Status LEDs: LEDs all on, all off, or not indicating correct status.	1. Perform "Display Test" (pg A-2). 2. Follow steps under Symptom #1 (Alpha and Numeric Displays).
3. Keyboard: Some or all of the keys do not work.	1. Verify keyboard is unlocked. 2. Perform Key Test diagnostic. See Appendix A. 3. Check remote key lock if installed. Disconnect wire from Main Board TB2-14 and try keyboard again. 4. Follow steps under Symptom #1 (Alpha and Numeric Displays).
4 T/C Input: Error in temperature or humidity reading.	1. Follow calibration procedure in Operator's manual. 2. Check configuration. See Appendix E. 3. Exchange Main Board.
5 T/C Input: Alpha display shows "OPEN T/C."	1. Check for open thermocouple by shorting input terminals with a short jumper wire. 2. Follow steps found under Symptom #4 (T/C Input)

SYMPTOM	SOLUTION(S)
6. T/C Input: Reading drifts with ambient temperature or time. "Loses calibration."	1. Calibrate T/C input(s) and check for drift. 2. Exchange Main Board.
7. 2800 Control Outputs: Missing or incorrect heat and/or humidity outputs from Main Board.	1. Use Manual Throttle mode to call for 50% heat or humidity demand. See Appendix A. 2. Monitor voltage on TB3-1 and TB3-2 and/or TB4-1 and TB4-2 (common) for pulses greater than 3 Volts DC. 3. If voltage pulses are present, check external circuitry. 4. Exchange Main Board if pulses do not appear.
8. Main Board Outputs: Some or all of the Main Board output signals do not work.	1. Operate 2800/4800 such that output in question is on. 2. Monitor the output terminal in question on TB2 for a voltage greater than 3 Volts DC. 3. If signal voltage is present, check external circuitry. 4. Exchange Main Board if required signal does not appear.
9. 4800 Control Outputs: Missing or incorrect channel 1 and/or channel 2 outputs from 4800 Function Board	1. Use manual Throttle mode to call activate output in question. See Appendix A. 2. Monitor voltage on Relay Board TB1 that corresponds to the output in question for pulses greater than 3 volts DC. 3. If voltage pulses are present, check external circuitry, SSRs, etc. 4. Check cable connections between 4800 Function Board and Relay Board(s). 5. Exchange 4800 Function Board. 6. Exchange Main Board.

SYMPTOM	SOLUTION(S)
10. 4800 Misc Outputs: Some or all of the misc outputs from 4800 Function Board do not work.	1. Operate 4800 such that output in question is on. 2. Monitor voltage on Relay Board TB1 that corresponds to the output in question for signal greater than 3 Volts DC 3. If Voltage is present, check external circuitry 4. Check cable connections between 4800 Function Board and Relay Board(s). 5. Exchange 4800 Function Board 6. Exchange Main Board
11. 4800 Analog Inputs: Alpha display shows "OPEN AIN."	1. Calibrate using procedure in Operator's Manual. 2. Check configuration. See Appendix E. 3. Exchange 4800 Function board. 4. Exchange Main Board.
12. 4800 Analog Output: Outputs from 4800 Function Board not correct.	1. Check for output on appropriate terminal block. See Appendix C. 2. Calibrate using procedure in Operator's Manual. 3. Check configuration. See Appendix E. 4. Check jumpers W1 and W2 for correct selection, voltage or current output. 5. Exchange 4800 Function Board.
13. 4800 Remote Inputs: Inputs not working correctly.	1. Use a jumper from 4800 Function Board terminal TB1-6 (COM), to the input in question to activate the input. 2. If input works using jumper, check external wiring. 3. Exchange 4800 Function Board

SYMPTOM	SOLUTION
14 4800 Program EEPROM: Not able to save/load programs on remote EEPROM	1 Exchange EEPROM 2 If problem is in the loading of an EEPROM program from a different 4800, ensure that both 4800's are same configuration 3 If external EEPROM assembly is installed, disconnect cable from ZIF socket U1 and install EEPROM directly into socket U1 in its place. If function now working, problem is in external EEPROM board and/or interconnect cable 4. Exchange 4800 Function Board.
15. Multi-Option Analog Outputs: Analog output from Multi-Option Board not correct	1. Check for output on appropriate terminal block. See Appendix C 2 Calibrate using procedure in Operator's Manual. 3. Check configuration See Appendix E. 4. Exchange Multi-Option board.
16. Real Time Clock: RTC loses time.	1. Check voltage across battery B1 on Multi-Option Board with power removed from system. Voltage should be greater than 2.8 Volts DC. 2. Exchange Multi-Option Board 3. Exchange Main Board.
17. Real Time Clock: RTC gains time.	1. Exchange Multi-Option Board.
18. Real Time Clock: Can not set RTC	1 Check cable/connections of the Option Board interface 2 Exchange Multi-Option Board

SYMPTOM	SOLUTION(S)
19. Printer Interface: Printer not printing data or printer missing some data.	1. Verify setting of Print Int Time parameter to a non-zero value. 2. Ensure that printer is on and has paper. 3. Check cable and connections from 2800/4800 to printer. 4. Exchange printer or if an RS-232 terminal is available configure it using the 2800/4800 RS-232 parameters. Connect to Multi-Option board connector J1, and observe terminal CRT for data from printer. 5. Exchange Multi-Option Board. 6. Exchange main Board.
20. Computer Interface: Will not communicate with Host Computer.	1. Refer to Appendix G for common questions and problems with computer interfacing. 2. Use the bar graph LEDs on the Computer Interface Board as a debugging tool. See the Operator's Manual for a description of each LED 3. Substitute a "dumb" terminal for the RS-232 Host Computer. 4. Use a bus analyzer to debug the GPIB interface. 5. Exchange the Computer Interface board. 6. Exchange the Main Board.
21. Miscellaneous: System goes into STOP.	1. Examine STOP CODE. See Appendix D. If stop code is "1," and key was not pressed, then exchange Display Head. 2. If stop code is not "1," then track fault as indicated by stop code. See Appendix D. 3. If not identified, exchange main board.
22. Miscellaneous: Inconsistent, undocumented, or incorrect operation.	1. Cycle power to the 2800/4800. 2. Perform RAM test (pg A-1). 3 Exchange Main Board.

A. APPENDIX A – DIAGNOSTIC TESTS

A.1 MANUAL RESET

Some of the following tests require the use of the Manual Reset function. The following procedure is used to perform a Manual Reset:

1. Press and hold the CLR and STOP keys at the same time.

2. The alpha display, numeric display, Chanel 1 LED, and Channel 2 LED will go blank. The 2800/4800 is now in the Reset condition.

3. The 2800/4800 will remain in the Reset condition for approximately.1 to 2 seconds. If one of the following diagnostic tests instruct the user to press another key during this time, release the CLR and STOP keys, and quickly press and hold the required diagnostic key.

A.2 RAM TEST

The RAM Test tests the RAM device on the Version II 2800/4800 Main Board only. This test is also used to clear and initialize the 2800/4800 memory.

CAUTION: The user programs are erased during the RAM Test.

1. Perform the Manual Reset as described in paragraph A.1.

2. While the 2800/4800 is in the Reset condition, press the hidden **X** key.

3. For approximately 2 seconds, the 2800/4800 alpha display shows:

   TSTING RAM

4. If the RAM Test passes, the 2800/4800 alpha display shows:

   -RAM OK-

5. If the RAM Test does not pass, the 2800/4800 alpha display shows:

   RAM FAILED

6. Press the STOP key to return to the normal operating mode.

A.2 ROM TEST

The ROM Test checks the installed firmware memory. It is only valid on 2800/4800 Version II Main Boards.

1. Perform the Manual Reset described in Paragraph A.1.
2. While the 2800/4800 is in the Reset Condition, press and hold the hidden Y key.
3. For approximately 1 second, the 2800/4800 alpha display shows:

   TSTING ROM

4. Once the ROM test is complete, the 2800/4800 alpha display shows:

   CHECK SUM

   The numeric display shows the actual value of the check sum. The value should be "0"

5. Press the STOP key and return to the normal operating mode.

A.3 DISPLAY TEST

The Display Test exercises all the display functions of the 2800/4800 Main Board and Display Head. This test is used to identify a malfunctioning display and/or malfunctioning status LEDs.

1. Perform the Manual Reset described in Paragraph A.1.
2. While the 2800/4800 is in the Reset condition, press and hold the ./: key.
3. The alpha display scrolls thru its entire character set, which includes all uppercase letters, numbers, and some special characters.
4. The numeric display sequences numbers 0 thru 9, placing each digit (except 0) in each of the four character positions.
5. The status LEDs come on sequentially. The CHANNEL 1 LED comes on with the SET UP LED, and the CHANNEL 2 LED comes on with the LOCK LED.
6. Press the STOP key to return to the normal operating mode.

A.4 KEY TEST

The Key Test allows the user to test the action of all the keys on the 2800/4800 Display Head.

1. Perform the Manual Reset described in paragraph A.1.
2. While the 2800/4800 is in the Reset condition, press the minus (-) key.
3. The 2800/4800 alpha display shows:

   KEY TEST

4. Press each key (except the **STOP** key) to test it. The alpha display indicates the key closure.
5. Press the **STOP** key to return to the normal operating mode. (This will also test the **STOP** key.)

A.5 SOFTWARE VERSION

The installed software version is displayed on the Version II Main Board only by using the following procedure. This information may be required if you call Thermotron Product Support.

1. Perform the Manual Reset described in paragraph A.1.
2. While the 2800/4800 is in the Reset condition, press the **LOCK** key.
3. The 2800/4800 alpha display shows the software version in the format "Vn-xx-yy." Record the version number for future reference.
4. Press the **STOP** key to return to the normal operating mode.

A.6 MANUAL THROTTLE

The Manual Throttle mode of operation is useful in troubleshooting the control outputs of the 2800/4800. By using manual throttle(s), the user can specify exactly the amount of throttle or output required for testing the actual output voltage. The following procedure is used to enter the Manual Throttle mode and to adjust the controller output throttles.

WARNING: When the user selects Manual Throttle operation, the 2800/4800 does not control the temperature. As a result, the temperature can go beyond what is safe for the chamber. It is the user's responsibility to ensure that the chamber is not damaged.

1. Place the 2800/4800 in the RUN MANUAL mode by pressing the **RUN** and **MAN** keys.
2. Press the **MAN** key again. The 2800/4800 alpha display shows:

   MAN THROTL

3. Press the hidden **X** key. The 2800/4800 alpha display shows:

   ENABLED

   for approximately 2 seconds. The Manual Throttle mode is now enabled; however, the 2800/4800 will continue to control automatically until the throttle(s) is edited by the user as described in the following steps.

4. Use the **PARAMETER** key and **CH #** key to select the Throttle display for the desired channel.

5. Press the **EDIT** key to enter the Edit mode.

6. Use the number keys to change the displayed throttle value to the desired setting. Press the **ENTER** key to enter the new value. The throttle for the selected channel is now operating in the Manual mode. The throttle(s) for unedited channels remain in the Automatic mode.

7. Repeat steps 4 thru 6 to change the manual throttle setting.

8. Press the **STOP** key to exit the Manual Throttle mode and return to the Stop mode.

B. APPENDIX B - TEST POINTS

3.1 GENERAL DESCRIPTION

The following table lists the test points on the 2800/4800 boards. A typical reading is given for each test point. These values may help to determine if the board in question is operating correctly.

2800/4800 Main Board (2800 only, and 2800/4800 Version I)

Test Point	Value
TP 1	Negative Reference Voltage for analog circuit -2.5 VDC ±0.05V.
TP 2	Ch. 1conditioned T/C signal (Ambient junction at 25°C). -87°C input = 0.25 VDC ±0.02V +191°C input = 2.25 VDC ±0.08V.
TP 3	+5 Volts Protected (Battery). +3.0 VDC ±0.2V. Read with Power OFF.
TP 4	+5 Volt Power Supply ±0.2V.
TP 5	-15 Volt Power Supply ±0.45V.
TP 6	+15 Volt Power Supply ±0.45V.
TP 7	Ch. 2 conditioned T/C signal (Ambient junction at 25°C) (two channel units only). -87°C input = 0.25 VDC ±0.02V +191°C input = 2.25 VDC±0.08V.
TP 8	Positive Reference Voltage for analog circuit + 2.5 Volts DC ±0.05V.
TP 9	Ambient Compensator Voltage + 1.2 VDC @ 25°C room temperature ±0.02V.
TP 11	Common.
TP 12	Display voltage - 23 VDC ±3.0V.

2800/4800 Main Board Version II

Test Point	Value
TP 1	Ch. 1 conditioned T/C signal (Ambient junction at 25°C). -150°C input = -2.30 VDC ±0.06V +250°C input = +2.25 VDC ±0.06V.
TP 2	Ch. 2 conditioned T/C signal (Ambient junction at 25°C) (2 channel units only). -150°C input = -2.30 VDC ±0.06V +250°C input = +2.25 VDC ±0.06V.
TP 3	Reference Voltage + 1.23 VDC ±0.3V.
TP 4	Ambient Compensator Voltage -0.7 VDC @ 25°C room Temperature ± 0.2V.
TP 5	-5 Volt Power Supply - 5.0 VDC ±0.4V.
TP 11	Battery Voltage +3.0 VDC ±0.2V Read with Power OFF.
TP 13	- 5 Volt Power Supply +5.0 VDC ±0.2V.
TP 14	-15 Volt Power Supply - 15 0 VDC ±0 4V.
TP 15	-15 Volt Power Supply -15 0 VDC ±0 4V
TP 16	Common

4800 Function Board

Test Point	Value
TP 1	Negative Reference Voltage -2.5 VDC ±0.2V.
TP 2	Positive Reference Voltage +2.5 VDC ±0.2V.

Multi-Option board Version I

Test Point	Value
TP 1	Positive Reference Voltage +5.0 VDC ±0.25V.

Multi-Option board Version II

Test Point	Value
TP 1	Positive Reference Voltage +5.0 VDC ±0.25 V.
TP 2	Common.

C. APPENDIX C - TERMINAL BLOCK DEFINITIONS AND RELAY BOARD ASSIGNMENTS

C.1 GENERAL DESCRIPTION

2800 Only Main Board Terminal Block #1

Terminal	Definition
TB1-1	Channel 1 (+) Thermocouple, (blue) connection.
TB1-2	Channel 1 and 2 (-) Thermocouple, (red) connection.
TB1-3	Not Used (Ambient Compensator)
TB1-4	Channel 2 (+) Thermocouple, (blue) connection.

2800/4800 Main Board Terminal Block #1 (Version I & II)

Terminal	Definition
TB1-1	Channel 1 (+) Thermocouple, (blue) connection.
TB1-2	Channel 1 (-) Thermocouple, (red) connection.
TB1-3	Not Used (Ambient Compensator)
TB1-4	Channel 2 (-) Thermocouple, (red) connection.
TB1-5	Channel two (+) Thermocouple, (blue) connection.

2800/4800 Main Board Terminal Block #2 (All Versions)

Terminal	Definition
TB2-1	Refrigeration Machinery Enable output. This signal is activated when the refrigeration machinery is required.
TB2-2	Channel 1 Alarm output. This signal is activated when channel 1 is in alarm, either process or deviation.
TB2-3	Signal Common.
TB2-4	Auxiliary output #4. This signal is on when Auxiliary output #4 (4800 Group 1) is selected.
TB2-5	Auxiliary output #3. This signal is on when Auxiliary output #3 (4800 Group 1) is selected.
TB2-6	Auxiliary output #2. This signal is on when Auxiliary output #2 (4800 Group 1) is selected.
TB2-7	Auxiliary output #1. This signal is onon when Auxiliary output #1 (4800 Group 1) is selected.
TB2-8	Signal Common

TB2-9	Channel 2 Alarm output. This signal is activated when channel 2 is in alarm, either process or deviation.
TB2-10	Humidity System Enable output. This signal isactivated when the Humidity System is required.
TB2-11	Signal Common.
TB2-12	System Enable output. This signal is activated when the 2800/4800 is in the RUN mode (either Program or Manual).
TB2-13	Auxiliary Cooling Output. This signal is activated (pulse) when auxiliary cooling is required.
TB2-14	External Keyboard Lockout Input. This input locks the 2800/4800 function keys when brought to a low state (less than 0.7V)
TB2-15	Dual Humidity System Select Input. This input selects the analog %RH input when brought to a low state.
TB2-16	Signal Common.

2800/4800 Main Board Terminal Blocks #3 & #4 (All Versions)

Terminal	Definition
TB3-1	Heat Control Time Proportion Output. This output pulses the Heat Control in proportion to the heat throttle. (2800 use only)
TB3-2	Signal Common for TB3-1 above.
TB4-1	Humidity Control Time Proportion Output. This output pulses the Humidity Control in proportion to the humidity throttle. (2800 use only) This signal is also used as the refrigeration machinery enable output on 2800 only units when used on S1.2 model chambers.
TB4-2	Signal Common for TB4-1 above.

2800/4800 Main Board Terminal Block #5 (All Versions)

Terminal	Definition
TB5-1(G)	115 VAC Power Supply Earth Ground Connection.
TB5-2(N)	115 VAC Power Supply Neutral Connection.
TB5-3(L)	115 VAC Power Supply Line Connection.

EXAMPLE #4 (PC USING COM1 SERIAL PORT)

This example will initialize the 4800, load channel one set point with 25 degrees, issue the run manual command, then instruct the 4800 to send the temperature value. The computer will read the value and display it on the CRT display, then repeat the dump/read sequence. Note that the loop counter instruction on Line 120 must provide a three second delay. Adjust this instruction, or any time delay command to provide a three second delay.

```
100 OPEN "COM1:" AS #1          ' Open the serial channel using default
                                  parameters.

110 PRINT #1, "I"               ' Send the initialize command.

120 FOR T=0 TO 2000 : NEXT T    ' Wait approximately three seconds for the
                                  4800 to reset

130 V$ = SPACE$(40)             ' Reserve some space for the return
                                  variable.

140 PRINT #1, "L1S25"           ' Set command for Load channel one
                                  set point with 25 degrees.

150 PRINT #1, "RM"              ' Send the Run Manual command

160 PRINT #1, "CB;D1V"          ' Clear the output buffer and command
                                  the 4800 to send the temperature

170 LINE INPUT #1,V$            ' Read the 4800's response and put in
                                  string variable 'V$'

180 PRINT "Temp = ";V$          'Write the result on the CRT

190 GOTO 160                    ' Repeat reading and displaying temp.
```

SECTION VII
4800 COMMON COMPUTER I/O PROBLEMS AND QUESTIONS

The following problems and questions have been asked concerning the implementation of the computer interface option for the 4800. The answers to these questions are presented here to aid the user in accomplishing their task of interfacing the 4800. These questions and answers should be reviewed. They provide valuable even if the user does not run into the specific problem.

These problems may be divided into the following categories:

1. Not able to communicate at all.
2. Can send commands, but can't get data.
3. Get some data back from the 4800, however it is wrong or garbled.
4. Can send and receive, but have problems with some specific commands.

Before trying to implement the 4800 communication with a user's application program, it is often helpful to practice using a more direct communication mode. This can be done using the following methods.

- Use a 'dumb' terminal, or a terminal emulation program for RS-232/RS-485 applications.
- Use the GPIB interface in an interactive or direct mode, such as using the National Instruments 'IBIC' program.

Establishing communications in this way will allow the user to become familiar with the syntax of the commands, and data formats used by the 4800. It is also easier to troubleshoot any problems when operating in that mode.

NOT ABLE TO COMMUNICATE AT ALL

The first solution, which is often overlooked, is to check the wiring and interconnections between the computer and the 4800. A breakout box or bus analyzer can be very helpful here.

RS-232 Check that all necessary lines have been connected, and to the correct pins of the connectors. Review the signal line descriptions for the 4800 and for your computer.

GPIB Check that all cable connections are tight, and do not rule out a faulty cable.

The next item to check is that both the computer and the 4800 are using the same interface parameters. These parameters are set with the DIP switch on the computer interface option board. Remember that the 4800 must be reset before it will use the new switch settings, either through a power cycle, or through a manual reset, (CLR and STOP keys pressed together).

RS-232 Check the settings of the baud, bits per character, parity, handshake etc.

GPIB Check the address selection. Remember that each instrument on the bus must have a unique address in the range of 0 to 30. Also, when set-

ting the address of the 4800, remember that the individual switches apply their weighted value when they are in the off position.

CAN SEND COMMANDS, BUT CAN'T GET DATA

When the commands are accepted by the 4800, but no data is being sent back, the computer interface terminator or the handshake signals could be set up improperly. These problems and their solutions are described below.

TERMINATOR PROBLEM

The most common problem related to this symptom is that the 4800 and the host computer are not in agreement on the terminating character or sequence to be used by the 4800.

When the 4800 is receiving command strings, it will use any of the legal terminators to signify the end of the command string. Most computers are not as flexible when it comes to receiving data for the 4800. For this reason, the 4800 has the selections available for the data output terminating sequence. Make sure the 4800 and the computer agree on the selected one.

For example, the ENTER statement on the HP-85 computer requires a line feed character, the National Instruments card for the PC has some flexibility for input termination, but must be configured, and the LINE INPUT statement in a BASIC program, using the COM1 serial port on a PC, requires a carriage return character.

HANDSHAKE PROBLEM

Another possible reason for not receiving data when expected when using RS-232, could be due to lack of handshaking. The 4800 may 'think' that the computer is busy, and therefore will not send the requested data.

To check this possibility, disconnect the handshake input lines, pin numbers 4 and 20, between the 4800 and the computer. Set the 4800 for busy low handshaking polarity (sw6 on). This will imply that the computer is always ready for data, so the 4800 will send the requested data as soon as it receives the dump command.

GET SOME DATA FROM 4800, WRONG OR GARBLED

Wrong or garbled data can be caused by improper use of command sequences or by entering the improper communication parameters. The more common problems and solutions are described below.

BUFFER OUT OF SYNCH

This symptom usually results from the 4800 having excess data in its output buffer. This typically occurs when the computer does not read all the data it has asked for.

The problem can usually be corrected by using the Clear Buffer (CB) command concatenated before every dump command. This will cause the 4800 to clear any characters left over in its output buffer before loading the data requested by the dump command.

PARAMETER MISMATCH

This problem could also be caused by a mismatch in the RS-232 communication parameters such as baud or bit per character, so these should be checked.

PROBLEMS WITH SPECIFIC COMMANDS

Some commands may cause problems if they are not used in the proper manner or sequence. A useful aid in trouble shooting these types of problems is to use the error codes available from the 4800 thru the DEC command.

If Load commands are sometimes not accepted, check that the data sent with the command is in the range acceptable to the 4800 for that command. For example, sending the command 'L2S-10' would not be acceptable if channel 2 is Relative Humidity.

Some load commands require that the data be sent in a decimal representation of a binary number. These include the load auxiliary command, the load SRQ mask command, etc. For example, to turn auxiliary outputs #1, and #3 on (binary 0101), the correct command would be 'LAX 5', since 0101 binary equals 5 decimal.

Similarly, some dump commands send data which represents binary information and must be de-coded as such.

If the LPM and LPI commands are causing problems, it could be that interval #0 is not being sent. Also, when loading by value, the data fields are position dependant, commas must be used to maintain correct position.

Keep your Thermotron equipment at top efficiency with our preventive maintenance program.

Our environmental simulation equipment and systems are designed to provide many years of dependable service. But for maximum efficiency at all times, each system must be properly maintained and serviced.

Our field service engineers are always on hand to provide emergency service, but with a Preventive Maintenance Agreement, it will seldom be necessary. You'll see:

- Improved operation with the system properly adjusted and calibrated (NBS traceability can be provided).
- Reduced operating costs due to fewer "crisis" situations.
- Increased efficiency with maintenance performed according to your schedule.
- More accurate operating budgets: You'll know your yearly maintenance cost in advance.
- Improved use of funds with less of your money invested in spare parts inventory.
- Simplified administrative procedures — one purchase order keeps the agreement in force for a full year.

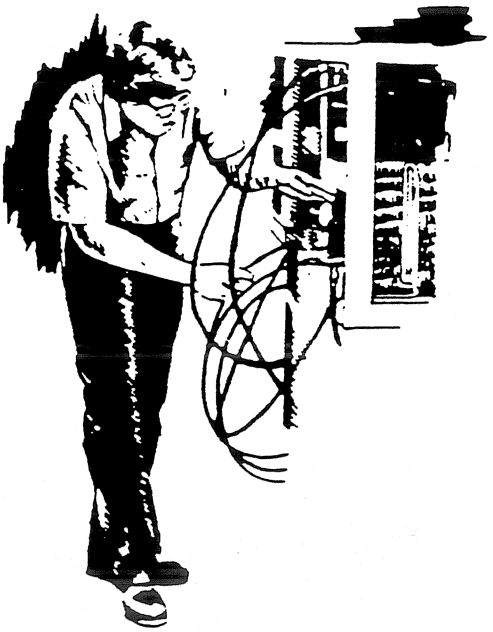

For further information about our Preventive Maintenance Agreement and how it can benefit the operation of your plant, call us — (616) 392-1491

4800 Function Board Terminal Block #1

Terminal	Definition
TB1-1	External RUN Input. The 4800 goes into the RUN mode, if it was in the HOLD mode, when this signal is brought low (less than 0.7V)
TB1-2	External STOP Input. The 4800 goes into the STOP mode, if it was in the RUN MANUAL or RUN PROGRAM mode, when this signal is brought low (less than 0.7V)
TB1-3	External HOLD Input. The 4800 goes into the HOLD mode, if it was in the RUN PROGRAM mode, when this signal is brought low (less than 0.7V)
TB1-4	External RESTART Input. The 4800 attempts to RUN Program #1, Interval #1, when this signal is brought low (less than 0.7V). The 4800 must be in STOP, and Program #1 must exist.
TB1-5	External Print Trigger Input. The 4800 causes data to be sent to the external printer when this signal is brought low.
TB1-6	Signal Common for the above Input signals.

4800 Function Board Terminal Blocks #2 & #3.

Terminal	Definition
TB2-1	Voltage output for Analog Output #3. Note that jumper W1 must be in the 'V' position.
TB2-2	Current output for Analog Output #3. Note that jumper W1 must be in the 'I' position.
TB2-3	Signal Common for Analog Output #3.
TB3-1	Voltage output for Analog Output #4. Note that jumper W1 must be in the 'V' position.
TB3-2	Current output for Analog Output #4. Note that jumper W1 must be in the 'I' position.
TB3-3	Signal Common for Analog Output #4.

4800 Function Board Terminal Block #4.

Terminal	Definition
TB4-1	Analog (+) Input for channel 2.
TB4-2	Analog (-) Input for channel 2.
TB4-3	Analog (+) Input for channel 3.
TB4-4	Analog (-) Input for channel 3.

Multi-Option Board Terminal Blocks #1 & #2

Terminal	Definition
TB1-1	Analog Output #2 (+) connection.
TB1-2	Analog Output #2 (-) connection.
TB2-1	Analog Output #1 (+) connection.
TB2-2	Analog Output #1 (-) connection.

Relay Board(s) Terminal Blocks #1, #2, & #3

Terminal	Definition
TB1-1 thru 8	SSR control voltage that corresponds to SSRs 1 thru 8.
TB1-9	+5 VDC
TB1-10	Common
TB2-1, 2, 3	115 VAC wiring terminals for SSR #1. Note that terminals TB2-2 and TB2-3 are the same.
TB2-4, 5, 6	115 VAC terminals for SSR #2.
TB2-7, 8, 9	115 VAC terminals for SSR #3.
TB2-10 , 11, 12	115 VAC terminals for SSR #4.
TB3-1, 2, 3	115 VAC terminals for SSR #5.
TB3-4, 5, 6	115 VAC terminals for SSR #6.
TB3-7, 8, 9	115 VAC terminals for SSR #7.
TB3-10, 11, 12	115 VAC terminals for SSR #8.

C.2 RELAY BOARD SSR ASSIGNMENTS

The following table shows the SSR assignments on the 2800/4800 system connector that is the source for that Relay Board.

SSR DESIGNATION TABLE

4800 BOARD					2800/4800 MAIN BOARD	
J1		J2	J3	J4	J3	
AUX 1	AUX GRP 2	J2SYSTEM EVENT 1	HIGH HEAT CH. 1	HIGH HEAT CH. 2	AUX1	AUX GRP 1
AUX 2		SYSTEM EVENT 2	LOW HEAT CH.1	LOW HEAT CH.2	AUX2	
AUX 3		SYSTEM EVENT 3	LOW COOL CH. 1	LOW COOL CH. 2	AUX3	
AUX 4		SYSTEM EVENT 4	HIGH COOL CH. 1	HIGH COOL CH. 2	AUX4	
AUX 1	AUX GRP 3	SYSTEM EVENT 5	BY PASS CH. 1	BY PASS H. 2	SYSTEM ENABLE	
AUX 2			COMP. ENABLE CH. 1	COMP. ENABLE CH. 2	REFRIG. ON	
AUX 3		DEV. ALARM CH. 3	DEV ALARM CH. 1	DEV ALARM CH. 2	HUM. ENABLE	
AUX 4		PROC. ALARM CH. 3	PROC. ALARM CH. 1	PROC. ALARM CH. 2	AUX COOL	

D. APPENDIX D - STOP CODES

D.1 GENERAL DESCRIPTION

The 2800/4800 can provide the user with the reason why the unit is in the stop mode. This may be useful in trouble shooting the symptom 'Goes into STOP'. To view the last stop code, press the **STOP** key while the 2800/4800 is in the STOP mode. The 2800/4800 alpha display shows"

STOP CODE

and a number in the numeric display. Use the following table to interpret the meaning of the Stop Code.

STOP CODE TABLE

CODE	MEANING
0	Not in STOP mode, or 2800/4800 has not run since RAM Test. May be caused by external EMI/RFI. See Appendix F for Noise Immunization Procedures.
1	STOP key pressed while running. Normal stop code.
2	RAM Failure. The 2800/4800 has detected a storage memory error and placed the unit in STOP. May have been caused by external EMI/RFI. Refer to Appendix F.
3	Open T/C on channel 1. Check thermocouple and connections. See Symptoms/Solutions.
4	Open T/C on channel 2. See #3.
5	Temperature limit for 3.5 cu.ft. benchtop model exceeded (115°C).
6	Channel 1 variable exceeded process alarm settings. Check alarm settings.
7	Channel 2 variable exceeded process alarm settings. Check alarm settings.
8	Computer I/O Stop command (S) was received.
9	Test Complete, End of user's profile. Normal stop code.
10	Channel 3 variable exceeded process alarm settings. Check alarm settings.
11	External STOP Input (from 4800 Function Board).
12	Open Analog Input on channel 2 (4800 Function Board).
13	Open Analog Input on channel 3 (4800 Function Board).
14	Analog-to-Digital Watch Dog time-out. Implies failure of A-to-D convertor. Replace 4800 Function Board.
15	Stop command from System Monitor Input (from 4800 Function Board).
16	Computer I/O Initialize command, which places the 2800/4800 in STOP mode.
17	Loss of Digital Altitude Transducer RS-232 communications.
18	Stop Command received from Master unit. (Slave device only).
19	Slave unit loss of communications. (Slave device only)
98	Internal Failure contact Thermotron Product Support (Stack Overflow)
99	Internal Failure contact Thermotron Product Support (Watch Dog Time-out)

E. APPENDIX E – CONFIGURATION

E.1 GENERAL DESCRIPTION

Configuration data instructs the 2800/4800 to perform the required tasks for the chamber being controlled. The configuration data is usually hidden from the user. Therefore, a special procedure is used to allow entry to the configuration routine.

E.2 CONFIGURATION ENTRY

The configuration entry procedure is as follows:

1. Perform the Manual Reset Procedure listed in Appendix A.

2. While the 2800/4800 is in the Reset condition, press the **SETUP** key. The 2800/4800 alpha display shows:

   CONFIGURE

3. Press the hidden **X** key. The 2800/4800 alpha display shows:

   OPTIONS

4. Press the **ENT** key. The 2800/4800 alpha display shows:

   2800

   or

   4800

   depending on the current selection. The 2800/4800 is now ready to accept configuration data.

E.3 CONFIGURATION DATA

The configuration data may be obtained from the Configuration Sheet found in the Operator's Manual.

There are two methods of entering data in the configuration routines.

1. Toggle/Selection:

   When the 2800/4800 numeric display shows:

   ----

   it is using the toggle/selection method of data entry. The user presses the **CLR** key to toggle the data in the alpha display. When the desired data is shown in the alpha display, the user presses the **ENT** key to select that data.

2. Numeric Entry
   When the 2800.4800 numeric display shows numeric data, it is using the Numeric Entry method. The user will enter the required data using the numeric entry keys and must press the **ENT** key when the desired number is complete

F. APPENDIX F - ELECTRICAL NOISE AND IMMUNIZATION PROCEDURES

F.1 GENERAL DESCRIPTION

Electrical noise, commonly referred to as Electromagnetic Interference, (EMI), and Radio Frequency Interference, (RFI), consists of electro-magnetic induction and radiation which has the capability of causing interference with electronic circuitry. This interference will sometimes cause electronic equipment to malfunction. Failures related to EMI/RFI are often hard to identify, being of an intermittent and non-repeatable nature. It is very important to eliminate or minimize the sources of EMI/RFI, and/or to protect electronic equipment from their effects. The following procedures will assist the user in achieving this goal.

F.2 SOURCES OF EMI/RFI

The following list identifies some of the sources of EMI/RFI. Once the sources have been identified, the user may apply the necessary noise reduction techniques to minimize the noise at the source.

1. Electrical equipment such as; motors, contactors, and solenoids.

2. RFI generating equipment such as radio transmitters.

F.3 NOISE IMMUNIZATION PROCEDURES

The primary method of entry for EMI/RFI is thru electro-magnetic induction into the wires and cables connected to the electronic equipment. Once the EMI/RFI noise has been minimized, the next step is to prevent whatever is left from entering the circuitry. This may be achieved thru the following methods:

1. Location: The physical location of the cables determines the amount of the EMI/RFI inducted into those cables. Generally, the greater the distance between the electronic cables and the wiring containing the noise source, the lesser the effects on the electronics.

2. Shielding: All wires and cables must be shielded to minimize the induction of the noise into the cables. The shields must be terminated to earth ground on at least on end, and the termination method must not present a high impedance to high frequency energy. This is accomplished in part by making the shield drain wires as short as possible.

3. Ferrite Beads: These are used on the signal wires connected to the electronic circuitry to present an impedance 'bump' to high frequency noise induced in the wires. To be effective, the wire(s) should be passed thru the bead at least two times. NOTE: Do not pass the shield thru the ferrite bead.

A special consideration must be given to computer interface cables which connect to the 2800/4800. These cables often run outside the chamber control panel environment, and may be subject to increased levels of EMI/RFI. The user must ensure that these cablesare shielded, and the shield drains are terminated correctly. It has been our experience, that in the case of GPIB cables, those with full metal shell connectors provide a better shield than the plastic shell connector. Metal shell connector cables are recommended for use on the 2800/4800 system.

G. APPENDIX G 4800 COMMON COMPUTER I/O PROBLEMS AND QUESTIONS

G.1 GENERAL DESCRIPTION

The following problems and questions are commonly asked about implementation of the Computer I/O Option for the 4800. This section provides answers to these questions to assist the user in accomplishing the task of interfacing with the 4800. These questions and answers should be reviewed. Even though the user may not have the specific problem mentioned, they still provide valuable information.

These problems are divided into the following groups:

1. Not able to communicate at all.
2. Can send commands, but can not receive data.
3. Receives some data from the 4800, but it is wrong or garbled.
4. Can send and receive, but have problems with some specific commands.

It is recommended that the 4800 communications package be combined with the user application program in a mock-up system, before installation into the Host Computer. A mock-up system is defined as a dumb terminal. An example of a dumb terminal is a Terminal Emulation Program (RS-232 applications) or an "IBIC" program (GPIB applications). Using a mock-up allows the user to become familiar with the 4800 command syntax and data formats. It is also easier to troubleshoot any problems when operating in that mode.

4800 AND HOST COMPUTER DO NOT COMMUNICATE AT ALL

Often caused by improper interconnections or wiring. First, check the wiring and interconnections between the Host Computer and 4800. A breakout box or bus analyzer is the recommended testing device.

RS-232 *Check for proper line connections. Check for proper pin connections. Review the signal line descriptions for the 4800 and Host Computer.*

GPIB *Check that all cable connections are tight. Do not rule out a faulty cable.*

The second most common cause is invalid interface parameters. Check that the Host Computer and 4800 are using the same interface parameters. Refer to the Operator's Manual for the description and setting of the DIP switch on the Computer I/O Option Board. Remember, the 4800 must be reset before it will use the new switch settings. Reset the 4800 either through a Power Cycle or Manual Reset.

RS-232 *Check the settings of the baud, bits per character, parity, handshake etc.*

GPIB *Check the address selection. Remember, each instrument on the bus must have a unique address in the range of 0 to 30. When setting the address of the 4800, remember that the individual switches apply their weighted value when they are in the OFF position.*

4800 RECEIVES COMMANDS BUT DOES NOT TRANSMIT DATA

This problem indicates that the computer interface or handshake signal is improperly set up.

TERMINATOR

The most common problem related to this symptom is the 4800 and Host Computer are not using the same terminating character or sequence. Refer to the Operator's Manual for setting these signals. When the 4800 is receiving command strings, it uses any of the legal terminators to identify the end of a command string. Most computers are not as flexible when it comes to receiving data from the 4800. For this reason, the 4800 has selectable terminating characters or sequences. Ensure that the 4800 and Host Computer agree on the selected character.

HANDSHAKE PROBLEM

When using RS-232, lack of handshaking may cause a problem. The 4800 identifies a busy signal from the Host Computer and will not transmit data. Refer to the Operator's Manual for a description and setting for SW6. If resetting the switch does not solve the problem, disconnect the handshake input lines (pins 4 and 20) between the 4800 and the Host Computer. Set SW6 to ON (low handshaking polarity). This implies that the Host Computer is ready for data. The 4800 sends the requested data as soon as it receives the Dump command.

HOST COMPUTER RECEIVES SOME DATA FROM 4800, BUT IT IS WRONG OR GARBLED

Wrong or garbled data is commonly caused by improper use of command sequences or by entering the improper communication parameters.

BUFFER OUT OF SYNC

This problem usually results from the 4800 having excess data in its output buffer. This typically occurs when the computer does not read all the data it has asked for.

The problem is usually corrected by using the Clear Buffer (CB) command concatenated before every Dump command. This causes the 4800 to clear any characters in its output buffer. Once the buffer is clear, the data is loaded.

PARAMETER MISMATCH

This problem usually results from a mismatch in the RS-232 communication parameters such as baud or bit per character. It is recommended to check these parameters.

PROBLEMS WITH SPECIFIC COMMANDS

A useful aid in troubleshooting these types of problems is the error codes. Using the DEC common, these error codes are downloaded from the 4800 for user review.

If a Load command is not accepted, check the data sent with the command. Determine if the range of the data is acceptable to the 4800 for that command. For example, sending the command "L2S-10" is not acceptable because channel 2 is a Relative Humidity channel. Some Load commands require that data be sent as a decimal representation of a binary number. These include the Load Auxiliary command, Load SRQ Mask command etc. For example, to turn Auxiliary Outputs 1 and 3 on (binary 0101), the correct command is "LAX 5." Binary 0101 equals decimal 5. Similarly, some Dump commands send binary data that requires decoding to a decimal value

If the LPM and LPI commands cause problems, check to ensure that interval 0 is being sent. Also, when loading by value, the data fields are position dependent Commas are required to maintain correct position

H. APPENDIX H - BOARD REPLACEMENT PROCEDURES

H.1 GENERAL INSTRUCTIONS

Follow the procedures in this Appendix whenever replacing one of the boards in the 2800/4800 system. The following instructions apply to any board replacement.

1. Refer to the desired board replacement procedure for any preliminary instructions.
2. Remove power from the 2800/4800 system.
3. Identify the board being replaced.
4. Remove any boards mounted on top of the identified board. Mark and record the location of all wire and cable connectors.
5. Replace the identified board. Connect all wires and cables to their proper connectors.
6. Apply power to the 2800/4800 system.
7. Read and follow the special replacement instructions for the exchanged board. Refer to the figures found in the Functional Description section to locate any components referenced in the replacement instructions.

H.2 MAIN BOARD

The following special instructions apply to the replacement of the Main Board.

1. Before removing power from the 2800/4800 system, compare the configuration data found in the instruction manual with the data in the 2800/4800. If the data is not in the manual, record the configuration data on the sheet provided. See Appendix E.
2. Record the control parameters for the 2800/4800, found under the PARAM key.
3. Replace the Main Board following the steps under General Instructions above. Be sure to use a Main Board with the correct number of input channels, 1 or 2. A 2 channel unit may be used to replace a 1 channel unit. However, the thermocouple input for channel 2 must be jumpered at terminal block TB1.
4. Enter the Configuration mode, and check and update configuration data. See Appendix E.
5. Enter the control parameters recorded in step 2.
6. Check calibration of Thermocouple inputs, and calibrate as required. See Operator's Manual.
7. Calibrate all Analog Outputs. See Operator's Manual.
8. Check the position of jumper W1, (W3 on Version I Main Boards). This jumper should be in the STD position (pos 1) for all applications except when the 2800/4800 is used on Model SM-3.5-S/C. If used on this model, place the jumper in the LOCK position (pos 2). All other jumpers (if any) should be in the '1' position.

H.3 DISPLAY HEAD

The following special instructions apply to the replacement of the Display Head.

1. Replace Display Head.
2. Perform Display Test and Keyboard Test on new Display Head. See Appendix A.

H.4 4800 FUNCTION BOARD

The following special instructions apply to the replacement of the 4800 Function Board.

1. Refer to and follow the general instructions above.
2. When installing the replacement 4800 Function Board, ensure that the pins of connector J6 mate correctly with J4 on the Main Board.
3. Set jumpers W1 thru W4 in the same positions as the board being replaced.
4. Calibrate Analog Outputs #3 and #4. See the Operator's Manual.

H.5 MULTI-OPTION BOARD.

1. Refer to and follow the general instructions above.
2. Calibrate Analog Outputs #1 and #2. See the Operator's manual.
3. Set the Real Time Clock. See the Operator's Manual.

H.6 COMPUTER INTERFACE BOARD (GPIB OR RS-232)

The following special instructions apply to the replacement of the Computer Interface Board.

1. Refer to and follow the general instruction above.
2. Set switches 1 thru 8 on DIP switch SW1 identically to those on the board being replaced, or see the Operator's Manual for switch settings.

I APPENDIX I – ASSEMBLY COMPUTER NUMBERS

Assembly computer numbers change as the 2800/4800 is updated. The numbers that are valid for your version are shown on the boards.

Keep your Thermotron equipment at top efficiency with our preventive maintenance program.

Our environmental simulation equipment and systems are designed to provide many years of dependable service. But for maximum efficiency at all times, each system must be properly maintained and serviced.

Our field service engineers are always on hand to provide emergency service, but with a Preventive Maintenance Agreement, it will seldom be necessary. You'll see:

- Improved operation with the system properly adjusted and calibrated (NBS traceability can be provided).
- Reduced operating costs due to fewer "crisis" situations.
- Increased efficiency with maintenance performed according to your schedule.
- More accurate operating budgets: You'll know your yearly maintenance cost in advance.
- Improved use of funds with less of your money invested in spare parts inventory.
- Simplified administrative procedures — one purchase order keeps the agreement in force for a full year.

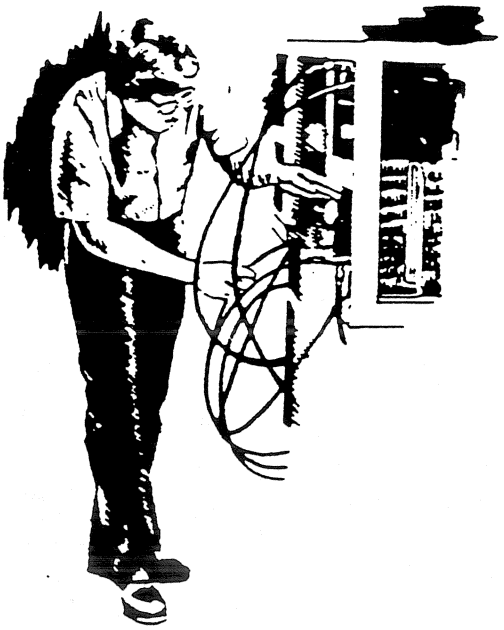

For further information about our Preventive Maintenance Agreement and how it can benefit the operation of your plant, call us — (616) 392-1491

THERMOTRON

A Venturedyne, Ltd., Company

4800 Programmer/Controller Computer Interface Manual

Interface Setup/Command Set/Troubleshooting

Revised November 11, 1994

For additional manuals, contact Thermotron Industries as follows:

Thermotron Industries
291 Kollen Park Drive
Holland, MI 49423, U.S.A.

Phone: (616) 392-1491 FAX: (616) 393-4549

Printed in U.S.A.

Table of Contents

TITLE PAGE

SECTION I
GENERAL DESCRIPTION

COMPUTER INTERFACE OPTION BOARD 1-1
COMPUTER INTERFACE SOFTWARE 1-1
Computer Interface Group Commands 1-1
Program Memory Commands 1-2
COMPUTER INTERFACE CONVENTIONS AND SYNTAX 1-2
General Notation Conventions 1-2
Command And Data Termination 1-3
RS-485 Interface Addressing Convention 1-5

SECTION II
4800 INTERFACE OPTION BOARD HARDWARE DESCRIPTION AND SETUP PROCEDURES

GPIB INTERFACE 2-1
GPIB Interface Functions 2-1
GPIB Hardware Considerations 2-3
GPIB Interface Diagnostic LED'S 2-3
Setting Up The GPIB Parameters 2-4
Output Terminator Selection 2-5
4800 RS-232 INTERFACE 2-6
RS-232 Serial Interface Lines 2-6
Handshake Considerations 2-6
Using The Diagnostic LED'S For The RS-232 Interface 2-7
Seting Up The RS-232 Interface Parameters 2-8
4800 RS-485 INTERFACE 2-10
RS-485 Serial Interface Lines 2-10
RS-485 Communication Protocol 2-11
Setting Up The RS-485 Interface Parameters 2-15

SECTION III
4800 GROUP COMMAND CODES

CONTROL GROUP COMMANDS 3-1
DUMP GROUP COMMANDS 3-3
Dump Data Formats 3-3
LOAD GROUP COMMANDS 3-8

Table of Contents (continued)

TITLE PAGE

SECTION IV
4800 PROGRAM MEMORY AND EDIT FROM HOLD COMMANDS

DUMPING TEMPERATURE PROFILES FROM 4800 TO COMPUTER 4-1
The Dump Program Memory Command 4-1
The Dump Program Interval Command 4-2
LOADING TEMPERATURE PROFILES FROM COMPUTER TO 4800 4-3
Loading From Program Memory 4-3
The Load Program By Value Commands 4-4
EDIT FROM HOLD COMMANDS 4-7
Program Testing From Hold 4-8
Dummy Program Testing Using Single Step 4-8

SECTION V
INTERPRETING THE DATA SENT BY THE 4800

CONVERTING THE DATA 5-1
INTERPRETING THE DATA BYTES 5-1
Interpreting The Status Byte 5-2
Interpreting The Alarm Status 5-3
Interpreting The Configuration Byte 5-4
Interpreting The SRQ Byte 5-5
Using The SRQ Mask 5-6
Interpreting And Using The Auxiliary Output Byte 5-7
Interpreting The System Monitor Status Byte 5-8
USING THE ERROR CODES 5-9
Interpreting The Error Code(s) 5-9

SECTION VI
4800 COMMAND EXAMPLES

EXAMPLES USING THE HP-85 COMPUTER 6-1
Example #1 (HP-85) 6-1
Example #2 (HP-85) 6-2
EXAMPLE USING A PC COMPATIBLE AND THE NATIONAL INSTRUMENTS GPIB ADAPTER CARD. 6-3
Example #3 (PC + National Inst. GPIB) 6-3
EXAMPLE USING A PC COMPATIBLE AND THE COM1 RS-232 SERIAL INTERFACE PORT 6-4
Example #4 (PC Using COM1 Serial Port) 6-5

Table of Contents (continued)

TITLE PAGE

SECTION VII
4800 COMMON COMPUTER I/O PROBLEMS AND QUESTIONS

NOT ABLE TO COMMUNICATE AT ALL 7-1
CAN SEND COMMANDS, BUT CAN'T GET DATA 7-2
Terminator Problem 7-2
Handshake Problem 7-2
GET SOME DATA FROM 4800, WRONG OR GARBLED 7-2
Buffer Out Of Synch 7-2
Parameter Mismatch 7-2
Problems With Specific Commands 7-3

SECTION I
GENERAL DESCRIPTION

This section provides a general description of the 4800 interface options. First, the interface option boards are described. Next, a general description of the interface software is provided. Finally, the general conventions and syntax of the computer interface is described.

COMPUTER INTERFACE OPTION BOARD

The 4800 Computer Interface board is used to interface the 4800 Programmer/ Controller with a Host Computer. Using the interface board, a Host Computer can perform the following:

- Control the 4800 operations
- Transmit and receive temperature profiles to and from the 4800
- Receive status information from the 4800

The following two interface boards are available:

- IEEE-488 STANDARD (GPIB) Parallel Interface Board
- RS-232 STANDARD Serial Interface Board (With RS-485 Interface Option)

Each board uses the same set of command words and data values to communicate with the 4800. Only the interface parameters required by the interface standard are different.

COMPUTER INTERFACE SOFTWARE

The 4800 interface software is used to control the interface and to transfer data between the Host Computer and the 4800. The software description consists of Group commands and Program Memory commands.

COMPUTER INTERFACE GROUP COMMANDS

The Host Computer uses pre-defined Group commands to control the operation of the 4800 and to communicate with the 4800. The commands accepted by the 4800 are split into three groups:

- Control Group
- Dump Group
- Load Group

Control Group commands are used by the Host Computer to control the 4800 operating mode, or to command the 4800 to perform a special function. *Dump Group* commands cause the 4800 to transmit data values and status bytes to the Host Computer. *Load Group* commands are used by the Host Computer to transmit data values and parameters to the 4800.

PROGRAM MEMORY COMMANDS

The 4800 Program Memory commands are a special set of Dump and Load commands. They are used by the Host Computer to:

- transmit or receive temperature profiles to and from the 4800,
- transmit temperature profiles from one instrument to another instrument of the same type,
- and to save tests in the Host Computer's memory for archiving purposes.

These commands are first defined in the Group Command section, and then are further applied in the Program Memory Commands section.

COMPUTER INTERFACE CONVENTIONS AND SYNTAX

To use the 4800 interface, certain rules must be followed. All commands and communication data will use the uppercase ASCII characters, numerals, punctuation and control codes described below in this section. First, the general notation conventions are defined. Finally, the command and data termination conventions are described.

GENERAL NOTATION CONVENTIONS

In order to understand the programming examples in this manual, the user must understand the general notation conventions. The notation conventions in Table 1-1 are used when describing the 4800 command structure and syntax.

Table 1-1. Notation Conventions.

SYMBOL	DEFINITION
[ ]	**Square Brackets:** used to indicate that the character(s) within the brackets are optional. Do not send the square brackets with any command
<t>	**Terminator:** used to indicate that one of the legal terminating character sequence(s) must be sent. Substitute the selected terminating character for the symbol. Do not send any part of the symbol.
#	**Channel Number or RS-485 Multidrop Address:** used to indicate that a channel number is to be sent embedded in the command mnemonic. Replace the # with the selected channel. *DO NOT* send the symbol. The symbol *IS* sent with an RS-485 command. The # and the Multidrop address precedes each command when the RS-485 interface is used.
x	**Dummy Variable:** used to indicate that the data may have to be sent with the command mnemonic. This "x" is a lower case character and could appear as any lower case character. Do not send a lower case symbol.

COMMAND AND DATA TERMINATION

The 4800 requires that a terminating character or terminating sequence be sent at the end of every command. Without the termination, the 4800 is unable to determine when to process the incoming data. Additionally, the 4800 will send a terminating character or sequence at the end of all requested data value transmissions. The acceptable terminating conventions are described below.

Command Input Termination

The 4800 accepts a variety of terminators from the Host Computer. The allowable terminators for input to the 4800 are:

- ASCII Carriage Return (<cr>, character code 13)
- Line Feed (<lf>, character code 10)
- End Or Identify (EOI) signal (GPIB only)

These terminators may be sent alone, or in any sequence, with the restriction that the EOI signal, when used, is sent synchronous with the last character. For example, the Run Manual command may be sent as follows:

RM<cr,lf>

The terminating sequence of <cr,lf> will cause the 4800 to execute the command

Input Command Concatenation

Multiple commands may be sent to the 4800 concatenated (or chained) on the same command string. To concatenate commands, separate them using a semicolon (;). The commands are processed by the 4800 in the order received. For example, the Run Manual command in the previous example may be sent along with a Stop command and a Dump Channel #1 command as follows:

S;RM;D1V<t>

This command string will place the 4800 in stop, execute the Run Manual command and then send the current value of the channel 1 variable to the Host Computer.

NOTE
When multiple Dump Group commands are sent on the same command line, the data sent by the 4800 will be separated by the specified data output terminator.

Data Output Termination

The 4800 will send one of the terminating sequences at the end of every data value. The user may select the active output termination sequence using a Parameter Selection switch or Load Output Terminator command. These methods are described below:

The *Parameter Selection switch* is located on the Computer Interface Option board. This switch is a eight position dip switch. Positions 8, 7 and 6 are used to determine the output terminator. Table 1-2 shows the switch settings for selecting the terminator(s).

Table 1-2. Data Output Terminator Parameter Switch Settings.

SWITCH POSITION				TERMINATOR SELECTION
RS-232/ RS-485	GPIB			
8	8	7	6	
	ON	ON	ON	**LAST INPUT TERM** This selection will cause the 4800 to terminate all data outputs with one of the following terminating sequences which most closely resembles the last one received.
	ON	ON	OFF	**EOI** (GPIB only) This selection will cause the 4800 to send the EOI signal with the last character of the data value.
OFF	ON	OFF	ON	**<CR> ONLY** Data values will be terminated with an ASCII Carriage Return (Character code 13)
	ON	OFF	OFF	**<CR> + EOI** (GPIB only) Data values will be terminated with a Carriage Return and the EOI line.
	OFF	ON	ON	**<LF> ONLY** Data values will be terminated with an ASCII Line Feed (Character code 10).
	OFF	ON	OFF	**<LF> + EOI** (GPIB only) Data values will be terminated with a Line Feed and the EOI line.
ON	OFF	OFF	ON	**<CR> + <LF>** Data will be terminated with both the Carriage Return and Line Feed Characters.
	OFF	OFF	OFF	**<CR> + <LF> + EOI** (GPIB only) Data will be terminated with both the Carriage Return character, Line Feed character and the EOI line.

The *Load Output Terminator* (LOT) command may be used to select the desired terminator. When used, LOT overrides the switch settings. The ASCII character sent with the command identifies the terminating sequence as shown below:

Value	Terminator
0	Last Input terminator
1	EOI only (GPIB only)
2	<cr> only
3	<cr> + EOI (GPIB only)
4	<lf> only
5	<lf> + EOI (GPIB only)
6	<cr> + <lf>
7	<cr> + <lf> +EOI (GPIB only)

The LOT command terminator selection is only used until the 4800 is re-initialized to the switch settings using the I command (GPIB Clear command) or a Power-On Reset.

RS-485 INTERFACE ADDRESSING CONVENTION

When using the RS-485 option on the RS-232 option board, up to 127 devices can be addressed on the interface. To address 127 devices, the RS-485 uses the following addressing scheme:

#a[Command]<t> or **#a[Command][Data]<t>**

Every transmission from the host computer is started with the ASCII character # followed with an ASCII addressing character:

- The 4800 ignores all data until it reads a pound sign.
- The ASCII addressing character is interpreted by its decimal equivalent (e.g. ASCII character H = address 72).

The following command and data is transmitted on the RS-485. Only the instrument with the addressing character's interface address receives the transmitted data.As an example, the 4800 at address 77 is commanded run program number 2 starting at interval 10:

#MRP2,10<t>

The above example uses ASCII character M for address 77 after the pound sign, followed by the proper Run Program (RPp,[,i]) command.

Starting with version V2.01.09, the 4800 has a special Prefix protocol that can be enabled and disabled. The advantage of the Prefix protocol is that it helps eliminate problems that occur on the RS-485 bus as the bus drivers go active. During this point in time, part of the first data word can be missed by the receivers. The [FF] is a "dummy" character that is ignored by the 4800. After the "dummy" character, the 4800 is ready to input the data that is present on the interface lines. The 4800 then reads the data that is sent immediately after the [FF] "dummy" character.

The Prefix protocol forces the host computer to send a "dummy" character (FF hexadecimal, shown as [FF]) in front of every command. The format is shown below:

[FF][Command]<t> or **[FF][Command][Data]<t>**

Thermotron recommends that you use prefix protocol and multidrop addressing. When you enable both of these selections, *all* transmissions between the host computer and 4800 must use prefix protocol and multi-drop addressing to provide the most error-free communication.

For example,the host computer sends a Dump Final Value command for Channel 2 to the 4800 at address 77.

[FF]#MD2F<t>

All the Thermotron instruments ignore the first character and then wait for the pound sign. Once it reads the pound sign, the 4800 at address 77 reads the command word and data. The 4800 responds with an final value of +124.0.

[FF]#M+124.0<t>

See *RS-485 Communication Protocol* in Section 2 for a detailed explanation of the two protocols.

SECTION II
4800 INTERFACE OPTION BOARD HARDWARE DESCRIPTION AND SETUP PROCEDURES

This section describes the hardware interface. The GPIB and RS-232 interface boards are described separately. In addition, the RS-485 application of the RS-232 interface board is described. Each interface description consists of the following:

- General Interface descriptions
- Special Considerations
- LED Diagnostic Display (Except RS-485)
- Interface Parameters Setup

GPIB INTERFACE

The GPIB Interface option for the 4800 is a parallel interface which complies with the **IEEE-488, 1978 Specification** for an instrumentation interface. In addition, the 4800 follows the **IEEE-728 Recommendations** for command syntax, number formats, and data representations. See the IEEE-488 and IEEE-728 for more information about these specifications.

The following paragraphs describe the GPIB interface functions, hardware considerations, and diagnostic display.

GPIB INTERFACE FUNCTIONS

The GPIB interface functions provide the communication protocol between the instruments. The interface functions which are defined by the IEEE-488, as implemented by the 4800 are as follows:

SH1	Source Handshake
AH1	Acceptor Handshake
T6	Talker function 6
TEO	Extended Talker 0 (not implemented)
L4	Listener function 4
LEO	Extended Listener 0 (not implemented)
SR1	Service Request
RL1	Remote/Local, with local lockout
PPO	Parallel Poll 0 (not implemented)
DC1	Device Clear
DT1	Group Execute Trigger
CO	Controller 0 (not implemented)

Some of these functions are described below.

Talker Function

When the 4800 receives a Dump command, it immediately retrieves the data associated with that command and loads it in the output buffer. This buffer is over 100 characters long, and capable of holding multiple data values at the same time. When the 4800 is addressed to Talk and there is an active listener, it will start to output the data from the buffer to the bus. Normally, the buffer will shift each character out until the buffer is empty. The last character in the buffer should be the selected terminating character or sequence which completes the data entry mode for the listener. If the 4800 is addressed to talk and the output buffer is empty, it will retrieve new data associated with the last dump command it received. The new data will be placed in the buffer. In this way, the 4800 should never tie up the bus for lack of data to send.

Care should be taken that the Talker function not be inadvertently used because the listener did not terminate input with the terminating sequence. This problem will cause the Host Computer to continue to request data after the 4800 has transmitted the character string. The 4800 will try to accommodate the listener by getting new data for the last dump command and placing this in the buffer.

One method to ensure the data read is for the dump command just sent is to use the **Clear Buffer** command. This command may be concatenated on the command line before the dump command. The Clear Buffer command will cause the 4800 to clear the buffer before processing the new dump command. For example, the command **CB;D1V** will ensure that the only data in the buffer is the chamber temperature.

Service Request Function

The **SRQ Mask** byte is used to determine which events are allowed to activate the GPIB SRQ line. The 4800 will send its SRQ status byte in response to the GPIB Serial Poll function.

Remote/Local Function

The 4800 responds to the GPIB **Remote** function by locking the keyboard which locks up all the function keys. (This has the same function as the LOCK function in the 4800 Operator's manual.) When locked in this manner, the 4800 may be returned to local operation by the GPIB local command or by the operator manually entering the unlock sequence.

The 4800 responds to the GPIB **Local Lockout** command by disabling the operator from the unlock sequence described above. (Note that the Load Keyboard Status **[LKS]** command performs a Local Lockout on the GPIB.) If the Host Computer hangs up when the 4800 is in Local Lockout, local control can be restored by pressing the **CLR** and **STOP** keys simultaneously or by cycling power to the 4800 off and then on.

Device Clear Function

The 4800 will respond to the Device Clear command by forcing itself to do a hardware reset. The function takes approximately 3 to 5 seconds to complete. No communications should be attempted during this period. This is the same as if the 4800 had received an Initialize command.

Group Execute Trigger Function

The 4800 will respond to the Group Execute Trigger command by trying to Run Program #1 at interval #1. The 4800 must be in the **STOP** mode and the program must exist or an error will be generated.

GPIB HARDWARE CONSIDERATIONS

The GPIB interface for the 4800 is fully compatible with the IEEE-488 (1978) hardware specification. See the specification for more information about the GPIB interface.

The 4800 GPIB option board provides the D connector as specified in the IEEE-488. An optional extension cable may be included which may provide a feed through the instrument panel or compartment.

The user should provide a standard GPIB cable for connecting to the 4800. This cable must be shielded, and it is recommended that it also have a full metal shell surrounding the connector. This will provide the maximum electrical noise protection for the 4800, and other instruments connected on the bus.

GPIB INTERFACE DIAGNOSTIC LED'S

The GPIB option board contains an array of LED's which are used to display the current status of the interface. These LED's may be used to aid the user in the operation of the interface. The purpose of each LED is explained in Table 2-1.

Table 2-1. GPIB LED Display Description.

LED	NAME	DESCRIPTION
CTS	Clear to Send	Serial Handshake line (input) (RS-232 only)
DSR	Data Set Ready	Serial Handshake line (input) (RS-232 only)
RDY	Ready	4800's ready/busy status (RS-232 only)
XMT	Transmit	This LED will be lit whenever the 4800 is sending data. It will come on when the first character is sent, and go out after the last character has been sent.
REC	Receive	This LED will be lit whenever the 4800 is receiving data from the host computer. It will come on when the 4800 receives the first character, and go out when a terminator is received.
SRQ	Service Request	The 4800 is requesting service from the host computer. This implies that an event has occurred which has been enabled in the SRQ mask. The 4800 has activated the GPIB 'SRQ' line.
LOC	Local	The 4800 is in the local mode.
REM	Remote	The 4800 is in the **Remote** state, preventing local use. This LED will also be lit if the 4800 is in the *Local Lockout* state. The GPIB LOCAL command will return the 4800 to the local mode. (The I command or the Master Reset will also return the keyboard to Local mode.) The interface may be used in either the local or remote modes.
TLK	Talk	The 4800 has been addressed to talk. It will remain in the talk mode until it receives the Un-Talk command, or it is addressed to listen.
LSN	Listen	The 4800 is addressed to listen. It will remain in the listen mode until it receives the Un-Listen command, or it is addressed to talk.

SETTING UP THE GPIB PARAMETERS

Before the GPIB interface can be used, the 4800 must be instructed to use the correct interface parameters. This is done by setting the 8-position DIP switch located on the computer interface option board. This switch is referred to as SW1.

Note that the 4800 only reads these switch settings at power up or after a manual reset (**CLEAR + STOP**). If the address is not changed, you can also send an initialize command from the interface, such as the GPIB CLEAR command. Therefore, one of these must occur after changing the settings of SW1. Usually, it is easiest to perform the manual reset by pressing the **CLEAR + STOP** keys simultaneously. Switch SW1 is used to select:

- the 4800's GPIB interface talk/listen address,
- and the output terminating sequence to be used by the 4800 to end all data value outputs and identify the end of a command sent by the host computer.

The address and terminator selections are described below. Table 2-2 provides a quick reference of the switch settings.

Table 2-2. GPIB Parameter Switch Quick Reference.

SWITCH NUMBER	NAME	ON FUNCTION	OFF FUNCTION	COMMENTS
8	Line Feed Terminator	Line Feed Not Included	Line Feed Included	When both Carriage Return and Line Feed are selected, the sequence will be <cr><lf>.
7	Carriage Return Terminator	Carriage Return Not Included	Carriage Return Included	If all switches (6,7 & 8) are ON, 4800 will use the last input's terminating string.
6	EOI Terminator	NoEOI with Last Byte	EOI synchronous with Last Byte	
5	Address Bit 4	Value = 0	Value = 16	Legal GPIB addresses are 0 thru 30.
4	Address Bit 3	Value = 0	Value = 8	
3	Address Bit 2	Value = 0	Value = 4	
2	Address Bit 1	Value = 0	Value = 2	
1	Address Bit 0	Value = 0	Value = 1	

EXAMPLE: Switch Positions ⇒ 1 2 3 4 5 6 7 8
State ⇒ ON OFF ON OFF ON OFF ON OFF
Address = 10 Terminator = <lf> + EOI

Address Selection

To select the address to be recognized by the 4800 on the GPIB, use switch positions 1 thru 5 of SW1. Each switch is binary weighted as follows:

Switch Position	Weighting (Off position)
1	1
2	2
3	4
4	8
5	16

Set the individual switches off as required to select the desired address. Valid address settings are from 0 to 30. Setting switch positions 1 thru 5 in the OFF position is not valid.

Note that each instrument or device on the bus must have a unique address in order for the bus to function correctly.

OUTPUT TERMINATOR SELECTION

Switch numbers 6, 7, and 8 of DIP switch SW1 are used to select the output terminating sequence used by the 4800. These switches are described below:

Switch 6 Selects the GPIB EOI signal. When this switch is off, the EOI line will be set active synchronously with the last character transmitted.

Switch 7 Selects ASCII carriage return. When this switch is in the off position the 4800 will send the carriage return (ASCII code 13) as part of the terminatings equence.

Switch 8 Selects ASCII line feed. When this switch is in the off position the 4800 will send the line feed (ASCII code 10) as part of the terminating sequence.

Note that when switches 6, 7 and 8 are all ON, the 4800 will use the last input terminator received as its output terminator. See the section on data output termination for more information.

4800 RS-232 INTERFACE

The RS-232 interface option for the 4800 provides a serial communications interface from a host computer to the 4800. The 4800 RS-232 option board contains a female 25 pin connector. An optional extension cable may be included which may provide a feed through the instrument panel or compartment. The option board also has an LED display used to aid the user during operations. The following paragraphs describe the serial interface lines, handshake considerations, LED diagnostic display, and the parameters setup procedure.

The user should provide a standard RS-232 cable for connecting to the 4800. This cable must be shielded, and it is recommended that it also have a full metal shell surrounding the connector. This will provide the maximum electrical noise protection for the 4800.

RS-232 SERIAL INTERFACE LINES

This serial interface uses a transmit data line, a receive data line, a signal return line, and some optional handshake lines. The lines used by the 4800 are described as follows:

Line	Description
1	**Shield**
2	**TxD** - The 4800 receives data on this signal line.
3	**RxD** - The 4800 sends data on this signal line.
4	**RTS** - This is a possible handshake input line. The 4800 will monitor this line while sending data to the computer.
5	**CTS** - This is a handshake output line. The 4800 will indicate its ready/busy status on this line.
6	**DSR** - This is a handshake output line exactly like CTS above.
7	**Signal Common** - This is the signal return line.
8 thru 19	Not Used. (Lines14 and 16 are reserved.)
20	**DTR** - This is a possible handshake input line exactly like RTS above.
21 thru 25	Not Used.

HANDSHAKE CONSIDERATIONS

The 4800 uses some of the lines to provide handshaking if this is required. Handshaking may be required if the computer is not able to receive data from the 4800 at all times. The handshake lines may be used to delay data transmission until the computer is ready, as indicated by its ready/busy signal which is input to the 4800.

The 4800 will also provide an indication of whether it is ready to receive data from the computer. The computer can monitor one of the 4800's handshake output lines to determine if it is ready to receive data. The parameter selection switch is used to select the handshake input line to be monitored by the 4800. This can be either the RTS line (sw5 on), or the DTR line (sw5 off). The busy polarity may also be selected to be either busy low (sw6 on), or busy high (sw6 off).

Handshaking is not always required by the computer. When it is not required, the RTS and DTR lines should be left unconnected, and the handshake polarity should be selected as busy low (sw6)

on). This indicates to the 4800 that the computer is always ready to receive data, which in many instances is the case.

The 4800 may require the computer to monitor the handshake output line, either the CTS line or the DSR line. The 4800 will use the busy polarity selected by sw6 to indicate whether or not it is ready to receive data.

If no handshaking is desired, it may be necessary to provide a small time delay (less that 10 mS) between commands transmitted to the 4800.

USING THE DIAGNOSTIC LED'S FOR THE RS-232 INTERFACE

The RS-232 option board contains an array of LED's which are used to display the current status of the interface. These LED's may be used to aid the user in the operation of the interface. The purpose of each LED is described in Table 2-3.

Table 2-3. RS-232 LED Display Description.

LED	NAME	DESCRIPTION
CTS	Clear to Send	Serial Handshake input line. If the indicator is lit, the CTS line is in the High state.
DSR	Data Set Ready	Serial Handshake input line. If the indicator is lit, the DSR line is in the High state.
RDY	Ready	4800's ready/busy status. If the indicator is lit, the 4800 is ready to receive data.
XMT	Transmit	This LED will be lit whenever the 4800 is sending data. It will come on when the first character is sent, and go out after the last character has been sent.
REC	Receive	This LED will be lit whenever the 4800 is receiving data from the GPIB. It will come on when the 4800 receives the first character, and go out when a terminator is received.
SRQ	Service Request	The 4800 is requesting service from the host computer. This implies that an event has occurred which has been enabled in the SRQ mask.
LOC	Local	The 4800 is in the local mode. The keyboard has not been locked using the LKS command.
REM	Remote	The 4800 is in the Remote state, preventing local use. The keyboard has been locked using the LKS command. The user may unlock the keyboard using the LKS0 or I command, or by a Manual Reset.
TLK	Talk	(GPIB only)
LSN	Listen	(GPIB only)

SET TING UP THE RS-232 /RS-485 INTERFACE PARAMETERS

Before the RS-232 interface can be used, the 4800 must be instructed to use the correct interface parameters. This is done by setting the 8-position DIP switch located on the computer interface option board. This switch is referred to as SW1.

Note that the 4800 only reads these switch settings at power up, after a manual reset (**CLEAR + STOP**), or after an initialize command from the interface. Therefore, one of these must occur after changing the settings of SW1. Usually, it is easiest to perform the manual reset by pressing the **CLEAR + STOP** keys simultaneously. This will cause the 4800 to re-initialize itself, including the reading of the interface parameter switch SW1.

The RS-232 interface option board uses SW1 to set all of the interface parameters. The parameters are; Baud, Parity, Handshake line, Handshake polarity, Word Length, and Output terminating sequence. Table 2-4 provides a quick reference for the SW1 switch settings. Each parameter is described below.

Table 2-4. RS-232/RS-485 Parameter Switch Quick Reference.

SWITCH POSITION	NAME	ON FUNCTION	OFF FUNCTION	COMMENTS
8	Terminator	Use Carriage Return & Line feed	Use Carriage Return Only	Select Output Terminator
7	Word Length	Select 8 bits per character	Select 7 bits per character	Select Word length. Select 8 bits for RS-485.
6	Handshake Polarity	Negative Busy	Positive Busy	Select Handshake Polarity. Use Negative polarity for No Handshake. Select Negative Busy for RS-485.
5	Handshake Line	**RTS/CTS**	**DTR/DSR**	Select Input Handshake Line to be monitored by the 4800. Not used by RS-485 Interface.
4	Parity Type	Odd Parity	Even Parity	Select Parity type (Position 3 = OFF)
3	Parity Select	No Parity	Use Selected Parity Type	Enable/Disable Parity. Select No Parity for RS-485.
2	BAUD Rate select Position 2	POS. 2 / POS. 1 / BAUD SELECTION: ON ON 9600; ON OFF 2400; OFF ON 1200; OFF OFF 300		Use Positions 1 & 2 to select BAUD rate
1	BAUD Rate select Position 1			

EXAMPLE:

Switch Positions ⇒	1 2	3 4	5 6	7	8
State ⇒	ON OFF	OFF ON	OFF ON	ON	OFF
	1200 BAUD	Odd Parity	DTR Negative	8 Bits	<cr> Only

Baud selection

Switch positions 1 and 2 are used to select the bit rate or baud to be used by the 4800. Use the following table to select the desired baud.

POS. 2	POS. 1	BAUD SELECTION
ON	ON	9600
ON	OFF	2400
OFF	ON	1200
OFF	OFF	300

Parity Selection

Switch positions 3 and 4 are used to select the parity to be used by the 4800. Use the following table to select the desired parity.

POS. 4	POS 3	PARITY SELECTION
ON	ON	NO PARITY
ON	OFF	ODD PARITY
OFF	OFF	EVEN PARITY

Handshake Selection

Switch positions 5 and6 are used to select the handshake line and polarity to be used by the 4800.

- Switch position 5 in the ON position selects that the RTS/CTS combination , switch position5 in the OFF position selects the DTR/DSR combination.
- Switch position 6 selects the handshake polarity to be used by the 4800. In the ON position, negative busy will be used, whereas the OFF position will select positive busy. Switch position 6 is also set ON for no handshake.

Word Length Selection

Switch position 7 will select the desired word length to be used by the 4800.

- In the ON position, switch position 7 selects 8 bits per character
- In the OFF position, switch position selects 7 bits/character.

Output Terminator Selection

Switch position 8 selects the data output terminating sequence to be used by the 4800 whenever it sends data.

- With switch position 8 in the ON position, the 4800 will send both an ASCII carriage Return (code 13 decimal), and the ASCII line feed (code 10 decimal).
- If switch position 8 is in the OFF position, the 4800 will send the carriage return only.

4800 RS-485 INTERFACE

The RS-485 interface option for the 4800 provides a 2-wire differential serial communications between the host computer and the 4800 and with up to 31 other instruments. This is referred to as multidrop addressing. The cables are daisy-chained from one instrument to the next. The 4800 RS-232 option board contains a female 25 pin connector. An extension cable is included that provides a feed through the instrument panel or compartment. The following paragraphs describe the serial interface lines, addressing considerations, and the parameters setup procedure.

You should provide a standard RS-485 3-wire cable to connect to the 4800. This cable must be shielded, and it is recommended that it also have a full metal shell surrounding the connector. This will provide the maximum electrical noise protection for the 4800, and other instruments connected on the bus.

RS-485 SERIAL INTERFACE LINES

The RS-485 interface uses 2-wire differential communication lines and a signal common. The data is transmitted and received on the communication lines. The Signal (+) line uses +5 volts for a 1 and 0 Volts for a 0 during data communications. The Signal (-) line uses 0 volts for a 1 and +5 Volts for a 0. The lines used by the 4800 are described as follows:

Line	Description
1	**Shield**
2 thru 6	Reserved
7	**Signal Common** - This is the signal return line.
8 thru 13	Not Used.
14	**Signal (+)** - This is the positive communication line. Positive logic data is transmitted and received on this line.
15	Not Used
16	**Signal (-)** - This is the negative communication line. Negative logic data is transmitted and received on this line.
17 thru 25	Not Used. (Line 20 is reserved.)

RS-485 COMMUNICATION PROTOCOL

The RS-485 interface configuration can add two kinds of communication protocol to the basic command word:

- *RS-485 Address* allows you to select multi-drop addressing. This protocol adds an address prefix to your command to allow your host computer to communicate with more than one instrument.
- Starting with version V2.01.09, *Send Prefix?* allows you to enable the prefix protocol. The prefix protocal requires that you place an additional character (FF hexadecimal, shown as [FF]) in front of each command and in front of each data transmission using Prefix Protocol and Multi-drop Addressing.

These protocol options are listed in Table 2-5 on page 2-12 and explained in the following paragraphs.

Basic Command Syntax

The basic command syntax does not include multi-drop addressing or prefix protocol:

CMND<t> or **CMND<data><t>**

Where:

CMND = Command word

<data> = Data sent with the command

<t> = Selected terminator

The 4800 responds using the following syntax:

<data><t>

As an example, the following command and data is transmitted on the RS-485:.

RP2,10<t>

This **RPp,i** command tells the 4800 to run program two, starting at interval ten.

As another example,the host computer sends a Dump Initial Value command for Channel 2 to the 4800:

D2IV<t>

The 4800 responds with a Channel 2 initial value of -64.0:

-064.0<t>

Table 2-5. RS-485 Command Syntax for Protocol Selections.

Address Selection	Prefix Protocol?	Receive Data Syntax	Transmit Data Syntax
Zero (0)	NO	CMND<t>	<data><t>
Zero (0)	YES	[FF]CMND<t>	<data><t>
(1...127)	NO	#aCMND<t>	<data><t>
(1...127)*	YES*	[FF]#aCMND<t>	[FF]#a<data><t>
*Thermotron recommends that you use multi-drop addressing *and* Prefix Protocol.			

Prefix Protocol Without Multi-drop Addressing

The Prefix Protocol places an additional character (FF hexadecimal, shown as [FF]) in front of each command. The advantage of the Prefix protocol is that it helps eliminate problems that occur on the RS-485 bus as the bus drivers go active. During this point in time, part of the first data word can be missed by the receivers. The [FF] is a "dummy" character that is ignored by the 4800. After the "dummy" character, the 4800 is ready to input the data that is present on the interface lines. The 4800 then reads the data that is sent immediately after the [FF] "dummy" character.

Although the [FF] is a "dummy" character that is discarded by the 4800 and your computer, it provides two advantages to this interface:

1. It provides the necessary character space to allow the receivers to become fully active.
2. FF hexadecimal is transmitted as all 1's, keeping the interface in a driven state.

Therefore, Thermotron recommends that you use [FF] as the "dummy" character.

Use the following syntax for operation commands using the Prefix Protocol without Multi-drop Addressing:

[FF]CMND<data><t> **or** **[FF]CMND<t>**

Where:

[FF] = Prefix "dummy" character (code FF hexadecimal)

a = One byte address of the 4800 (1...127)

CMND = Command word

<data> = Data sent with the command

<t> = Selected terminator

Following a Dump command, the 4800 responds using the following syntax:

<data><t>

As an example, the following RPp,i command and data is transmitted on the RS-485:.

[FF]RP2,10<t>

The 4800 ignores the first character and then reads the **RPp,i** command. The 4800 responds by running program two, starting at interval ten.

As another example,the host computer sends a Dump Initial Value command for Channel 2 to the 4800:

[FF]D2IV<t>

The 4800 ignores the first data word and then reads the comand word. The 4800 responds with a Channel 2 initial value of -64.0:

-064.0<t>

Multi-Drop Addressing Without Prefix Protocol

When the 4800 operates in a multidrop system (address not equal 0), the multi-drop addressing protocol must be added to each command sent by the host computer. The multi-drop addressing protocol allows your host computer to address a particular 4800 or other instrument on the network.

Use the following syntax for Multi-drop commands without Prefix Protocol:

#aCMND<t> or **#aCMND<data><t>**

Where:

= ASCII pound sign (code 35 decimal)

a = One byte address of 4800 (1. . .127)

CMND = Command word

<data> = Data sent with the command

<t> = Selected terminator

The 4800 responds using the following syntax:

<data><t>

For example, the following command and data is transmitted on the RS-485 interface:

#MRP2,10<t>

This **RPp,i** command tells the 4800 at address 77 to run program two, starting at interval ten.

All the Thermotron instruments on the in the RS-485 interface data wait for the pound sign (code 35 decimal) before interpreting any data. Upon receiving the pound sign, each instrument checks the address word. Finally, only the instrument at address 77 receives the transmitted data.

As another example,the host computer sends a Dump Initial Value command for Channel 2 to the 4800 at address 77:

#MD2IV<t>

All the Thermotron instruments wait for the pound sign before reading the address. Only the 4800 at address 77 reads the command, and it responds with a Channel 2 initial value of -64.0:

-064.0<t>

Prefix Protocol With Multi-drop Addressing

This is the protocol recommended by Thermotron, because it combines the two interface features when transmitting *and* receiving commands or data:

1. The Prefix Protocol places an additional character (FF hexadecimal, shown as [FF]) in front of each command and data word. The advantage of the Prefix protocol is that it helps eliminate problems that occur on the RS-485 bus as the bus drivers go active. During this point in time, part of the first data word can be missed by the receivers. The [FF] is a "dummy"caracter that is ignored by the 4800 and by your host computer. After the "dummy" character, the 4800 or host computer is ready to input the data that is present on the interface lines.
2. The multi-drop addressing protocol makes sure that the data is sent to and received from the correct instrument. Once the 4800 or your computer has discarded the "dummy" data word, it waits until it reads the pound sign (code 35) on the interface. The 4800 or your computer then reads the address character:
   - If your computer is transmitting the data, the 4800 checks the address character. If it matches the 4800 multidrop address, the 4800 then reads the command that follows the address character.
   - If 4800 is transmitting the data, your computer reads the address character to see which instrument is sending the data, and then reads the data that follows the address character.

Note that the [FF] is a "dummy" character that is discarded by the 4800 and your computer. However, it provides three advantages to this interface:

1. It provides the necessarry character space to allow the receivers to become fully active.
2. FF hexadecimal is transmitted as all 1's, keeping the interface in a driven state.
3. FF hexadecimal is very unlikely to be interpreted as a pound sign (code 35 decimal).

Therefore, Thermotron recommends that you use [FF] as the "dummy"character.

Use the following syntax for commands using the Prefix Protocol with Multi-drop Addressing:

[FF]#aCMND<t> or **[FF]#aCMND<data><t>**

Where:

[FF] = Prefix "dummy" character (code FF hexadecimal)

= ASCII pound sign (code 35 decimal)

a = One byte address of the 4800 (1 . . . 127)

CMND = Command word

<data> = Data sent with the command

<t> = Selected terminator

The 4800 responds using the following syntax:

[FF]#a<data><t>

For example, the following command and data is transmitted on the RS-485 interface:

[FF]#MRP2,10<t>

This RPp,i command tells the 4800 at address 77 to run program two, starting at interval ten.

All the Thermotron instruments on the in the RS-485 interface discard the first character, and then wait for the pound sign (code 35 decimal) before interpreting any data. Upon receiving the pound sign, each instrument checks the address word. Finally, only the instrument at address 77 receives the transmitted data.

As another example,the host computer sends a Dump Initial Value command for Channel 2 to the 4800 at address 77:

[FF]#MD2IV<t>

After discarding the first data word, all the Thermotron instruments wait for the pound sign before reading the address. Only the 4800 at address 77 reads the command, and it responds with a Channel 2 initial value of -64.0:

[FF]#M-064.0<t>

After discarding the first character, the host computer waits for the pound sign. Once it reads the pound sign, the host computer reads the address and temperature data from the 4800 at address 77.

SETTING UP THE RS-485 INTERFACE PARAMETERS

Before the RS-485 interface can be used, the following must occur:

- The RS-232 board must be set-up for the RS-485 interface
- The 4800 must be instructed to use the correct interface parameters.
- The 4800 multidrop address and prefix protocol must be set-up.

RS-232/RS-485 Interface Jumper

The RS-232 board has a jumper terminal labeled RS232/RS485. This jumper must be in the RS485 position to operate the interface. Note that power must be removed from the 4800 before re-positioning the jumper.

RS-485 Switched Parameters

The RS-485 interface parameters are set up using the 8-position DIP switch. The switch is located on the computer interface option board and is labeled SW1.

Note that the 4800 only reads these switch settings at power up, after a manual reset (CLEAR + STOP), or after an initialize command from the interface. Therefore, you must perform one of these actions after changing the settings of SW1. Usually, it is easiest to perform the manual reset by pressing the CLEAR + STOP keys simultaneously. This will cause the 4800 to re-initialize itself, including the reading of the interface parameter switch SW1.

The RS-232 interface option board uses SW1 to set most of the interface parameters. The parameters are; Baud, Parity, Handshake line, Handshake polarity, Word Length, and Output terminating sequence. Table 2-4 on page 2-8 provides a quick reference for the SW1 switch settings. The following parameters must be set up as follows at the 4800 and your computer:

- Set the Parity to **No Parity** (SW3 on), and disable parity checks at your computer.
- Set the Word Length to **Eight** (SW7 on), and use eight bits with one stop bit for all transmissions.
- Set the handshake polarity to **No Handshake** (SW6 on), indicating that the 4800 is always ready for data.

Transmit Delay Parameter

The Transmit Delay Time parameter programs the time the 4800 requires to process commands and respond to the Host Computer. This allows the Host Computer to disable its RS-485 transmitter, providing the 4800 enough time to respond. This parameter is set using the **LXDn** command. The value of the Transmit Delay Time parameter should be set only long enough to prevent data collisions on the interface.

Multidrop Addressing and Prefix Protocol

Multidrop addressing and prefix protocol are selected at the 4800 keyboard as follows:

1. Press the **STOP**, **SETUP**, and **0** (zero) keys in sequence. The following prompt is displayed:



NOTE: If the prompt is not displayed, check the **RS232/RS485** jumper on the computer interface board. Make sure the jumper is in the **RS485** position.

2. Press the **ENT** key. One of the following events occurs:
   a. On versions before V2.01.09, the 4800 displays:



   Go to step 5.

   b. Starting with version V2.01.09, The 4800 displays:



   Go to step 3.

3. Use the **CLR** key to toggle the prefix ON or OFF.
   - **PREFIX ON** enables the prefix protocol. Your computer must send an FF hexadecimal character in front of each transmission.
   - **PREFIX OFF** disables the prefix protocol.
   - See Table 2-6 on page 2-17 for a quick reference of the RS-485 protocol.

Table 2-6. RS-485 Protocol Quick Reference Chart.

Address Selection	Prefix Protocol?	Receive Data Syntax	Transmit Data Syntax
Zero (0)	NO	CMND<t>	<data><t>
Zero (0)	YES	[FF]CMND<t>	<data><t>
(1...127)	NO	#aCMND<t>	<data><t>
(1...127)*	YES*	[FF]#aCMND<t>	[FF]#a<data><t>
*Thermotron recommends that you use multi-drop addressing *and* Prefix Protocol.			

4. Press the ENT key. The current address is displayed in decimal as follows:

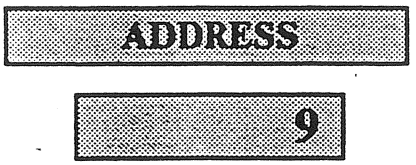

5. Type in the desired address as follows:
   a. Type in a 0 (zero) to disable multidrop addressing. This allows only two devices to communicate.
   b. To enable multidrop addressing, type in the desired decimal address between 1 and 127. The selected address must be reserved for the 4800 only.

NOTE:
Avoid using addresses 10 and 13. These addresses a legal terminators (<CR> & <LF>) and may be misinterpreted by your computer.

   c. See Table 2-6 for a quick reference of the RS-485 protocol.

4. Press the ENT key. The following prompt is displayed:



5. Perform one of the following steps:
   a. Press the ENT key to save the new value as the multidrop address.
   b. Press the CLR key to use the old value as the multidrop address.
6. The 4800 performs the selected operation and returns to the STOP mode.

SECTION III
4800 GROUP COMMAND CODES

The Host Computer uses pre-defined Group commands to control the operation of the 4800 and to communicate with the 4800. The commands accepted by the 4800 are split into three groups:

- Control Group
- Dump Group
- Load Group

Each group is described in the following paragraphs.

CONTROL GROUP COMMANDS

Control Group commands are used by the Host Computer to control the 4800 operating mode, or to command the 4800 to perform a special function. These commands are used to operate the 4800. The Control Group commands are described in Table 3-1.

Table 3-1. Control Group Command Listing.

CONTROL GROUP COMMAND	DEFINITION
R<t>	**Run Program from Hold** - places the 4800 in the RUN PROGRAM mode from the HOLD PROGRAM mode.
RM<t>	**Run Manual** - places the 4800 in the RUN MANUAL mode either from the STOP or HOLD PROGRAM mode.
RPp[,i]<t>	**Run Program** - places the 4800 in the RUN PROGRAM mode. The 'p' indicates the desired program number. The 'i'indicates the starting interval. Note that the starting interval is optional, the 4800 will start at interval #1 if this value is omitted. The optional form of this command, **RPp,i[,S]<t>**, places the 4800 in the RUN PROGRAM SINGLE STEP mode. This will cause the 4800 to go into the HOLD PROGRAM mode at the end of every interval. The computer must issue the RUN command to continue the program. Note that the starting interval must be sent if this option is used.
RP<t>	**Return to Program** - returns to the program which had been suspended using the RM command as described in the Run Manual description. The 4800 will return to the HOLD PROGRAM mode.

Table 3-1. Control Group Command Listing (continued).

CONTROL GROUP COMMAND	DEFINITION
S<t>	**Stop Command** - places the 4800 in the STOP mode. Use this to stop in the RUN MANUAL, RUN PROGRAM, or HOLD PROGRAM modes.
H<t>	**Hold Command** - will place a running program in the HOLD PROGRAM mode.
I<t>	**Initialize Command** - forces a 4800 hardware reset. This reset requires three seconds to complete. Do not do any communications while the reset operation is taking place. In addition to the hardware reset, the 4800 will initialize certain internal parameters to their default settings. These settings are: **Operating Mode** — **STOP** **SRQ Mask** — **160 (decimal)** **Output Terminator** — **Set to switch selection** **Input/Output buffers** — **Cleared** **Local Lockout** — **Off (GPIB only)** **Match Interval** — **0** **SRQ Byte** — **192 (decimal** **Transmit Delay** — **50 milliseconds**
CB<t>	**Clear Buffer Command** - causes the 4800 to clear the output buffer. Any data in the buffer will be lost. See the Dump Group commands for more information about the output buffer.
P<t>	**Print Command** - causes the 4800 to send data to the printer. See the Printer Interface for more information.

DUMP GROUP COMMANDS

The Dump Group commands cause the 4800 to send data back to the Host Computer. These commands cause the 4800 to transmit a specific variable. Each command consists of the primary command **D**, followed by a two letter secondary command. The secondary command identifies the variable to be sent. Some Dump Group commands use the first character of the secondary command to distinguish channel or group number. For example, the command to send the chamber temperature (channel number 1 required) would be:

D1V

While the command to send the number of loops left (no channel number required) would be:

DLL

The Dump Group commands cause the 4800 to load the requested data into its output buffer. The output buffer may hold multiple data values. The Clear Buffer command may be used to insure that the buffer is empty when a Dump Group command is sent. No data can be sent until the complete command line has been read and decoded by the 4800. The Dump Group commands are described in Table 3-2.

The type of interface determines when the data is actually sent to the Host Computer. When a GPIB interface is used, the 4800 must be addressed to Talk and have an active listener on the bus before the data is sent. When an RS-232 interface is used, the data will be sent as soon as the Host Computer is ready. The Host Computer indicates it is ready thru the handshake lines. When the RS-485interfaceisused, thedata is sent after the 4800 waits for the Transmit Delay Time.

DUMP DATA FORMATS

Dump Group commands cause the 4800 to transmit data values and status bytes to the Host Computer. The 4800 sends all data using ASCII characters. However, the format of the data is dependent upon the Dump Group command that is sent to the 4800. Each piece of data sent by the 4800 will be terminated by the selected terminating character, as indicated by <t>. The following data types are used in sending data:

1. **Integer Format** - Data sent by the 4800 will consist of a sign character (+/-) followed by four ASCII decimal digits representing an integer number. For example, the 4800 may send the data +0001<t> in response to the **DIN** (Dump Interval Number) command.
2. **Decimal Format** - Data sent by the 4800 will consist of a sign character (+/-) followed by three ASCII decimal digits, a decimal point (.) and another digit to represents tenths. For example, the 4800 may send the data +125.6<t> in response to the **D1V** (Dump channel 1 Variable) command.
3. **String Format** - Data sent by the 4800 will be a string of ASCII characters. The information in the string depends on the Dump Group command in question and will be covered in the explanation of those commands.

Table 3-2. Dump Group Command Listing.

DUMP GROUP COMMAND	DEFINITION	DUMP DATA FORMAT
D#V<t>	**Dump Variable Command** - causes the cur-rent value of the process variable to be dumped for the selected channel number.	DECIMAL D1V = "+123.4"
D#S<t>	**Dump Set Point Command** - causes the current value of the set point to be dumped for the selected channel number.	DECIMAL D2S = "-056.7"
D#F<t>	**Dump Final Value Command** - causes the final value of the current interval to be dumped for the selected channel.	DECIMAL D2F = +095.5
DPMp<t>	**Dump Program Memory Command** - used to obtain the program specified by the value 'p'. It has two functions. The first function is to prepare the 4800 to send the program interval data (using the 'DPI' commands). The second function is to inform the computer how many intervals the specified program contains. The 4800 sends this number back to the computer. The 4800 must be in the STOP mode to execute this command.	INTEGER DPM1 = "+0005"
DPIi<t>	**Dump Program Interval Command** - used after the DPM command to obtain the information for intermal number 'i', for the program number specified in the DPM command. The 4800 returns a 30 character string which represents the data for that interval in ASCII hexadecimal format. This data is saved by the requesting computer. To receive all data relating to the program, the computer must use the DPI command for every interval number, starting at interval #0, thru the interval number received from the DPM command. The 4800 must be in the STOP mode to execute this command.	STRING DPI0 = "30 BYTE STRING"
DST<t>	**Dump Status Byte Command** - causes the current status byte to be dumped. (Refer to Section 5 for decoding the status byte.)	INTEGER DST = "+0025"
DSR<t>	**Dump Service Request Byte Command** - instructs the 4800 to send the Service Request Status Byte (SRQB) to the computer. The SRQB will then be set to 00 (cleared). Note that the GPIB Serial Poll will also return the SRQ and is preferred in GPIB systems. Refer to Section 5 to interpret the Service Request Byte.	INTEGER DSR = "+0160"

Table 3-2. Dump Group Command Listing. (continued)

DUMP GROUP COMMAND	DEFINITION	DUMP DATA FORMAT
DAL<t>	**Dump Alarm Status Command** - causes the value of the alarm status byte to be sent to the Host Computer. Note that the Status Byte contains an alarm status bit. This bit indicates wether any alarm status change bit which indicates wether therre has been a change in the alarms. (Refer to Section 5 to decode the alarm status byte.)	INTEGER DAL = "+0005"
DIN<t>	**Dump Interval Number Command** - causes the current interval number to be dumped.	INTEGER DIN = "+0120"
DEC<t>	**Dump Error Code Command** - causes the 4800 to send the last error code. Once read, the error code is set to zero.	INTEGER DEC = "+0028"
D#C<t>	**Dump Scale Units Character Command** - instructs the 4800 to send the ASCII value of the units character for the selected channel.	INTEGER D2C = "+0067"
DCF<t>	**Dump Configuration Byte Command** - causes the 4800 to send the value of the instrumentation configuration byte. Refer to Section 5 to decode the configuration byte.	INTEGER DCF = "+0049"
DID<t>	**Dump Identification String Command** - causes the 4800 to send its identification string. This string identifies the version of the software the 4800 is using.	STRING DID = "4800-V2.01.00"
D#X<t>	**Dump Auxiliary Outputs Command** - causes the 4800 to send the status of the auxiliary outputs for the selected AUX group (1, 2 or 3).	INTEGER D3X = "+0015"
DSM <t>	**Dump Service Request (SRQ) Mask Command** - causes the SRQ mask code to be dumped. (Refer to Section 5 to decode the SRQ code.)	INTEGER DSM = "+0024"
DIM<t>	**Dump Match Interval Number Command** - instructs the 4800 to send the interval number which is used for the Interval Match SRQ event. (Refer to Section 5 for the SRQ code descriptions.)	INTEGER DIM = "+0012"
DOT<t>	**Dump Output Terminator Selection Command** - causes the 4800 to send the current value of the output termination selection.	INTEGER DOT = "+0006"

Table 3-2. Dump Group Command Listing. (continued)

DUMP GROUP COMMAND	DEFINITION	DUMP DATA FORMAT
DRT<t>	**Dump Real Time Command** - instructs the 4800 to send the current value of the Real Time Clock.	STRING DRT = "08/29 14:30"
DTL<t>	**Dump Time Left Command** - instructs the 4800 to send the time left for the current interval.	STRING DTL = "01:23"
D#T<t>	**Dump Throttle Command** - instructions the 4800 to send the current value of the control output throttle for the specified channel.	DECIMAL D2L = "-085.2"
DLL<t>	**Dump Loops Left Command** - causes the amount of loops left in the current profile to be dumped.	INTEGER DLL = "+0006"
DNI<t>	Dump Next Interval Command - causes the next interval number to be executed to be sent to the Host Computer. When the programming is not looping, the 4800 responds with the next sequential interval. When the program is looping, the 4800 responds with target interval. When the current interval uses looping, always a DNI command followed by a DLL command. When the loops left are greater than 0, the next interval is the target interval sent in response to the DNI command. If the number of loops left is 0, the next sequential interval is the actual next interval.	INTEGER DNI = "+0011"
DCM<t>	**Dump Control Mode** - Instructs the 4800 to send the current Product Temperature Control Mode. The 4800 responds with a 1 if PTC is ON (Load control), and a 0 if PTC is OFF (Air control).	INTEGER DCM = "+0001"
DHG<t>	**Dump Heat Gain** - Instructs the 4800 to send the current Product Temperature Control heat gain parameter for channel 2. Data format is decimal.	DECIMAL DHG = "+002.4"
DCG<t>	**Dump Cool Gain** - Instructs the 4800 to send the current Product Temperature Control cool gain parameter for channel 2.	DECIMAL DCG = "+001.9"
DHI<t>	**Dump Heat Integral** - Instructs the 4800 to send the current Product Temperature Control heat integral parameter for channel 2.	INTEGER DHI = "+0160"

Table 3-2. Dump Group Command listing. (continued)

DUMP GROUP COMMAND	DEFINITION	DUMP DATA FORMAT
DCI<t>	**Dump Cool Integral** - Instructs the 4800 to send the current Product Temperature Control cool integral parameter for channel 2.	INTEGER DCI = "+0175"
DHO<t>	**Dump Heat Offset** - Instructs the 4800 to send the current Product Temperature Control heat offset parameter for channel 2.	DECIMAL DHO = "+020.4"
DCO<t>	**Dump Cool Offset** - Instructs the 4800 to send the current Product Temperature Control cool offset parameter for channel 2.	DECIMAL DCO = "+019.6"
DXD<t>	**Dump Transmit Delay (RS-485 Only)** - causes the 4800 to send the transmit delay time between responses to dump commands. This delay prevents the 4800 from responding to a dump command before the sender has turned off its own transmitter.	INTEGER DXD = "+0025"
DMS<t>	**Dump Monitor Status** - causes the 4800 to send the System Monitor Status Code on chambers with System Monitors. Refer to Section 5 for a detailed description of the System Monitor Status Code.	INTEGER DMS = "+0005"

LOAD GROUP COMMANDS

Load Group commands are used to send data to the 4800. This data is used to adjust set points, turn auxiliary outputs on and off, and load complete tests into the 4800, as well as other functions. The commands are composed of the primary command letter L, followed by a two letter secondary command which identifies the destination of the data. Some Load Group commands will use the first letter of the secondary command to identify a channel or group number.

Load Group Command Data Format:
Each Load Group command must be accompanied by the data to be loaded in the correct format for the load command being used. The following format codes will be used in the Load Group command descriptions.

n [Number(s)] - The data will consist of one or more numbers in ASCII decimal format. These numbers my be Integers, (1,2,3,etc), Real Numbers (1.0, 25.44, etc), or Scientific Notation (2.5E + 1, 1E2, etc.). The range of values will depend on the Load Group command used.

s String - The data will consist of a string of ASCII Hexadecimal characters. The content of each string is dependent on the individual Load Group commands and will be explained where necessary.

In the case where multiple data items are required to be sent, use commas (,) to separate the individual data values. In addition, an optional comma (,) may be used to separate the command code mneumonic from the data (ex. "L1S,23.5<t>").

The Load Group commands are described in Table 3-3.

Table 3-3. Load Group Command Listing.

LOAD GROUP COMMAND	DEFINITION	LOAD DATA EXAMPLE
L#Sn<t>	**Load Ch# Setpoint Command** - causes the temperature setpoint to be loaded for channels 1, 2 or 3. The "n" indicates the setpoint value.	L1S-20
LPMp,i<t>	**Load Program Memory Command** - causes a program to be loaded into the 4800. The "p" represents the assigned program number. The "i" represents the amount of intervals in the program. If a program with the same number is already in the 4800, it will be overwritten by the new load command. Refer to the Program Memory Commands section for a detailed description of this command.	LPM4,9
LPMp,i,V<t>	**Load Program By Value Command** - causes a program to be loaded into the 4800 using actual values. The "p" represents the assigned program number. The "i" represents the amount of intervals in the program. The "V" instructs the 4800 to interpret the interval values contained in the following LPI commands as actual values. Refer to the Program Memory Commands section for a detailed description of this command.	LPM4,9,V

Table 3-3. Load Group Command Listing.(continued)

LOAD GROUP COMMAND	DEFINITION	LOAD DATA EXAMPLE
LPIi,s<t>	**Load Program Interval Command** - causes a 30 byte interval string to be loaded into the 4800 . The "i" represents the interval number to be loaded. The command must be preceded by the LPMp command. Refer to the Program Memory Commands section for a detailed description of this command.	LPI3,string
LPI0,f1,f2, f3<t>	**Load Program Interval 0 By Value Command** - loads a string of manually entered Final Values into the 4800 . The string labled "f1,f2,f3" represent the final values for the interval. The command must be preceded by the LPMp,i,V command. Refer to the Program Memory Commands section for a detailed description of this command.	LPI0,20 programs the channel 1 with Initial Value of 20°.
LPIi, (values)<t>	**Load Program Interval By Value Command** - loads a string of manually entered values into the 4800 . The "i" represents the interval number to be loaded. The (value) represents the actual format displayed below: LPi,f1,f2,f3,hr,mn,x1,x2,x3,ni,lp,d1,d2,d3 The command must be preceded by the LPMp,i,V and LPI0 commands. Refer to the Program Memory Commands section for a detailed description of this command.	LPI1,20,,,1,30 programs Interval 1 with: Ch 1 Final Setpoint = 20° Interval Duration = 1 hour 30 minutes LPI6,,120,,,,,,1,8,2 programs Interval 6 with: Ch 2 Final Setpoint = 120° Next Interval =1 Number of Loops = 8 Deviation = 2
L#Xn<t>	**Load AUX Command** - causes the selected auxiliary relays for AUX group 1, 2, or 3 to be turned on or off. The "n" indicates a number between 0 and 15 used to enable or disable the auxiliary relays. The Auxiliary relay weighting values are: AUX x-1 = 1 AUX x-2 = 2 AUX x-3 = 4 AUX x-4 = 8 For example, to enable Auxiliaries 2-1 and 2-3, use the following command: L2X5 where 2 = AUX GRP 2, and 5 = 1 (relay 1) + 4 (relay3)	L1X6
LSMn<t>	**Load SRQ Mask Command** - causes the SRQ mask code to be loaded. The "n" represents a number between 0 and 255	LSM129
LIMi<t>	**Load Interval Match Command** - causes the load interval match byte to be loaded. The "i" represents the interval number.	LIM3

Table 3-3. Load Group Command Listing. (continued)

LOAD GROUP COMMAND	DEFINITION	DATA FORMAT EXAMPLE
LKSn<t>	**Load Keyboard Status Command** - allows the key board to be remotely locked or unlocked. The command is translated as follows: **LKS1 = Lock Keyboard** **LKS0 = Unlock Keyboard** Note that when the LKS1 command is sent, the operator cannot unlock the keyboard using the keyboard unlock sequence. The keyboard can only be returned to local by an **LKS0** command, cycling power to the 4800 off and on, or by pressing the **CLR** and **STOP** keys simultaneously.	LKS1
LLLn<t>	Load Loops Left Command - allows the number of loops left to be modified on the current interval. This command resets the temporary loop counter for the current interval. Once the loops are counted down, the interval uses the Number of Loops originally programmed into the test profile. The "n" represents a number between 0 and 125.	LLL28
LOTn<t>	**Load Output Terminator Command** - causes the output terminator byte to be loaded. The terminator bytes (indicated by "n") are described below: 0 - Echo Received Terminator 1 - End of Interval (EOI) (GPIB only) 2 - Carriage Return (CR) only 3 - CRI and EOI (GPIB only) 4 - Line Feed (LF) only 5 - LF and EOI (GPIB only) 6 - CR and LF 7 - CR, LF and EOI (GPIB only)	LOT6
LRT<t>	**Load Real Time Clock Command** - allows - the real time clock to be set to the current time. Note that the 4800's clock is synchronized (seconds = 00) when the 4800 recieves the LRT command. The data field of this command is formatted as follows: **LRT,mm,dd,hh,mm,"** **mm = Month (01 - 12)** **dd = Day (01 - 31)** **hh = Hour (0 - 23)** **mm = Minutes (0 - 59)**	LRT8,30,14,25

Table 3-3. Load Group Command Listing. (continued)

LOAD GROUP COMMAND	DEFINITION	DATA FORMAT EXAMPLE
LTL<t>	Load Interval Time Left Command - allows the time left for the current interval to be edited from HOLD PROGRAM without changing the original program. The data field of this command is formatted as follows: "LTL,hh,mm" hh = Hour (0 - 23) mm = Minutes (0 - 59)	LTL0,5
L#Fn<t>	Load Channel # Final Value Command- Loads a new final value for the selected channel. The new value is used for the current interval only. To use the command, the 4800 must be placed in the HOLD PROGRAM mode, or an error is generated. Note that if the 4800 is in the PTC control mode, any value sent to channel 1 or 2 is loaded in channel 2.	L2F85
LCMn<t>	Load Control Mode - allows the Host Computer to select Air control or Load control. This is a global command used to turn PTC ON or OFF. The command is translated as follows: LCM1 = PTC ON (Load control from channel 2) LCM0 = PTC OFF (Air control from channel 1) Note that if PTC is OFF, the channel 2 PTC parameters are stored but not used by the 4800.	LCM1
LHGn<t>	Load Heat Gain - Loads the 4800 with the Product Temperature Control heat gain parameter for channel 2. The "n" represents a number between 0.1 and 10.0.	LHG2.0
LCGn<t>	Load Cool Gain - Loads the 4800 with the Product Temperature Control cool gain parameter for channel 2. The "n" represents a number between 0.1 and 10.0.	LCG1
LHIn<t>	Load Heat Integral - Loads the 4800 with the Product Temperature Control heat integral time parameter for channel 2. The "n" represents a value between 0 and 1000 seconds.	LHI170
LCIn<t>	Load Cool Integral - Loads the 4800 with the Product Temperature Control cool integral time parameter for channel 2. The "n" represents a value between 0 and 1000seconds.	LCI160
LHOn<t>	Load Heat Offset - Loads the 4800 with the Product Temperature Control heat offset parameter for channel 2. The "n" represents a value between 0.0 and 25.0 degrees centigrade.	LHO20.5

Figure 3-3. Load Group Command Listing. (continued)

LOAD GROUP COMMAND	DEFINITION	DATA FORMAT EXAMPLE
LCOn < t >	**Load Cool Offset** - Loads the 4800 with the Product Temperature Control cool offset parameter for channel 2. The "n" represents a value between 0.0 and 25.0 degrees centigrade.	LCO22
LXDn	**Load Tranmit Delay (RS-485 Only)** - Loads a new delay time in miliseconds between responses to delay commands. The delay time prevents the 4800 from transmitting a response to a dump command before the sender has turned off its own transmitter. This delay is programmable from 0 to 255 miliseconds. The transmit delay is set to 50 miliseconds when the 4800 is initialized thru a Power On Reset or the Initialize Command. Note that the data example includes the RS-485 addressing scheme.	#MLXD35

SECTION IV
4800 PROGRAM MEMORY AND EDIT FROM HOLD COMMANDS

The 4800 Program Memory and Edit from Hold commands are used to perform specific operations. The 4800 Program Memory Dump and Load commands are used by the Host Computer to:

- transmit or receive temperature profiles to and from the 4800,
- transmit temperature profiles from one instrument to another instrument of the same type,
- and to save tests in the Host Computer's memory for archival purposes.

The 4800 program memory transfer commands are used to transfer blocks of memory over the interface bus. There is one method for *dumping* temperature profiles from the 4800's program memory to the computer, and two methods for *loading* temperature profiles from the computer to the 4800's program memory. These methods are described in this section.

The 4800 edit from HOLD commands adjust the current interval's parameters from the HOLD PROGRAM mode. These commands immediately adjust the current interval for various testing purposes.

These commands were first defined in the Group Command section. This section applies these commands to their specific functions.

DUMPING TEMPERATURE PROFILES FROM 4800 TO COMPUTER

To transmit temperature profile data from the 4800 to the host computer, the following commands must be used in order:

- Dump Program Memory (DPM)
- Dump Program Interval (DPI)

Note that the 4800 must always be in the STOP mode when dumping or loading program memory. If the 4800 is not in STOP, an error will be generated, and the 4800 will not send or receive program data.

The DPM command prepares the 4800 for transmission of an entire temperature profile. The DPI commands then instruct the 4800 to transmit the temperature profile data, one interval at a time. These commands are described below.

THE DUMP PROGRAM MEMORY COMMAND

The DPM command instructs the 4800 to prepare to send the specified temperature profile, interval by interval, to the host computer. This command must be sent first in the process of receiving a temperature profile from the 4800. The DPM command is sent as follows:

DPMp

where p is the desired program number (1 thru 10).

The 4800 will respond with an integer data value which represents the number of intervals in the program, including the *zeroeth* interval which contains starting values and other program information. (The number of intervals should be displayed and documented for future use during load program memory operations.)

THE DUMP PROGRAM INTERVAL COMMAND

The Dump program Interval command(s) are used following the DPM command to obtain the interval data. These commands instruct the 4800 to send the data for the specified interval to the host computer. The syntax for this command is as follows:

DPIi

where i represents the desired interval. The intervals must be requested in order, starting at interval number zero (0), thru the interval number returned from the DPM command.

Upon receipt of each DPI command, the 4800 transmits the program interval data in an ASCII hexadecimal format. The data contains a string of thirty characters representing one interval. The values it represents are in formats used internally by the 4800. The Host Computer saves data for later use by the 4800, or for transmission to another 4800. To be usable, the data strings must be saved in the order they are received. Note that the data can only be transferred to a 4800 with the same internal configuration.

An example of the Dump Program Memory, Dump Program Interval command sequence is as follows:

Computer sends:	"DPM1"
4800 Responds:	"# of Intervals"
Computer sends:	"DPI0"
4800 Responds:	"Interval data string #0"
Computer sends:	"DPI1"
4800 Responds:	"Interval data string #1"
Computer sends:	"DPI2"
4800 Responds:	"Interval data string #2"

...etc. (Repeat DPIi command for each interval.)

In the above example, the host computer uses the DPM command prepare the 4800 to send the interval data for program #1. The 4800 responds with the number of intervals contained in this profile. Next, the Host computer then transmits a DPI command for each interval data string, in order, including interval #0. The 4800 responds to each DPI command with a thirty byte string of ASCII hexadecimal characters. Finally, the computer saves these interval data strings, along with the number of intervals in this program, for later use.

Note that the 4800 must always be in the STOP mode when dumping or loading program memory. If the 4800 is not in STOP, an error will be generated, and the 4800 will not send or receive program data.

LOADING TEMPERATURE PROFILES FROM COMPUTER TO 4800

There are two methods for loading temperature profiles from the host computer to the 4800. The first method uses the interval data strings which were obtained using the dump program memory and dump program interval commands. This method is referred to as *Loading from Program Memory*. The second method allows the host computer to load the temperature profiles directly, referred to here as *Loading by Value*.

The first method is usually the easiest to implement on the host computer since it only requires that the computer be able to store the interval data strings and use them when required. The 4800 is used to enter the actual program information, thru the keyboard, eliminating this requirement from the computer.

The second method is provided for those users who require the flexibility of full remote programming via the host computer. The computer then has the requirement of entering the temperature profile data, and then sending that information to the 4800.

These methods are described below.

LOADING FROM PROGRAM MEMORY

This method transfers an entire temperature profile to the 4800's program memory storage. The temperature profile was originally saved during a program dump operation to the 4800 in ASCII hexadecimal format. To transmit temperature profile data from the Host Computer to the 4800, the following commands must be used in order:

- Load Program Memory (LPM)
- Load Program Interval (LPI)

The LPM command prepares the 4800 to receive temperature profile data strings from the Host Computer. The LPI commands then instruct the 4800 to receive the temperature profile data, one interval at a time. These commands are described below.

The Load Program Memory Command

The LPM command instructs the 4800 to prepare for loading the interval data strings for the specified program number. The syntax for this command is as follows:

LPMp,i

where **p** is the desired program number and **i** is the number of intervals to be loaded.

The number of intervals specified should be the same as the number of intervals saved during the original Dump operation. The original number of intervals was transmitted in response to the DPM command. The number of intervals should have been documented at that time. This ensures that the entire program is sent.

The 4800 will check if this program number already exists. If it does, it will be deleted from memory. This will free up any memory used by that program, which may be required for the

program to be loaded. The 4800 will then check the number of available interval storage spaces, and it will generate an error if there is insufficient memory to hold the number specified by i..

The Load Program Interval Command

Once the LPM command has prepared the 4800 to receive data, the LPI commands transmit the interval data strings. These data strings are the same ones received from the 4800 using the DPI commands. The interval data strings are sent to the 4800, one at a time. The syntax for this command is as follows:

LPIi,string

where **i** is the interval number to be loaded, and **string** is the thirty character data string. The intervals must be loaded in sequence, starting at interval number zero, thru the number specified in the LPM command.

An example of the Load Program Memory, and Load Program Interval commands is listed below:

Computer sends	"LPM1,3"
Computer sends	"LPI0,interval data string #0"
Computer sends	"LPI1,interval data string #1"
Computer sends	"LPI2,interval data string #2"
Computer sends	"LPI3,interval data string #3"

In this example, the host computer uses the LPM command to prepare the 4800 to receive the interval data for program #1, which will contain three intervals. The Host computer then uses the LPI command to send the interval data string for each interval in sequence, starting at interval #0. The computer should check for any errors by monitoring the SRQ byte, and/or the Error Code using the DEC command. Once loaded, the host computer may start this program using the run commands.

THE LOAD PROGRAM BY VALUE COMMANDS

The second method for loading temperature profiles into the 4800 is called *Load Program by Value*. This allows the host computer to send actual data values for the program parameters such as final values, interval times etc. The load program by value command is very similar to the LPM command described above, with the addition of the *load by value switch*. The syntax for this command is as follows:

LPMp,i,V

- **p** refers to the program number to be loaded
- **i** is the number of intervals for this program
- **V** is the *load by value* switch.

The 4800 will check the program number and number of intervals available as described above.

The V switch will instruct the 4800 to interpret the data to be received with the subsequent LPI commands as actual data values.

The Load Program By Interval Command

After sending the LPM command, the host computer must send the data for each interval specified by the i parameter, using a special form of the Load Program Interval command. Each Load Program Interval command will contain the data each parameter of the interval, or will use a defined default value.

The data sent with this command will be in ASCII decimal format, and the ASCII comma (,) will be used to separate the data fields.

The general syntax for this command is as follows:

LPI0,f1,f2,f3

and

LPIi,f1,f2,f3,hr,mn,x1,x2,x3,ni,lp,d1,d2,d3

Note that interval number 0 only requires the final values fields, which are actually the initial values for the profile. All other intervals may require more information to compile the interval, as indicated in the second LPI command above.

The mnemonics used for each data field and their default values are listed in Table 4-1.

Table 4-1. Load Program By Interval Mnemonics.

MNEMONIC	DESCRIPTION	DEFAULT VALUE
i	The interval number being loaded. The intervals must be sent in order, starting at interval #0, thru the interval specified in the LPM command.	No default, the interval number must be sent with each LPI command.
f1..f3	The final values for the interval, for channels 1, 2, and 3. (The 4800 may be configured for one, two or three channels. However, the data field for all three channels must always be included.)	The 4800 will use the final value of the previous interval, 0 for the interval number 0.
hr, mn	Interval time in hours and minutes.	00 Hours, 00 Minutes
x1..x3	Auxiliary output groups 1 thru 3.	The 4800 will use the Auxiliary data of the previous interval, 0 for the interval number 1.
ni	The next interval to be executed at run time. A loop or branch would be entered here.	The 4800 will use the next successive interval number.
lp	The number of loop repetitions if the next interval is not the 'next' interval, and therefore a loop is selected.	The default is 0 when not looping, 1 when looping is selected.
d1..d3	The continue deviations. These may be entered only when the interval time is 00 hours and 00 minutes or an error will occur.	The 4800 will default to a continue deviation of 0 if these values are not sent for a zero time interval.

The following rules must be followed when using the load program by value commands.

1. The Load Program commands can not be concatenated, use one command line for each command.

   Example: LPI0,20 < t >

2. End each command line at the last non-null data field. A comma may not end the command line.

   Example: LPI1,50,,,1, < t > is illegal

3. The order and presence of all fields must be preserved. Use commas to hold the place of all null fields . For example, to use all defaults except Next Interval and Number of Loops for Interval 4, send:

   LPI4,,,,,,,,,1,10 < t >

Load Program By Value Example

The following temperature profile will be used as an example for the Load Program by Value commands.

Int #	FV1	Time	AuxGrp1	AuxGrp2	AuxGrp3	NI	LP	d1
(0)	20C							
1	20C	2:00	- 2 - 4	1 - - 4	- - - -	2	0	
2	30C	0:00	- 2 - 4	- - - -	- 2 3 -	3	0	1
3	30C	2:00	- - - -	- - - -	- 2 3 -	4	0	
4	65C	4:00	1 - 3 -	1 2 - -	- - - -	5	0	
5	65C	8:00	1 - 3 -	1 2 - -	- 2 3 4	6	0	
6	30C	0:00	- - - -	- - - -	- - - -	3	25	1

This profile can be described as follows:

- Starting at 20 degrees, soak for 2 hours, and turn on Auxiliaries 1-2, 1-4, 2-1, and 2-4.
- Step to 30 degrees, wait until the temperature is within 1 degree of set point. Turn Auxiliaries 2-1 and 2-4 off, and turn Auxiliaries 3-2 and 3-3 on.
- Soak here for 2 hours, turn off Auxiliaries 1-2 and1-4.
- Ramp to 65 degrees in 4 hours. Turn on Auxiliaries 1-1, 1-3, 2-1 and 2-2. Turn off Auxiliaries 3-2 and 3-3.
- Soak here for 8 hours, and turn on Auxiliaries 3-2, 3-3, and 3-4.
- Step to 30 deg and wait until temperature is within 1 degree. Turn all the auxiliaries off. Then loop back to interval #3 and repeat 24 times.

The Load Program by Value commands which will send this to the 4800 are as follows:

Computer sends	"LPM1,6,V"
Computer sends	"LPI0,f 20"
Computer sends	"LPI1,f ,f ,f ,h 2 ,m 0,x 10,x9"
Computer sends	"LPI2,f 30,f,f,h,m,x,x,x6,n,l,d 1"
Computer sends	"LPI3,f,f,f,f,h 2,m,x 0"
Computer sends	"LPI4,f 65,f ,f,h 4,m,x 5,x3,x0"
Computer sends	"LPI5,f,f,f,f,h 8,m,x,x,x14"
Computer sends	"LPI6,f 30,f 95,f,h,m,x 0,x0,x0,n 3,l 25,d 1"

Note that each field uses a lower case letter in this example. This option aids in the identification of the field, and maintains its presence. If these lower case letters are used, be careful not to exceed 100 characters per command line, as this will overflow the input buffer of the 4800.

Also, note that each command string ends after the last non-null data field.

The null fields („) make use of the default values used by the 4800, as described above.

EDIT FROM HOLD COMMANDS

The Edit from Hold commands change the values of the current interval for testing and modification purposes. Using these commands, the user enters new values into a suspended program. These values are used in place of the program's values for one interval without changing the program. With these commands, the user tries out new values when writing and editing a program, or performs a special test on the product.

The following commands can be used in the PROGRAM HOLD state to modify the interval values:

- L#Sn Load Channel # Setpoint Command
- L#Xn Load Channel # Auxiliary n Command
- L#Fn Load Channel # Final Value Command
- LTL,hh,mm Load Interval Time Left Command

Using these commands, the user can execute a variety of profile conditions:

- The L#Sn command initiates a step change by the 4800 to a new setpoint.
- The L#Xn command turns on and off the selected Auxiliary Relay.
- The L#Fn command changes the final value, which affects the interval's ramp as well.
- The LTL,hh,mm command adds or subtracts the amount of time left to transition from the set point to the final value. This can change a ramp interval to a soak interval or vice versa.

In addition, the commands can be combined to cause specific conditions to occur. For example, if the setpoint, final value, and interval time values are changed, the 4800 will step to the setpoint, and ramp to the final value in the specified interval time. Note that the 4800 uses the current set

point as the initial value when calculating the desired transition rate (or ramp speed). The calculation is performed using the following equation.

$$\text{Ramp rate} = \frac{\text{Final Value - Current Set Point}}{\text{Time Left}}$$

These commands are implemented using the following two methods:

- Program Testing from Hold
- Dummy Program Testing using Single-Step Mode

Program testing from Hold runs a one time test during execution of a program. Dummy program testing in Single Step mode is equivalent to running a Manual mode test using the I/O bus. An example of each method is described below.

PROGRAM TESTING FROM HOLD

This method allows the user to modify an interval during execution of a program. The interval is modified as follows:

1. First, the program is placed in the HOLD PROGRAM mode by sending the Hold Command (H).
2. Next, send the desired commands to the 4800:

L2F 125	Load Channel 2 Final Value with 125°C
L2S 45	Load Channel 2 Set Point with 45°C
LTL 0,10	Load Time Left with 0 hours, 10 minutes

   When the example listed above is run, the 4800 will step up to 45°C, and ramp to 125°C. Note that if the chamber is not capable of the change rate, the chamber will heat at full throttle for 10 minutes and then transition to the next interval.

3. Finally, run the program using the Run Program from Hold command (R). The values entered are run for one interval without affecting the program's stored values. Once the interval has been executed, the program transitions to the next interval and the data entered from hold is lost.

DUMMY PROGRAM TESTING USING SINGLE STEP

This method of testing is a basic version of manual mode using the I/O interface. This method is implemented as follows:

1. First, load a dummy program into the 4800. Use the Load Program by Value commands as follows:

LPM1,1,V	Load Program 1, containing 1 interval, by value
LPIO,21	Load Program Interval 0 with the initial value of 21°C
LPI1,21	Load Program Interval 1 with a Final Value of 21°C, using default settings for the other values. (Refer to the Load Program By Value paragraph in this section.)

2. Next, start the program using the Run Program Single Step command:

RP1,1,S	Run Program 1, starting with interval 1, using the Single Step mode

   The Single Step mode causes the 4800 to go into the HOLD PROGRAM mode at the end of every interval. The dummy program is defaulted to a 00:00 time interval, causing the 4800 to go into the PROGRAM HOLD mode immediately.

3. Next, send the desired commands to the 4800:

L2F 75	Load Channel 2 Final Value with 75°C
LTL 0,5	Load Time Left with 0 hours, 5 minutes
L1X 3	Load Auxiliary Group 1 with the value 3, which turns AUX 1-1 and 1-2 on

   When the example above is run, the 4800 ramps to 75°C in five minutes with the systems controlled by AUX 1-1 and AUX 1-2 on.

4. Run the program using the Run Program from Hold command (R). The values entered are run for one interval without affecting the program's stored values.

   - During execution, the Host Computer can issue Dump Status (DST) commands to monitor the status of the 4800. This allows the Host Computer to determine when the interval is completed.
   - Once the interval has been executed, the 4800 returns to the HOLD PROGRAM mode because it is still in the Single Step mode.

5. Each time the program returns to the HOLD PROGRAM mode, new values may be entered, and the program executed as described in steps 3 and 4.

   - Note that if the Run command is issued, and the time left is 00:00, the 4800 will proceed to the next interval. In this example, the 4800 will go into the STOP mode, and Single Step will be disabled.

The above example uses the DST command to determine when the interval is completed. As an option, the Host Computer could:

- read the Service Request byte to detect an **End of Interval** or **Change of Operating Mode** event,
- and then use the Status byte to check for the HOLD PROGRAM mode.

In addition, the system using the IEEE-488 interface could instruct the 4800 to interrupt the Host Computer on either of these events by using the Load SRQ Enable Mask command (LSMnn).

SECTION V
INTERPRETING THE DATA SENT BY THE 4800

This section describes how to interpret the codes, status, and information sent by the 4800. First, the procedures for converting the data are described. Following the description, the different bytes and codes are described.

HOW TO CONVERT THE DATA

In order to understand the meaning of the data sent by the 4800, it must be decoded. The sections which follow will explain how the various data values are to be interpreted. To understand the information in some of the data, the decimal value must be converted to a binary value, using a standard conversion method. This manual will refer to the Most Significant Bit (MSB) as d7 and the Least Significant Bit (LSB) as d0. Each bit, from d7 to d0, is assigned the following decimal values.

d7 = 128 decimal
d6 = 64 decimal
d5 = 32 decimal
d4 = 16 decimal
d3 = 8 decimal
d2 = 4 decimal
d1 = 2 decimal
d0 = 1 decimal

For example, the value 155 decimal is equivalent to 10011011 binary, by the following conversion:

d7 + d4 + d3 + d1+ d0 = =
128 + 16 + 8 + 2 + 1 = 155

HOW TO INTERPRET THE DATA BYTES

During normal operations, the 4800 sends information to the Host Computer thru the use of the following bytes of data:

- Status Byte
- Alarm Status
- Configuration Byte
- SRQ Byte
- Auxiliary Output Byte
- System Monitor Status Byte

It is necessary for the user to understand the meaning of the data contained in these bytes. These bytes of data are described in the following paragraphs.

HOW TO INTERPRET THE STATUS BYTE

The Status Byte is obtained using the Dump Status command, DST. The 4800 returns an integer value, with a range of 0 to 255 decimal. Convert the data value to binary and decode as shown in Table 5-1. The Status information may be used to find the current operating condition of the 4800, and to monitor the results of a command which has been sent over the interface.

Table 5-1. Decoding the Status Byte.

BIT# (VAL)	NAME	SET CONDITION	CLEAR CONDITION	COMMENTS
BIT 7 (128)	Lock Status	Keyboard Locked	Keyboard Unlocked	The Keyboard lock may be operated using the standard Key Lock, GPIB Local/Remote, or LSKn command.
BIT 6. (64)	Alarm Status	Alarm(s) Active	Alarms Inactive	Read Alarm Status Byte to determine Actual Alarm Comnditions.
BIT 5. (32)	Model	4800	2800	Also available using DID command.
BIT 4 (16)	Temp Scale	Celsius	Fahrenheit	Read Only. May use D1C command
BIT 3 (8)	Program Suspended	Suspended	Not Suspended	Active only during RUN MANUAL mode.

BIT# (VAL)	NAME	SET CONDITION	CLEAR CONDITION	COMMENTS
BIT 2 (4)	Operating Mode Bit 2			
BIT 1 (2)	Operating Mode bit 1			
BIT 0 (1)	Operating Mode Bit 0			

OPERATING MODE BIT 2	BIT 1	BIT 0	DECIMAL VALUE	CONDITION
0	0	0	0	STOP
0	0	1	1	STARTING
0	1	0	2	RUN MANUAL
0	1	1	3	RUN POGRAM
1	0	0	4	HOLD PROGRAM
1	0	1	5	PROGRAM ENTRY
1	1	0	6	SET UP MODE
1	1	1	7	DELAYED START

HOW TO INTERPRET THE ALARM STATUS

The Alarm Status is obtained using the Dump Alarm command DAL. The 4800 returns an integer value, with a range of 0 to 255 decimal. Convert the data value to binary and decode as shown in Table 5-2. In each case, if the bit is set than the alarm is active, if the bit is cleared, then the alarm is not active. See How to Set the Alarms for more information about the alarms in the 4800.

Note
Alarms may only be set thru the keyboard.

Table 5-2. Decoding the Alarm Status.

BIT# (VAL)	NAME	SET (1) CONDITION	CLEAR (0) CONDITION	COMMENTS
BIT 7 (128)	NOT USED			ALWAYS CLEARED (0)
BIT 6 (64)	NOT USED			ALWAYS CLEARED (0)
BIT 5 (32)	CH3 Process	Alarm ON	Alarm OFF	CH3 UNITS ONLY Cleared for 1 & 2 CH units
BIT 4 (16)	CH3 Deviation	Alarm ON	Alarm OFF	CH3 UNITS ONLY Cleared for 1 & 2 CH units
BIT 3 (8)	CH2 Process	Alarm ON	Alarm OFF	CH2 UNITS ONLY Cleared For 1 CH Units
BIT 2 (4)	CH2 Deviation	Alarm ON	Alarm OFF	CH2 UNITS ONLY Cleared For 1 CH Units
BIT 1 (2)	CH1 Process	Alarm ON	Alarm OFF	PROCESS ALARM ALSO PLACES 4800 IN STOP MODE
BIT 0 (1)	CH1 Deviation	Alarm ON	Alarm OFF	

HOW TO INTERPRET THE CONFIGURATION BYTE

The Configuration Byte is obtained using the Dump Configuration command DCF. This information is used to determine the configuration settings of the 4800. The data returned by the 4800 is in the integer data format and is decodes as shown in Table 5-3.

Table 5-3. Decoding the Configuration Byte.

BIT# (Value)	NAME	SET (1) CONDITION	CLEAR (0) CONDITION	COMMENTS
BIT 7 (128)	T/C Input Range	Extended -100°C to +272°C	Standard -150°C to +250°C	Absolute T/C Input Range. Actual T/C Range Depends on Chamber.
BIT 6 (64)	2800 COOL	Enables 2800 Cool Control	HEAT ONLY CONTROL	Used On 'SL' Chamber Models Only. (2800 Models Only)
BIT 5 (32)	SYSTEM MONITOR	System Monitor Connected	No System Moniotr Connected	4800 Models Only
BIT 4 (16)	4800	4800	2800	Selects Controller Model
BIT 3 (8)	CH 3	CH 3 ON	CH 3 OFF	4800 Models Only
BIT 2 (4)	3.5 MODEL	USE 3.5 Temp. Limits	Use Standard Temp. Limits	3.5 CU. FT. Model Requires Special Temperature Limits
BIT 1 (2)	DEG. F	Use Degrees Fahrenheit	Use Degrees Celsius	Also Available in Status Byte
BIT 0 (1)	CH 2	CH 2 ON	CH 2 OFF	USe To Determine If Unit Is 1, 2 or 3 Channel

HOW TO INTERPRET THE SRQ BYTE

The SRQ Byte is usually sent by the 4800 in response to a SERIAL POLL command by the controller on the GPIB interface. The 4800 responds to the Serial Poll as defined by the IEEE-488 standard by placing its status information on the data bus of the GPIB. In addition, the Dump SRQ byte **DSR** may be used to obtain the same status byte by those interfaces which may not support the SERIAL POLL operation or by the RS-232/RS-485 Serial interface.

NOTE
Do not confuse this status byte with the information sent by the Dump Status command **DST**.

To use this data, convert the decimal value to binary and decode each bit position as shown in Table 5-4. Note that the data is reset to zero once the SRQ byte has been read, either thru the SERIAL POLL or the **DSR** command. Successive reads will return the data = zero.

Table 5-4. Decoding the SRQ Byte.

BIT# (VAL)	NAME	SET (1) CONDITION	CLEAR (0) CONDITION	COMMENTS
BIT 7 (128)	POWER ON RESET	4800 Executed Power On Reset	No Power On Reset	GPIB Clear Command And/or 'I' Command Will Cause This Event
BIT 6 (64)	rsv	4800 Has Activated GPIB 'SRQ' Line	4800 Has Not Activated GPIB 'SRQ'	Set For GPIB Only If Event Is Enabled Thru Srq Mask Byte
BIT 5 (32)	ERROR	GPIB, RS-232 or Comand Error	no Errors	Use 'DEC' Command To Read Last Error Code
BIT 4 (16)	END OF PROGRAM	End Of Program	Not End Of Program	
BIT 3 (8)	MATCH INTERVAL	Start Of Match Interval	Not Match Interval	Use 'LIMn' Command To Specify Match Interval
BIT 2 (4)	END OF INTERVAL	Set At End Of Every Interval	Not End Of Interval Since Last Read	4800 May be in HOLD if Single Step Option is used, Else 4800 Goes on to Next Interval
BIT 1 (2)	ALARM STATUS	Change In Alarm status Since Last Read	No Change In Alarm Status Since Last Read	Use 'DAL' Command To Read Current Alarm Status
BIT 0 (1)	OPERATING MODE	Change In Opeating Mode Since Last Read	No Change In Operating Status Since Last Read	Use 'DST' Command To Read Current Operating Mode.

HOW TO USE THE SRQ MASK

The SRQ Mask byte is used to enable and/or disable the various conditions which may interrupt the Host Computer via the GPIB SRQ line. The SRQ Mask byte is sent to the 4800 using the Load SRQ Mask command **LSMn**, where **n** is replaced by the data as explained here.

The bit positions in the SRQ Mask are identical to those in the SRQ status byte described above. To enable one of the conditions, set the corresponding binary bit position to a one (1) or on state. To disable the condition, set the bit to the zero (0) or off state. Convert the binary value to a decimal value and load using the **LSM** command. For example, to enable the Error and End of Program conditions, set bits d4 (16) and d5 (32) to the on state (16 + 32 = 48). The command would be **LSM,48**. This command will instruct the 4800 to use the value 48 decimal or 00110000 binary, as the SRQ Enable Mask. This will enable the End of Program and the Error interrupts.

The RS-232 interface has no interrupts equivalent to the GPIB's SRQ line. However, the 4800 may be configured to send a message to the Host Computer when one of the SRQ conditions have been met. This accomplished by setting bit d6, decimal value 64, of the SRQ Mask byte along with the desired interrupt conditions.

When the 4800 has been so configured, and one of the enabled conditions occurs, it will transmit the message SRQ to the Host Computer. The computer must trap this message, and then use the **DSR** command to obtain the current SRQ byte, and hence the interrupting condition status.

For example, if the Host Computer wants to be informed when the program is complete, it will send an SRQ Mask of d6 (64) plus d4 (16) or:

LSM,80

Whenever a program is complete, the 4800 will automatically transmit the message:

SRQ

Care must be taken in the use of this function in that the Host Computer must always look for the SRQ message, even when it may expect data due to a dump command. Note that the bits set in the SRQ Mask will only determine if the SRQ line is set on the GPIB interface, or if the SRQ message is transmitted on the RS-232 interface. The individual status bits will be set as the conditions occur regardless of the Mask bit pattern.

The SRQ Mask is set to 160 decimal or 10100000 binary whenever the 4800 goes thru initialization, either thru a power up or an initialize command. This mask setting enables the power on reset bin, and the error bit.

HOW TO INTERPRET AND USE THE AUXILIARY OUTPUT BYTE

Auxiliary Output data is sent and received by the 4800 as a decimal value representing the four outputs of each AUX group as follows:

d0 Auxiliary Output #1
0 = = Aux Output Off
1 = = Aux Output On

d1 Auxiliary Output #2
0 = = Aux Output Off
1 = = Aux Output On

d2 Auxiliary Output #3
0 = = Aux Output Off
1 = = Aux Output On

d3 Auxiliary Output #4
0 = = Aux Output Off
1 = = Aux Output On

d4 thru d7 Not Used. Always 0

For example, if AUX GRP 3 Outputs 1 and 4 where on, the 4800 would send the data +0009 in response to the Dump Auxiliary command D3X. The auxiliary outputs may be sent when the 4800 is in the RUN MANUAL or HOLD PROGRAM modes by using the Load Auxiliary Command. For example, the command L2X12 would turn on AUX GRP 2 Outputs #4 (decimal value 8) and #3 (decimal value 4) since 8 + 4 = 12. For more information refer to Table 5-5.

Table 5-5. Decoding the AUX Output Byte.

BIT# (VAL)	NAME	SET (1) CONDITION	CLEAR (0) CONDITION	COMMENTS
BIT 7	NOT USED			AUX Outputs Only Active In Run Manual Mode, Run Program Mode And Hold Program Mode Outputs May Be Modified In Run Manual Mode And Hold Program Mode Using 'L#Xn' Command
BIT 6	NOT USED			
BIT 5	NOT USED			
BIT 4	NOT USED			
BIT 3 (8)	AUX 4	ON	OFF	
BIT 2 (4)	AUX 3	ON	OFF	
BIT 1 (2)	AUX 2	ON	OFF	
BIT 0 (1)	AUX 1	ON	OFF	

HOW TO INTERPRET THE SYSTEM MONITOR STATUS BYTE

The System Monitor Status byte is obtained by sending the Dump Monitor Status command DMS. The 4800 responds with an integer value in ASCII format. The value ranges from 0 to 15 on systems with System Monitors. A value of 255 indicates that the 4800 is not configured for a System Monitor. The System Monitor Status byte is interpreted as follows:

DATA BIT	WEIGHTING VALUE	DESCRIPTION
0	1	**Fault Status** - set if the System Monitor is in the FAULT Mode.
1	2	**Trip Status** - set if the System Monitor is in the TRIP mode. The TRIP mode causes the 4800 to go into the STOP mode.
2	4	**Machine Status** - set if anautomatic reset safety switch is tripped. If a program is running, the 4800 goes into the HOLD mode until the bit is cleared. Once the bit is cleared, the 4800 returns to the RUN PROGRAM mode.
3	8	**Service Status** - set when one of the System Monitor's service intervals has timed out.

HOW TO USE THE ERROR CODES

The 4800 will indicate an error condition by setting bit 4 of the SRQ status byte. The Host Computer monitors this status either thru a polled method, or by enabling the error bit to set the SRQ line as described in the SRQ Mask section. The 4800 places the error code for each error in an error code buffer. The error code buffer holds the last eight error codes. This buffer is a Last In First Out (LIFO) buffer. This means that the last error code stored in the buffer will be the first code to be sent, the next to last will be the second code sent, etc.

HOW TO INTERPRET THE ERROR CODE(S)

When an error conditions occurs, the Host Computer may use the Dump Error Code command **DEC** to identify the cause of the error. The 4800 will return an integer number in the range of 0 to 29 to indicate the cause of the error, with 0 indicating that no more errors are in the buffer. Once the error code buffer has been emptied in this manner, subsequent reads to the 4800 using the **DEC** command will return an error code of zero (0). Refer to Table 5-6 for a description of what each error code means.

Table 5-6. Error Code Definitions.

ERROR CODE	DEFINITION
0	No error, Error Code Buffer is empty.
1	Input Buffer overflow. The 4800 can hold up to 100 characters.
2	Illegal GPIB GET (Group Execute Trigger) command. The 4800 must be in the STOP state before it may execute the trigger command.
3	No Program to run for trigger command. The 4800 will try to run Program 1, it must exist.
4	GPIB Bus error. This may occur when the 4800 is addressed to Talk and there are no addressed Listeners (GPIB only).
5	Serial Interface Input Line error. This may occur due to communication parameter (baud, bits/char, etc.) problems.
6	Invalid Primary command. The 4800 could not parse the first letter of the command. The allowed primary commands are "R, S, H, D, L, I, P, C.
7	Invalid Run command. For instance, trying to run when not in STOP. See the Control Group commands for correct usage.
8	Invalid Stop command. The 4800 was not in the RUN or HOLD mode.
9	Invalid Hold command. The 4800 must be in the RUN PROGRAM mode to execute the HOLD command.
10	Invalid Dump command. The primary command 'D' was followed by an illegal secondary command.
11	Invalid Load command. The primary command 'L' was followed by an illegal secondary command.

Table 5-6. Error Code Definitions.(continued)

ERROR CODE	DEFINITION
12	Data Out of Range. The numeric data sent with a Load command is out of the limits allowable for that command.
13	Output Buffer overflow. The 4800 output buffer has been filled up. Data should be read from the output buffer when it is requested.
14	Not in STOP mode for 'DPM' command.
15	Program requested in 'DPM' command does not exist.
16	Illegal Load Program Memory command. The 4800 must be in the STOP mode to execute this command.
17	Insufficient Interval Space available for number specified in 'LPMp,i' command.
18	Error in Program Memory sent with 'LPI' command. The data sent with the command must be exactly the data previously received from a Dump command.
19	The test which was loaded using the 'LPI0' command has the wrong configuration code. This program may have come from another 4800 with a different configuration.
20	Invalid Program # specified in the 'LPM' or 'DPM' command. Numbers 1 thru 10 are valid.
21	Invalid Interval Number in 'LPI' command. The intervals must be loaded in sequence, and must not exceed the number sent with the 'LPM' command. Interval numbers from 0 to 127 are valid.
22	Number of Intervals specified in the 'LPM' command does not match number of intervals in program.
23	Command not allowed in current operating mode. For example, load Set Point not allowed when running in MANUAL mode or HOLD PROGRAM mode.
24	Error in Number Format. See Load Command Data for more information.
25	Channel Not Present.
26	4800 detected a RAM failure while running or attempting to run.
27	Real Time Clock not present for a 'LRT' or 'DRT' command.
28	Host Computer transmitted a Load Control Mode (LCMn) command to a 4800 not configured for Product Temperature Control.
29	Host Computer transmitted a Load Control Mode (LCMn) command to a 4800 which is not in the STOP mode.

SECTION VI
4800 COMMAND EXAMPLES

This section provides programming examples for the 4800 interface. These examples will illustrate for the user some typical command syntaxes using an HP-85 computer with GPIB, a PC compatible using GPIB via a National Instruments interface card, and a PC compatible using RS-232 serial interface.

EXAMPLES USING THE HP-85 COMPUTER

In these examples, it is assumed that the HP-85 GPIB interface module is set to address 7 (factory default), and that all other user configurable parameters for the HP-85 GPIB interface module are left at the default settings.

The 4800 is set to address 00, (switch positions1 thru5 'ON'), resulting in a combined address of 700. In addition, the terminating sequence has been selected to echo the received terminator by setting switch positions 6, 7, and 8 on the 4800 option board to all 'ON'. Since the HP-85 will send a carriage return / line feed sequence with each OUTPUT command, the 4800 will use the same terminating sequence when it sends data to the computer.

EXAMPLE #1 (HP-85)

This example will initialize the 4800, load channel one set point with 25 degrees, issue the run manual command, then instruct the 4800 to send the temperature value. The HP-85 will read the value and display it on the CRT display, then repeat the dump/read sequence.

```
100 CLEAR 700 @ WAIT 3000          ! Send device clear  and wait 3 seconds

110 OUTPUT 700 ; "L1S25"           ! Load channel one set  point with
                                     25 degrees.

120 OUTPUT 700 ; "RM"              ! Send the Run Manual  command

130 OUTPUT 700 ; "CB;D1V"          ! Clear the output buffer  and command
                                     the 4800 to send the temperature

140 ENTER 700 ; V                  ! Read the 4800's  response and store in
                                     variable 'V' memory space.

150 DISP "Temp = ";V               ! Write the result on the  CRT

160 GOTO 130                       ! Repeat reading  and displaying temp.
```

EXAMPLE #2 (HP-85)

This example will initialize the 4800, load the SRQ mask byte to instruct the 4800 to interrupt on the end of a program, start program #1, and then wait for the end of the program to occur. When the program is over, it will simply print that fact on the printer. This program assumes that program #1 exists.

```
100 CLEAR 700 @ WAIT 3000          ! Send device clear  and wait 3 seconds

110 OUTPUT 700 ; "LSM16"           ! Load SRQ mask value  for interrupt
                                     at end of program.

120 S = SPOLL(700)                 ! Serial Poll the 4800

130 ON INTR 7 GOTO 200             ! Identify interrupt  handler.

140 ENABLE INTR 7;8                ! Interrupts enabled now.

150 OUTPUT 700 ; "RP1,1"           ! Send the Run Program  command.

160 DISP "WAITING FOR END..."      ! Wait here for end of program

170 GOTO 170                       ! Waiting...

190 !Interrupt handler starts here

200 S = SPOLL(700)                 ! Serial Poll the 4800

210 STATUS 7,1 ; S1                ! Get (and clear) the  interrupt status.

220 PRINT "End of Program"         ! Print message.

230 END                            ! All done.
```

EXAMPLES USING A PC COMPATIBLE AND THE NATIONAL INSTRUMENTS GPIB ADAPTER CARD.

These examples will use the BASIC language routines to communicate to the 4800. The National Instruments GPIB card and drivers must be configured before use. The most important configuration parameter is the 'Send EOI with last byte of write'. This will provide a terminating sequence for the 4800 on every write by the computer.

Since the National Instruments GPIB card will also terminate reads on the EOI signal, we will set the parameter switch to use the EOI signal, by setting the switch positions as follows:

Position:	1	2	3	4	5	6	7	8
State:	OFF	ON	ON	ON	ON	OFF	ON	ON

In addition, it is assumed that all required initialization has been done to the GPIB adapter and drivers prior to line 100 in the example below.

The 4800 is identified to the driver routines as 'TPC%'. This would typically be done through the use of the IBFIND function. (The IBFIND function is a National Instruments command.)

EXAMPLE #3 (PC + NATIONAL INST GPIB)

This example will initialize the 4800, load channel one set point with 25 degrees, issue the run manual command, and then instruct the 4800 to send the temperature value. The computer will read the value and display it on the CRT display, then repeat the dump/read sequence. Note that the data is not accompanied with a terminating character. This is because the National Instruments card has been set up to send the EOI signal with the last byte of each write transmition. In addition, this program uses a subroutine to call the write routine, which is for the programmer's convenience. Note that the loop counter instruction on Line 110 must provide a three second delay. Adjust this instruction, or any time delay command to provide a three second delay.

```
100 CALL IBCLR(TPC%)                          ' Send device clear

110 FOR T=0 TO 2000 : NEXT T                  ' Wait for 4800 to reset

120 V$ = SPACE$(40)                           ' Reserve some space for the return variable.

130 COMND$ = "L1S25" : GOSUB 500              ' Set command for Load channel one set
                                                point with 25 degree

140 COMND$ = "RM" : GOSUB 500                 ' Send the Run Manual command

150 COMND$ = "CB;D1V" : GOUSB 500             ' Clear the output buffer and command the
                                                4800 to send the temperature
```

Example #3 (continued)

```
160 CALL IBRD(TPC%,V$)          ' Read the 4800's response and put in
                                  string variable 'V$'

180 GOTO 150                    ' Repeat reading and displaying temp.

190 ' Subroutines start here

500 CALL IBWRT(TPC%,COMND$)     ' Send each command using the IBWRT
                                  subroutine.

510 RETURN                      ' End of send command subroutine.
```

EXAMPLE USING A PC COMPATIBLE AND THE COM1 RS-232 SERIAL INTERFACE PORT

These examples will use the BASIC language routines to communicate to the 4800 using the serial interface port.

A standard 25 line cable may be used to connect the 4800 to the PC's COM1 port.

The example program will open the serial port using the standard interface parameters of:

- 300 baud,
- even parity,
- 7 bits per character,
- and 1 stop bit.

The 4800 parameter switch must be set as follows:

Position:	1	2	3	4	5	6	7	8
State:	OFF	0FF	OFF	OFF	ON	ON	OFF	ON

The BASIC command 'PRINT #1' will append a carriage return / line feed terminating sequence to the command string when it is sent to the serial port, providing the proper terminating sequence.

The BASIC command 'LINE INPUT #1' will read until it detects a carriage return. With SW1 position 8 on, the 4800 will send the carriage return.

CFC-FREE
ULT-80 and ULT-95
Low Temperature
Bath/Circulators

Thermo NESLAB Manual P/N U00487
Rev. 04/27/00

Instruction and Operation Manual



ULT-80 and ULT-95 Table of Contents

Preface

Compliance 2
Unpacking 2
Warranty 2
NES-care 2
After-sale Support 2

Section I Safety

Warnings 3

Section II General Information

Description 4
Specifications 4

Section III Installation

Site 5
Electrical Requirements 5
Plumbing Requirements 6
Fluids 6
Filling Requirements 6
Flow Control 7
Nitrogen Purge 7
Drain 7

Section IV Operation

Start Up 8
Controller Keypad & Display 8
Changing a Value 9
Controller Displays 9
Operator's Loop 10
Setup Loop 10
Error Messages 13
High Temp/Low Liquid Level Safety 13
9-Pin Accessory Connector 14
Analog Interface 15

Section V Maintenance & Troubleshooting

Service Contracts 16
Cleaning 16
Rust 16
Checklist 16
Service Assistance 18
Technical Support 18
ULT-95 Rear View 19
ULT-95 Left Side View 19
ULT-80 Right Side View 20
ULT-80 Left SideView 20
Additional Loops 21
Calibration Loop 22
Calibration Procedure 22

Appendix A Serial Communications Protocol

Appendix B Programming Software

WARRANTY

Preface

Compliance

Products tested and found to be in compliance with the requirements defined in the EMC standards defined by 89/336/EEC as well as Low Voltage Directive (LVD) 73/23/EEC can be identified by the CE label on the rear of the unit. The testing has demonstrated compliance with the following directives:

LVD, 73/23/EEC	Complies with UL 3101-1:93
EMC, 89/336/EEC	EN 55011, Class A Verification EN 50082-1:1992 IEC 1000-4-2:1995 IEC 1000-4-3:1994 IEC 1000-4-4:1995

For any additional information refer to the Letter of Compliance that shipped with the unit (Declaration of Conformity).

Unpacking

Retain all cartons and packing material until the unit is operated and found to be in good condition. If the unit shows external or internal damage, or does not operate properly, contact the transportation company and file a damage claim. Under ICC regulations, this is your responsibility.

Warranty

Units have a warranty against defective parts and workmanship for one full year from date of shipment. See back page for more details.

NES-care Extended Warranty Contract

- Extend parts and labor coverage for an additional year.
- Worry-free operation.
- Control service costs.
- Eliminate the need to generate repair orders.
- No unexpected repair costs.

Other contract options are available. Please contact Thermo NESLAB for more information.

After-sale Support

Thermo NESLAB is committed to customer service both during and after the sale. If you have questions concerning the operation of your unit or the information in this manual, contact our Sales Department. If your unit fails to operate properly or if you have questions concerning spare parts or Service Contracts, contact our Service Department.

Before calling, please refer to the serial number label to obtain the following information:

- BOM number _____

- Serial number _____

- Software version (see page 21) _____

Section I Safety

Warnings

Make sure you read and understand all instructions and safety precautions listed in this manual before installing or operating your unit. If you have any questions concerning the operation of your unit or the information in this manual, contact our Sales Department (see After-sale Support).

Performance of installation, operation, or maintenance procedures other than those described in this manual may result in a hazardous situation and may void the manufacturer's warranty.

Transport the unit with care. Sudden jolts or drops can damage the refrigeration lines.

Observe all warning labels.

Never remove warning labels.

Never operate damaged or leaking equipment.

Never operate the unit without cooling fluid in the bath.

Always turn off the unit and disconnect the line cord from the power source before performing any service or maintenance procedures, or before moving the unit.

Always empty the bath before moving the unit.

Never operate equipment with damaged line cords.

Refer service and repairs to a qualified technician.

For proper travel, the compressors' support springs are tightened prior to shipping. The springs (four per compressor) must be loosened before operating the unit. Remove the rear and side panels for easy access to the compressors and springs.

In addition to the safety warnings listed above, warnings are posted throughout the manual. These warnings are designated by an exclamation mark inside an equilateral triangle with text highlighted in bold print. Read and follow these important instructions. Failure to observe these instructions can result in permanent damage to the unit, significant property damage, or personal injury or death.

Section II General Information

Description

The ULT-80 and ULT-95 are self-contained refrigerated bath/circulators. The units consist of a circulating pump; heater; stainless steel reservoir; microprocessor temperature controller; and a cascade configuration, air-cooled refrigeration system.

The refrigeration control is independent of the main power switch so that the compressor may be turned off to allow fast warm-up. The automatic load reset feature compensates the proportioning for changes in the bath load, thereby eliminating shifts in setpoint accuracy.

Specifications

	ULT-80	ULT-95
Temperature Range[1]	-80°C to +10°C	-90°C to -30°C
Temperature Stability	±0.03°C	±0.2°C
Cooling Capacity[2,3]	250 watts at -70°C	340 watts at -80°C
Work Area Dimensions[4] *(L x W x D)*		
Inches	5 3/8 x 7 x 9½	2" DIA Fill Hole
Centimeters	13.7 x 17.8 x 24.1	5.1 cm Fill Hole
Compressor	2 x 1 H.P.	2 x 1.5 H.P.
Heater	1200 watts	1650 watts
Working Volume		
Gallons	4.0	
Liters	15.1	
Unit Dimensions *(H x W x D)*		
Inches	47½ x 27¼ x 17¾	47 x 32 1/8 x 21½
Centimeters	120.7 x 69.2 x 45.1	119.4 x 81.6 x 54.6
Weight		
Pounds	336	370
Kilograms	152.4	168.0
Pump	"Z" Pump (Force/Suction)	"H" Pump (Increased agitation)
Pump Head[5]		
60 Hz	Max. Head 13' (3.9M)	Max. Head 31' (9.4M)
50 Hz	Max. Head 10' (3.3M)	Max. Head 21' (6.4M)
Flow[5]		
60 Hz	0-12.4 liters/minute at 0' Head	0-16.0 liters/minute at 0' Head
50 Hz	0-10.0 liters/minute at 0' Head	0-12.4 liters/minute at 0' Head

1. 50 Hz ULT-95 units -85°C to -30°C. ULT-80 +80°C temperature range units are available, these units hhave 2400 watt heaters (BOMs 180104201601 and 180106201601).
2. 200 watts for ULT-80, 50 Hz operation. 280 Watts for ULT-95, 50 Hz operation.
3. Cooling capacity is affected by: a) Recirculating temperature - cooling capacity decreases approximately 2% per °C below +20°C; b) Ambient temperature - cooling capacity will decrease at the rate of 1% per °F above 80°F.
4. Usable depth for ULT-80 is 8 inches.
5. Using fluid with specific gravity of 1.0.

Section III Installation

Site



The refrigeration system requires that the unit must be located on a level surface. Never place the unit in a location where excessive heat, moisture, or corrosive materials are present.

The unit should be located in a laboratory or clean industrial environment where ambient temperatures are inside the range of +50°F to +95°F (+10°C to +35°C).

Units have an air-cooled refrigeration system. Air is drawn through the front and discharged through side and rear panels. The unit must be positioned so the intake and discharge are not impeded. A minimum clearance of 3 feet (1 meter) on all four sides is necessary for adequate ventilation. Inadequate ventilation will reduce cooling capacity and, in extreme cases, can cause compressor failure.

Excessively dusty areas should be avoided and a periodic cleaning schedule should be instituted (see Section V, Cleaning).

The unit will retain its full rated capacity in ambient temperatures up to approximately +75°F (+24°C). Reduce the cooling capacity 1% for every 1°F above +75°F, up to a maximum ambient temperature of +95°F. In terms of °C, reduce the cooling capacity 1% for every 0.5°C above +24°C, up to a maximum ambient temperature of +35°C.

Electrical Requirements



The unit construction provides extra protection against the risk of electrical shock by grounding appropriate metal parts. The extra protection may not function unless the power cord is connected to a properly grounded outlet. It is the user's responsibility to assure a proper ground connection is provided.

Refer to the serial number label on the rear of the unit to identify the specific electrical requirements of your unit.

Make sure the voltage of the power source meets the specified voltage, ±10%.

Plumbing Requirements

Before installing the unit to an instrument that previously used tap water as a cooling fluid, flush the instrument several times to remove any rust or scale that has built up. The manufacturer of the instrument should be able to recommend a cleaning fluid for their equipment.

The inlet/outlet connections are located on the right side of the control box. These connections are $^{3}/_{8}$" O.D. stainless steel serrated pipes, which will accept $^{3}/_{8}$" or $^{5}/_{16}$" I.D. tubing. Connect the pump inlet to the outlet of the external system. Connect the outlet to the inlet of the internal system.



Ensure plugs are installed on the inlet/outlet if you are not circulating to an external system.

Flexible tubing, if used, should be of heavy wall or reinforced construction. Make sure all tubing connections are securely clamped. Avoid running tubing near radiators, hot water pipes, etc. If substantial lengths of tubing are necessary, insulation may be required to prevent loss of cooling capacity.

It is important to keep the distance between the unit and the instrument being cooled as short as possible, and to use the largest diameter tubing practical. Tubing should be straight and without bends. If reductions must be made, they should be made at the inlet and outlet of the instrument being cooled, not at the unit.

If substantial lengths of cooling lines are required, they should be pre-filled with cooling fluid before connecting them to the unit.

Fluids

The selected cooling fluid should have a viscosity of 50 centistokes or less at the lowest operating temperature. When operating below +8°C, use a non-freezing fluid. **Do not use corrosive fluids.**

Filling Requirements

Fill the bath to within ¾ inch of the top plate. Low fluid level in the bath can cause serious damage to the pump and the reservoir heater. Always maintain the level to within ¾ inch of the top plate.



Never run the unit when the bath is dry.

When pumping to an external system, be sure to have additional bath fluid on hand to compensate for the loss of volume to that system.

Flow Control

ULT-80s are equipped with a flow adjustment control knob. The knob is located directly in front of the control panel on the right side. When shipped, the flow is completely off. (Check that flow is off before starting the unit.)

To start flow, turn the knob in a counterclockwise direction until desired flow is obtained. Full flow is obtained by turning the knob approximately 3½ rotations.



To avoid damage, do not overtighten the adjustment knob in either the open or closed position.

Nitrogen Purge

NOTE: This is a standard feature on ULT-95s, an optional feature for ULT-80s.

The nitrogen purge valve is designed to accept a constant flow of dry nitrogen into the reservoir. The nitrogen blankets the cooling fluid, preventing air oxidation and water absorption.

Remove the reservoir cover by removing the screws. Fill the reservoir with cooling fluid following the procedure listed above. Replace the cover and screws. Connect the nitrogen line to the valve on the reservoir cover.

A pressure regulator, set to 5 psig (.035 kg/cm^2) or lower, should be used to prevent fluid overflow.

Drain

A reservoir drain is located on the rear of the unit. The drain is a Parker 6PNBZ plug.

Section IV Operation

Start Up

Before starting the unit, check all electrical, plumbing, and inlet/outlet connections; and make sure the work area has been properly filled with bath fluid.

To start the bath, place the MAIN ON/OFF switch to the ON position. The pump will start and the controller will display the temperature of the fluid in the reservoir. (The controller may display **Er21** until the reservoir fluid temperature drops within 5°C of the unit's high-end temperature range, see page 13.) To start the refrigeration system place the REFRIGERATION ON/OFF switch to the ON position.

NOTE: For high-temperature units the refrigeration automatically shuts down above 35°C. The light in the REFRIGERATION ON/OFF switch will also extinguish. If rapid cool down is needed above 35°C use a Thermo NESLAB Aerocool heat exchanger which connects to the unit's pump fittings. If an Aerocool is not available, immerse a tap water cooling coil into the reservoir. Either of these methods can also be used to increase stability.

Once the cooling system has been turned off, it should remain off for approximately 10 minutes before attempting to restart. Failure to allow this time for pressure equalization within the refrigeration system could cause the compressors to cycle on their overloads.

Controller Keypad & Display

The microprocessor controller maintains temperature using a Proportional-Integral-Derivative (PID) algorithm. It is designed with self-diagnostic features and easy to use operator interface.

The controller's **HEAT** indicator shows the status of the heater. The **HEAT** indicator is lit when the heater is on. The **HEAT** indicator flashes when the heater is pulsating.

The **REMOTE** indicator illuminates whenever the unit is configured to accept a remote setpoint. The controller's **SENSOR** indicator illuminates whenever the external sensor is selected. See Controller Displays on the next page.

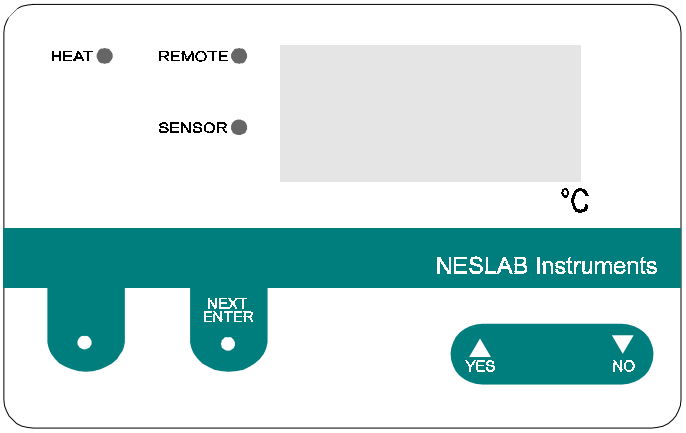

NEXT ENTER
Use this key to scroll forward through the menus and also to accept and save changes.

YES, ▲
This dual purpose key is used to answer yes to YES/NO questions or to increment numerical values upward for setting numeric values.

NO,
This dual purpose key is used to answer no to YES/NO questions or to decrement numerical values downward for setting numeric values.

Changing a Value

The **YES** key increments the value. The **NO** key decrements the value.

The display will flash as soon as either key is depressed, and will continue to flash until the **NEXT ENTER** key is pressed twice to accept the new value.

The new value will not be used by the controller until the **NEXT ENTER** key is depressed twice and the display stops flashing.

NOTE: If the **ENTER** key is not depressed twice within 10 seconds, the controller will time out and the new value will not be accepted. The controller will revert to the previous setpoint value.

Controller Displays

An alphanumeric display presents numeric readings of various operating conditions within the bath. Display function is selected by pressing the appropriate keys to move through a menu of available information.

When the controller is first powered up it performs a quick self-test then enters the Operator's Loop. The Operator's Loop displays the bath temperature and is used to change the setpoint, see Figure 1 on next page. The Setup Loop can be accessed from the Operator's Loop by pressing and holding the key combinations shown on Figure 1. The Setup Loop is used to adjust the controller's PID parameters, select the internal or external sensor, select a remote setpoint source, and set the high/low temperature limits. It is also used to select and configure RS-232 operation. See Figure 2 on pages 11-12.

Operator's Loop

When the controller is first powered up it enters the Operator's Loop, displaying reservoir fluid temperature. Press the NEXT ENTER key to view the setpoint.

SP displays the controller setpoint. The display will flash between SP and the actual setpoint number. Use the YES/NO keys to change the setpoint value. Once the desired setpoint is displayed, press the NEXT ENTER key twice.

NOTE: If the bath is controlled via RS-232 communications, the setpoint can not be changed from the keypad.

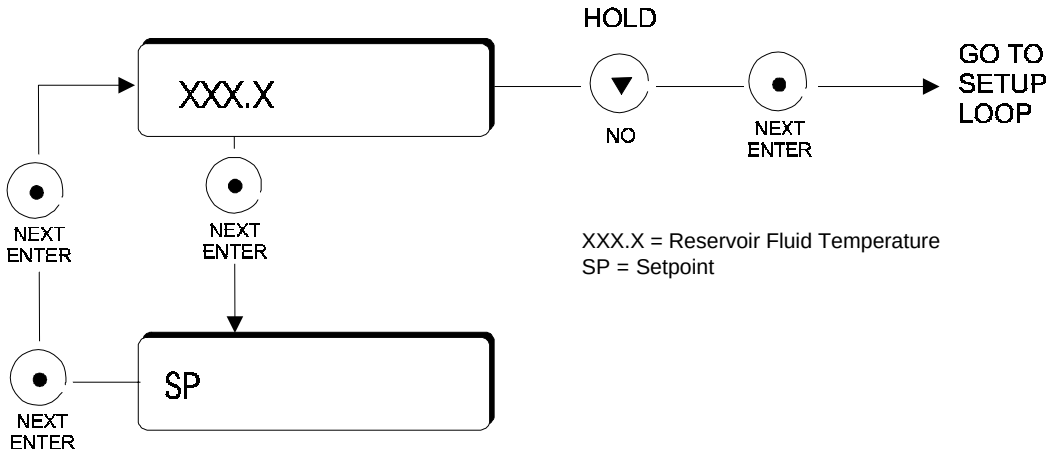

Figure 1 Operator's Loop

Setup Loop

The Setup Loop is used to adjust the controller's PID parameters; select the internal (1) or external (2) sensor; select a remote setpoint source; set the high/low temperature limits; and select and configure RS-232 operation.

Enter the Setup Loop from the Operator's Loop by pressing and holding the NO key, then press the NEXT ENTER key. Use the YES/NO keys to adjust the values. Press the NEXT ENTER key twice to accept the new value.

While in the Setup Loop, if any key is not pressed during a one-minute time span, the controller will automatically return to the Operator's Loop temperature display.

NOTE: If the unit exceeds either temperature limit, the appropriate error message will flash, see page 13. The unit will not shut down (unless the temperature exceeds the high temperature safety setting, see page 13). You will also receive an error code if the optional external sensor is selected but it is not installed.

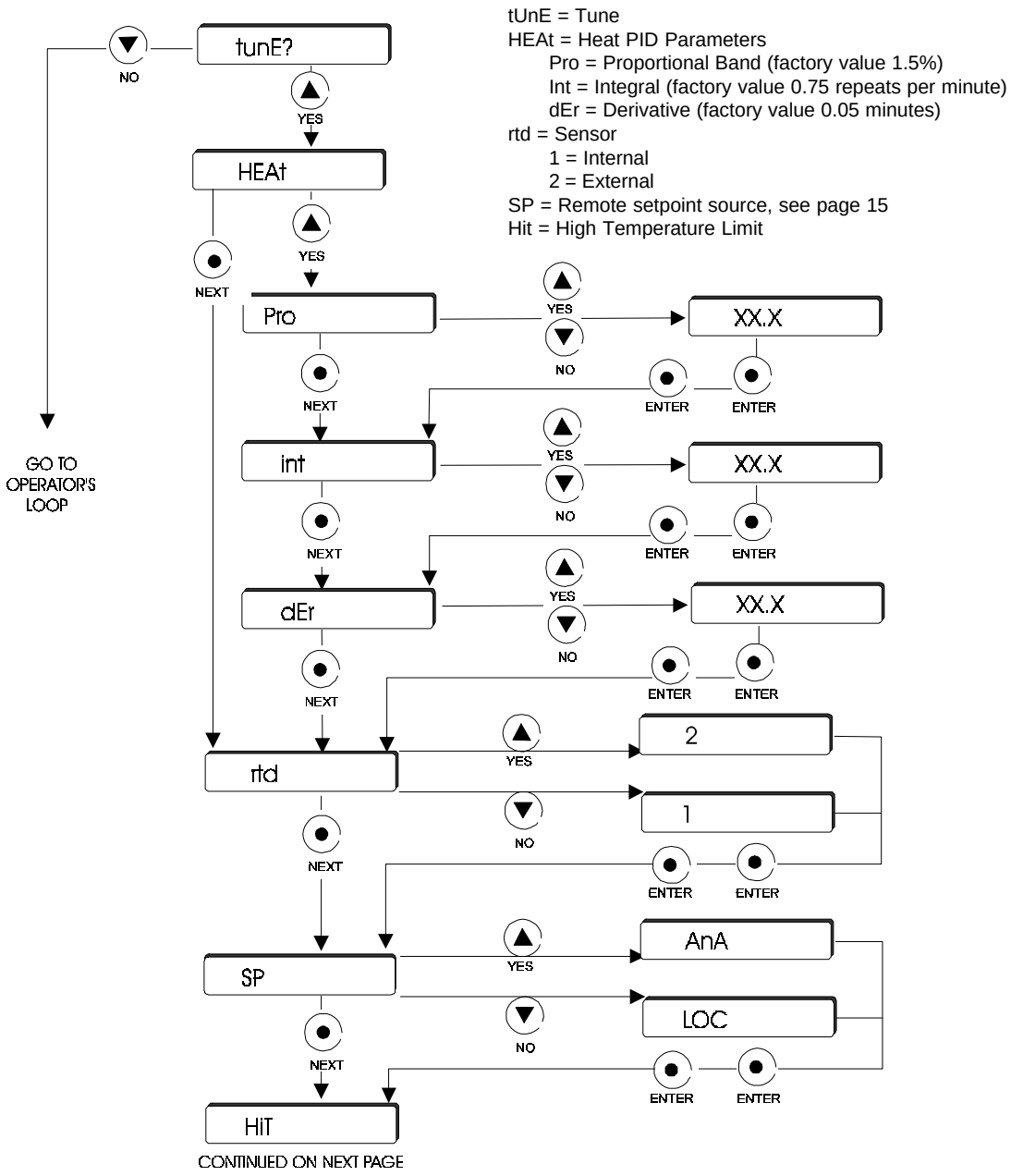

Figure 2 Setup Loop (1 of 2)

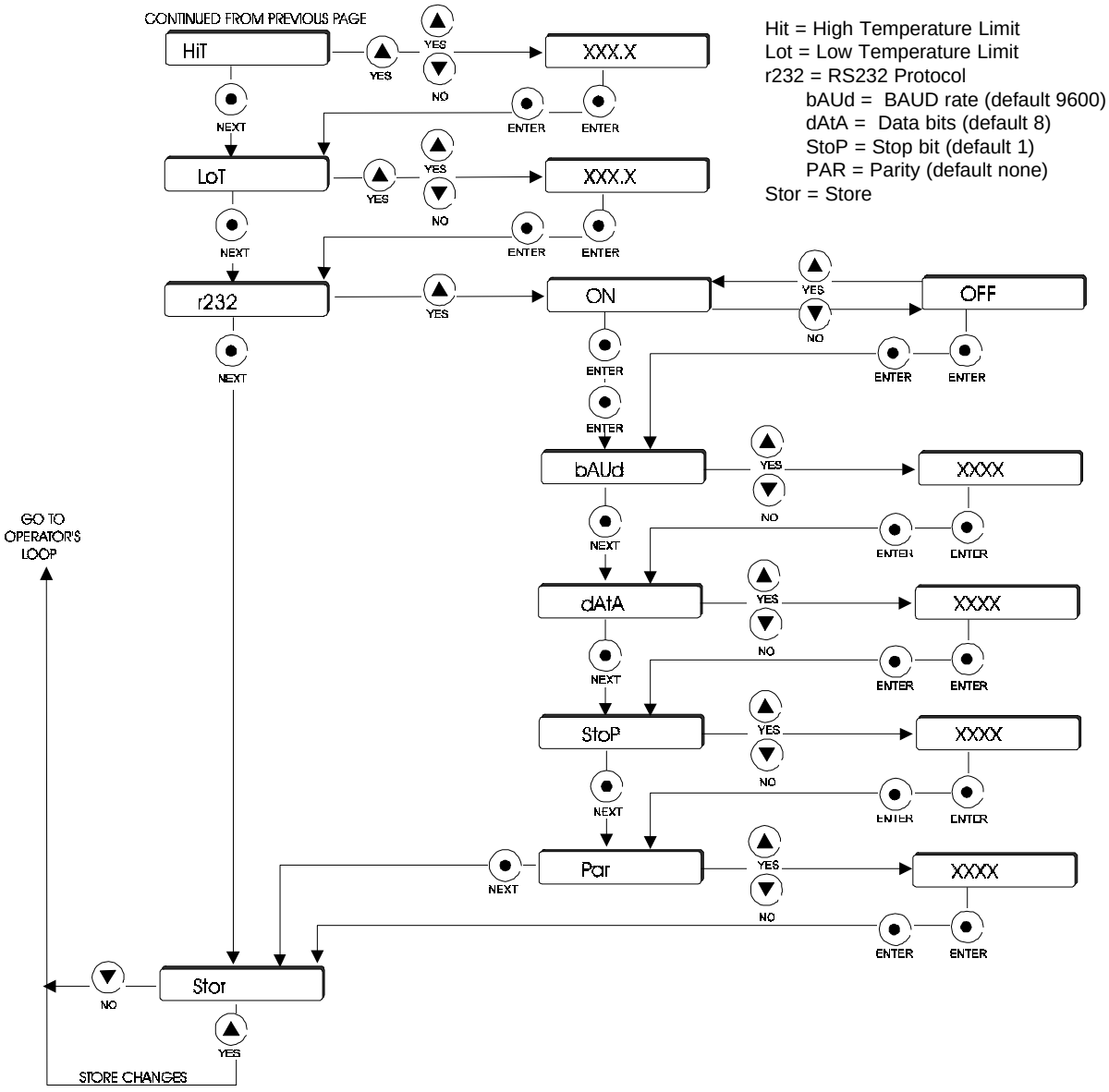

Figure 2 Setup Loop (2 of 2)

NOTE: Should you desire to return to the temperature display and abort *all* changes, keep pressing the **NEXT ENTER** until the display reads **Stor**, then press **NO.**

Error Messages

Error	Action
Er00:	ROM Checksum
Er01:	RAM Test Failed
Er02:	Keypad Test Failed
Er04 - Er13:	Interrupt Error
Er14:	Synchronous Error
Er15:	Asychronous Error
Er16:	Bad Calibration
Er19:	Low Temp Limit
Er21:	High Temp Limit
Er23:	RTD2 Shorted
Er24:	RTD2 Open/Not Installed
Er25:	RTD1 Shorted
Er26:	RTD1 Open
HTC:	High Temperature Cutout
Er52:	System Error

NOTE: On start up Er21 is active until the reservoir fluid temperature drops within 5°C of the unit's high-end temperature range. Errors 00 through 15 will lockup the controller keypad. Errors 00 through 03 may be cleared by de-pressing the NEXT ENTER key.

High Temp/ Low Level Cutout

To protect your application, the adjustable High Temperature/Low Liquid Level Safety (HIGH TEMP/LOW LEVEL) ensures the heater will not exceed temperatures that can cause serious damage to your unit. A single temperature sensor, located on the heater coils in the bath, monitors both conditions. A High Temperature/Low Liquid Level fault occurs when the temperature of the sensor exceeds the set temperature limit.

In the event of a fault, the unit will shut down. The cause of the fault must be identified and corrected before the unit can be restarted.

The safety is not preset and must be adjusted during initial installation. To set the safety, locate the HIGH TEMP/LOW LEVEL SAFETY adjustment dial on the rear of the pump box. Turn the dial fully clockwise and turn the Power switch OFF then back ON.

Start the unit. Adjust the setpoint for a few degrees higher than the highest desired fluid temperature and allow the bath to stabilize at the temperature setpoint. Turn the HIGH TEMP/LOW LEVEL SAFETY dial counterclockwise until you hear a click and the unit shuts down. The FAULT LED will light to indicate a fault has occurred.

Cool the bath and then, without moving the adjustment dial, turn the Power switch OFF then back ON.

NOTE: The safety switch has a temperature range of 7°C to 180°C.

9-Pin Accessory Connector

The unit is equipped with two 9-pin D-connectors located on the rear of the control box. The female COMM is used for RS232 communication (see Appendix); the male is used with an optional external sensor.



RS232 Pin Connections

Pin #	Function
1	No connection.
2	TX = Transmitted data from controller
3	RX = Received data to controller
4	No connection
5	GND = Signal ground
6	No connection.
7	CTS = Clear to send
8	RTS = Request to send
9	No connection

Hardware	Internal Connector	Mating Connector
	AMP Part# 745491-2	**AMP Part# 745492-2**

Remote Sensor Connections

Pin #	Function
1	3-wire RTD connection A
2	No connection
3	No connection
4	3-wire RTD connection A
5	No connection
6	No connection.
7	3-wire RTD connection B
8	No connection
9	No connection

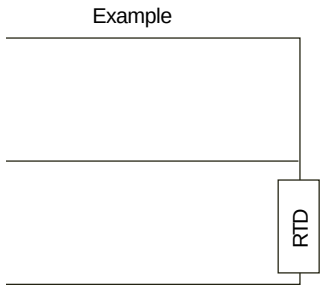

Hardware	Internal Connector	Mating Connector
	AMP Part# 745492-2	**AMP Part# 745491-2**

Analog Interface

An 15-pin D subminiature female receptacle for analog interface is located on the rear of the control/pump box.

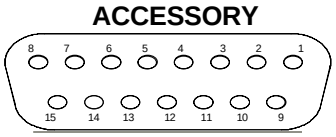

15 pin D-subminiature female receptacle

Pin #	Function
1	Chassis ground.
2	No connection.
3 - 5	No connection.
6	Analog Ground. The analog ground is physically separated from the power ground throughout the unit. To prevent offsets that result from ground currents, the analog and power grounds are only connected at the unit's power supply. Analog ground should only be used as a reference pin .
7	Temperature Out. The fluid temperature, as measured by the controller's sensor located in the reservoir, can be read at this pin. The temperature scale is 10mV/°C, referenced to analog ground, pin 6 (example: +150mV = +15.0°C).
8	No connection.
9	Power Ground (5V RTN).
10 - 13	No connection.
14	+5V. Power supply of +5VDC (15mA maximum).
15	Setpoint In. The temperature setpoint can be controlled by applying a known voltage to this pin. The temperature scale is 10mV/°C, referenced to analog ground, pin 6 (example: +230mV = +23.0°C). **Note**: The setpoint is updated only when the voltage represents a temperature within the setpoint limits.

The analog setpoint signal (Setpoint In) is enabled using the unit's software. Using the Setup Loop discussed on pages 10 - 12, keep depressing the NEXT ENTER key until SP is displayed. Use the YES or NO key to display the desired mode, AnA for analog or LoC for local, then press NEXT ENTER twice to continue with the loop. **NOTE:** The last value entered is maintained when SP is changed from AnA to LOC or LOC to AnA. Store the changes.

Section V Maintenance & Troubleshooting

Service Contracts

Service Contracts are designed to provide extended life and minimal down-time for your unit. For more information, contact our Service Department.

Cleaning

Periodically inspect the reservoir. If cleaning is necessary, flush the reservoir with a cleaning fluid compatible with both the circulating system (if applicable) and the cooling fluid. **Do not use steel wool; its too abrasive and will lead to rusting.** Dry the bath using a soft cloth.

Also, cooling fluid should be replaced periodically when operating at low temperatures. Moisture concentration in cooling fluid will increase with time leading to a build up of ice on the cooling coil.

Raise the temperature of the bath to deice the cooling coil. Shut the unit off, and replace the cooling fluid.

Periodic vacuuming of the condenser fins is necessary. The frequency of cleaning depends on the operating environment. It is recommended that a visual inspection of the condenser be made monthly after initial installation. After several months, the frequency of cleaning will be established.

Rust

Stainless steel will rust if not properly used and maintained. Any damage, such as scratching or pitting, can cause rusting. The stainless steel parts exposed to bath fluids should be thoroughly cleaned periodically.

Checklist

Unit Will Not Start

Check High Temperature/Low Level cutout (see Section IV, High Temp/Low Level Cutout).

Check all circuit breakers.

Check power source for correct voltage output.

Check line cord wiring (see Section III, Electrical Requirements).

Loss of Cooling Capacity

Check cooling capacity specifications (see Section II, Specifications).

Check temperature setpoint.

Check to ensure that external heat load has not overcome the cooling capacity at the desired working temperature.

If the unit start and no cooling occurs, listen for a clicking sound from the inside of the unit. The clicking is an indication of compressor short-cycling. Check the following for causes of compressor short-cycling:

If the unit is shut off for any reason, allow the unit to remain off for approximately ten minutes before attempting to restart. The refrigeration compressor will short-cycle if time is not allotted for the equalization of refrigerant pressures.

Standard units are not designed for high temperature applications. If the cooling coils are subjected to temperatures above the maximum high temperature for the unit, compressor short-cycling will occur.

For high-temperature units the refrigeration automatically shuts down above 35°C. The light in the switch will also extinguish.

If the power source is 10% below the unit’s voltage requirements, the compressor will short-cycle. Check power source for correct voltage output.

When operating below 8°C, a non-freezing solution must be added to the bath fluid. At low temperature, a higher concentration of the non-freezing solution is required to prevent ice build up on the unit’s cooling coil. This ice build up will act as insulation and reduce the unit's cooling capacity. Raise the temperature of the bath to deice the cooling coil and increase the concentration of the non-freezing solution. Also, the bath fluid should be replaced periodically when operating at low temperatures. Moisture concentration in the bath fluid will increase with time leading to ice buildup.

Unit Will Not Heat

Check the temperature setpoint to be certain that it is at your desired temperature (see Section IV, Operator's Loop).

Check the unit configuration in the controller's Setup Loop.

Continued on next page.

No Temperature Control
If recirculating to an external system, do not overcome the cooling capacity of the unit. When the unit's cooling capacity is overcome, a loss of temperature control will result.

No External Circulation
On ULT-80s, make certain adjustable Flow Control is open (turn counterclockwise).

Check for plug in external system line.

Recirculation will cease when pump head pressure is exceeded. Review pump specifications (see Section II, Specifications).

No serial communications
All units are tested for serial communications before they leave the factory. Ensure the REMOTE indicator on the controller is illuminated.

Check all communications commands, they *must be exact*. See Appendix A.

Check communications settings. The protocol uses an RS-232 serial interface with the parameters: 9600 baud, 8 data bits, 1 stop bit and no parity.

Check all wiring for proper connections or possible shorts.

Software to verify serial communication is available from Thermo NESLAB.

Service Assistance

If, after following these troubleshooting steps, your unit fails to operate properly, contact our Service Department for assistance (see Preface, After-sale Support). *Before calling* please obtain the following information:

Part number

Serial number

Voltage of power source

Software version, see page 21

Technical Support

Our Service Department can provide you with a complete list of spare parts for your unit (see Preface, After-sale Support). *Before calling,* please obtain the following information:

Part number

Serial number

ULT-95 Rear View

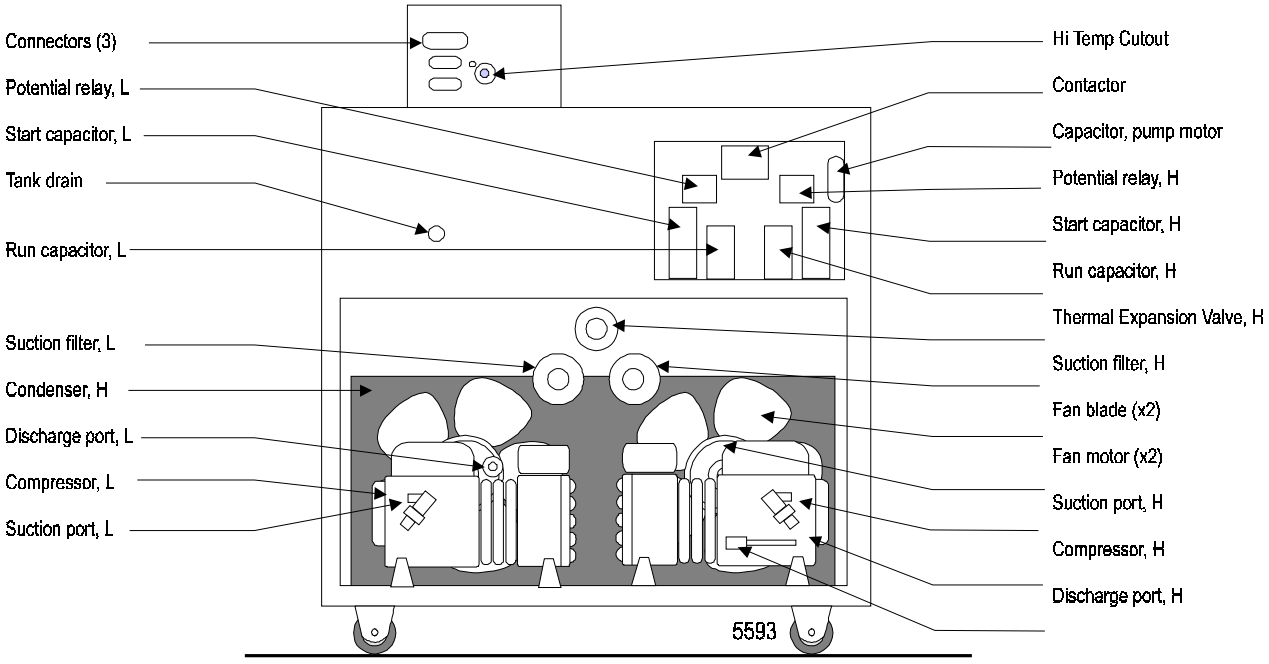

L = Low stage
H = High stage

ULT-95 Left Side View

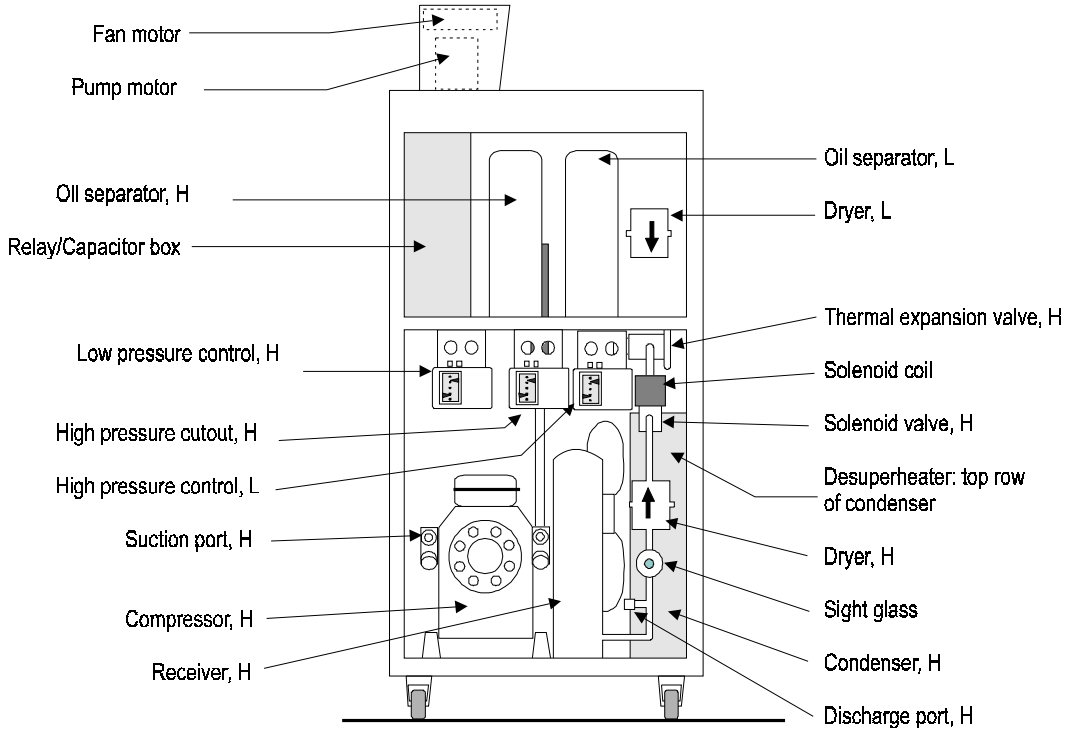

L = Low stage
H = High stage

ULT-80 Left SideView

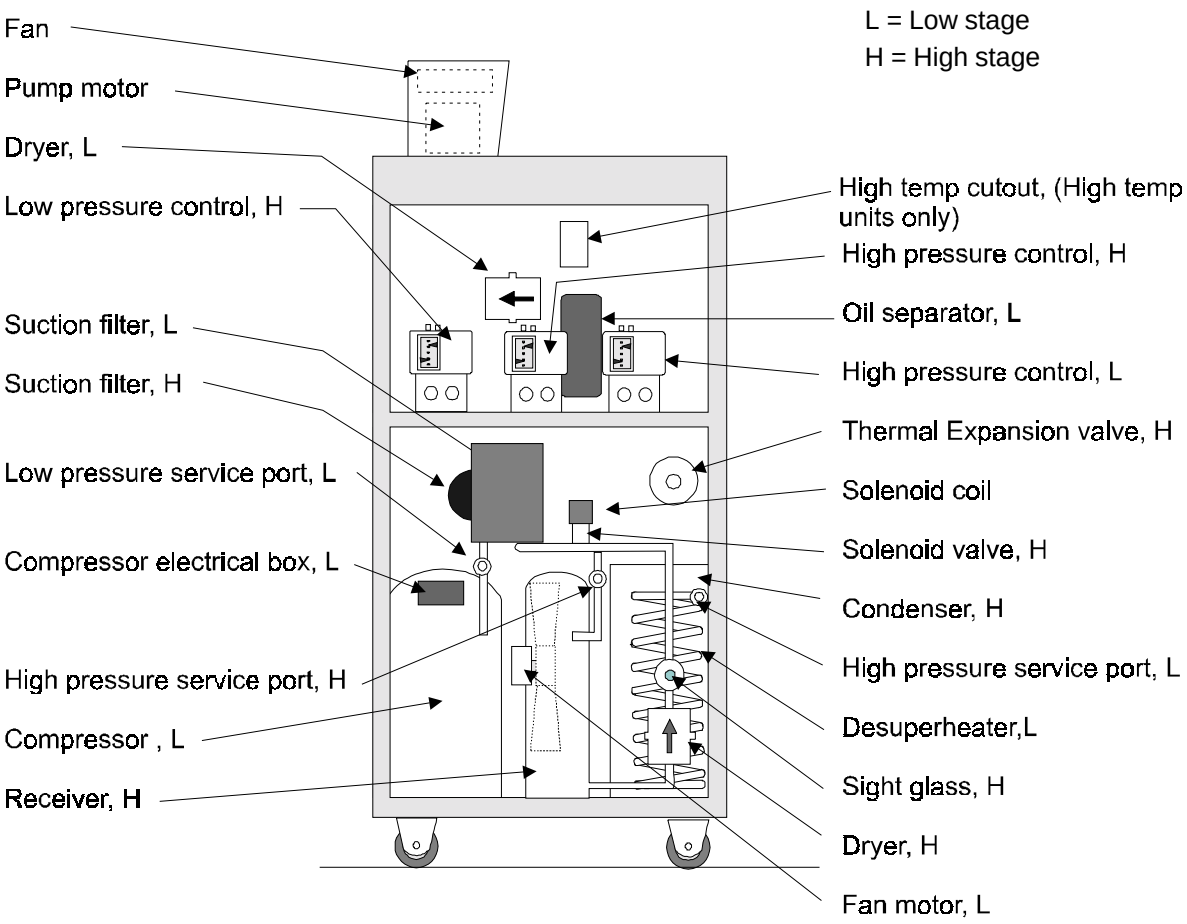

ULT-80 Right Side View

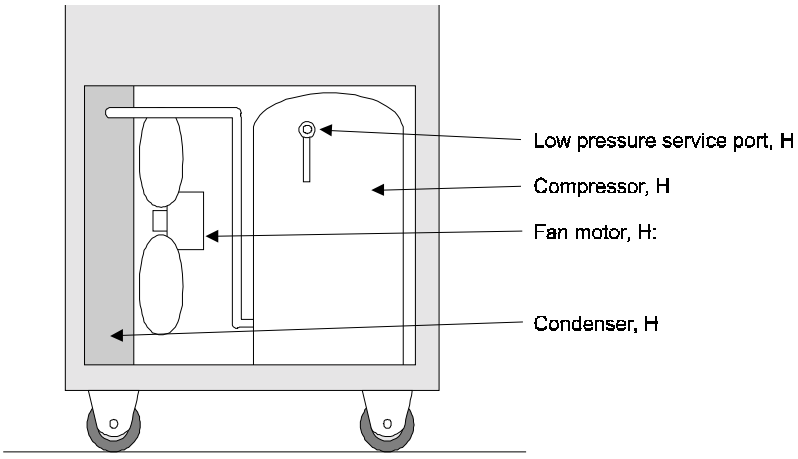

Additional Loops

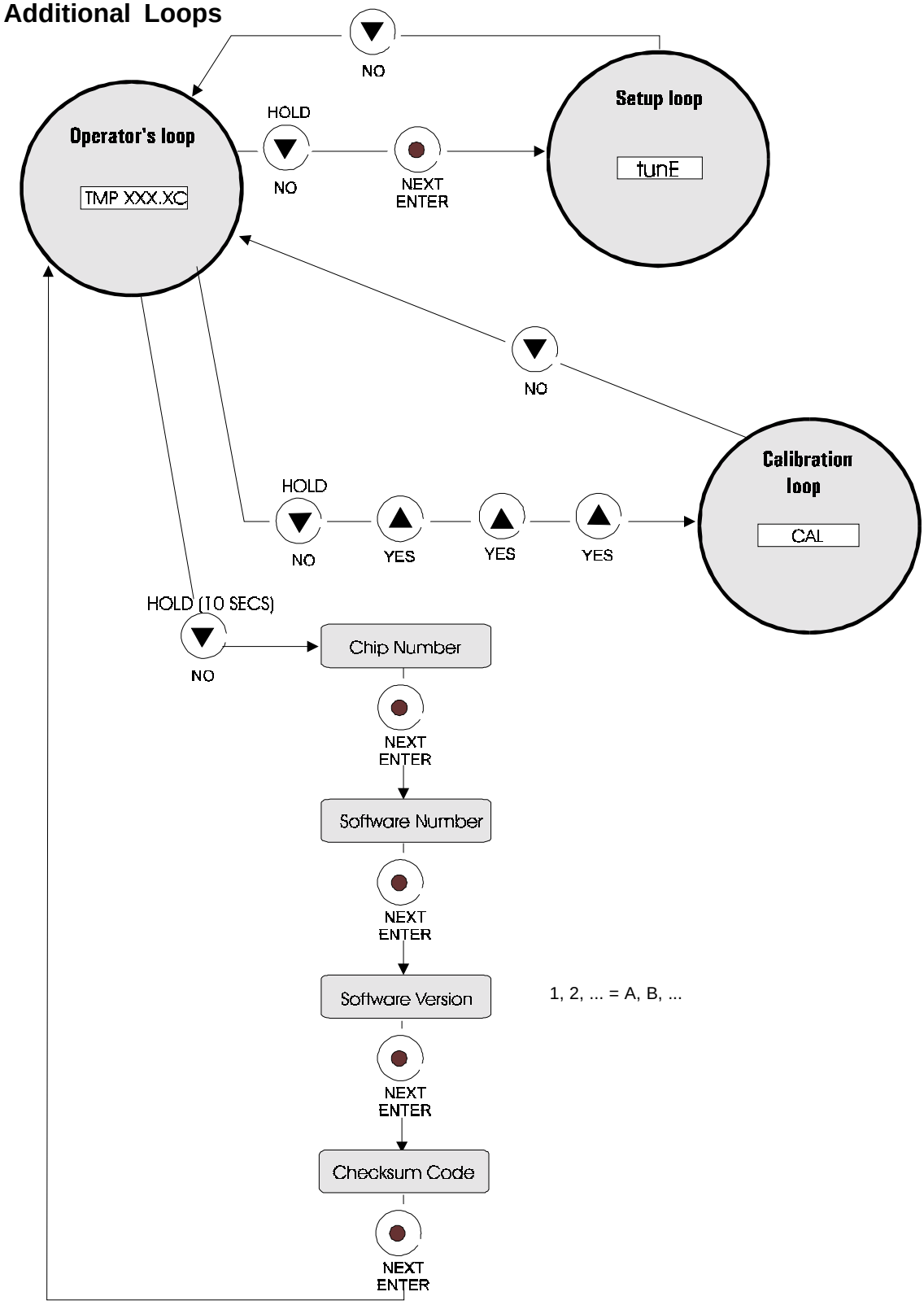

Figure 3 Changing Loops

Calibration Loop

The Calibration Loop is used to calibrate the RTD high and low temperature. The controller's internal temperature sensor is factory calibrated. We recommend calibrating any external sensor.

Enter the Calibration Loop from the Operator's Loop by pressing and holding the NO key while pressing the YES key three times.

Calibration Procedure

Install a calibrated reference thermometer in the bath. (For external mode, also install the sensor in the bath.) Place the cover on the unit.

The procedure uses the Operator's, Setup and Calibration Loops. In the Setup Loop place the unit in either the internal or remote RTD mode of operation (RTD1 = Internal , RTD2 = External). Return to the Operator's Loop and adjust the setpoint to an appropriate high-end temperature.

NOTE: When calibrating the external sensor ensure the controller's SENSOR indicator is illuminated.

Once the bath reaches the setpoint and stabilizes, go to the Calibration Loop and, as illustrated on the next page, enter the actual reference thermometer reading at either the r1H or r2H prompt.

Store the change and return to the Operator's Loop. Adjust the setpoint to an appropriate low-end temperature. Once the bath reaches the setpoint and stabilizes, return to the Calibration Loop and enter the reference thermometer reading at either the r1L or r2L prompt. Store the change.



Do not pick points that are outside the safe operating limits of the unit and the fluid in your application.

Analog In calibration is done by applying a 10.000Vdc signal for AiH, and a 0.000Vdc signal for AiL. Reference the appropriate pins on the ACCESSORY connector.

Analog Out calibration is done by measuring the appropriate pins on the ACCESSORY connector. Adjust the AoH to 1.000Vdc using the YES and NO keys then press ENTER twice. Adjust the AoL to 0.000Vdc using the YES and NO keys then press ENTER twice.

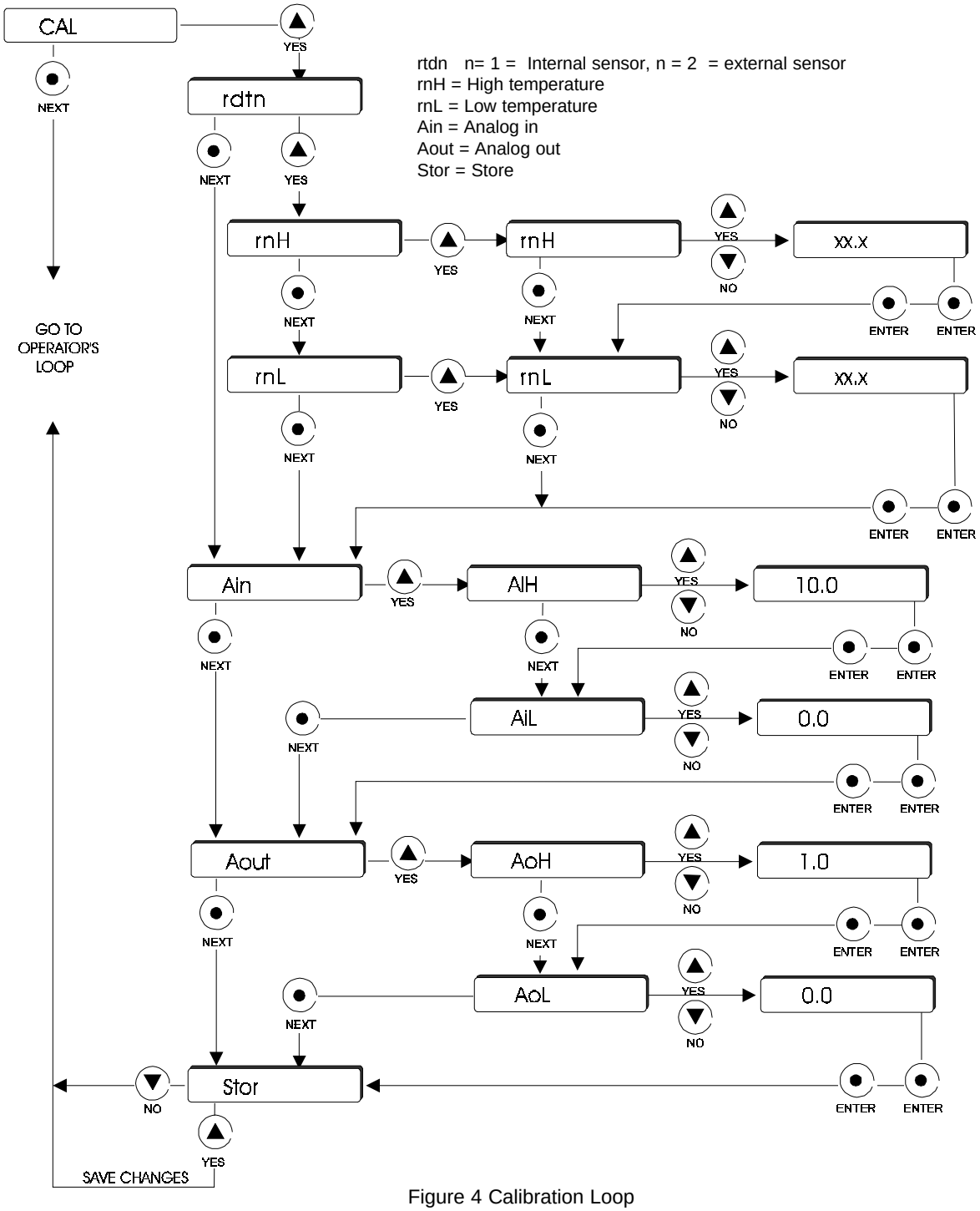

Figure 4 Calibration Loop

NOTE: To stor *all* changes, when the display reads **Stor** press **YES**. Should you desire to return to the temperature display and abort *all* changes, when the display reads **Stor** press **NO.**

Blank page.

Appendix A Serial Communications Protocol

NOTE: This appendix assumes you have a basic understanding of communications protocols.

All data is sent and received in binary form, do not use ASCII. In the following pages the binary data is represented in hexadecimal (hex) format.

The Thermo NESLAB Serial Communications Protocol, NC, is based on a master-slave model. The master is a host computer, while the slave is the bath's controller. Only the master can initiate a communications transaction (half-duplex). The slave ends the transaction by responding to the master's query. The protocol uses an RS-232 serial interface with the default parameters: 9600 baud, 1 start bit, 8 data bits, 1 stop bit and no parity.

NOTE: Before the unit will communicate, RS-232 must be turned on in the controller's Setup Loop.

The unit can be controlled through your computer's serial port by using a standard 9-pin RS-232 connection on the rear of the temperature controller. Data transmit of the serial port connects to data read (pin 2) of the bath. Data read of the serial port connects to the data transmit (pin 3) of the bath.

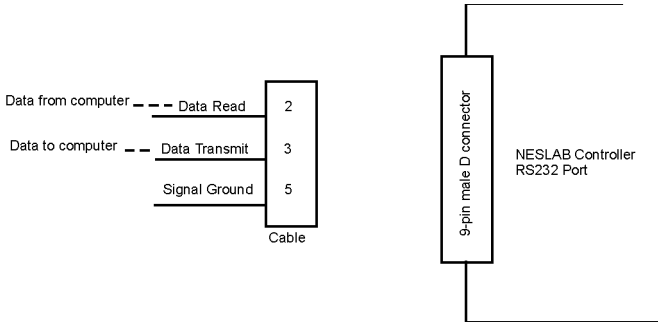

Communication cables are available. Contact our sales department for additional information.

All commands must be entered in the exact format shown in the tables on the following pages. Table 1 shows all commands available, their format and responses. Controller responses are either the requested data or an error message. The controller response *must* be received before sending the next command.

The host sends a command embedded in a single communications packet, then waits for the controller's response. If the command is not understood or the checksums do not agree, the controller responds with an error command. Otherwise, the controller responds with the requested data. If the controller fails to respond within 1 second, the host should re-send the command.

NC Serial Communications Protocol

NOTE: All byte values are shown in hex, hex represents the binary values that must be sent to the bath. **Do not use ASCII.**

The framing of the communications packet in both directions is:

	Checksum region						
Lead char CA	Addr-MSB 00	Addr-LSB 01	Command	n d-bytes	d-byte 1 …	d-byte n	Checksum

Lead char	CA (hex).
	Device address is 1
Addr-msb	Most significant byte of device address is 00 hex.
Addr-lsb	Least significant byte of device address is 01 hex.
Command	Command byte (see Table 1).
n d-bytes	Number of data bytes to follow (00 to 03 hex).
d-byte 1	1st data byte (the qualifier byte is considered a data byte).
...	...
d-byte n	nth data byte.
Checksum	Bitwise inversion of the 1 byte sum of bytes beginning with the most significant address byte and ending with the byte preceding the checksum. (To perform a bitwise inversion, "exclusive OR" the one byte sum with FF hex.)

The master requests information by sending one of the Read Functions as shown in Table 1. Since no data is sent to the bath during a read request, the master uses 00 for the number of data bytes following the command byte.

The bath will respond to a Read Function by echoing the lead character, address, and command byte, followed by the requested data and checksum. When the bath sends data, a qualifier byte is sent first, followed by a two byte signed integer (16 bit, MSB sent first). The qualifier byte indicates the precision and units of measure for the requested data as detailed in Table 2.

As an example, the master requests to read internal temperature by sending:

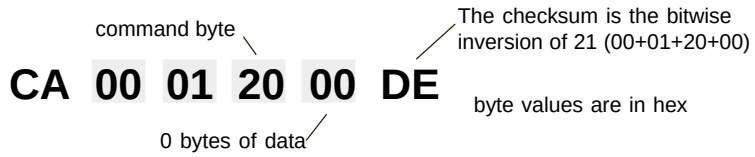

If the temperature is -10.5°C, the slave would reply:

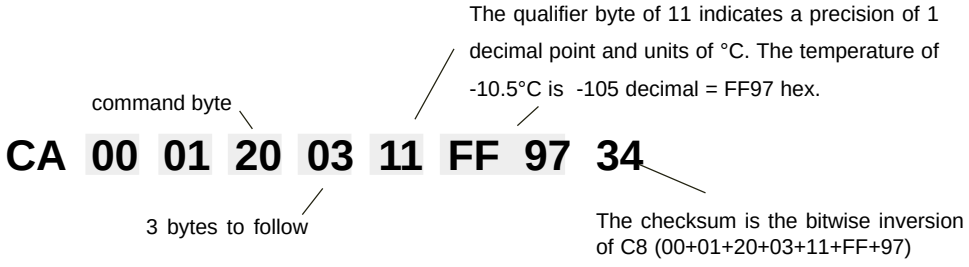

The master sets parameters in the bath by sending one of the Set Functions as shown in Table 1. The master does not send a qualifier byte in the data field. The master should be preprogrammed to send the correct precision and units (it could also read the parameter of interest first to decode the correct precision and units needed).

For example, if the master wants to set the setpoint to 30°C, it would send :

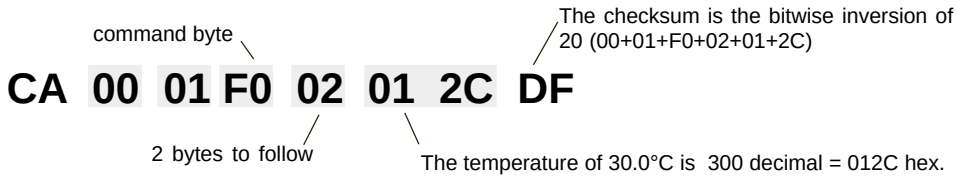

The slave responds:

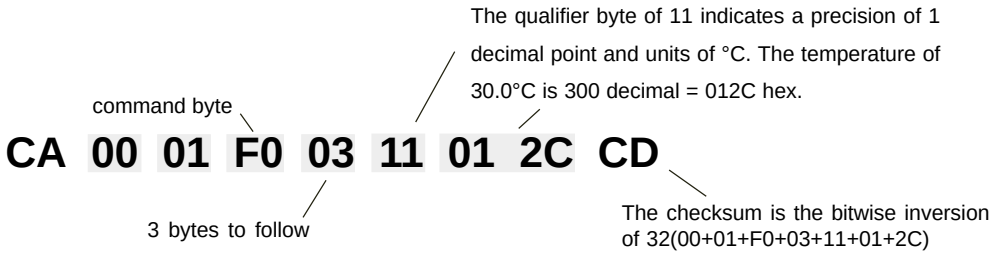

Table 1 (All bytes are in hex)

FUNCTION	MASTER SENDS	BATH RESPONDS
READ		
Read Internal Temperature	CA 00 01 **20** 00 DE	CA 00 01 **20** 03 qb d1 d2 cs
Read External Sensor	CA 00 01 **21** 00 DD	CA 00 01 **21** 03 qb d1 d2 cs
Read Setpoint (control point)	CA 00 01 **70** 00 8E	CA 00 01 **70** 03 qb d1 d2 cs
Read Low Temperature Limit	CA 00 01 **40** 00 BE	CA 00 01 **40** 03 qb d1 d2 cs
Read High Temperature Limit	CA 00 01 **60** 00 9E	CA 00 01 **60** 03 qb d1 d2 cs
Read Proportional Band (P)	CA 00 01 **71** 00 8D	CA 00 01 **71** 03 qb d1 d2 cs
Read Integral (I)	CA 00 01 **72** 00 8C	CA 00 01 **72** 03 qb d1 d2 cs
Read Derivative (D)	CA 00 01 **73** 00 8B	CA 00 01 **73** 03 qb d1 d2 cs
SET		
Set Setpoint (control point)*	CA 00 01 **F0** 02 d1 d2 cs	CA 00 01 **F0** 03 qb d1 d2 cs
Set Low Temperature Limit*	CA 00 01 **C0** 02 d1 d2 cs	CA 00 01 **C0** 03 qb d1 d2 cs
Set High Temperature Limit*	CA 00 01 **E0** 02 d1 d2 cs	CA 00 01 **E0** 03 qb d1 d2 cs
Set Proportional Band (P=1-99.9)	CA 00 01 **F1** 02 d1 d2 cs	CA 00 01 **F1** 03 qb d1 d2 cs
Set Integral (I = 0-9.99)	CA 00 01 **F2** 02 d1 d2 cs	CA 00 01 **F2** 03 qb d1 d2 cs
Set Derivative (D= 0-5.0)	CA 00 01 **F3** 02 d1 d2 cs	CA 00 01 **F3** 03 qb d1 d2 cs
BATH ERROR RESPONSES		
Bad Command	N/A	CA 00 01 **0F** 02 01 ed cs
Bad Checksum	N/A	CA 00 01 **0F** 02 03 ed cs
MISCELLANEOUS		
Request Acknowledge	CA 00 01 **00** 00 FE	CA 00 01 **00** 02 v1 v2 cs

command bytes shown in **bold**
qb = qualifier byte
d1,d2 = 16 bit signed integer of the value being sent or received
cs = the checksum of the string (see text)
ed = echo back of the command byte as received
v1,v2 = protocol version
* = limited to the range of the bath

Table 2

QUALIFIER BYTE

10 hex	0.1 precision, no units of measure
20 hex	0.01 precision, no units of measure
11 hex	0.1 precision, °C units

Example: The temperature of 45.6 °C would be represented by the qualifier 11 hex, followed by the 2 bytes 01 C8 hex (456 decimal).

Appendix B Programming Software

NEScom Software

The Thermo NESLAB Communications Software is a user friendly software that allows you to automate your temperature control process. The software includes a 3½" disk, comprehensive operator's manual and a toll-free number to a trained technical staff.

NEScom Software allows you to write custom temperature programs for our Digital or Microprocessor based temperature control apparatus. Choose upper or lower temperature limits and monitor system status with an alarm. NEScom can also record your results on a user selectable graph. NesCom must be used with an IBM or 100% compatible computer.

Select from easy to use product icons.

Create graphs and charts.

Easily configure ramping functions which set the setpoint over time.

View pop-up alarm windows which display if an alarm condition occurred.

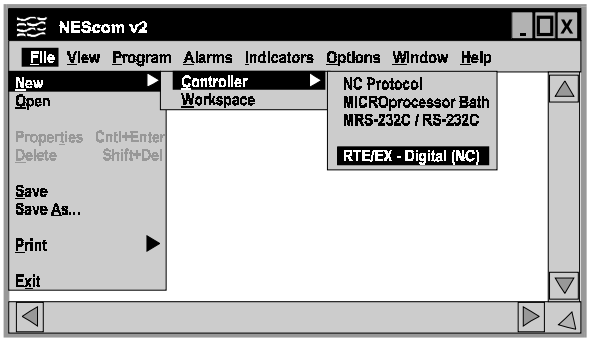

Select software functions from the easy to use pulldown menus.

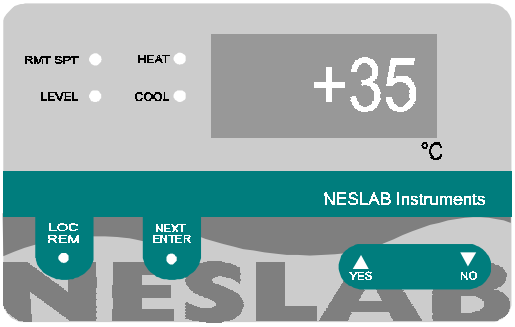

View a virtual controller screen which allows remote monitoring and operation of product control panel.

WARRANTY

Thermo NESLAB Instruments, Inc. warrants for 12 months from date of shipment any Thermo NESLAB unit according to the following terms.

Any part of the unit manufactured or supplied by Thermo NESLAB and found in the reasonable judgment of Thermo NESLAB to be defective in material or workmanship will be repaired at an authorized Thermo NESLAB Repair Depot without charge for parts or labor. The unit, including any defective part must be returned to an authorized Thermo NESLAB Repair Depot within the warranty period. The expense of returning the unit to the authorized Thermo NESLAB Repair Depot for warranty service will be paid for by the buyer. Thermo NESLAB's responsibility in respect to warranty claims is limited to performing the required repairs or replacements, and no claim of breach of warranty shall be cause for cancellation or recision of the contract of sales of any unit.With respect to units that qualify for field service repairs, Thermo NESLAB's responsibility is limited to the component parts necessary for the repair and the labor that is required on site to perform the repair. Any travel labor or mileage charges are the financial responsibility of the buyer.

The buyer shall be responsible for any evaluation or warranty service call (including labor charges) if no defects are found with the Thermo NESLAB product.

This warranty does not cover any unit that has been subject to misuse, neglect, or accident. This warranty does not apply to any damage to the unit that is the result of improper installation or maintenance, or to any unit that has been operated or maintained in any way contrary to the operating or maintenance instructions specified in Thermo NESLAB's Instruction and Operation Manual. This warranty does not cover any unit that has been altered or modified so as to change its intended use.

In addition, this warranty does not extend to repairs made by the use of parts, accessories, or fluids which are either incompatible with the unit or adversely affect its operation, performance, or durability.

Thermo NESLAB reserves the right to change or improve the design of any unit without assuming any obligation to modify any unit previously manufactured.

THE FOREGOING EXPRESS WARRANTY IS IN LIEU OF ALL OTHER WARRANTIES, EXPRESSED OR IMPLIED, INCLUDING BUT NOT LIMITED TO WARRANTIES OR MERCHANTABILITY AND FITNESS FOR A PARTICULAR PURPOSE.

Thermo NESLAB'S OBLIGATION UNDER THIS WARRANTY IS STRICTLY AND EXCLUSIVELY LIMITED TO THE REPAIR OR REPLACEMENT OF DEFECTIVE COMPONENT PARTS AND Thermo NESLAB DOES NOT ASSUME OR AUTHORIZE ANYONE TO ASSUME FOR IT ANY OTHER OBLIGATION.

Thermo NESLAB ASSUMES NO RESPONSIBILITY FOR INCIDENTAL, CONSEQUENTIAL, OR OTHER DAMAGES INCLUDING, BUT NOT LIMITED TO LOSS OR DAMAGE TO PROPERTY, LOSS OF PROFITS OR REVENUE, LOSS OF THE UNIT, LOSS OF TIME, OR INCONVENIENCE.

This warranty applies to units sold in the United States. Any units sold elsewhere are warranted by the affiliated marketing company of Thermo NESLAB Instruments, Inc. This warranty and all matters arising pursuant to it shall be governed by the law of the State of New Hampshire, United States. All legal actions brought in relation hereto shall be filed in the appropriate state or federal courts in New Hampshire, unless waived by Thermo NESLAB.